REQUEST FOR PROPOSALS:

Sports Surfacing & Related Solutions

RFP #:

COG-2164

ISSUED BY:

The Cooperative Council of Governments

On Behalf of Equalis Group

6001 Cochran Road, Suite 333

Cleveland, Ohio 44139

DATED:

March 7, 2025

SECTION TWO:

Proposal Submission Documents, Technical Proposal, Cost Proposal and Other Required Forms

TABLE OF CONTENTS

PROPOSAL FORM CHECKLIST 3
PROPOSAL FORM 1: TECHNICAL PROPOSAL 4
PROPOSAL FORM 2: COST PROPOSAL 111
PROPOSAL FORM 3: DIVERSITY VENDOR CERTIFICATION PARTICIPATION 112
PROPOSAL FORM 4: CERTIFICATIONS AND LICENSES 113
PROPOSAL FORM 5: UNRESOLVED FINDINGS FOR RECOVERY 114
PROPOSAL FORM 6: MANDATORY DISCLOSURES 115
PROPOSAL FORM 7: DEALER, RESELLER, AND DISTRIBUTOR AUTHORIZATION 116
PROPOSAL FORM 8: MANDATORY SUPPLIER & PROPOSAL CERTIFICATIONS 117
PROPOSAL FORM 9: CLEAN AIR ACT & CLEAN WATER ACT 118
PROPOSAL FORM 10: DEBARMENT NOTICE 119
PROPOSAL FORM 11: LOBBYING CERTIFICATIONS 120
PROPOSAL FORM 12: CONTRACTOR CERTIFICATION REQUIREMENTS 121
PROPOSAL FORM 13: BOYCOTT CERTIFICATION 122
PROPOSAL FORM 14: FEDERAL FUNDS CERTIFICATION FORMS 123
PROPOSAL FORM 15: FEMA FUNDING REQUIREMENTS CERTIFICATION FORMS 128
PROPOSAL FORM 16: ARIZONA CONTRACTOR REQUIREMENTS 131
PROPOSAL FORM 17: NEW JERSEY REQUIREMENTS 133
PROPOSAL FORM 18: GENERAL TERMS AND CONDITIONS ACCEPTANCE FORM 144
PROPOSAL FORM 19: EQUALIS GROUP ADMINISTRATION AGREEMENT DECLARATION 145
PROPOSAL FORM 20: MASTER AGREEMENT SIGNATURE FORM 146

PROPOSAL FORM CHECKLIST

The following documents must be submitted with the Proposal

The below documents can be found in Section 2; Proposal Submission and Required Forms and must be submitted with the proposal. Please note Proposal Form 2 is a separate attachment (attachment B).

TECHNICAL PROPOSAL

- ☒ **Proposal Form 1: Technical Proposal**

PROPOSAL PRICING: Attachment B is provided separately in a Microsoft Excel file and is required to complete your cost proposal.

- ☒ **Proposal Form 2: Cost Proposal**

OTHER REQUIRED PROPOSAL FORMS:

- ☒ **Proposal Form 3: Diversity Vendor Certification Participation**
- ☒ **Proposal Form 4: Certifications and Licenses**
- ☒ **Proposal Form 5: Unresolved Findings for Recovery**
- ☒ **Proposal Form 6: Mandatory Disclosures**
- ☒ **Proposal Form 7: Dealer, Reseller, and Distributor Authorization**
- ☒ **Proposal Form 8: Mandatory Supplier & Proposal Certifications**
- ☒ **Proposal From 9: Clean Air Act & Clean Water Act**
- ☒ **Proposal From 10: Debarment Notice**
- ☒ **Proposal Form 11: Lobbying Certification**
- ☒ **Proposal Form 12: Contractor Certification Requirements**
- ☒ **Proposal Form 13: Boycott Certification**
- ☒ **Proposal Form 14 Federal Funds Certification Form**
- ☒ **Proposal Form 15 FEMA Funding Requirements Certification Form**
- ☒ **Proposal Form 16: Arizona Contractor Requirements**
- ☒ **Proposal Form 17: New Jersey Requirements**
- ☒ **Proposal Form 18: General Terms and Conditions Acceptance Form**
- ☒ **Proposal Form 19: Equalis Group Administration Agreement Declaration**
- ☒ **Proposal Form 20: Master Agreement Signature Form**

(The rest of this page is intentionally left blank)

PROPOSAL FORM 1: TECHNICAL PROPOSAL

1. OVERVIEW & QUALIFICATIONS	
1.1. Company Information	
1.1.1. ***Company Name***:	FieldTurf USA, Inc.
1.1.2. ***Corporate Street Address***:	175 N Industrial Blvd NE, Calhoun, GA 30701
1.1.3. ***Website***:	www.fieldturf.com / https://smartbuycooperative.com / https://tarkettsports.com / https://www.tarkettsportsindoor.com / https://beynonsports.com /
1.1.4. ***Formation***. In what year was the company formed? For how long has your company been operating under its present business name? If your company has changed its business name, include the most recent prior business name and the year of the name change.	**FieldTurf USA, Inc.** Year formed: 1996 as FieldTurf International, Inc. Year name changed: 2004 to FieldTurf USA, Inc. **About Beynon Sports Surfaces (Running Tracks):** Over 40 years ago, our founder, John T. Beynon, set out to revolutionize the sport surfacing industry. Since then, we have over 2500 installations worldwide and built an industry leading reputation for unmatched quality, durability, performance and most importantly, service. Beynon surfaces are found in North America and Canada's most prestigious track and field facilities, reputed collegiate campuses, high schools, and city parks. **FieldTurf USA, Inc and Beynon Sports are both owned by Tarkett Group.** **THE RIGHT PARTNER FOR YOUR ORGANIZATION** **ONE COMPANY FOR ALL YOUR NEEDS** Tarkett Sports is a division of the Tarkett Group, which has been in operation since 1872. The Tarkett Sports brands include: FieldTurf, Beynon Sports, Renner Sports, Tarkett Sports Construction, Tarkett Sports Indoor, FieldTurf Landscape, and GrassMaster. These iconic brands provide clients with a complete array of sports surfacing options – from artificial turf to high performance running tracks and a full complement of indoor surfacing. FieldTurf | BEYNON | renner | Tarkett SPORTS CONSTRUCTION | Tarkett SPORTS INDOOR | FieldTurf LANDSCAPE | GRASSMASTER **About Tarkett:** **About Tarkett** With over 140 years of history, Tarkett is a world leader in innovative and sustainable solutions for flooring and sports surfaces, with sales of €3.3 in 2024. The Group employs almost 12,000 people and has 24 R&D centres, 8 recycling centres and 35 production sites. Tarkett designs and manufactures solutions for hospitals, schools, homes, hotels, offices, shops and sports fields, serving customers in more than 100 countries. To build "The Way to Better Floors", the Group is committed to the circular economy and sustainable development, in line with its Tarkett Human-Conscious Design® approach. Tarkett is listed on the Euronext regulated market (compartment B, ISIN code FR0004188670, mnemonic code: TKTT). www.tarkett-group.com

1.1.5. ***Primary Point of Contact***. Provide information about the Respondent representative/contact person authorized to answer questions regarding the proposal submitted by your company:	Name:	Sarah Morehead
	Title:	Director of Operations – SmartBuy
	Phone:	503-267-0165
	E-Mail Address:	sarah.morehead@fieldturf.com
1.1.6. ***Authorized Representative***. Print or type the name of the Respondent representative authorized to address contractual issues, including the authority to execute a contract on behalf of Respondent, and to whom legal notices regarding contract termination or breach, should be sent (if not the same individual as in 1.1.9., provide the following information on each such representative and specify their function).	Name:	Darren Gill
	Title:	FieldTurf Executive Vice-President
	Phone:	Cell: (514) 862-4094 T: (514) 375-2584
	E-Mail Address:	dgill@fieldturf.com 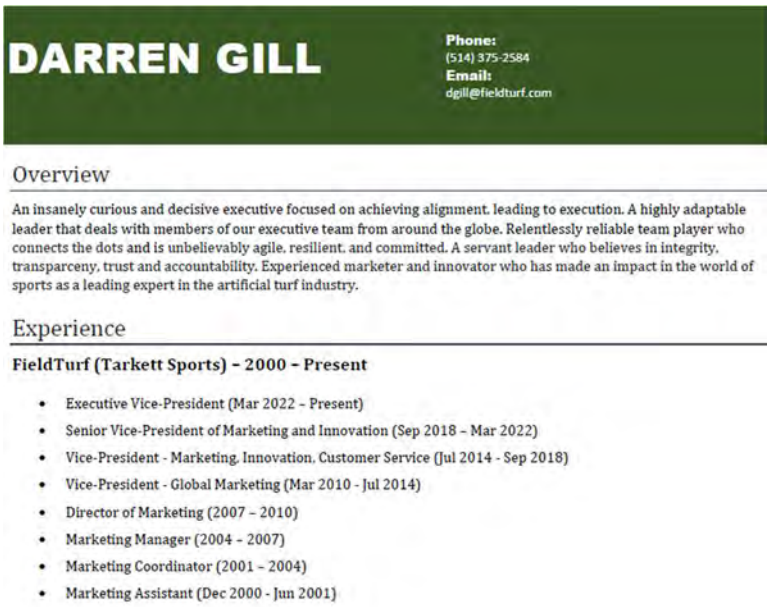 DARREN GILL Phone: (514) 375-2584 Email: dgill@fieldturf.com Overview An insanely curious and decisive executive focused on achieving alignment, leading to execution. A highly adaptable leader that deals with members of our executive team from around the globe. Relentlessly reliable team player who connects the dots and is unbelievably agile, resilient, and committed. A servant leader who believes in integrity, transparceny, trust and accountability. Experienced marketer and innovator who has made an impact in the world of sports as a leading expert in the artificial turf industry. Experience FieldTurf (Tarkett Sports) – 2000 – Present • Executive Vice-President (Mar 2022 – Present) • Senior Vice-President of Marketing and Innovation (Sep 2018 – Mar 2022) • Vice-President - Marketing, Innovation, Customer Service (Jul 2014 - Sep 2018) • Vice-President - Global Marketing (Mar 2010 - Jul 2014) • Director of Marketing (2007 – 2010) • Marketing Manager (2004 – 2007) • Marketing Coordinator (2001 – 2004) • Marketing Assistant (Dec 2000 - Jun 2001)
1.2. Financial Strength & Legal Considerations		
1.2.1. ***Financial Strength***. Demonstrate your financial strength and	FieldTurf and Beynon Sports are part of the Tarkett Group. Tarkett is a global leader in innovative and sustainable solutions for flooring and sports surfaces. With a wide range of products including vinyl, linoleum, carpet, rubber, wood & laminate, synthetic turf and athletics track, the Group serves customers in more than 100 countries worldwide.	

stability with meaningful data.

This could include, but is not limited to, such items as financial statements, SEC filings, credit & bond ratings, letters of credit, and detailed refence letters.

Note: If the information disclosed in your response is considered "Trade Secret" as defined in Ohio Revised Code, Respondents may mark the information as a "Trade Secret" and the response will be redacted from any future use of the RFP response.

About Tarkett

With over 140 years of history, Tarkett is a world leader in innovative and sustainable solutions for flooring and sports surfaces, with sales of €3.3 in 2024. The Group employs almost 12,000 people and has 24 R&D centres, 8 recycling centres and 35 production sites. Tarkett designs and manufactures solutions for hospitals, schools, homes, hotels, offices, shops and sports fields, serving customers in more than 100 countries. To build 'The Way to Better Floors', the Group is committed to the circular economy and sustainable development, in line with its Tarkett Human-Conscious Design® approach. Tarkett is listed on the Euronext regulated market (compartment B, ISIN code FR0004188670, mnemonic code: TKTT). www.tarkett-group.com

FieldTurf has been operating continuously for over 30 years. Our history as the inventor of infilled artificial turf is well documented, but what's important is that we've spent the necessary investment in innovation to stay ahead of the competition.

We are more than capable of handling a project of this magnitude.

Sales in the **Sport** segment rose by +3.7% compared to 2023, including +2.4% organic growth, to reach €1,063 million at the end of 2024, a slower pace after particularly strong growth in the previous two years. Demand for artificial turf fields and athletics tracks in North America remains at a high level, but the market has grown at a more moderate pace.

Adjusted EBITDA for the Sport segment rose to €134 million, or 12.6% of sales, compared to €112 million, or 11.0% of sales, in 2023. This improvement is the result of a positive inflation balance thanks to good selling prices and favorable raw material prices, as well as the impact of the new acquisition in the sports field construction business (scope effect of +€5 million).

Tarkett

Press release

Tarkett Group

Annual results 2024:

Slight organic decline in sales in a persistently difficult market

Growth in adjusted EBITDA and margin

Strong generation of free cash flow and reduction in debt leverage compared with December 2023

Impairment of assets in the CIS and EMEA Wood segments

Results for 2024

- **Revenue for 2024 was slightly down compared to 2023 (-0.9%, or -0.4% at constant scope and exchange rates), reflecting the continuing slowdown in demand for flooring, particularly in EMEA and the CIS.**
- **Revenue in Q4 2024 was stable compared with 2023 (+0.1%, or -0.1% at constant exchange rates and scope of consolidation), with lower activity in Sport offset by favorable volumes in EMEA and North America.**
- **Significant improvement in adjusted EBITDA: €329 million (9.9% of sales), an increase of +€42 million (+1.3 pts) compared to 2023**
- **Adjusted EBIT: €191 million (+€37 million compared to 2023)**
- **Net profit (Group share) of -€62.6 million, due to asset impairments of €111 million (non-cash charges), mainly in the CIS and in the Wood segment in EMEA. Excluding the impact of these impairments, net profit for the period would have been €49.0 million, up from +€20.5 million in 2023.**
- **Free cash flow of €149 million thanks to good operating performance and effective management of working capital requirements.**
- **Net financial debt of €435 million, down by €117 million compared to 2023, resulting in a financial leverage of 1.3x adjusted EBITDA at the end of December 2024.**
- **Selective acquisitions in Sport of Benchmark, PCC (end 2024), and Mid-Atlantic (January 2025), US-based companies specialized in the construction of sports fields and athletics tracks.**
- **In February 2025, Tarkett obtained an A rating from CDP (Carbon Disclosure Project), the highest score, confirming its leadership among flooring and sports surface manufacturers in terms of climate action.**

Paris, 20 February 2025: The Supervisory Board of Tarkett (Euronext Paris: FR0004188670 TKTT), which met today, reviewed the Group's consolidated results for the 2024 financial year.

The Group uses alternative performance indicators (not defined by IFRS) described in detail in Appendix 1 on page 6 this document:

In millions of euros	2024	2023	% change
Revenue *Of which organic growth*	**3 331. 9** *-0.4%*	**3 363.1** *+4.5%*	**-0.9%**
Adjusted EBITDA *% of revenue*	**329.3** *9.9%*	**287.8** *8.6%*	**+14.4%**
Adjusted operating profit (EBIT) *% of revenue*	**190.8** *5.7%*	**154.1** *4.6%*	**+23.8%**
Adjustments to EBIT *Of which impairment of assets*	**(154.6)** *(111.0)*	**(29.0)** -	
Operating profit (EBIT) *% of revenue*	**36.2** *1.1%*	**125.1** *3.7%*	**-71.1%**
Net financial expenses	**(62.3)**	**(69.2)**	-
Net profit for the period restated for impairment of assets	**49.0**	**20.5**	-
Net profit attributable to company shareholders *Diluted earnings per share (€)*	**(62.6)** *-0.95*	**20.4** *+0.31*	-
Free cash flow (1)	**149.4**	**147.1**	-
Net debt *Leverage (Net debt / Adjusted EBITDA 12 months)*	**434.7** *1.3x*	**551.7** *1.9x*	-
Cash and cash equivalents	**352.4**	**224.3**	

(1) Before disposal of distribution assets in California

1. Fourth-quarter revenue by segment

Group **net revenue** amounted to €771.2 million, similar to the fourth quarter of 2023 (+0.1%). On a like-for-like basis, organic sales were slightly down (-0.1%) compared to 2023. Lower sales in Sport during the quarter were offset by higher volumes in EMEA and North America. Over the period, selling prices remained broadly stable.

Revenue in millions of euros	Q4 2024	Q4 2023	Variation	Of which organic variation
EMEA	212.6	197.7	+7.6%	+3.8%
North America	201.9	202.7	-0.4%	+2.2%
CIS. APAC & Latin America	136.9	155.0	-11.7%	-2.6%
Sport	219.8	215.1	+2.2%	-3.9%
TOTAL	**771.2**	**770.5**	***+0.1%***	***-0.1%***

2. Group results in 2024

Group **net sales** amounted to €3,332 million, down slightly by 0.9% compared to 2023 (-0.4% at constant scope and exchange rates).

Selling prices applied in 2024 are stable overall (-0.3%) compared to 2023, with only selective price reductions implemented for certain products. The decline in sales in the three flooring divisions in the first half of the year was offset in the second half by an increase in activity in EMEA and North America. In a market that remains sluggish, commercial segments (healthcare, education, etc.) are holding up better than residential segments.
The CIS, APAC and LATAM segment saw a decline in sales over the year as a whole, especially in Eastern Europe and mainly in Russia, in a context of economic slowdown, high inflation, and particularly high interest rates.
The Sport division continues to grow in 2024, but at a more moderate pace after two years of record growth

The currency effect was unfavorable over the year (-0.5%), mainly due to the depreciation of the rouble and the Brazilian real.

Revenue in millions of euros	2024	2023	Variation	Of which organic variation
EMEA	866.0	850.2	+1.9%	-1.6%
North America	866.9	889.2	-2.5%	-0.5%
CIS. APAC & Latin America	535.8	598.5	-10.5%	-3.2%
Sport	1 063.2	1 025.2	+3.7%	+2.4%
Total Group	**3 331.9**	**3 363.1**	**-0.9%**	**-0.4%**

Adjusted EBITDA was €329.3 million, or 9.9% of sales, compared to €287.8 million in 2023, or 8.6% of sales.

The combined effect of volumes and product mix on EBITDA was +€4 million.

Selective adjustments to selling prices (-0.3% compared to 2023) led to an effect of -€8 million euros (excluding changes in selling prices in the CIS, adjusted to offset currency effects).

Lower raw materials costs, mainly in the first half, generated a positive full-year effect of +€43 million, but wage inflation remained significant (-€30 million).

The balance of inflation (net of the effect of sales prices and cost inflation, i.e. purchase prices and salaries) was slightly positive (+€5 million) over the year.

EBITDA and margins benefited from the Group's good industrial performance and productivity initiatives, which led to significant reduction in production costs of €27 million over the year.

SG&A savings generated by the cost-cutting plans implemented during the year in the support functions at headquarters and in EMEA offset efforts to support growth in Sport and the launch of new collections in flooring.

Changes in the scope of consolidation in Sport and North America divisions also had a net positive effect of +€4 million. They include the impact of the asset disposals of the distribution subsidiary Diamond W in California (July 2024) and the acquisition of Classic Turf in Connecticut (July 2024).

The impact of currencies outside the CIS is neutral compared to 2023. In the CIS, the net effect of prices and currencies ("lag effect") is also neutral: the devaluation of the rouble has been offset by price increases.

The adjusted EBITDA margin is up over the year (9.9% of sales compared with 8.6% in 2023).

Adjusted EBITDA in millions of euros	2024	2023	Margin 2024 (%)	Margin 2023 (%)
EMEA	75.3	61.4	*8.7%*	*7.2%*
North America	81.3	71.0	*9.4%*	*8.0%*
CIS. APAC & Latin America	67.3	79.1	*12.6%*	*13.2%*
Sports	134.3	112.5	*12.6%*	*11.0%*
Central	-28.9	-36.2	-	-
TOTAL	**329.3**	**287.8**	**9.9%**	**8.6%**

EBIT amounted to €36.2 million in 2024, down from €88.9 million in 2023. **Adjustments to EBIT** (detailed in Appendix 1) amounted to €154.6 million in 2024, compared to €29.0 million in 2023. They consist mainly of asset impairments and restructuring costs associated with the implementation of cost-cutting plans and the closure of under-performing businesses.

Asset impairments are non-cash accounting charges and amount to €111 million, mainly in the CIS and EMEA Wood cash-generating units (CGUs). In Russia, the deterioration in market conditions observed in 2024 and the revision of medium-term forecasts, combined with a sharp rise in interest rates, led to a partial impairment of the value of assets held in the country. In EMEA, given the sharp slowdown in the wood market, the assets of this CGU have also been written down.

Net financial expense was -€62.3 million in 2024, compared to -€69.2 million in 2023 as a result of the reduction in net debt.
The tax charge was -€35.9 million in 2024, stable compared to the previous year (-€35.4 million).
The net profit (group share) for 2024 was a loss of -€62.6 million. Excluding the impact of asset impairment, net profit for the period would have been a profit of €49.0 million, compared with €20.5 million in 2023.

Comments by segment

The EMEA segment recorded revenue of €866 million, up +1.9% compared to 2023, including a favorable currency effect of +0.5% and a scope effect of +3.0% related to the integration of activities in Ukraine, previously part of the CIS. Organic sales were -1.6% lower than in 2023.

The difficult macroeconomic environment and high interest rates have put the brakes on new-build and renovation projects in the eurozone and Northern Europe. Against this backdrop, the flooring market, particularly in the residential sector, is in decline. To support business, selective downward price adjustments have been applied.

Adjusted EBITDA for the segment amounted to €75 million, representing 8.7% of sales, compared to €61 million (7.2% of sales) in 2023. The decline in some selling prices was more than offset by lower raw material purchasing costs than in 2023. In addition, improved industrial productivity and cost-cutting plans more than offset the rise in wages in 2024.

The North America segment posted sales of €867 million, down -2.5% compared to 2023. The currency effect was neutral (-0.1%) and the scope effect negative (-1.9%) with the disposal of our flooring distribution activities in California. Organic sales fell slightly by -0.5% in 2024.

3. Balance sheet and cash flow 2024

Working capital stood at €35 million at end-December 2024, compared to €118 million at end-December 2023, an improvement of €83 million over the year. The Group continued its efforts to control inventory levels, which stood at 77 days at end-December 2024, compared with 80 days at end-December 2023.
The Group is continuing its rigorous efforts to plan supplier payment terms effectively. In 2024, working capital requirements improved significantly thanks to the factoring program, which increased by +€30 million to €209 million at the end of December 2024.

Capital expenditure amounted to €96 million in 2024, compared to €92.9 million in 2023.

The Group recorded positive **free cash flow** of €149 million for the year, before disposal of significant assets, marking a slight improvement compared to the €147 million recorded in 2023.

Net debt was €435 million at end-December 2024, compared to €552 million at end-December 2023, a reduction of €117 million. **Debt leverage stood at 1.3x** adjusted EBITDA at end-December 2024, down sharply by -0.6x.

The Group had good **liquidity** of €784 million at the end of 2024, including the undrawn RCF at the end of December 2024 for €350 million, other confirmed and unconfirmed credit lines for €82 million and cash of €352 million.

4. Scope effects

On 26 July 2024, the Group finalized the sale of the assets of its flooring distribution subsidiary in California (Diamond W - annual sales of around €55 million).

On 3 July 2024, the Group completed the acquisition of one of its partners, Classic Turf & Tracks, a sports ground construction company specializing in post-tension concrete technology. This will enable the Group to consolidate its positions in certain states in the north-east of the United States and strengthen its range of tennis courts.
Other selective acquisitions were made in the Sports sector at the end of the second half of 2024 (Benchmark and PCC) and in January 2025 (Mid-Atlantic), specialized in the construction of sports fields and athletics tracks
The Group thus strengthened its position in North America, with these acquisitions adding the equivalent of €150 million in annual sales.

5. Outlook for 2025

The geopolitical and macroeconomic context remains uncertain, and interest rate cuts have not led to a recovery in new construction or renovation.

The European market remains sluggish in the major Eurozone countries (France, Germany, the Nordic countries), with no clear positive outlook for the medium term. The US market is underpinned by a more dynamic economy, and commercial activity has been more resilient. However, the residential market has not yet recovered, and the leading indicators show no signs of recovery in the short term.

In the CIS, the Russian market has slowed for some time, and the Group does not expect the situation to improve in the medium term.

Sport remains the most buoyant segment, driven by a market that continues to grow, albeit at a slower pace than in previous years. The Group intends to grow by reinforcing its geographical coverage in North America, and by continuing to innovate and bring complementary products to the existing portfolio. Priority is being given to integrating recently acquired companies, without excluding other targeted acquisitions.

As in 2024, the group aims to continue its development in a difficult macroeconomic environment and is targeting an Adjusted EBITDA of around 360 million euros for 2025, including the impact of acquisitions made in the Sports sector.

McGriff SURETY

February 05, 2025

Re: Fieldturf USA, Inc.

To Whom It May Concern:

Please be advised that Federal Insurance Company, a member of the Chubb Group of Insurance Companies, currently has the privilege of bonding Fieldturf USA, Inc. They are licensed and authorized to do business in all states. They have a Treasury Listing of $462,516,000 and are rated A++ (Superior) with financial size category XV by A. M. Best.

Federal Insurance Company has extended surety credit to Fieldturf USA, Inc. in an aggregate amount of $250,000,000 with a single job limit of $30,000,000. However, these numbers do not represent the largest amount the surety would consider. Fieldturf USA, Inc. is completing all current projects in a satisfactory manner.

It is our understanding that Fieldturf USA, Inc. has or will be submitting a proposal to you. We anticipate no problem in providing, should they be awarded, a 100% Performance and Payment in the full amount of the proposal. As always, the surety reserves the right to perform normal underwriting at the time of any bond request, including without limitation to, prior review and approval of relevant contract terms and conditions, bond forms, appropriate contract funding and any other underwriting considerations at the time of the request. Our consideration and issuance of bonds is a matter solely between Fieldturf USA, Inc. and ourselves, and we assume no liability to third parties or to you by the issuance of this letter.

We appreciate having the opportunity to share with you our experience with this fine company and urge you to give them every consideration. Please contact me should you have any questions regarding this valued customer.

Very truly yours,

Jeffrey M. Wilson
McGriff Insurance Services, LLC

2000 International Park Drive, Suite 600 I Birmingham, AL 35243

McGriff Insurance Services, LLC.

1.2.2. ***Bankruptcy & Insolvency.*** Describe any bankruptcy or insolvency for	Not Applicable to FieldTurf or Tarkett Group- No Bankruptcy or Insolvency has occurred.

your organization (or its predecessors, if any) or any principal of the firm in the last three (3) years.	
1.2.3. ***Litigation*.** Describe any litigation in which your company has been involved in the last three (3) years and the status of that litigation.	As with any large company engaged in multiple construction markets throughout the United States, FieldTurf USA, Inc. occasionally is a party to legal proceedings from time to time. Additional information can be provided upon request.
1.3. Industry Qualifications	
1.3.1. ***Company Identification.*** How is your organization best identified? Is it a manufacturer, distributor, dealer, reseller, or service provider?	FieldTurf USA, Inc. is a manufacturer which also sells, installs and services its products. FieldTurf is also a contractor engaged in various scopes of construction related to the installation of its products, sometimes through the involvement of subcontractors. FieldTurf, Beynon, and Tarkett Sports manufacture their own product and are vertically integrated, which means that they can distribute the product nationwide as needed for each category of response. As provided above, FieldTurf/Beynon/Tarkett Sports has representation in every state and facilities nationwide to accommodate all EQUALIS agencies and members (please see information provided for in-house workforce, sales teams, executive team, project management team). Below is information regarding FieldTurf's equipment and facilities. FieldTurf manufactures each product it offers. FieldTurf controls all aspects of the manufacturing value chain. From start to finish, we're in control of your field. EXPERT INSTALLATION- FieldTurf has some of the most experienced and knowledgeable installation crews in the industry. The success of your field is heavily dependent on the quality of your installation crew. FieldTurf ensures that our customers receive a turf system that is designed, engineered, and manufactured for their needs. **FieldTurf performs the following directly:** • Manufacture, supply and installation of turf • Design and engineering • Design assist • On-site supervision • Maintenance • Recycling of infill • Removal/disposal services • Infilling

- Sewing
- Stitching
- Gluing
- Painting
- Drafting
- Logo Design, manufacture and installation

In addition to these items, FieldTurf is one of the most vertically integrated companies in the industry with sales, manufacturing, project management, marketing and installation / construction resources capable of supporting more than 500 fields per year.

Whether the customer is interested in a football field, soccer field, baseball, softball, lacrosse, multipurpose fields, or landscaping options, FieldTurf can provide the right infill, fiber, underlayment, base construction, and design to custom fit the owner's specific needs.

FieldTurf is vertically integrated for complete control. FieldTurf controls all aspects of the manufacturing value chain. From start to finish, we are in control of your field. FieldTurf has steered a high-growth industry in the proper direction with first-class manufacturing facilities, and a carefully engineered product.

FieldTurf has brought "single source responsibility" and quality to the forefront with its manufacturing plant. FieldTurf is the first company in the synthetic industry to own and operate its own manufacturing plant.

FieldTurf is one the only artificial turf manufacturing operations in North America and Canada to have received three specific ISO certifications: ISO 9001, ISO 14001 and ISO 45001-2018 certified for leadership in quality, environment and safety management systems.

<u>FIBER PRODUCTION:</u> FieldTurf fibers are produced at Tarkett's very own facility in Germany. The quality control process at the facility includes stringent testing of the yarn properties (tensile strength, uniformity, color verification)

<u>TUFTING AND COATING:</u> Once the fiber is produced, it is ready for tufting and coating which takes place at our 500,000 square foot facility in Calhoun, Georgia, which is over 11 years old. The Calhoun facility employs over 40 employees, with hundreds of years of experience combined in the artificial turf industry.

Annual production capacity exceeds the worldwide yearly demand for artificial turf:

- Rigorous quality control and inspection
- In-house fiber manufacturing
- In-house coating line
- In-house tufting operation

From tufting, to coating, to full QC inspections, right on to shipping and installation, the equipment and space available in the Calhoun plant work together to further ensure that FieldTurf is the market leader in quality product. The plant features 10 tufting machines with an annual production capacity of 630,000,000 square feet of turf – enough to supply over 7,800 football fields per year. The new coating line that is at the heart of the Calhoun plant allows FieldTurf to set a new standard for turf quality and durability. It is

	an innovative coating process that has been developed by the industry leader to continue to focus on quality control and customer satisfaction. To ensure FieldTurf's standards are unmatched, a rigorous quality control process (based on extensive testing and inspections) is undertaken with every field that is put into production. First, yarn testing is performed, which includes tensile strength, elongation, tenacity, denier, shrinkage, and twist (turns per inch). The primary backing is inspected and the "pick count" or yarn density in relation to the backing- is verified to ensure the right amount of face yarn per square inch. Each tufting operator verifies the pile weight and pile height of the yarn to make sure that quality requirements are met every step of the way. If the pile weight is off by even the slightest amount, then it does not meet FieldTurf's stringent standards, and the turf is reproduced to exact measurements. Testing continues throughout the entire tufting process until all rolls for a field are complete. Once the rolls are complete, the fiber rows on the backing of each roll are carefully coated with polyurethane to complete FieldTurf's patented finger-unit backing design for enhanced fiber strength and optimal drainage efficiency. FieldTurf has full-time experienced coating inspectors at their facility in Calhoun, Georgia to ensure that the coasting is applied properly. Once small error and the roll is pulled from the line and reproduced. Once the coating process is complete, every component of the finished carpet undergoes final inspection before it is packaged and loaded onto the trucks for transportation to the job site. Each roll of carpet is numbered and positioned in the exact order that it will be loaded onto the transporters. Once on site, the rolls are unloaded and laid on the field in the specific order that was planned and designed by the head office engineering department. For every 5 rolls that are produced at the plant, a 2 ft by 15ft sample of turf is retained by the FieldTurf Research & Development department in Calhoun. These samples are carefully filed under the name of the corresponding field. This way the project can be verified through completion and beyond while the turf samples are analyzed on a regular basis. The state-of-the-art plant located in Calhoun is a big reason why FieldTurf is the number one choice of professional teams, high schools, colleges, and facility managers around the world. FieldTurf's ability to ensure the quality of its raw materials and its manufacturing from start to finish is the reason why it enjoys the best record for on-time delivery of its projects. **BEYNON Sports Surfacing Manufacturing:** Beynon controls all aspects of the manufacturing chain, which allows us to create the right product, regardless of the facility and to meet the EQUALIS specifications. Because our founder's name stands behind each track that we make, we take special care throughout the entire installation process. We do this by only using certified Beynon track installers, specialized equipment, and skilled craftsmen, which ensures impeccable results. Every Beynon track is manufactured in our ISO 9001 certified headquarters in Hunt Valley, Maryland, USA. Beynon chemists create the world's most refined running track surfaces. Quality and attention to detail are the utmost importance. To Beynon Sports, that means overseeing every surface from raw material selection, to manufacturing the system for the specific needs of the coaches and student-athletes, all the way through installation. It also means having our track and field systems tested and certified according to IAAF and DIN standards to ensure

	that your athletes receive a superior product. We guarantee the finest raw materials, tireless research and development, and outstanding workmanship go into each system. **Tarkett Sports Courts Manufacturing:** **Manufacturing Excellence:** ISO 9001 certified for leadership in quality, environment and safety management systems, Tarkett Sports' facilities in Calhoun (FieldTurf and Tarkett Sports Indoor), Chagrin Falls (Tarkett Sports Indoor), and Hunt Valley (Beynon Sports and Renner Sports) represent three of the most advanced manufacturing operations in North America. With international manufacturing facilities in Auchel, Sedan (France), Narni (Italy), Abtsteinach (Germany), Bačka Palanka (Serbia) and Botany (Australia), Tarkett Sports showcases an extended network of production capabilities.
1.3.2. ***Manufacturer Authorization.*** If your company is best described as a distributor, dealer, reseller, or similar entity please certify that your organization is authorized to sell the products and services at the price points disclosed in this proposal.	As described in responses above, FieldTurf, Beynon and Tarkett manufacture their respective sports surfacing products. FieldTurf USA, Inc. is a manufacturer of synthetic turf. Beynon Sports Surfacing is a manufacturer of running track urethane and indoor sport court products. Tarkett Sports is a manufacturer of indoor sport court products. Since all three brands are owned by one parent company, Tarkett Group, then FieldTurf is certified to provide all the Tarkett Sports products on the Equalis contract.
1.3.3. ***Authorized Distributors, Agents, Dealers, or Resellers***. Describe the different channels in which this contract will be made available to Equalis Group Members. Your response should include, but is not limited to, whether your organization will serve as the single point of sale or if the contract will be made available through a	FieldTurf USA, Inc. is owned by Tarkett Group, which also owns the companies below. The FieldTurf Equalis contract will be made available through our network of Tarkett Group companies listed below. **<u>The following FieldTurf Authorized Distributors/Resellers can issue Equalis proposals, accept PO's, contracts, payment on behalf of FieldTurf USA, Inc. for Equalis projects:</u>** • Benchmark Contracting Inc. • Beynon Sports Surfaces Inc. • Classic Turf Company LLC • EasyTurf/FieldTurf Commercial, a division of FieldTurf USA, Inc. • FieldTurf USA, Inc. • L.E.R. Inc. (dba as Renner Sports) • Mid-Atlantic Sports Construction- a division of FieldTurf USA, Inc. • Precision Construction & Contracting LLC (PCC) • Tarkett Sports Construction a division of FieldTurf USA, Inc. • Tarkett Sports Indoor- a division of FieldTurf USA, Inc. **FieldTurf USA, Inc. and the companies listed above are owned by Tarkett Group.**

network of distributors, agents, dealers, or resellers. **NOTE:** Respondents intending to authorize distributors, agents, dealers, or resellers must complete **Proposal Form 7 - Dealer, Distributor and Reseller Authorization Form**.	**List of approved subcontractors who work with FieldTurf and promote FieldTurf products/services/construction but PO's, contract, and payment is to FieldTurf USA, Inc.:** **The following companies are not Tarkett Group owned but are industry partners who may promote FieldTurf's Equalis contract.** • Ace Tennis • American Athletic Court Inc (AACI) • Beyond the Turf • Brock Industries • Cape and Island • Chenango Contracting, Inc • Clark Companies • Crafco • Deluxe Athletics • Desso • ELA Group, Inc • FieldTurf Northwest • Halecon • Hinding Tennis • Kerr Athletics • King Sports • Maser Consulting • MidWest FieldTurf • Mountain West • NIDY • OHNO Construction Co. • RS Global • Shaker Flats • Sportsfield Specialties • The Landtek Group • Vasco
1.3.4. ***Network Relationship***. If your company is best described as a manufacturer or service provider, please describe how your dealer, distributor, or contractor network operates to sell and deliver the Products &	FieldTurf is best described as a manufacturer and has the following dealer network that is internally owned by Tarkett Group. Each of the companies below have sales teams throughout the United States and are educated on how to incorporate Equalis into their sales presentations to municipalities. Additionally, SmartBuy, the cooperative purchasing division for FieldTurf and the Tarkett Sports, works with the sales teams of each company listed below to teach them how to use the Equalis contract, check for proposal compliance, and promote use of the Equalis contract. SmartBuy has training sessions with each company below and works closely with them to sell and deliver the products and services proposed in this contract. FieldTurf USA, Inc. is owned by Tarkett Group.

	Services proposed in your proposal. If applicable, is your network independent or company owned?	The following FieldTurf Authorized Distributors/Resellers can issue Equalis proposals, accept PO's, contracts, payment on behalf of FieldTurf USA, Inc. for Equalis projects: • Benchmark Contracting Inc. • Beynon Sports Surfaces Inc. • Classic Turf Company LLC • EasyTurf/FieldTurf Commercial, a division of FieldTurf USA, Inc. • FieldTurf USA, Inc. • L.E.R. Inc. (dba as Renner Sports) • Mid-Atlantic Sports Construction- a division of FieldTurf USA, Inc. • Precision Construction & Contracting LLC (PCC) • Tarkett Sports Construction a division of FieldTurf USA, Inc. • Tarkett Sports Indoor- a division of FieldTurf USA, Inc. **FieldTurf USA, Inc. and the companies listed above are owned by Tarkett Group= company owned.**
1.3.5.	***Industry Experience.*** How long has your company provided the products and services outlined in your proposal? What percentage of your company's revenue in each of the last three (3) full calendar years was generated from these products and services?	• FieldTurf has the most innovative product offering. • Independent testing has proven that FieldTurf is the safest turf system when compared to natural grass. • FieldTurf is one of the most vertically integrated companies in the world. • When it comes to playability and performance, FieldTurf is the clear market leader. • No other long pile, artificial turf system has lasted longer than FieldTurf. • For peace of mind, FieldTurf provides clients with the best insured warranty in the business. • FieldTurf is the clear choice of the pros. • FieldTurf offers First Class Customer Service. • Fieldturf is the clear choice of the NFL, NCAA and MLS. Over 10,000 fields worldwide, more than any other turf company in the industry. • When combining all these benefits it's clear that FieldTurf is simply…the best investment. **FieldTurf & Beynon Company Background** Headquartered in Montreal, Quebec, Canada - FieldTurf USA, Inc. comes from humble beginnings. Its debut in the sport surfacing industry was in 1988 with the introduction of a synthetic grass system for tennis courts and a synthetic grass surface used to minimize wear and tear around golf practice tees. The company then began developing synthetic turf surfaces for other sports installations including soccer, lacrosse, football and baseball. FieldTurf focused on perfecting a sports field system with a sand and rubber infill, which provided superior athlete safety, high performance and extreme durability. The infilled artificial turf industry was born when, in 1994, FieldTurf USA, Inc. installed its first full size indoor soccer field.

About Beynon:

Over 40 years ago, our founder, John T. Beynon, set out to revolutionize the sport surfacing industry. Since then, we have over 2500 installations worldwide and built an industry leading reputation for unmatched quality, durability, performance and most importantly, service.

Beynon surfaces are found in North America and Canada's most prestigious track and field facilities, reputed collegiate campuses, high schools, and city parks.

Not only do we strive to make you fast, but we help keep you safe. Our specialized, high performance synthetic athletic surfaces are designed for speed, competition, and most importantly, daily training. Should it be one of our thousands of outdoor tracks, indoor fieldhouses or multipurpose gymnasiums, you will feel the difference a Beynon surface makes.

In the spring of 2008, Beynon Sports joined the Tarkett Sports family, which combined the most recognized and prestigious name in the artificial turf market in FieldTurf with Beynon

Sports' track and field, fieldhouse and gymnasium surfacing systems and a dedication to innovation, customer service, and excellence.

Tarkett Sports:

Tarkett Sports covers all types of sports surfaces. It boasts a dominant position on its market, a full product line and key expertise at every level of sports. Tarkett Sports is a sports subsidiary of the Tarkett Group. Both FieldTurf and Beynon are part of the Tarkett Sports Division.

Years in Business: Tarkett Sports: 10 years

Years in Business: FieldTurf: 30 Years

Years in Business: Beynon: 40 Years

Tarkett Sports generated the following sales which is 95% comprised of the products and services offered in this bid: FieldTurf synthetic turf surfaces, Beynon Running Track Surfaces, Tarkett Sports Indoor court surfaces, outdoor court surfaces, professional design and engineering services/design build, and the related site work associated with turn-key construction of sports facilities.

	Tarkett Sports Total Sales	85% to Municipalities
2024	$ 1,104,558,000.00	$ 938,874,300.00
2023	$ 1,132,846,000.00	$ 962,919,100.00
2022	$ 928,155,320.00	$ 788,932,022.00

1.3.6. ***Geographic Reach.*** Describe your company's **current** service area in the United States and which areas you

FieldTurf, Beynon, and Tarkett Sports currently cover the entire Unites States.

intend to offer services under a resulting contract if awarded.

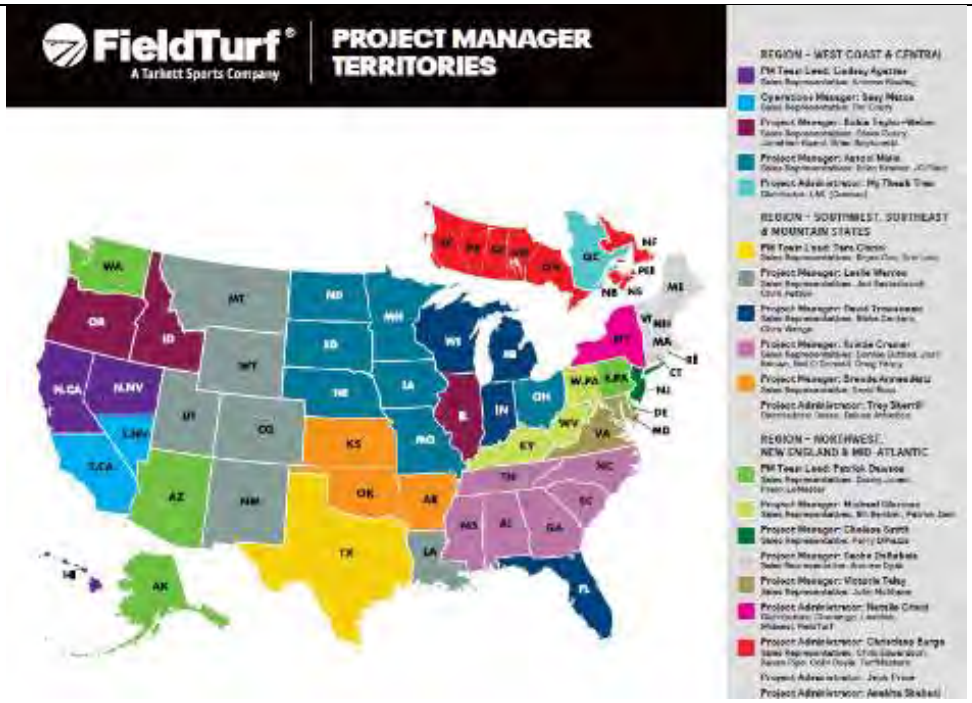

Providing a high-quality product and outstanding customer service has been a part of FieldTurf's successful business model since day One. Our customers are our number one priority, which is why we have taken the time to assemble an experienced and dedicated customer service department. We proactively follow up with each and every one of our customers to ensure complete and continuous satisfaction.

There are not any geographic regions of the US that FieldTurf cannot provide a certified technician to perform warranty work. Please see our Customer Service Representative Region map below to see that the entire US is covered

Tarkett Sports/FieldTurf Design and Construction Team across the United States:

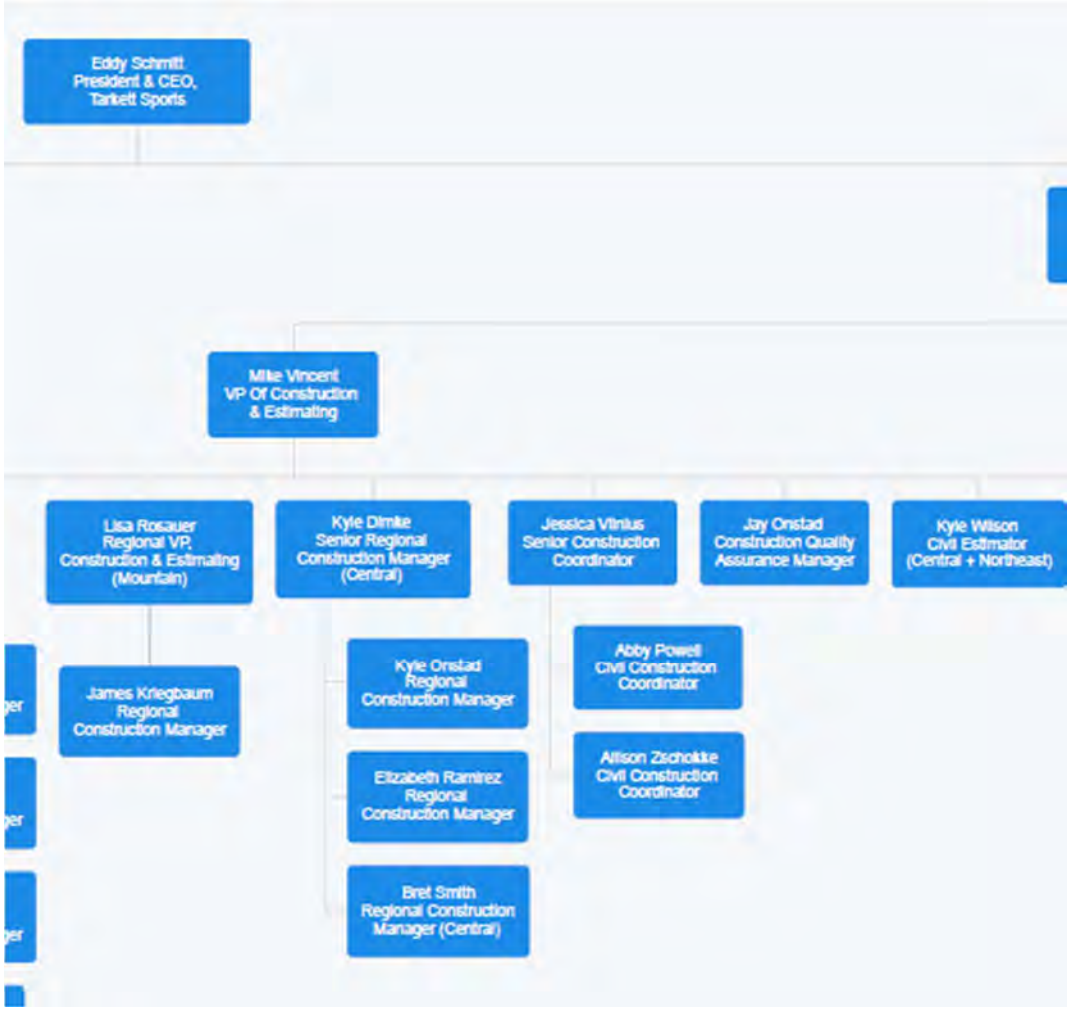

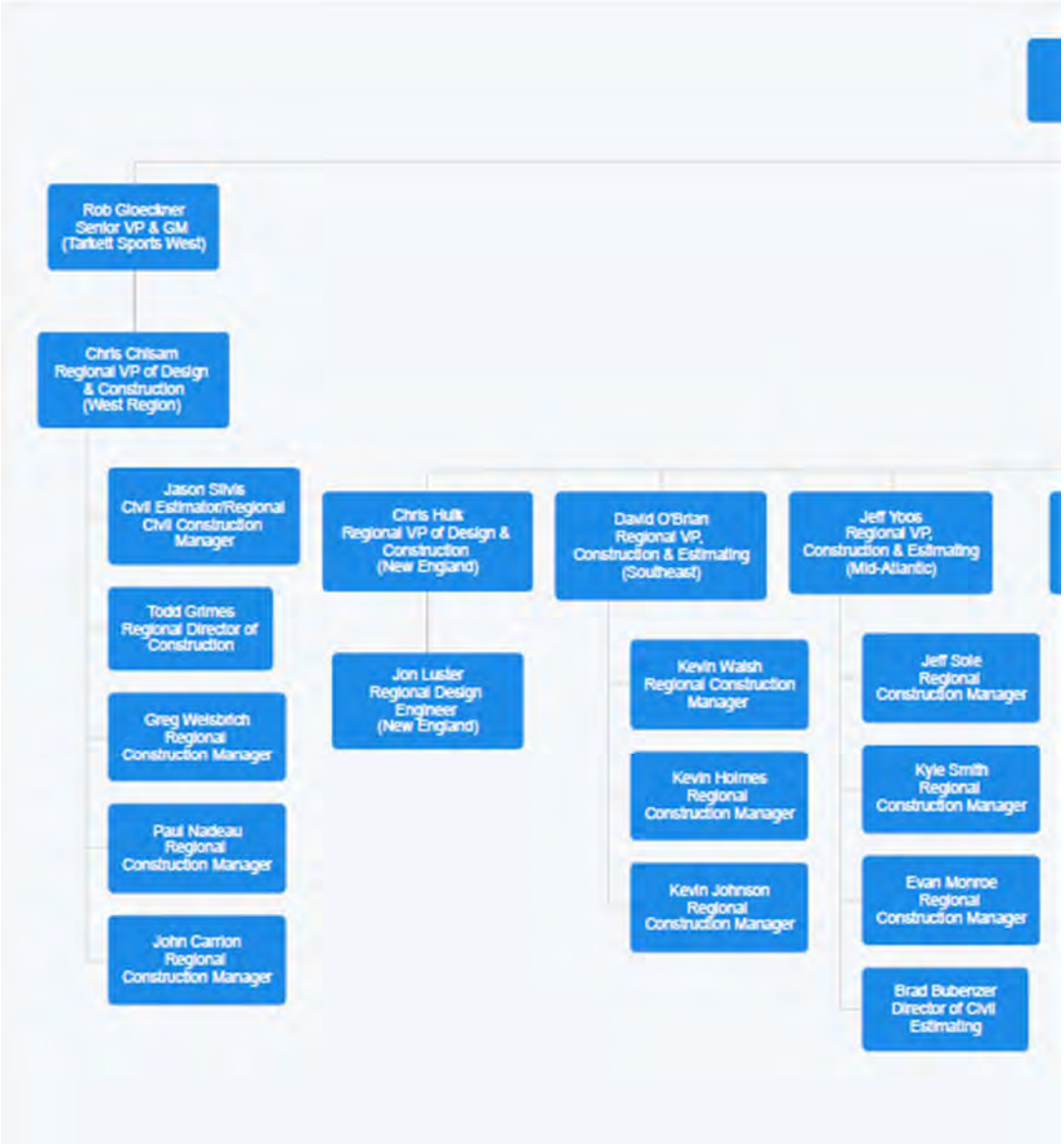
Rob Gloeckner
Senior VP & GM
(Tarkett Sports West)
Chris Chisam
Regional VP of Design & Construction
(West Region)
Jason Silvis
Civil Estimator/Regional Civil Construction Manager
Todd Grimes
Regional Director of Construction
Greg Weisbrich
Regional Construction Manager
Paul Nadeau
Regional Construction Manager
John Carrion
Regional Construction Manager
Chris Hulk
Regional VP of Design & Construction
(New England)
Jon Luster
Regional Design Engineer
(New England)
David O'Brian
Regional VP, Construction & Estimating
(Southeast)
Kevin Walsh
Regional Construction Manager
Kevin Holmes
Regional Construction Manager
Kevin Johnson
Regional Construction Manager
Jeff Yoos
Regional VP, Construction & Estimating
(Mid-Atlantic)
Jeff Sole
Regional Construction Manager
Kyle Smith
Regional Construction Manager
Evan Monroe
Regional Construction Manager
Brad Buberzer
Director of Civil Estimating

Beynon Sports Sales Teams for Running Tracks:

- Everett Bratsch – ND, SD, NE, MN, IA
- Dennis Regan-KS, MO, OK, AR
- Doug Wilson- TX, LA
- Seth Sheridan-MS, KY, TN, AL
- Kenny Smith-NC, SC, GA, FL
- Bill Teten-IL, MI, IN, OH, IL
- Tom Mitchell-NY, NJ
- Bryan Mitterling-PA, WV
- Mark Scrivano/Beynon – VA, Wash DC, MD, DE
- Andrew Dyjak – ME, VT, NH, MA, RI, CT
- Renner Sports – CO, UT, MT, WY
- Reed McNeil & James Traynor- OR, WA, ID,
- Mason Farnsworth- CA

BEYNON
A Tarkett Sports Company

2025 BSS East Sale, PM, Contracts Contact Information

Region	Name	Sales Cell	Sales Email	PM	PM Cell	@BeynonSports.com
1	Main Office	410-771-9473	Jreinke@BeynonSports.com	Justin Reinke	443-401-2528	Jreinke@beynonsports.com
2	Bill Teten Bill Moffitt	402-250-1826 614-784-5152	Bteten@BeynonSports.com Bmoffitt@beynonsports.com	Brooks Michel	443-761-2862	Bmichel@beynonsports.com
3	Bryan Mitterling	610-608-4998	Bmitterling@BeynonSports.com	Ivan Carrico	443-761-8156	Icarrico@beynonsports.com
4	Tom Mitchell	443-610-4661	Tmitchell@BeynonSports.com	Justin Reinke	443-401-2528	Jreinke@beynonsports.com
5	Kenny Smith	336-848-9112	Ksmith@BeynonSports.com	Ivan Carrico	443-761-8156	Icarrico@beynonsports.com
6	Seth Sheridan	615-892-0382	Ssheridan@BeynonSports.com	Kyle Cross	443-800-2167	Kcross@beynonsports.com
7	Serge Silva	315-436-8892	Ssilva@BeynonSports.com	Bryan DiVenanzio	443-834-9586	Bdivenanzio@BeynonSports.com
8	Everett Bratsch	612-900-5130	Ebratsch@BeynonSports.com	Luke Gerbes	443-987-5868	Lgerbes@BeynonSports.com
9	Dennis Regan	316-641-5970	Dregan@BeynonSports.com	Bryan DiVenanzio (Jeff Taylor)	443-834-9586 410-960-1226	Bdivenanzio@BeynonSports.com Jtaylor@beynonsports.com
10	Doug Wilson	512-639-3466	Doug.Wilson@TarkettSports.com	Connor Smith	443-761-0773	Jreinke@beynonsports.com

Region	Contract Administrator	Cell Phone	Email Address
1, 2, 3, 4	Katy Frederique	443-761-8156	Kfrederique@BeynonSports.com
5, 6, 7	Mardel Miller-Kowalewski	443-933-1508	Mmiller-kowalewski@BeynonSports.com
8, 9, 10	Lisa August	443-690-8144	Laugust@BeynonSports.com

BEYNON
A Tarkett Sports Company

2025 BSS East Responsibility Pipeline

Region	Salesperson	PM	Contract Administrator
1	Main Office	Justin Reinke	Katy Frederique
2	Bill Teten Bill Moffitt	Brooks Michel	Katy Frederique
3	Bryan Mitterling	Ivan Carrico	Katy Frederique
4	Tom Mitchell	Justin Reinke	Katy Frederique
5	Kenny Smith	Ivan Carrico	Mardel Miller-Kowalewski
6	Seth Sheridan	Kyle Cross	Mardel Miller-Kowalewski
7	Serge Silva	Bryan DiVenanzio	Mardel Miller-Kowalewski
8	Everett Bratsch	Luke Gerbes	Lisa August
9	Dennis Regan	Bryan DiVenanzio (Jeff Taylor)	Lisa August
10	Doug Wilson	Connor Smith	Lisa August

Outdoor Courts Sales Team:

- PCC- via Tarkett Sports Construction – AL, AR, IL, IN, IA, KS, KY, LA, MI, MN, MO, NE, NC, ND, OK, OH, SC, SD, TN, TX, WI
- Classic Turf: CT, NJ, NH, VT, NY, DE
- Beynon Sports: Cody Taylor- WA, OR, ID
- Zaino Sports/Beynon Sports: CA, NV, AZ
- L.E.R. Inc. (dba as Renner Sports): MT, CO, UT, WY
- AACI – NJ, FL
- Crafco- NY
- Mid-Atlantic Construction: WV, VA, PA,
- Deluxe Athletics: Daniel Griffin: GA

1.3.7. ***Socio-economically Disadvantaged Business Engagement***. Does bidder commit to take all affirmative steps set forth in 2 CFR 200.321 to assure that minority businesses, women's business enterprises, labor surplus area firms are used when possible.

☒ Yes
☐ No

FieldTurf, Beynon and Tarkett Sports work with several MWBE companies as subcontractors. As part of the FieldTurf GSA contract, we keep a file of any subcontractor MWBE status via a size self-certification form where each company completes information regarding their MWBE status including: employee number, location, and NAICS code. For example, Kings Sports Construction, Based in MD is women owned and one of FieldTurf's premier base construction partners. See detailed response to next question where additional examples of MWBE companies that FieldTurf partners with are provided.

Women Owned
KING SPORTS CONSTRUCTION – Mid Atlantic Region/Maryland 15 employees
SportTech Construction FieldTurf- Pacific NW
CAROLINA GREEN CORPORATION- NC (48 employees)
GREENSGROOMER WORLDWIDE LLC – Indiana, 7 employees
TERRA DYNAMICS INC- Washington, base construction, 44 employees
SPORTS CONSULTING GROUP LLC
EAGLE TRANSPORTATION SERVICES, INC. Georgia (6 employees) Certified Women Owned Small Business. Transportation Services. 6 employees
Minnesota Sodding Company, MN, 21 employees SOD
TREASURE STATE ELECTRICAL CONTRACTING INC. Montana 10 employees.
Terradon Corporation, WV, 84 employees, Engineering Firm
Allied Engineered Products, Dalton GA, 19 employees
P.W. Gillibrand, California, 135 employees, Rock/Quarry
Bedrock Transportation, LLC (Certified by SBA as Small Disadvantaged Business & HUB Zone small Business and Women owned)
Beyond the Turf, Inc. Washington, 75 employees turf installation and maintenance.

SBD (DBE, MBE)
American Tennis Courts Corp (ATC) Certified MBE, PA
Best Fence, LLC - Maryland. Minority Business Enterprise 13 employees
American Lawn and Tree Specialists
Groshell Logistics Inc-
HARVEY HARRIS CONTRACTING,INC.-
OMA Construction – Washington, 120 employees Certified by SBA as a Small Disadvantaged employee
Ohno Construction Company, Minority Owned (Asian), Seattle Washington.

Veteran-Owned SB
TD SPORTS GROUP LLC
Lodging Source, LLC South Carolina, 14 employees
Green Power Chemical, LLC – Veteran Owned Small Business, NJ, 10 employees
Winema Electric, Inc. Oregon, 22 employees Service Disabled Veteran Owned Small Business
TS Turf, California, 6 employees (turf installation)

1.3.8. ***Certifications and Licenses.*** Provide a detailed explanation outlining the licenses and certifications that are i) required to be held, and ii) actually held by your organization (including third parties and subcontractors that you use). Has your company maintained these certifications on an ongoing basis? If not, when and why did your company lose any referenced certifications?

NOTE: Provide copies of any of the certificates or licenses included in your response in **Proposal Form 5 - Certifications and Licenses**.

FieldTurf's licensures are maintained and current.

FIELDTURF USA, Inc.		
STATE	**License Number**	**License Class**
Alabama	51948	General Contractor
Alabama	S-40652	Sub-Contractor
Alaska	CONE33631	General Contractor
Arizona	314411	Dual KA
Arkansas	172490623	General Contractor
California (Public Works License-DIR)	1000004625	DIR license
California	849044	Contractor Registration
Delaware	2008203565	331-Contractor-Resident
Florida	CGC1507328	General Contractor
Georgia	GCCO005138	General Contractor Company
Idaho (PWC)	PWC-C-16674-AAA-4	20790, 02740, 02310
Idaho (Burreau of Occupational Licenses - non-public bids)	RCE-38454	
Illinois Department of Human Rights	IDHR # 120963-00	n/a
Indiana	20230616	General Contractor
Iowa	C106260	Registered Contractor
Louisiana	CL.0045097	artificial turf, specialty, recreation & sporting facilities & golf courses
Minnesota	IR714564	Contractor Registration
Mississipi	16435-SC	Asphalt, Excavating, Grading & Drainage
Montana	156033	Construction Contractor
Nebraska	44678-22	Contractor Registration
Nevada	68611	C10 Limited to synthetic turf only
***New Jersey**	631021	Public Works Contractor
***New Jersey**		School Development Authority Prequal
New Mexico	363013	GF05 and GB98 (General Builder);
New Mexico	2471720120608	Department of Public Works (Workforce Solutions)
North Carolina	66648	General Contracting
North Dakota	49661	Class A Contractor
Oregon	181583	GC - Commercial & Residential
Rhode Island	40614	Class C Commercial
South Carolina	G116980	BD5 GD5 H15 BT5 MS5 RR5 WL5
Tennessee	57455	S-Athletic & S-Running
Utah	7330453-5501	E100, S310, S500
Virginia	2705106035	Class A Highway & Rec Facility
Washington	CC01 FIELDU1955JH	Construction Contractor
West Virginia	WV043760	General Building
Wyoming ***depends on county/city**	3564	General
Wyoming ***depends on county/city**	3074	Excavation & Grading
Wyoming ***depends on county/city**	3075	Miscellaenous

1.4. Public Sector Experience

1.4.1. *Public Sector Cooperative Contracts.* Provide a list of the public sector cooperative contracts (e.g., state term contracts, public sector cooperatives, etc.) you currently hold and the annual revenue through those contracts in each of the last three (3) calendar years. Please exclude information and data associated with federal agencies or GSA contracts.

Contract Name	Contract #	Contract Expiration	2024	2023	2022
1GPA	25-06PV-02	10/12/25	$2,049,328	$416,384	$935,768
1GPA	23-01DP-01	8/15/27			
AEPA	AEPA IFB #024-A	2/28/28	$97,120,734	$105,411,872	$59,109,3589
Bergen County, NJ	BC-C-24-004	12/3/25	$0	$0	$0
BuyBoard	#737-24	5/31/27	$14,727,196	$9,227,428	$3,544,345
Choice Partners	23/040MR-01	8/15/27	$52,150	$328,342	$8,478,176
CMAS-GSA	4-06-78-0031A	11/30/26	Excluded	Excluded	Excluded
CMAS-AEPA	4-24-03-1000	2/28/28	$19,269,510	$41,496,517	$12,386,087
Co Stars	014-E23-307	2/16/26	$1,960,479	$3,016,022	$2,722,612
E & I	CNR01447	8/31/27	$9,780,836	$8,192,346	$9,614,500
ESCNJ – Turf	22/23-37	3/21/26	$16,042,487	$11,879,644	$19,859,527
ESCNJ-Track/Court	22/23-47	6/1/25	$22,101,008	$14,957,806	
Equalis Group	#2020.052	8/31/25	$42,592,185	$9,361,510	$5,444,504
GSA	GS-07F-9631S	8/2026	Excluded	Excluded	Excluded
Kinetic GPO	RFSO 23-14	2/28/29	$3,774,007	$5,843,083	$2,257,129
KPN	KPN #202401-01	2/28/2028	$102,406,984	$135,902,064	$73,548,678
NCPA	#08-30	12/31/25	$4,263,732	$908,517	$3,982,570
Omnia Partners (NIPA/TCPN)	R220503	3/31/27	$14,245,976	$4,190,453	$5,084,428
UTAH DAS-OMNIA	# PA4631	3/31/27	$15,429,942	$5,278,648	$9,453,732
Sourcewell	#031622-FTU	5/26/26	$9,453,732	$5,278,648	$9,453,732
Sourcewell - Indoor	#031022-FTU	5/26/26			
TIPS	#23020101 & 23020102	4/30/25	$361,565	$6,018,080	$1,716,588

1.4.2. *Education Success.* What is the **i)** total dollar amount, and **ii)** percentage of your company's total annual revenue generated by sales to educational institutions (i.e., K-12 schools & school districts and high education)?

i) See chart below for total sales dollar amount in past 3 years to Educational Institutions.

ii) 85% of FieldTurf sales are to local governments and educational institutions. 45% to Educational Institutions such as K-12 School Districts, Colleges, and Universities. 40% to cities, counties, and park and recreation entities.

	Tarkett Sports Total Sales	85% to Municipalities	45% K-12/Higher Ed
2024	$ 1,104,558,000.00	$ 938,874,300.00	$ 422,493,435.00
2023	$ 1,132,846,000.00	$ 962,919,100.00	$ 433,313,595.00
2022	$ 928,155,320.00	$ 788,932,022.00	$ 355,019,409.90

Key Elements to achieve sales projection:

SmartBuy is the dedicated Cooperative Purchasing Division of FieldTurf/Beynon. With over 25 years of combined experience and over $1 billion revenue in cooperative purchasing, the SmartBuy/FieldTurf/Beynon teams have enabled hundreds of municipalities including public schools, colleges, universities, cities, park/recreation departments, and counties to purchase their desired FieldTurf sports field, Beynon running track, or Beynon court. The following steps will be used to market the Equalis contract and to meet the projected sales volume:

- Corporate Top Down Instruction to incorporate Equalis into sales presentations.
- Continued Education for the nationwide Beynon and FieldTurf sales teams and regional Vice President Team

- SmartBuy-Dedicated Team to Market and Manage Equalis Contract
- Promoting Equalis Contract to Municipalities
- Print Advertising and direct mailing
- Trade Show attendance
- Electronic, Web, and Social Media site advertising

1.4.3. ***Government Success.*** What is the **i)** total dollar amount, and **ii)** percentage of your company's total annual revenue generated by sales to local governments (i.e., municipalities, counties, special districts, and state agencies)?

FieldTurf, Beynon, and Tarkett Sports all actively currently work with local government agencies such as municipalities, cities, counties, and park and recreation agencies.

	Tarkett Sports Total Sales	85% to Municipalities	40% to Cities, Counties, Park and Rec, State Agencies
2024	$ 1,104,558,000.00	$ 938,874,300.00	$ 375,549,720.00
2023	$ 1,132,846,000.00	$ 962,919,100.00	$ 385,167,640.00
2022	$ 928,155,320.00	$ 788,932,022.00	$ 315,572,808.80

1.4.4. ***Customer References.*** Provide references of at least five (5) local government or educational institution customers for which your company has provided products and services similar in nature and scope to those defined in this RFP in the last three (3) years.

Each reference should include:

a. Customer contact person and their title, telephone number, and

1. **Belpre City Schools – Belpre HS track (Ohio)**
   a.) Jeffrey Greenley, Superintendent
   740-423-9511 bc_jgreenley@belpre.k12.oh.us
   b.) Remove existing/Install Beynon BSS 1000 w/all track lane lines and event markings
   c.) March 2022-December 2023
   d.) Contract Value: $1,036,709.00

2. **Huber Heights City School District - Wayne HS Track (Ohio)**
   a.) Pamela Moore
   937-237-6388 Pamela.Moore@myhhcs.org
   b.) Removal of existing/install Beynon BSS 1000 + site work
   c.) June 2023-June 2024
   d.) Contract Value: $1,096,594.00

3. **Humble Independent School District - Four high schools (Texas)**
   a.) Troy Kite
   281-850-2748 troy.kite@humble.k12.tx.us
   b.) Installing turf systems + site work at 4 schools (Summer Creek HS, Atascocita HS, Kingswood HS & Kingwood Park HS), 2 fields per school: DoublePlay Natural w/softball markings, logos & DoublePlay Natural w/baseball markings, logos.
   c.) November 2022-December 2023
   d.) Contract Value: $3,298,479.00

4. **City of Midland Reyes - Mashburn-Nelms Park Baseball complex (Texas)**
   a.) Laurie Williams Asst. Community Services Director
   432-685-7370 lwilliams@midlandtexas.gov

email address; **b.** A brief description of the products and services provided by your company; **c.** Customer relationship starting and ending dates; and, ***d.*** Notes or other pertinent information relating to the customer and/or the products and services your company provided.	b.) FieldTurf DoublePlay Natural w/baseball markings on 6 fields w/site development c.) February 2024-June 2024 d.) Contract Value: $12,547,422.00 **5. Leander Independent School District – Cedar Park & Vista Ridge HS (Texas)** a.) Clint Walker Maintenance Project Manager 512-570-0649 clint.walker@leanderisd.org b.) FieldTurf ClassicHD 2.25" w/ CoolPlay, end zone letters, football & soccer markings, site work at both high schools c.) May 2023-June 2023 d.) Contract Value: $1,085,283.69

2. CAPABILITIES

2.1. PRODUCTS & SERVICES

2.1.1. ***Product Offering & Description(s).*** Provide a detailed description of the products you are offering as a part of your proposal. Your response may include, but is not limited to, information related to performance characteristics differentiators,	**About FieldTurf USA, Inc.:** When it comes to artificial turf sports fields, FieldTurf is the most trusted brand in the industry. Whether its football, soccer, baseball or any other sport, FieldTurf fields provide athletes with the safety and performance they need to perform at their best, while giving field owners the durability they want to maximize the value of their investment. FieldTurf was developed and engineered for athletes, by athletes. Before we came along, artificial turf was something to be avoided. The very phrase conjured up images of carpet and concrete, non-contact injuries, and careers ended prematurely. Natural grass was considered the only solution – even though it required constant maintenance and care. This was the environment in which we asked ourselves one question: *"Can we make synthetic turf that is equal to or better than the best natural grass?"* In seeking the answer to this question, we worked closely with athletes, former players, coaches, trainers, and doctors. Development included years of trials, tests, samples, equipment innovations and advanced formulas – all with the goal of developing an artificial turf system that combined the performance properties of natural grass with the benefits of a synthetic solution. It worked. The first company in the synthetic turf industry to own and operate its own manufacturing plant. One of the only artificial turf manufacturing operations in North

manufacturing capabilities & advantages, innovation and technology, regulatory & safety standards, or any other piece of information that would help understand the breadth and depth of the proposed product offering. **IMPORTANT.** This description along with the products and services included in the **Attachment B – Cost Proposal** will be utilized to define the overall products and services available under a resulting contract.	America and Canada to have received three specific ISO certifications 450,000+ square-foot facility in Calhoun, Georgia· World Headquarters in Montreal, Quebec, Canada· Over 40 employees at the plant with a combined 300+ years of experience in the artificial turf industry. Annual production capacity that exceeds the worldwide yearly demand for artificial turf; rigorous quality control and inspection; in-house fiber manufacturing; in-house coating line; and in-house tufting operation. With a fully dedicated cooperative purchasing team. FieldTurf also reached triple ISO Certification (Environmental 14001, Occupational Health and Safety 18001, and Quality 9001) in 2010 which is the only turf company in North America with this distinction. FieldTurf performs the following directly: • Manufacture, supply and installation of turf • Design and engineering • Design assist • On-site supervision • Maintenance • Recycling of infill • Removal/disposal services • Infilling • Sewing • Stitching • Gluing • Painting • Drafting • Logo Design, manufacture and installation In addition to these items, FieldTurf is one of the most vertically integrated companies in the industry with sales, manufacturing, project management, marketing and installation/ construction resources capable of supporting more than 500 fields per year. As FieldTurf's development and innovation teams are committed to creating the world's leading turf product, our sales force is committed to delivering the best surfacing solution for our clients. Whether its football, soccer, baseball or any other sport, FieldTurf fields provide athletes with the safety and performance they need to perform at their best, while giving field owners the durability they want to maximize the value of their investment. FieldTurf is a world leader in artificial turf with over 20,000 installations worldwide. **About Beynon:** Over 40 years ago, our founder, John T. Beynon, set out to revolutionize the sport surfacing industry. Since then, we have over 2500 installations worldwide and built an industry leading reputation for unmatched quality, durability, performance and most importantly, service. Beynon surfaces are found in North America and Canada's most prestigious track and field facilities, reputed collegiate campuses, high schools, and city parks. Not only do we strive to make you fast, but we help keep you safe. Our specialized, high performance synthetic athletic surfaces are designed for speed, competition, and most importantly, daily training. Should it be one of our thousands of outdoor tracks, indoor fieldhouses or multipurpose gymnasiums, you will feel the difference a Beynon surface makes. In the spring of 2008, Beynon Sports joined the Tarkett Sports family, which combined the most recognized and prestigious name in the artificial turf market in FieldTurf with

Beynon Sports track and field, fieldhouse and gymnasium surfacing systems and a dedication to innovation, customer service, and excellence.

Tarkett Sports: Tarkett Sports is a world leader in athletic surfacing and is a division of Tarkett Group, which was established in 1886. Tarkett Sports covers all types of sports surfaces. It boasts a dominant position on its market, a full product line and key expertise at every level of sports. Tarkett Sports is a sports subsidiary of the Tarkett Group. Both FieldTurf and Beynon are part of the Tarkett Sports Division. The Tarkett Sports approach to indoor sports flooring is to be a knowledge resource for all sports facility stakeholders and provide the right flooring solutions for the needs and values of our customers. To accomplish this, we offer a wide range of gym flooring options, suitable for many different activities and level of competition. In addition, we strive to offer expertise and knowledge that will help make each project a success. Tarkett Sports also provides comprehensive environmental data for each of its gym flooring options, allowing each customer the opportunity to make informed decisions according to their values.

FieldTurf, Beynon, Tarkett manufacture our own products in house all under one company name of Tarkett Sports. FieldTurf is the selected division to respond to cooperative purchasing contracts on behalf of our parent company Tarkett Sports.

FieldTurf Manufactured Products Provided:

FieldTurf Synthetic Turf Systems

FieldTurf CORE 2.5”/2.25”/2.0”

FieldTurf Revolution 360 2.5”/2.25”/2.0”

FieldTurf Classic HD 2.5”/2.25”/2.0”

FieldTurf XM7 2.5”/2.25”/2.0”

Fieldturf XT 2.5”/2.25”/2.0”

FieldTurf Vertex Prime 2.5”/2.25”/2.0”

FieldTurf Vertex Prime CORE 2.5”/2.25”/2”

FieldTurf Vertex 2.5”/2.25”/2.0”

FieldTurf Hockey Gold

FieldTurf EasyField – Removable Tray System

FieldTurf DoublePlay Speed Baseball Infield/Outfield

Fieldturf Double Play Natural Baseball Infield/Outfield

FieldTurf TripleThreat Speed Softball Infield/Outfield

FieldTurf TripleThreat Natural Softball Infield/Outfield

FieldTurf Recover – Replacement Overlay

FieldTurf Removable Batter/Umpire Area Baseball System

FieldTurf Pitching Mound and Home Plate System

FieldTurf Change Pitching Mound or Easy Change Home Plate

CCS CoolTop court System

Turf Inlaid Markings and Ancillary Items

FieldTurf Inlaid Football Numbers/Arrows

FieldTurf Inlaid Hash marks

FieldTurf Inlaid Soccer Markings

	FieldTurf Logo FieldTurf – Endzone Letters FieldTurf - Field Hockey Lines FieldTurf - Lacrosse Lines FieldTurf - Baseball Lines FieldTurf – Flag Football Lines FieldTurf - Softball Lines FieldTurf – Football Restraining Lines FieldTurf – Lacrosse Tick Marks **Testing/Field Monitoring/Misc Services:** FieldTurf – GMAX FieldTurf Preshipment Testing FieldTurf Genius Turf removal/disposal Supply and Installation of Natural Grass **FieldTurf Underlayment Options** Beynon E-Layer PDS Drain Tiles Proplay – Proplay PowerBase Pro ThermaGreen 23mm ThermaGreen V Brock Powerbase Brock SP 14 Beynon Shock Base 19mm-26mm Versatile **FieldTurf Alternate Turf Infill Options:** FieldTurf CoolPlay EPDM EASY Fill – Coated Sand EnviroFill ECO-GRIND ECO-GREEN ECO-MAX PUREFILL – Cork PURESELECT – Olive Pits PURE GEO- Coconut TrueBlend CoolCob Infill PureCob (Corn Cob) Infill **FieldTurf Turf Grooming and Maintenance Options** FieldTurf GroomRight

	FieldTurf SweepRight FieldTurf SweepRight Pro FieldTurf Groomright Wings FieldTurf Tow Behind Magnet FieldTurf Static Brush FieldTurf Sweep FieldCare Maintenance Packages: 1, 5, 8 PureCare Maintenance Packages 1, 5, 8 SaniSport FieldTurf Cleanse Complete **Synthetic Turf for Playground, Pet, Commercial, Landscaping applications** FieldTurf Command CORE FieldTurf Command Play FieldTurf Command Duo FieldTurf EasyPlay FieldTurf EasyPlay Color FieldTurf Classic HD Sports Turf FieldTurf EZ Putt 2 Putting Green FieldTurf Playground Pad 2” FieldTurf Playground Pad 1” FieldTurf VersaTile for Landscape FieldTurf AirField/FieldTurf Classic HD 2.5” FieldTurf Command Agility **Running Track Surfacing Solutions** **Latex and Beynon Urethane Track Surfaces** L-2000 Black or Red Polyresin (13mm) Poly-4000 Beynon - BSS 50 Beynon- BSS-100 Beynon-BSS-200 Beynon-BSS-300 Beynon- BSS-1000 10mm Beynon- BSS-1000 13mm Beynon-BSS-1000 ML Beynon-BSS-2000 13mm **Resurfacing on an Existing Rubber Running Track** Top-Coat (latex track) Black or Red Polyresin Resurfacing Beynon BSS-50RE Beynon-BSS -100RE Beynon-BSS-200RE

	Beynon-BSS-300RE Beynon-BSS-2000 RE 5mm Beynon-BSS-2000 RE 7mm Beynon WaterBased Spray WBSS Beynon Hobart Coating Beynon Retention Coat **<u>Track misc. items</u>** Beynon- In-situ-Base Track Restriping Track Cleaning Fast Track 1 Fast Track 3 Fast Track 5 Fast Track 8 **<u>Field/Track/Court Equipment and Accessories</u>** Pole Vault Pit Take off Boards Shot Put Toe Boards Shot Put Rings Discus Rings Combination Hammer/Discus Cage Hammer/Discus Conversion Ring Water Jump Hurdle with Sleeves Water Jump Cover Removable Track Curbing Long jump Sand pits and traps Sand for Sand Pits and Traps Football Goal Posts-Set Access Frame Kit with Infill retainer System for Adjust Right Football Goal Posts Set Soccer Goals-Set Soccer Goal Wheel Kit Batting Cages Tennis Court nets, posts anchors Portable Pickleball net system Protective Netting System **<u>Indoor/Outdoor Court Options</u>** Outdoor Court Surfacing – Plexipave Court Crack Repair Classic Court CoolTop Court

	Tarkett Indoor Court Synthetic Systems Omnisports PolyTurf Plus Pad and Pour: 7+2- Polyurethane Single Color Dancefloor Lumaflex Dropzone Clutch Court **OMNISPORTS: Sports Vinyl** provides a high degree of shock absorption, uniformity, and comfort for athletes. It is ideal for basketball, volleyball, pickleball, futsal, and many other applications, but also excels in multipurpose activity facilities. If your area will host not only sports, but conferences, assemblies, and events, a shock absorbing vinyl floor can be an excellent choice. It is most common in K-12 schools, community centers, private athletic centers, and churches. Tarkett Sports' sports vinyl product is OMNISPORTs: Omnisports is becoming one of the most popular, versatile gym floors in North America. Omnisports can accommodate tables and chairs, while its performance characteristics are ideal for basketball, volleyball, martial arts, yoga, and many other activities. This make Omnisports the perfect gym floor for schools, universities, and community centers, where a variety of sports or events might occur. Omnisports 7.1mm offers Class 2 shock absorption according to the ASTM F2772 Standard. Maintenance is that easy with Omnisports. Our systems are finished with our factory applied polyurethane surface treatment, TopClean XP. The application delivers leading resistance to scratches, scuffs, stains and abrasion. As the TopClean XP surface treatment does not promote organism microbial growth, the system reduces the possibility of bacteria and micro-organisms build up on the surface. **Polyurethane Pad and Pour** is one of the most versatile and durable sports flooring solutions. It is suitable for basketball and other indoor activities while standing up to high point loads and rolling loads and is commonly seamless. PolyTurf Plus Pad and Pour is a seamless sports flooring option, manufactured by Beynon Sports Surfaces an ISO 9001 Certified manufacturer. This ensures a level of quality and consistency in production. **Combi-Elastic System: LumaFlex** is a substructure of sturdy birch plywood and shock absorbing foam that raises the profile of a resilient sports floor to create a combination system. The area of deformation on point-elastic flooring is much smaller than area-elastic systems: the surrounding areas of the floor remain relatively unchanged by activity in a particular area. Area-elastic floors disperse downward force over a wide surface area, engaging more of the surface area in absorbing and returning energy to the athlete. A Combi-Elastic system combines point-elastic surface properties with an area –elastic substructure. By engaging both types of elasticity, all LumaFlex systems respond to impact both locally and across the wider surface area. As a result of this dual response, they are widely regarded as one of the best sports floor for comfort, safety, Multi-use, and sports performance. **Vulcanized Rubber flooring** is comprised of a recycled rubber underlayment with a virgin rubber wear layer on the top for color. Durability is a key characteristic. It is engineered to hold up under constant traffic including ice skates and heavy fitness equipment. Vulcanized rubber reduces sound transmission and resists impact from weights, cleats,

	and skates. DROPZONE FLEX and IMPACT are the Tarkett Sports' rubber flooring for this application. **Recycled Rubber with EPDM** is a particular type of rubber flooring is intended for practicality rather than competitive play. If you are considering flooring options for a weight room or training room, this is the ideal surface. Recycled rubber with EPDM chips is commonly available in easy-to–install rolls or tiles in various thicknesses. **Site Work:** Site Work includes but is not limited to any construction necessary to build base for Turf, Track, or Court surfaces to be placed on. New Construction – Sq. foot/yard pricing is for supply and installation of sports surfacing only. FieldTurf is prepared to offer turn-key solutions for the construction of the base of running tracks, courts, indoor flooring projects and fields through use of RS Means. The best value pricing for base or civil work is obtained through this costing method. Site work or new construction may include but is not limited to: removal and disposal of existing sports surface, lighting, demolition, excavation, rock base aggregate, top rock, asphalt, concrete, sidewalks, turf shock absorption underlayment such as e-layer or padding, tie in to existing drainage, drainage systems, conduits, fencing, crack repair, asphalt repair, etc. which can be purchased through RS MEANS. RS MEANS is self-contained and consists of a turn-key solution that includes a complete line-item listing of all the products, supplies, material, equipment, services, accessories and options with their description, specification, terms, conditions and associated pricing for each item, sub-assemblies and/or assemblies. FieldTurf reserves the right to offer a discount or "adjustment down" to the RS MEANS calculation to account for volume discounts or to stay within standard market pricing. **Professional Services for any site work project** • Project design, design build, development or consultant/construction management. • Professional engineering services. • Installer/admin (tradesman) (not related to turf, track, or court installation. • Project Administrator costs for site work.
2.1.2. ***Service & Solution Capabilities.*** Provide a detailed description of the services you are offering as a part of your proposal. Your response may include, but is not limited to, information related to turnkey capabilities,	**Site Work:** Site Work includes but is not limited to any construction necessary to build base for Turf, Track, or Court surfaces to be placed on. New Construction – Sq. foot/yard pricing is for supply and installation of sports surfacing only. FieldTurf is prepared to offer turn-key solutions for the construction of the base of running tracks, courts, indoor flooring projects and fields through use of RS Means. The best value pricing for base or civil work is obtained through this costing method. Site work or new construction may include but is not limited to: removal and disposal of existing sports surface, lighting, demolition, excavation, rock base aggregate, top rock, asphalt, concrete, sidewalks, turf shock absorption underlayment such as e-layer or padding, tie in to existing drainage, drainage systems, conduits, fencing, crack repair, asphalt repair, etc. which can be purchased through RS MEANS. RS MEANS is self-contained and consists of a turn-key solution that includes a complete line-item listing of all the products, supplies, material, equipment, services, accessories and options with their description, specification, terms, conditions and associated pricing for each item, sub-assemblies and/or assemblies. FieldTurf reserves the right to offer a

project management, design, engineering, installation or set-up, training services, maintenance services, testing, field and court marking, or any other piece of information that would help understand the breadth and depth of your products and service offering. **IMPORTANT.** This description along with the products and services included in the **Attachment B – Cost Proposal** will be utilized to define the overall products and services available under a resulting contract.	discount or "adjustment down" to the RS MEANS calculation to account for volume discounts or to stay within standard market pricing. **Professional Services for any site work project** • Project design, development or consultant/construction management. • Professional engineering services. • Installer/admin (tradesman) (not related to turf, track, or court installation. • Project Administrator costs for site work. **Sports Turf Base Construction Process:** **Base Construction Process (3-6 weeks)** • Site Investigation & Permitting • Install Construction Entrance/Track Protection Along with • Erosion and Sediment Controls (if necessary) • Field Excavation to Subgrade • Install Perimeter Concrete Curb/Nailer • Install Geotextile Fabric and Field Underdrain System (per site specifications) • Install Free Draining Base Stone and Finish Stone **Turf Installation Process (3 weeks)** • Off Load Turf Rolls and Place Turf • Sew Turf Panels • Install Field Markings and Decorative Markings • Install Infill • Remove Construction Entrance/Clean Up/Demobilize/Test Field **POST-INSTALLATION FOLLOW UP (2 weeks)** • Certificate of Completion • Warranty • Maintenance Training/Equipment • Payment Schedule

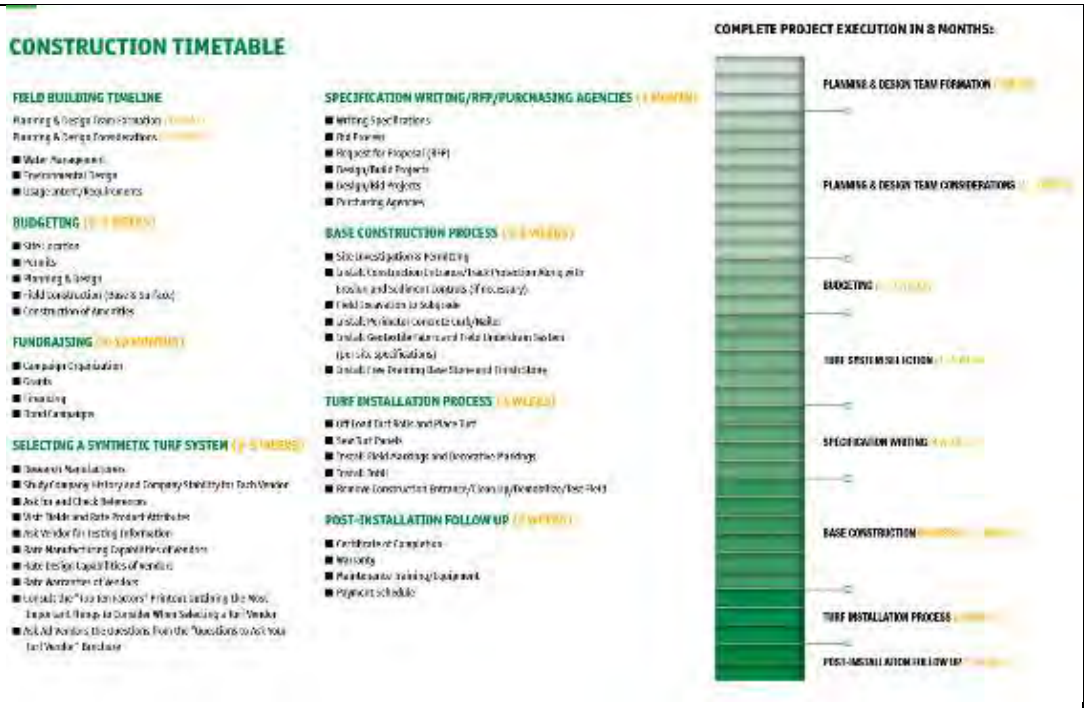

Running Track Construction and Installation:

- The Synthetic Track Surfacing System shall be laid on an approved subbase. The General Contractor shall provide compaction test results of 92-96% for the installed subbase and asphalt surface.
- For NCAA certification the following criteria must be followed. The track surface, i.e. asphalt substrate, shall not vary from planned cross slope by more than +/- 0.2%, with a maximum lateral slope outside to inside of 1%, and a maximum slope of 0.1% in any running direction. The finished asphalt shall not vary under a 10' straight edge more than 1/8".
- It should be the responsibility of the asphalt-paving contractor to flood the surface immediately after the asphalt is capable of handling traffic. If, after 20 minutes of drying time, there are birdbath evident, it shall be the responsibility of the architect, in conjunction with the surfacing contractor, to determine the method of correction. No cold tar patching, skin patching or sand mix patching will be acceptable.
- The construction of the subbase should be built so it may **support, without deformation or failure, the traffic of all the necessary equipment in the construction of the sports facility**. The subbase compaction should be clearly identified in the project specifications to a minimum of **95% Proctor**.
- The subbase construction should **manage all the designated loads on the athletic surface** from not only the athletes, but all required facility maintenance equipment as well, with no risk of sub-surface deviations telegraphing through to the surface. **The Owner/CM should provide test results & proof rolls** verifying that the subbase meets specification requirements.

FieldTurf®
A Tarkett Sports Company

Smart Buy
PURCHASING PROGRAM
FIELDTURF • BEYNON

UNDERSTANDING RS MEANS

WHAT IS RS MEANS?
A PLATFORM TO HELP ESTIMATE CONSTRUCTION COSTS

RS MEANS, a division of Reed Business Information, is a construction cost estimating tool that has been in place for over 74 years.

RS MEANS provides current, regionally-customizable data that reflects cost information to the construction industry so contractors can provide accurate estimates and projections for project costs. There are over 20 specialized cost data titles for various construction categories.

RS MEANS has become a data standard for government work in terms of pricing and is widely used by the construction industry as a whole.

RS MEANS pricing books are updated annually and have over 50,000 material and labor unit line items associated with various types of construction. The unit prices are adjusted for location/labor rates using a "City Index."

HOW DOES FIELDTURF USE RS MEANS?

FieldTurf is required to use RS MEANS on cooperative purchasing projects for any items that are not specifically line item priced through our cooperative purchasing agencies. This includes a majority of the site work and ancillary items outside of artificial turf, track or tennis surfacing.

The standardized cost data book title that is best suited to price FieldTurf site work related line items is: Facilities Construction Cost Data.

Many of the cooperative purchasing agencies in the SmartBuy portfolio require an RS MEANS summary estimate report to meet cooperative purchasing compliance for items that are not specifically listed in the FieldTurf bid response. Cooperative purchasing contracts incorporate RS MEANS language into their bid documents to meet governmental audit compliance standards and use it as a system of checks and balances for construction and site related pricing.

Sarah Morehead
503 563 6390 | Sarah.Morehead@smartbuycooperative.com

fieldturf.com

2.1.3. ***Value-Add or Additional Offering*****.** Please address any additional products and services your organization offers but is not included in the scope of this solicitation and will enhance and add value to this contract's participating agencies.	FieldTurf and Tarkett Sports offer a wide variety of value added components to the offering, including turf surface research and development, environmental advances (noted in a separate section of the bid), and several technological advances regarding the sports surfacing industry noted below: **<u>Design Build & Construction capabilities</u>** FieldTurf with Tarkett Sports has significantly increased staff to meet design build & construction demands. **<u>Technology Advancements:</u>** **FIEDLTURF Field Visualizer Tool:** We're excited to introduce our NEW FieldTurf Field Visualizer tool. You and our customers can now create their dream field and explore different sport line combinations, colors, logos and more. This has tremendous potential to excite and impress clients in the early stage of the selling process. Please take note, this is to create a sketch of the field design and is intended for illustrative purposes only. You / Customers will have the capability to download their drawing for future sharing, as the project advances. The download feature is gated for lead generation purposes. **Visit the tool:** https://fieldturf.com/en/field-visualizer/ **GENIUS** The future has arrived! Introducing FieldTurf Genius, powered by Intelligent Play. This game-changing technology is designed to help maximize the longevity, playability, and safety of your sports field. As well as allow you to track maintenance, plan more efficiently and monitor usage. Imagine a sports field that could automatically track the number of athletes playing, hours of use, and send maintenance alerts when needed. Imagine that it could then deliver in depth reporting on executed maintenance and usage, allowing you to optimize scheduling, utilization, and care. HOW DOES IT WORK? Two sensors are mounted to the facility lights or stadium press box and automatically process and convert the recordings into anonymous data for analysis. Through advanced computer vision and deep learning algorithms, live field participation is translated into tangible data. **FIELDCLEANSE SANITIZATION PROGRAM** The FieldCleanse Program, part of FieldTurf's multi-pronged service platform, is designed to increase safety measures for our clients and their athletes. FieldTurf, which for over 25 years has been recognized as the leader in artificial turf and player safety is proud to introduce the FieldCleanse program designed to elevate the cleanliness standards of our fields and to meet the new health and safety challenges presented by the recent Coronavirus (COVID-19) pandemic environment. This multi-faceted approach includes our standard guidance for Brushing, Aerating, Raking and Sweeping along with new options for those who want to sanitize their turf fields. **EPA APPROVED CORONAVIRUS (COVID-19) SANITIZER** FieldTurf's NEW FieldCleanse program will help deep clean your surface to combat COVID-19. Utilizing an EPA approved coronavirus sanitizer: mPerial ™, by MPact™ Environmental Solutions, LLC, which confirms results that demonstrates the ability of

the mPact™ technology to prevent and protect against the spread of the COVID-19 Virus.

mPerial™ PRODUCT DETAILS:

- EPA registered, FDA compliant
- EPA Registration #: 10324-59-83129

FieldTurf Innovation and Performance Center (FIPC)

It's no secret that FieldTurf pioneered what is now commonly accepted as "artificial turf." What started with our invention of long pile, infilled artificial turf has continued with numerous industry-changing innovations. Fieldturf has introduced the engineered products that are tailor made for each segment of the business and owns numerous patents that protect the company's product offering for sporting and non-sporting applications.

All of Fieldturf's systems are tested using the latest equipment in the FieldTurf Innovation and Performance Center (FIPC). Located at the company's headquarters, the center ensures that any and all of FieldTurf's existing and new systems set superior standards for performance in their respective classes.

The state-of-the art facility is one of, if not the most, advanced research laboratories in the industry. FieldTurf's development focuses on delivering safe, durable, and high-performance turf systems with great value. The FIPC helps ensure that these objectives are being met.

Penn State Center for Sports Surface Research

In July 2009, FieldTurf and Penn State joined forces to mark a historic industry-first related to sports surface safety and development- the creation of Penn State's Sport Surface Research Center (SSRC). Today, the SSRC is the longest standing University based research center in America and is regarded as one of the foremost experts in the field of agricultural sciences and has developed a strong reputation for their efforts in synthetic turf research.

WHAT Makes FieldTurf stand apart from the competition:

1. FieldTurf has a patented infill system for the highest performance that layers silica sand with cryogenic rubber. The rubber and sand particles are a similar size to stay in suspension. Total infill exceeds 9 lbs. per sq. foot on a typical FieldTurf field. The FieldTurf infill allow for optimal safety and playability. Testing proves that all rubber fields like our competitors tend to migrate easily in the rain creating divots and changes in the infill levels. This infill variation that can be found in our competitor's all rubber infill fields impacts the safety of the turf system.
2. PROVEN SAFETY: FieldTurf's focus on Safety has led to numerous injury reducing innovations and improvements. The main reason FieldTurf continues to outperform all other turf companies in reducing injury is our patented sand/rubber layered infill system. The findings of long-term testing programs show that FieldTurf is safer than any other synthetic turf system and equal to – if not better than- natural grass in most critical areas of player safety. No other company can make this claim.
3. FieldTurf fiber innovation also stands out from our competitors. Our fibers are produced at our very own facility in Germany. This state-of-the-art facility was opened in 2010 and as a result has turned FieldTurf into one of the most vertically integrated companies in the world. The quality control process at the facility

includes stringent testing of the yarn properties (tensile strength, uniformity, color verification.)

4. SURELOCK COATING- for maximum drainage. FieldTurf's patented backing offers drainage performance unequaled by any artificial turf product in the industry. A FieldTurf field is designed for all weather playability. Unlike the rest of the industry, the innovators at FieldTurf came up with a superior drainage solution for its Elite system. It's called SureLock coating. This patented system coats only the rows of fiber, leaving the rest of the carpet untouched and naturally porous.
5. MULTI-SPORT SOLUTIONS – for all sports and all levels. FieldTurf has long been the #1 choice for all sports and all levels. FieldTurf's safety, performance, and durability levels are far superior to any other system. As the world's largest synthetic turf company, you will find FieldTurf in many major stadiums, colleges, and high schools. Over 7,500 fields installed.
6. SINGLE SOURCE RESPONSIBILITY- for customer security and satisfaction. FieldTurf has brought "single source responsibility" and quality to the forefront with its own manufacturing plants and quality control standards. Integrated, vertical manufacturing has paved the road toward true innovative and customer security, with fiber manufacturing, tufting, coating and testing all done in house in FieldTurf plants.

FieldTurf is the only artificial turf company on the market to meet the most rigorous and comprehensive quality control standards:

- ISO Certified manufacturing Plants
- In-house fiber manufacturing
- In-house coating of all turf products
- In-house testing of each turf roll and its tuft bind
- Testing of infill and the verification of its grade
- Installation by FieldTurf certified installation crews.

7. INSURED WARRANTY- for complete peace of mind. FieldTurf was the first company in the industry to offer a third-party insured warranty. And while you'll probably never need to use it, you can rest easy knowing that you are protected by the industry's best warranty. It's peace of mind that sets FieldTurf apart from the competition.
8. INSTALLATION METHOD – for a stronger field. FieldTurf does not cut corners when it comes to installation of artificial turf fields. In order to lower their prices, many competing companies will cut corners on important installation procedures. This severely compromises the durability of the entire field.
    - FieldTurf has Sewn seams not glued like our competitors.
    - FieldTurf meticulously shears the fiber for inlaid sports markings- competitors cut the turf backing.
    - Precision infill layering = a safe surface
    - Experienced installation crews = quality assurance.
9. PROVEN DURABILITY- for a better investment. Since its inception, FieldTurf has proven to be the most durable and longest –lasting synthetic turf system in the marketplace having installed more fields that are currently 8 years or older than all other competitor installations combined.

10. FIRST-CLASS SERVICE – for your FieldTurf Experience. FieldTurf does not sever its customer relations once the contract has been signed. We take the time to follow up with each and every one of our customers in order to ensure complete and consistent customer satisfaction. Customer satisfaction remains FieldTurf's number one priority.

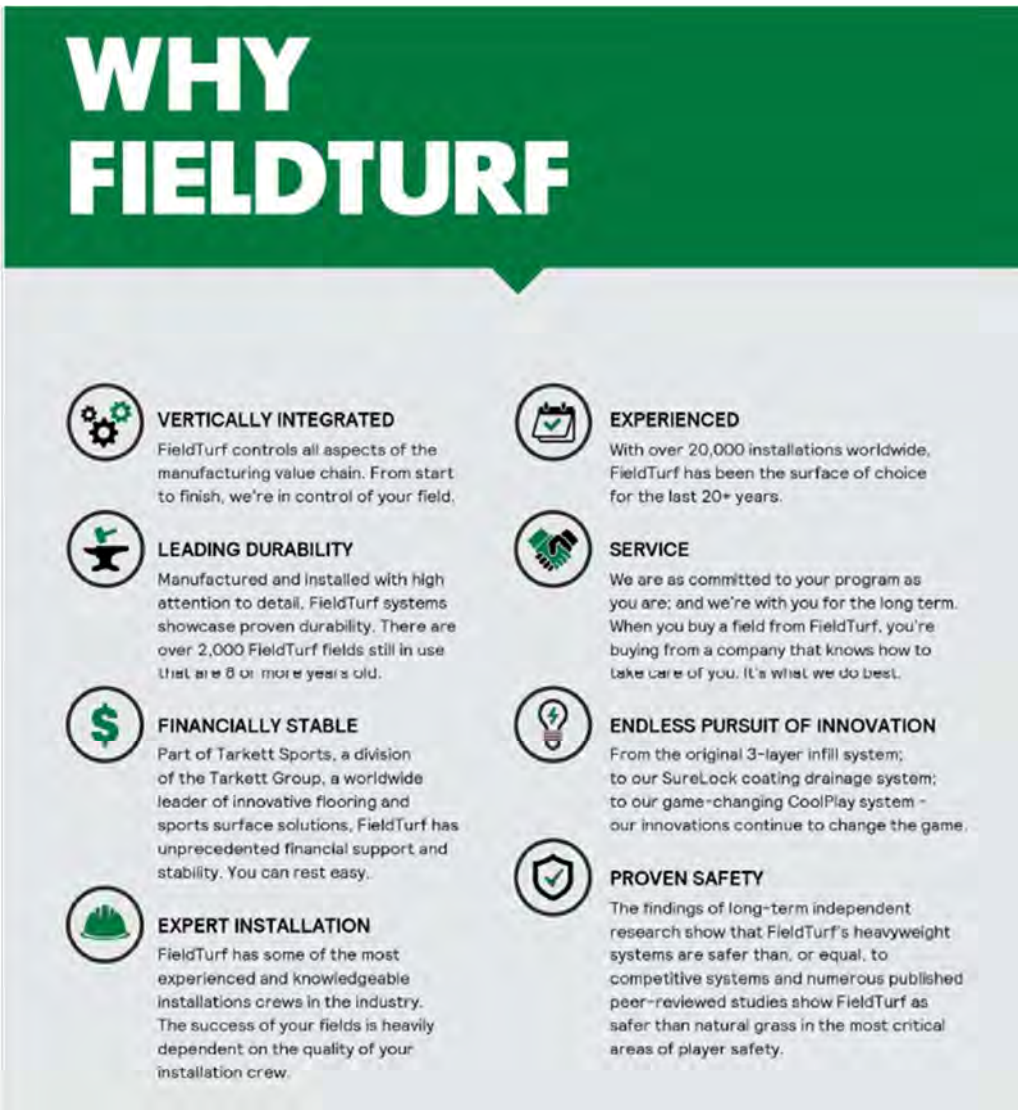

WHAT Makes Beynon Sports stand apart from the competition:

Unlike competing systems, Beynon products are resilient by formulation. The physical properties of our World Athletics Certified systems do not change as they are exposed to the elements. Competing systems can firm upon installation and tend to become harder over time as plasticizers are released from the product due to UV exposure.

If speed and performance rank at the top of your list, Beynon Sports' full pour systems have long been recognized as one of the leading tracks surfaces in North America.

Beynon Sports understands that one track does not fit all. That's why we are one of the only athletic surfacing companies that offers customizable track & field and fieldhouse surfaces with our Performance Series - BSS 1000 & BSS 2000 systems.

Our Performance Series can be TUNED to the force reduction specifications that match your desired feel under foot. Customizing your track is the key to your athletes' top performance and only Beynon Sports can achieve the force reduction range of the track and field surface to make it more forgiving for distance, or firmer for explosive events.

A few record-breaking performances of note:

- Sydney McLaughlin-Levrone set a world record in the women's 400-meter hurdles at the 2024 Olympic Trials, clocking 50.65.
- During the 2012 Olympic trials at the same Hayward track Ashton Eaton broke the world record for the Decathlon with an impressive score of 9039 points
- At the 2012 Canadian Olympic Trials Jessica Zelinka broke the Canadian Heptathlon record with a score of 6599.
- Five-time NCAA champion and 14-time all-American Galen Rupp, broke his own American record in the 10,000 meters during the Prefontaine Classic.
- Tyson Gay set a new American record on the Hayward track at the Olympic Trials during the weekend of June 27, 2008. Gay ran two memorable 100-meter times—first 9.77 seconds and then 9.68

WHY TARKETT SPORTS: FieldTurf Brings You the entire Tarkett Sports Brand…

Tarkett Sports Brand: Tarkett Sports offers a comprehensive portfolio of sports flooring solutions through its renowned brands: Tarkett Sports Indoor, FieldTurf, Beynon Sports, Renner Sports, EasyTurf/FieldTurf Commercial, Desso, GrassMaster, and PlayMaster.

Experience: With over 50,000 installations worldwide, Tarkett Sports has been the trusted surface of professional, elite, school and municipal facilities.

Design & construction experts includes design build capabilities: Tarkett Sports and our partners are some of the most experienced and knowledgeable teams in the industry. When it comes to the design and construction of your sports surface, we are the experts.

Trusted: In an industry where installation plays such a vital role, Tarkett Sports is proud to showcase one of the most experienced and knowledgeable teams available. Dedicated to training and quality standards, Tarkett Sports places high importance on ensuring its crews are knowledgeable, led and share the company's values and mission.

Financially stable: The Tarkett Group is a worldwide leader of innovative flooring and sports surface solutions. Tarkett Sports Indoor is backed by unprecedented financial support and stability. You can rest easy.

Endless Pursuit of Innovation: Continuously striving to deliver the ultimate surface experience, Tarkett Sports has positioned itself as a leading supplier of athletic surfacing in North America and abroad by offering a wide range of products including artificial, hybrid and residential turf; running tracks, tennis courts and indoor athletic surfaces. Our innovation and versatility extend beyond just sports. We're there to support your team.

Service: Simplicity is the name of the game. Why manage several suppliers when you can entrust your project to one firm. With the increased complexity and diversity of new athletic facilities, organizations are often faced with the struggle of overseeing multiple suppliers to accomplish their project.

Manufacturing Excellence: ISO 9001 certified for leadership in quality, environment and safety management systems, Tarkett Sports' facilities in Calhoun (FieldTurf, EasyTurf/FieldTurf Commercial & Tarkett Sports Indoor) Chagrin Falls (Tarkett Sports Indoor) and Hunt Valley (Beynon Sports and Renner Sports) represent three of the most advanced manufacturing operations in North America. With international manufacturing facilities in Auchel, Sedan (France), Narni (Italy), Abtsteinach (Germany), Bačka Palanka (Serbia) and Botany (Australia), Tarkett Sports showcases an extended network of production capabilities.

To accelerate our strategy **to Grow in Design & Construction, both organically and through acquisitions**, I'm happy to announce the creation of Ampere, a new Tarkett Sports brand specializing in master planning, architecture, renovations, and conceptual visualizations. This exciting initiative will be critical to establishing Tarkett Sports as a leading provider of these essential services for elite sports venues.

ELEVATE PLAY & LOWER CARBON WITH FIELDTURF CARBONCATCH

03/25/2025 • Way, Justin

At FieldTurf, innovation isn't just about performance—it's about purpose. As part of our Sustain The Game program, we're introducing a new breakthrough in sustainable design for artificial turf by integrating Enhanced Rock Weathering (ERW) into our systems. This cutting-edge, patent-pending technology passively captures carbon, helping turn every FieldTurf field into a driving force toward carbon neutrality.

DON'T JUST HOST THE GAME. SUSTAIN IT.

Every raindrop is an opportunity to capture carbon. When rainwater absorbs CO2 from the atmosphere, it becomes slightly acidic— just like how sugar dissolves into tea. But with CarbonCatch, this rain interacts with minerals, setting off a natural reaction that locks carbon away.

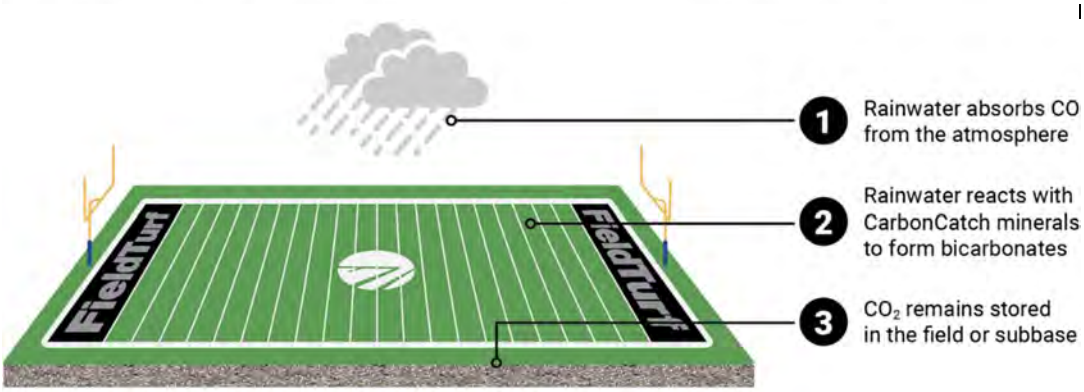

Think of it like an antacid for the planet— neutralizing acidity and transforming CO2 into stable minerals that remain safely stored. Without CarbonCatch, much of that carbon would simply evaporate back into the air. Now, your field isn't just a place to play— it's actively working to reduc greenhouse gases and support a more sustainable future for the planet and your community.

The farming industry has utilized Enhanced Rock Weathering (ERW) for over 25 years. With CarbonCatch, your FieldTurf field can capture the equivalent amount of carbon dioxide as acres of forest with no impact on the performance, durability, or drainage of the surface.

> "For years, Enhanced Rock Weathering has proven its ability to capture carbon in agriculture. Bringing this proven technology to artificial turf is testament to FieldTurf's forward-thinking approach to sustainability and innovation. This initiative redefines what a sports field can do for its community—not just as a place to play, but as an active contributor. We're excited to work with FieldTurf and see this significant step taken in t world of sports." - Bob Vasily, President & Founder, Canadian Wollastonite

	HOW IS CARBONCATCH INSTALLED? There are three ways to integrate the minerals in your FieldTurf field: 1. In the infill mix of the system – New construction or replacement 2. In the sub-base, under the carpet - New construction or replacement 3. As a topdressing – Existing installations **SUSTAIN THE GAME** FieldTurf's sustainability program, Sustain The Game, is rooted in a commitment to protect people and planet. That means our innovation isn't limited to product specs. Our promise to keep players safe on our turf has naturally evolved into an obsession — one with a singular focus to completely eliminate its potential to harm not just people but the environment, too. Now in everything we do, we strive for the lowest impact on people and the planet — from our zero turf to landfill commitment, to circular design, to the utmost care for those who play on and handle our products. Integrating ERW into our turf systems aligns with our key pillars, which keep us focused on offering purpose-led products that empower customers to make environmentally conscious choices. CarbonCatch exemplifies our drive to enhance lives within the communities where we work by conserving local ecosystems. We look forward to sharing this exciting game-changing technology and helping to make it part of your next field project. Tarkett has reached the highest level of maturity a company can achieve in the CDP. The company is now part c the top 2% best performing companies out of 24 800 companies that are assessed by CDP on climate data. CDP is a global non-profit that runs the world's leading carbon disclosure platform and is considered as the gol standard in the assessment of corporate climate strategy. Early in 2023, Tarkett's climate roadmap was approved by the Science Based Targets initiative (SBTi). Since 2023, the company is included in the annual Europe's Climate Leaders Ranking by Financial Times and Statista. In September 2024, Tarkett had achieved a Platinum Medal by sustainability rating platform EcoVadis, setting a new benchmark in the flooring and sports surfaces industry.
2.1.4. ***Open Market Products.*** Provide a detailed description of your ability to accommodate requests for Open Market Products. Open Market Products is a category of products that cannot be found in your standard catalog offering or non-inventory products. **NOTE:** For a definition of Open Market Items, please refer to **Part One, Section 5.4 – Other Pricing Scenarios.**	**Site Work:** Site Work includes but is not limited to any construction necessary to build base for Turf, Track, or Court surfaces to be placed on. New Construction – Sq. foot/yard pricing is for supply and installation of sports surfacing only. FieldTurf is prepared to offer turn-key solutions for the construction of the base of running tracks, courts, indoor flooring projects and fields through use of RS Means. The best value pricing for base or civil work is obtained through this costing method. Site work or new construction may include but is not limited to: removal and disposal of existing sports surface, lighting, demolition, excavation, rock base aggregate, top rock, asphalt, concrete, sidewalks, turf shock absorption underlayment such as e-layer or padding, tie in to existing drainage, drainage systems, conduits, fencing, crack repair, asphalt repair, etc. which can be purchased through RS MEANS. RS MEANS is self-contained and consists of a turn-key solution that includes a complete line-item listing of all the products, supplies, material, equipment, services, accessories and options with their description, specification, terms, conditions and associated pricing for each item, sub-assemblies and/or assemblies. FieldTurf reserves the right to offer a discount or "adjustment down" to the RS MEANS calculation to account for volume discounts or to stay within standard market pricing.

FieldTurf®
A Tarkett Sports Company

Smart Buy
PURCHASING PROGRAM
FIELDTURF • BEYNON

UNDERSTANDING RS MEANS

WHAT IS RS MEANS?
A PLATFORM TO HELP ESTIMATE CONSTRUCTION COSTS

RS MEANS, a division of Reed Business Information, is a construction cost estimating tool that has been in place for over 74 years.

RS MEANS provides current, regionally-customizable data that reflects cost information to the construction industry so contractors can provide accurate estimates and projections for project costs. There are over 20 specialized cost data titles for various construction categories.

RS MEANS has become a data standard for government work in terms of pricing and is widely used by the construction industry as a whole.

RS MEANS pricing books are updated annually and have over 50,000 material and labor unit line items associated with various types of construction. The unit prices are adjusted for location/labor rates using a "City Index."

HOW DOES FIELDTURF USE RS MEANS?

FieldTurf is required to use RS MEANS on cooperative purchasing projects for any items that are not specifically line item priced through our cooperative purchasing agencies. This includes a majority of the site work and ancillary items outside of artificial turf, track or tennis surfacing

The standardized cost data book title that is best suited to price FieldTurf site work related line items is: Facilities Construction Cost Data.

Many of the cooperative purchasing agencies in the SmartBuy portfolio require an RS MEANS summary estimate report to meet cooperative purchasing compliance for items that are not specifically listed in the FieldTurf bid response. Cooperative purchasing contracts incorporate RS MEANS language into their bid documents to meet governmental audit compliance standards and use it as a system of checks and balances for construction and site related pricing.

Sarah Morehead
503 563 6390 | Sarah.Morehead@smartbuycooperative.com

fieldturf.com

	MOST ASKED QUESTIONS **Q: WHAT IS RS MEANS DATA?** **A:** RS MEANS data from Gordian is the leading construction cost database. A dynamic collection of data points actively monitored by experienced Cost Engineers, RS MEANS data is used by construction professionals to create budgets, estimate projects, validate their own cost data and plan for ongoing facilities maintenance. Localized, accurate and complete, RS MEANS data is the construction industry standard. **Q: WHY DOES FIELDTURF USE RS MEANS FOR COOPERATIVE PURCHASING PROJECTS?** **A:** Cooperative purchasing agencies require RS MEANS estimates so municipalities meet procurement compliance for items that are not specifically listed in the FieldTurf bid response. Cooperative purchasing contracts incorporate RS MEANS language into their bid documents to meet governmental audit compliance standards and use it as a system of checks and balances for construction and site related pricing. **Q: WHAT CAN BE PURCHASED THROUGH RS MEANS?** **A:** The list of items municipalities can purchase through RS MEANS is extensive and includes but is not limited to: cut and fill, excavation, asphalt, lighting, fencing, sidewalks, concrete work, drainage systems, tie in to existing drainage, windscreens, aggregate base, top rock, conduits, crack repair, demolition or any other project necessary site work. **Q: HOW ARE REGIONALLY SPECIFIC LABOR COSTS ACCOUNTED FOR IN RS MEANS?** **A:** RS MEANS unit prices are adjusted for location/labor rates using regionally specific "City Index Coefficient."
2.1.5. ***Warranty.*** Provide a copy of the manufacturer's warranty. If required, please attach the warranty as an attachment, as instructed in this document. Describe notable features and/or characteristics of the warranty that a public sector customer would find interesting or appealing. Pricing related to the any extended warranty options must be included	FieldTurf's Standard Multi-Field 8-year warranty is our standard warranty. FieldTurf provides the following warranty options as well: • FieldTurf Court Warranty – 1 Year • FieldTurf Full Depth Track Warranty – 5 year • FieldTurf Warranty – 8 year • FieldTurf Warranty – 5 year • EasyField Warranty • FieldTurf CORE 10 Year Warranty Standard • FieldTurf Warranty– Baseball 5 Years • FieldTurf Warranty – Baseball 8 Years • FieldTurf Maintenance Track Warranty – 1 year FieldTurf Standard MULTI-SPORT 8 Year Warranty

in ***Attachment B – Cost Proposal***.	**BEST INSURED WARRANTY IN THE BUSINESS** It takes a lot of hard work and dedication in order to bring an artificial grass or synthetic turf system to life. The size of the investment, whether in time, energy or money, can be daunting. That's why we were the first company in the industry to offer a third-party insured warranty. And while you'll probably never need to use it, you can rest easy knowing that you're protected by the industry's best warranty in the unlikely event something goes wrong with your artificial turf system. It's piece of mind that sets FieldTurf apart. • Per Claim Limit of $33,000,000 USD • All fields are automatically covered upon issuance of the Warranty Certificate • No deductible • Pre-Paid for 8-Years The full product line warranty documents are included as an attachment to this bid. Below are a few select samples that contain language that answer the notable features and characteristics that the public sector customer would find interesting or appealing including 3rd party warranty:

FieldTurf
A Tarkett Sports Company

Manufacturer's Limited Warranty

FieldTurf warrants that if **FieldTurf (product code)** (Product) for multi-sport use synthetic turf proves to be defective in material or installation workmanship, therefore, resulting in premature wear, during normal and ordinary use of the Product for the sporting activities provided herein or for any other uses for which FieldTurf has provided its written authorization, within **five (5) years** from the date of completion of installation as indicated in this Warranty, FieldTurf shall either repair or replace the affected area of the Product in accordance with the terms of this Warranty. FieldTurf's sole liability under this Warranty shall be limited to either repair or replacement of the affected area of the Product, at its sole discretion, and FieldTurf shall have no other obligations or liabilities with respect to defects of the Product. FieldTurf will, at FieldTurf's option, either repair or replace the affected area to the extent required to meet the Warranty period, but no cash refunds will be made. This Warranty shall commence upon the date of completion indicated in this Warranty. The accompanying Warranty service will not come into effect unless and until FieldTurf's Certificate of Completion is sent for validation to the corporate office of FieldTurf indicated herein within thirty (30) days of the date of completion or Purchaser's first use, whichever occurs first. In all cases, the Warranty shall be deemed to commence upon the date of completion indicated in this Warranty. The acceptance form of the terms and conditions contained in FieldTurf's Maintenance Guidelines must also be provided to FieldTurf's corporate office within thirty (30) days of completion of installation. This Warranty is limited to the remedies of repair or replacement, which shall constitute the exclusive remedies available under this Warranty; all other remedies or recourses which might otherwise be available are hereby waived by the Purchaser. FieldTurf will have no other obligations or liability for damages arising out of or in connection with the use or performance of the Product, including, but without limitation, damages for personal injury and/or economic losses. This Warranty shall not come into effect, and FieldTurf shall have no obligations under this Warranty, unless and until FieldTurf is paid in full for the Product to be warranted hereunder.

Field Markings: (sport markings to be specified)

Other Exclusions

EXCEPT AS EXPRESSLY SET FORTH IN THE MANUFACTURER'S LIMITED WARRANTY ABOVE, FIELDTURF DISCLAIMS ALL OTHER WARRANTIES OF ANY KIND, EXPRESS OR IMPLIED, IN FACT OR IN LAW, INCLUDING, BUT NOT LIMITED TO, THE IMPLIED WARRANTIES OF MERCHANTABILITY AND FITNESS FOR A PARTICULAR PURPOSE.

THIS WARRANTY SHALL BECOME NULL AND VOID IF THE PURCHASER FAILS TO MAINTAIN THE FIELD IN ACCORDANCE WITH THE FIELDTURF MAINTENANCE GUIDELINES AND SCHEDULE PROVIDED BY FIELDTURF THEREIN. ALL MAINTENANCE SHALL BE PERFORMED BY FIELDTURF-TRAINED AND/OR FIELDTURF-AUTHORIZED MAINTENANCE PERSONNEL ONLY.

Furthermore, this Manufacturer's Limited Warranty ***does not cover***:

1. Any damage resulting, directly or indirectly, from *force majeure*, accident, misuse, intentional and unintentional abuse, infill displacement, neglect; or from usage, unintentional or otherwise, that cannot reasonably be considered as normal play or ordinary use of the Product. For purposes of this Warranty, normal play and ordinary use shall mean usage up to 3,000 hours per year of regular play and utilization for the sporting activities provided herein; normal play and ordinary use also includes a reasonable number of users or participants, but does not include repetitive marching, repetitive training or high-intensity drills on the same part of the field, especially in the areas including, but not limited to, home plate, pitcher's mound, base areas, base paths, soccer penalty mark/spot areas, goal areas, sideline areas and lacrosse crease areas, all of which require frequent maintenance in accordance with FieldTurf Maintenance Guidelines and which may require regular replacement. This Warranty is expressly conditioned upon the Customer completing and submitting the FieldTurf Maintenance Log provided in FieldTurf's Maintenance Guidelines.

7445 Côte-de-Liesse Road Suite 200, Montreal, QC, Canada H4T 1G2 • Toll Free: 1-800-724-2969 • Website: http://www.fieldturf.com

SAMPLE

FieldTurf
A Tarkett Sports Company

Manufacturer's Limited Warranty

2. Damage resulting from failure to maintain the Product in accordance with FieldTurf's Maintenance Guidelines provided to the Purchaser. The Purchaser shall keep a log of all maintenance performed on the Product and supply FieldTurf with a copy upon request.

3. Damage resulting from repair, attempted repair and/or maintenance by anyone other than FieldTurf, an authorized FieldTurf distributor or an authorized FieldTurf maintainer.

4. Damage due to causes which include, but are not limited to, the application of chemicals and/or cleaning agents, adhesive backing, dirt, traffic, negligence, vandalism, fire, flood, windstorm, animals, improper care and Acts of God.

5. Failure and/or improper design of the base; depression of the soil, subsurface or other matter upon which the base or Product rests; and any and all resulting damage to the Product arising therefrom.

6. FieldTurf does not warrant the percolation rate, long term planarity and/or compaction of the base which the product is installed. **FIELDTURF DISCLAIMS ALL WARRANTIES AS TO THE BASE, EXPRESS OR IMPLIED, AND ANY AND ALL RESULTING DAMAGE TO THE PRODUCT ARISING THEREFROM.**

7. Damage resulting from the use of improper footwear such as long-spiked track shoes, regular and repeated use of steel cleats, and flat-soled shoes. Standard molded soccer or football cleats are recommended.

All synthetic turf is subject to normal wear and tear, which does not constitute a manufacturing defect and is not covered by this Warranty. In addition to the other factors listed in this Warranty and without limitation, the extent of the wear and tear depends on the construction of synthetic turf (fiber face weight, stitch rate, fiber pile height and gauge, infill components and maintenance of the field) and the intensity of use of the synthetic turf. The Product will be stable to light fading with the maximum fading of the Product during the Warranty period not to exceed fifteen percent (15%) of color loss annually based upon an acceptable grey scale. This Warranty does not cover slight variations or gradations of color within the Product and/or face distortion. Normal behavior of the fiber and infill with respect to the wear pattern of a field is more fully explained in the "Field Settling" document, provided in the FieldTurf After-Sales Service Package.

FieldTurf disclaims all liability for incidental and consequential damages for breach of any express or implied warranty, including any implied warranty of merchantability, with respect to the Product. In the event that the Product be used for purposes other than the sporting activities provided herein or for any other uses for which FieldTurf has provided its written authorization, FieldTurf shall not be responsible for damages resulting therefrom and, therefore, this Warranty, as well as any and all applicable legal warranties, shall become **null and void** as Purchaser understands that FieldTurf has tested the Product for use in connection with the said sporting activities and/or uses, and that it may not have tested the Product for other such uses. Any Product repairs or replacements performed under the terms of this Warranty shall not extend the term of this Warranty.

Name of Purchaser:	*Sporting Activities:*	Multi-Sport Use
Date of Completion:	*Installed by:*	FieldTurf USA, Inc.
Location:	*City:*	
Address:	*Zip:*	
State:	*Fax/email:*	
Tel:		
Signature:	*Name :*	
Date:	*Reference:*	

Disclaimer. The information in this document is subject to change without notice and should not be construed as a commitment by FieldTurf USA, Inc. FieldTurf assumes no responsibility for any errors that may appear in this document.

This warranty is insured by a third party.
For more information please contact Customer Service at FieldTurf at the number listed below.
7445 Côte-de-Liesse Road Suite 200, Montreal, QC, Canada H4T 1G2 • Toll Free: 1-800-724-2969 •

SAMPLE

WARRANTOR: Beynon Sports Surfaces, Inc. ("BSS")

16 Alt Road - Hunt Valley, Maryland 21030

OWNER: ("Owner")

PROJECT: BSS(TYPE PRODUCT) Track Surface (the "Surface(s)")
Installed at

WARRANTY: BSS warrants to Owner, subject to the terms and conditions contained in this Warranty, that the above-described Surface is free from defects in materials and workmanship under normal use and service, and that the Surface was installed in accordance with the drawings, plans and specifications for the Surface.

WARRANTY PERIOD: This Warranty shall be in force for a period of five years from the Effective Date as defined below.

RESPONSE FOR WARRANTY REPAIRS: BSS agrees to perform all repairs required by this Warranty within a reasonable time upon receiving proper written notice from Owner as provided below and after BSS carries out all inspections and tests which it may deem necessary or advisable.

LIMITATIONS AND EXCLUSIONS: This Warranty does not apply to any defect, failure, damage, or undue wear in or to the Surface caused by or connected with: (a) improper or insufficient design or engineering, or improper or insufficient project drawings, plans or specifications which were not provided by BSS; (b) an inadequate or defective pre-existing base or surface under the Surface covered by this Warranty, including but not limited to separations of concrete slab(s) or deterioration of asphalt not installed by BSS ; (c) the inherent characteristics of the surface or other supporting materials upon which the Surface is installed; (d) misuse, abuse, or deliberate acts of vandalism; (e) accident, negligence, or acts of God; (f) excessive static or dynamic loads; (g) use of improper cleaning methods; (h) moisture accumulation under the Surface after installation which may cause: 1) bubbles under the Surface, 2) adhesion problems or failures, or 3) other problems or failures not related to defects in materials; or (i) Owner's failure to care for and maintain the Surface in accordance with BSS's written instructions.

This Warranty does not cover any staining, discolorations, or other damage caused by excessive moisture from such things as flooding, plumbing and appliance leaks, or other water leakage. BSS does not warrant or guarantee the accuracy or sufficiency of any drawings, plans or specifications not prepared by BSS and which were used in connection with installing the Surface. This Warranty shall not apply to the Surface, or any part thereof, which has been repaired or altered without BSS's prior written consent. No allowance or credit will be granted for any repairs or alterations to the Surface made by Owner except as authorized by this Warranty.

THIS WARRANTY IS EXPRESSLY IN LIEU OF ALL OTHER WARRANTIES, EXPRESS, IMPLIED OR ARISING BY OPERATION OF LAW, INCLUDING (BUT NOT LIMITED TO) ANY IMPLIED WARRANTIES OF

SAMPLE

MERCHANTABILITY OR FITNESS FOR A PARTICULAR PURPOSE AND OF ALL OTHER OBLIGATIONS OR LIABILITIES ON BSS'S PART. BSS SHALL NOT BE LIABLE FOR ANY INCIDENTAL, CONSEQUENTIAL, SPECIAL OR INDIRECT DAMAGES UNDER THIS WARRANTY, INCLUDING BUT NOT LIMITED TO ANY ACTIONS ALLEGING DAMAGES UNDER TORT, CONTRACT OR STRICT LIABILITY. THIS WARRANTY SHALL BE VOID IF CONTRACTOR HAS NOT BEEN PAID IN FULL FOR ITS WORK.

BSS'S SOLE OBLIGATION UNDER THIS WARRANTY IS TO REPAIR OR REPLACE AT ITS SOLE DISCRETION ALL OR ANY PORTION OF THE SURFACE WHICH MAY BE DETERMINED TO BE DEFECTIVE. BSS'S LIABILITY FOR ANY SUCH REPAIR OR REPLACEMENT SHALL IN NO EVENT EXCEED THE AMOUNT OF THE PURCHASE PRICE ATTRIBUTABLE TO THE DEFECTIVE PORTION OF THE SURFACE WHICH IS REPAIRED OR REPLACED.

BSS neither assumes nor authorizes any person to assume for it any other liability in connection with the sale, installation or use of the Surface. This Warranty shall not be construed to be an obligation of any performance or other bond furnished by any party in connection with BSS's contract for the Surface and shall not be enforceable against any such party. Labor and materials needed for any repair work not covered by this Warranty will be billed to Owner at BSS's regular hourly rates and materials charges.

WARRANTY DISCLAIMER ON PRE-EXISTING BASE AND UNDERLYING SURFACE COATING: All pre-existing base and surface coating (if any) upon which the new BSS Surface has been installed is specifically excluded from any coverage under this Warranty. BSS's previous acceptance of any such pre-existing base or surface coating for installation of the Surface shall not be deemed to constitute a warranty or other guaranty thereof. Depressions in any pre-existing base or surface coating have been patched by BSS only as specified in the written plans and specifications for the Surface. Owner further acknowledges and agrees that any damage caused to the Surface by (a) any pre-existing base or surface coating and (b) any cracks which are now in or which may develop hereafter in the pre-existing base or surface coating are specifically excluded from any coverage under this Warranty.

MAINTENANCE INSTRUCTIONS: BSS has supplied Owner with a copy of the written Maintenance Instructions containing directions for the care and maintenance of the Surface. Owner acknowledges receipt of said Instructions and agrees to comply with and carry out the directions contained in it as a condition of this Warranty. The terms of the Instructions are incorporated in this Warranty by reference.

CLAIMS: All claims by Owner under this Warranty must be made in writing to the following address within thirty calendar days after Owner learns of any defect giving rise to the claim: Contract Administrator, Beynon Sports Surfaces, Inc., 16 Alt Road, Hunt Valley, MD 21030.

INSPECTION AND TESTS: BSS shall be allowed to inspect the Surface during reasonable business hours regarding any claim which Owner makes under this Warranty; to be present at and to analyze the results of all tests conducted by Owner or others; and to conduct such tests as BSS in its discretion may deem advisable. Owner shall promptly furnish BSS with a copy of all written reports of any tests performed by Owner or on Owner's behalf. BSS shall not be responsible for any costs or expenses incurred by Owner or others with respect to such tests, except that BSS shall pay for the costs of all tests and analyses conducted or directed by BSS's representatives.

SAMPLE

EFFECTIVE DATE: The Effective Date of this Warranty is

GOVERNING LAW: This Warranty shall be governed by and interpreted in accordance with the laws of the State of Maryland.

SAMPLE

("Owner")	**Beynon Sports Surfaces, Inc.** **16 Alt Rd** **Hunt Valley, MD 21030**
By: _____	By: _____ **Drew Beynon**
Title: _____	Title: Chief Operating Officer
Date: _____	Date: _____

Tarkett SPORTS | THE ULTIMATE SURFACE EXPERIENCE

MANUFACTURER'S LIMITED WARRANTY

WARRANTOR: FieldTurf, USA Inc.
175 N Industrial Boulevard NE
Calhoun, Georgia 30701
USA

OWNER: **("Insert Owner's Name and Address")**

SURFACE: **OMNISPORTS 7.1mm (" S u r f a c e ")**

WARRANTY DESCRIPTION AND WARRANTY PERIODS:

LIMITED PRODUCT DEFECT WARRANTY: FieldTurf USA, Inc. ("FieldTurf") warrants to Owner, subject to all terms and conditions contained in this Warranty, that the above-described Surface is free from defects in materials and workmanship under normal use and service, as long as the Surface was installed in accordance with the Installation Systems section of this Warranty, FieldTurf installation guidelines, and drawings, plans and specifications for the Surface. The Limited Product Defect Warranty shall be in force for a period of fifteen (15) years from the Effective Date as defined below.

LIMITED WEAR WARRANTY: FieldTurf warrants to Owner, subject to all terms and conditions contained in this Warranty, that there will be no wear-through of the Surface's wear layer under normal use and service, as long as the Surface was installed in accordance with the Installation Systems section of this Warranty, FieldTurf installation guidelines, and drawings, plans and specifications for the Surface. For purposes of the Limited Wear Warranty, "wear-through" refers to the top layer of the Surface and means a complete loss of the wear-layer so that the printed layer (pattern or color) is materially changed or affected. The Limited Wear Warranty only shall be in force for a period of fifteen (15) years from the Effective Date.

LIMITED MOISTURE WARRANTY: FieldTurf warrants to Owner, subject to the terms and conditions contained in this Warranty, that the above-described Surface shall free from defects caused by subfloor moisture, as long as the Surface was installed in accordance with the Installation Systems section of this Warranty, FieldTurf installation guidelines, and the building or structure in which the Surface is installed maintains a relative humidity ("RH") level (according to ASTM F2170) as provided in the Installation Systems section of this Warranty, at all times during the Warranty period. This Limited Moisture Warranty shall be in force for a period of ten (10) years from the Effective Date as defined below.

RESPONSE FOR WARRANTY REPAIRS: FieldTurf agrees to perform all repairs required by this Warranty within a reasonable time upon receiving proper written notice from Owner as provided below and after FieldTurf carries out all inspections and tests, which it may deem necessary or advisable. Any required repair work shall be initiated by FieldTurf within a reasonable time after FieldTurf's receipt of Owner's written notice requesting such repairs. FieldTurf's sole liability under this Warranty shall be limited to either repair or replacement of the affected area of the Surface, at its sole discretion, and FieldTurf shall have no other obligations or liabilities with respect to defects of the Surface.

LIMITATIONS AND EXCLUSIONS: This Warranty does not apply to any defect, failure, damage, and/or accelerated, undue or excessive wear in or to the Surface caused by or connected with: (a) the installation process of the Surface on the Owner's subfloor surface; (b) improper or insufficient design or engineering, or improper or insufficient project drawings, plans or specifications; (c) an inadequate

For more information please contact the Indoor division of FieldTurf at 888-364-6541.

SAMPLE

or defective pre-existing subfloor or surface; (d) the inherent characteristics of the earth and/or surface upon which the Surface is installed; (e) misuse, abuse, or deliberate acts of vandalism; (f) accident, negligence, or acts of God; (g) static or dynamic loads exceeding FieldTurf's recommendations; (h) use of improper cleaning methods; (i) the introduction or accumulation of moisture around or under the Surface beyond the tolerances permitted by FieldTurf's installation guidelines; (j) high moisture and/or other adverse conditions; (k) Owner's failure to care for and maintain the Surface in accordance with FieldTurf's Maintenance Manual and other written instructions; (l) use which is not generally accepted as a typical use of the Surface; (m) improper installation; (n) improper protection from excessive loads; and/or (o) floods and/or other events introducing water to the Surface.

Furthermore, this Warranty ***does not cover nor will be FieldTurf be liable for*** (1) damages due to personal injury; (2) change of the Surface appearance due to excessive ultraviolet (UV) exposure and/or or heat; (3) damage due to unpredictable and/or unknown causes;(4) damage and/or performance reductions due to improper control of atmospheric soiling and/or contamination; (5) stains and/or discoloration of the Surface; and (6) costs associated with the temporary and/or permanent closing of the facility in which the Surface was installed. FieldTurf does not warrant or guarantee the accuracy or sufficiency of any drawings, plans, or specifications not prepared by FieldTurf and which are used in connection with installing the Surface. This Warranty shall be of no force and effect if FieldTurf is not paid in full for the Surface and FieldTurf's obligations under this Warranty are expressly contingent upon FieldTurf being paid in full for the Surface.

This Warranty shall not apply to the Surface, or any part thereof, which has been repaired or altered without FieldTurf's prior written consent. No allowance or credit will be granted for any repairs or alterations to the Surface made by Owner except as authorized by this Warranty.

THIS WARRANTY IS EXPRESSLY IN LIEU OF ALL OTHER WARRANTIES, EXPRESSED, IMPLIED OR ARISING BY OPERATION OF LAW, INCLUDING (BUT NOT LIMITED TO) ANY IMPLIED WARRANTIES OF MERCHANTABILITY OR FITNESS FOR A PARTICULAR PURPOSE AND OF ALL OTHER OBLIGATIONS OR LIABILITIES ON FIELDTURF'S PART. FIELDTURF USA, INC. SHALL NOT BE LIABLE FOR ANY DAMAGES UNDER TORT, CONTRACT OR STRICT LIABILITY AND/ OR INCIDENTAL, CONSEQUENTIAL, SPECIAL OR INDIRECT DAMAGES UNDER THIS WARRANTY.

FIELDTURF'S SOLE OBLIGATION UNDER THIS WARRANTY IS TO REPAIR OR REPLACE AT ITS SOLE DISCRETION ALL OR ANY PORTION OF THE SURFACE WHICH MAY BE DETERMINED TO BE DEFECTIVE. FIELDTURF'S LIABILITY FOR ANY SUCH REPAIR OR REPALCEMENT SHALL IN NO EVENT EXCEED THE AMOUNT OF THE PURCHASE PRICE ATTRIBUTABLE TO THE DEFECTIVE PORTION OF THE SURFACE WHICH IS REPAIRED OR REPLACED.

MAINTENANCE INSTRUCTIONS: FieldTurf has made available or supplied Owner with a copy of the Maintenance Manual containing written instructions for the care and maintenance of the Surface. Owner acknowledges receipt of said Maintenance Manual and agrees to comply with and carry out the instructions contained in it as a condition of this Warranty. The terms of the Maintenance Manual are incorporated in this Warranty by reference. If a Maintenance Manual is not received by Owner at the time of issuance of this warranty, it is the owner's obligation to request and maintain record of receipt.

CLAIMS: All claims by Owner under this Warranty must be made in writing to the following address within thirty calendar days after Owner learns of any defect giving rise to the claim: FieldTurf USA, Inc. Indoor Division, 175 N Industrial Blvd. Calhoun, Georgia, 30701.

INSPECTIONS AND TESTS: FieldTurf shall be allowed to inspect the Surface during reasonable business hours regarding any claim, which Owner makes under this Warranty; to be present at and to analyze the results of all tests conducted by Owner or others; and to conduct such tests as FieldTurf in

For more information please contact the Indoor division of FieldTurf at 888-364-6541.

SAMPLE

3. Business Operations

3.1. Logistics

3.1.1. ***Distribution & Shipping Capabilities.*** Describe how supplier proposes to distribute the products/ services in Respondent's defined geographic reach. Your response may include, but is not limited to, information related to the number of store or showroom locations, distribution facilities, supply chain partners, fill rates, on-time delivery rates, and your ability	Lead time: Minimum 30 days, due to many reasons schedules are always case by case and 30 days cannot be guaranteed. Shipping costs are included in our customer proposals. Shipping to Alaska or Hawaii can cause the shipping price to rise as noted on our pricing notes. Shipping and Freight to Canada, Hawaii, Alaska or other areas outside of the continental US is not included in standard. Primary pricing and will be an additional cost based on site location. Additional shipping costs will be based on the cost to transport equipment and materials from the closest US port to the job site. Additional costs may also be added for crew transportation and accommodations to any site outside of the continental US. Packaging: Turf Rolls are packaged in plastic wrap and floor loaded onto trailers. We do ship some other materials that are palletized and shrink wrapped. Delivery: The delivery is clearly communicated between FieldTurf and the customer. These delivery date & time would be at the customer's choice and approval. Shipping and delivery timing is communicated when we book a shipment. All necessary parties are included in that communication. For truckload shipments, drivers and/or dispatchers also reach out to the receiving party to schedule via phone call. FieldTurf manufactures each product it offers. FieldTurf controls all aspects of the manufacturing value chain. From start to finish, we're in control of your field.

to accommodate expedited orders.	FieldTurf products are manufactured in Calhoun, GA then distributed to the warehouses in CA, OR, TX. Beynon products are manufactured in Hunt Valley, Maryland and distributed to warehouses in CA, OR, TX, GA.
3.2. Customer Service	
3.2.1. ***Customer Service Department***. Describe your company's customer service department & operations. Your description may include, but is not limited to, hours of operation, number and location of service centers, parts outlets, number of customer service representatives. Clarify if the service centers are owned by your company of if they are a network of subcontractors.	FieldTurf: Maintenance & Commitment to Service Hours of Operation: 24 hours/ 7 days a week We respond to customers within 24 hours. Should something be an emergency, we do try to get on site ASAP - weather and crew availability permitting. We will evaluate the nature of the complaint and see how we can assist or fix the issue. If there is an unresolved complaint that we cannot resolve, we would direct the customer to the appropriate department/manager. Both FieldTurf and Beynon have 10-15 customer service teams across the nation and regionally. *Customer & Support Manager:* Thomas Mullins, Vice President of Installations 706-280-6548 thomas.mullins@tarkettsports.com FieldTurf does not sever its customer relations once the contract has been signed. Providing a high-quality product and outstanding customer service has been a part of FieldTurf's successful business model since Day One. Our customers are our number one priority, which is why we have taken the time to assemble an experienced and dedicated customer service department. We proactively follow up with each and every one of our customers to ensure complete and continuous satisfaction. In addition to our constant commitment to exceptional customer care, our customer service department has assembled a comprehensive manual that covers all field care issues. Each FieldTurf customer receives a maintenance guideline that covers everything from field grooming to gum removal, and field protection. The guidelines also come with a complete maintenance video – the perfect tool to educate field managers and groundskeepers. There are not any geographic regions of the US that FieldTurf cannot provide a certified technician to perform warranty work. Please see our Customer Service Representative Region map below to see that the entire US is covered.

3.3. Customer Set Up; Order & Invoice Processing; Payment	
3.3.1. ***Proposal Development, Order, and Invoice Process.*** Describe your company's proposal development, order, and invoice process.	• Client/ owner/ owner's representative makes contact with FieldTurf or Beynon Sports. • FieldTurf or Beynon Sports Representative (or authorized representative) sets up a site visit. • A FieldTurf/ Beynon Sports/ Equalis proposal is produced for review by the client/owner/owner's representative. • Proposal is reviewed and if changes or additions are needed, they are completed. • Once approved the client/ owner/ owner's representative sends FieldTurf or authorized representative a PO

	• A sales agreement, AIA contract or similar form of agreement is entered into (owner's choice if they want a contract at all or if they only want to issue a PO.) • Construction begins with progress payments throughout. • Schedule of Values can be provided for customer. • Construction is substantially complete and 100% of the contract price (including any retention) is acquired. • Equalis is remitted their fee for the project. • Project is closed. As part of the Tarkett Group, FieldTurf USA, Inc. has the ability to produce a variety of reports including but not limited to: • Private client lists • Federal client lists • National Sales (annual) • Sales by Agency (co-op, city, state, school district, etc.) • Quarterly sales reports by region, state, product type, etc. • Annual Sales reports by region, state, product type, etc. • Outstanding billings • Subcontractor reports and billings • Activity reports • Pipeline reports (upcoming project info) In summary, FieldTurf has the capability to produce necessary reports, as needed. No Quick Payment Discounts. FieldTurf does accept ACH Transactions. Payment terms are Net 30 and FieldTurf's preferred payment terms are as follows: (i) 50% of the Price upon Customer's execution of contract; (ii) 40% of the Price upon shipment of materials from FieldTurf's manufacturing facility; and (iii) Remaining balance of ten percent (10%) upon substantial completion of the field, which shall be achieved when Customer is able to use the field for its intended purpose, even if punchlist items remain and the Certificate of Completion has not been executed by Customer. Accounts overdue beyond 30 days of invoice date will be charged at an interest rate of 10% per annum.
3.3.2. ***Financing.*** Does your company offer any financing options or services? If yes, describe the financing options available to Members.	FieldTurf FINANCIAL – Municipal Financing options. FieldTurf Financial offers FieldTurf clients customized financing through TCF Capital Solutions. Our mission is to provide overall fiscal financing solutions to help you achieve your unique budget objectives and meet fiscal requirements. We aim to provide our clients the opportunity to use and own a premium artificial turf system with monthly payment and tailored financing solution to meet your needs. FieldTurf has chosen to work with TCF Capital Solutions, a leader in financing, to provide customized and comprehensive budget and payment solutions for FieldTurf products and projects.

Tarkett SPORTS | CAPITAL

OPTIMIZE YOUR BUDGET

With Tarkett Sports Capital, you begin saving from day one. Our payment program allows you to retain your cash while your sports surface generates savings to help cover the monthly, quarterly or annual payment.

PRESERVE BANK CREDIT LINES

Payment solutions generally don't affect your current borrowing limits with your bank. You can still utilize credit lines for other needs, such as working capital.

PAYMENT SOLUTIONS INCLUDE ALL ANCILLARY COSTS

You can finance the system, site preparation, sub-base, and other additional items.

IMPROVED CASH FLOW

Not only can you improve cash flow right from the start by keeping your cash reserves, but after your final payment you own the surface and may continue to benefit from ongoing revenue generation.

RENTAL REVENUES COULD PAY YOUR MONTHLY PAYMENT

Let your system pay for itself on a real-time basis to help cover your monthly payments.

MUNICIPALITIES & EDUCATION:

Tarkett Sports' Municipal & Education Payment Program is tailored to meet the needs and requirements of municipalities, public and private school systems, allowing flexible and efficient operations.

KEY BENEFITS INCLUDE:

- Payment program for entirety of the project
- Fast, easy application process
- 12 to 96-month terms
- Superior systems and support for efficient billing and collecting
- Ability to cancel in the event of non-appropriation of budget funds*
- Interest may be exempt from federal and state income tax*
- Generally not subject to state bid laws*

*Not applicable for private school systems

All payment programs are subject to credit approval by Tarkett Sports Capital. Any program, pricing and other ancillary terms and conditions are subject to change without notice. This is not a commitment or offer to lend by Tarkett Sports Capital. The information contained in this marketing piece is provided as general education material, and does not constitute the recommendation of or advice with respect to, any particular transaction, financing or issuance of municipal securities.

Tarkett SPORTS | CAPITAL

Tarkett Sports Capital offers clients customized payment programs. Our mission is to provide overall fiscal financing solutions to help you achieve your unique budget objectives and meet fiscal requirements. We aim to provide our clients the opportunity to use and own a premium sports surface system with various payment terms to meet your needs.

Tarkett Sports Capital provides customized and comprehensive budget and payment solutions for our entire portfolio of surfaces and systems.

Tarkett Sports Capital offers exclusive payment programs for Tarkett Sports customers, including public, private, and non-profit organizations.

TARKETT SPORTS CAPITAL SOLUTIONS

- Make the most of your budget with total project solutions, including complete project design, construction and integration costs
- Ease the costs of your project with monthly, quarterly or annual payments that match the timing of fiscal budgets
- Costs are aligned to the systems useful life, allowing the playing surface to pay for itself over time
- Generally compatible with municipal financing annual budget appropriation requirements
- Helps hedge inflation by budgeting today's costs to current revenues and tomorrow's costs to future revenues
- Efficient payment solution allocated over multiple budget periods

THE SOLUTION FOR YOUR ENTIRE PROJECT

From single-facility turf and track projects to colossal multi-application sports complexes, we have a comprehensive portfolio of surfacing systems to answer all your needs. The Tarkett Sports family showcases industry-leading brands specialized in their application.

Meet our family.

FieldTurf®
A Tarkett Sports Company

APPLICATIONS: Artificial Turf - Sports
PROJECTS: +25,000
SYSTEMS: Football, Soccer, Baseball, Softball, Rugby, Lacrosse, Field Hockey and Multi-Use.

A leader in artificial turf, FieldTurf is the trusted choice of professional franchises, powerhouse collegiate programs, elite high schools and municipalities. FieldTurf systems have been proven to deliver leading performance and safety for over 20 years.

BEYNON®
A Tarkett Sports Company

APPLICATIONS: Running Track
PROJECTS: +6,500
SYSTEMS: Outdoor track, indoor track, hydraulic banked track, permanent banked track and gymnasiums.

Beynon Sports is the premier choice for track & field surfacing. With the most World Athletics Certified Class I Facilities in the U.S., Beynon Sports is the trusted choice of Hayward Field, powerhouse collegiate programs, elite high schools and municipalities. Beynon Sports' specialized high-performance synthetic athletic surfaces are designed for speed, competition, and daily training.

Tarkett SPORTS INDOOR

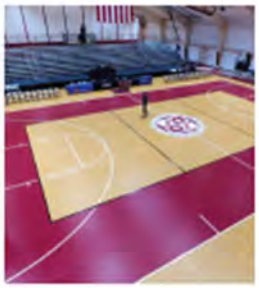

APPLICATIONS: Athletic Flooring
PROJECTS: +5,000
SYSTEMS: Basketball, volleyball, badminton, gymnasiums, fitness and dance.

Tarkett Sports Indoor offers leading surfacing systems for athletic flooring. Leaders in vinyl, wood and polyurethane, Tarkett Sports Indoor can help provide the right flooring solution and design. The systems are certified by leading institutions for air quality and sustainability. Designed for performance, safety and easy maintenance, Tarkett Sports Indoor delivers an unmatched surface experience.

"Offering our clients a turnkey solution is at the core of our values. These projects are costly, complex, and important purchases for our clients. We pride ourselves on offering innovative products and value to our customers, all while making the entire process easy."

Eddy Schmitt, President & CEO – Tarkett Sports

renner
A Tarkett Sports Company

APPLICATIONS: Sports fields, running tracks, & racquet courts
PROJECTS: +6,000
SYSTEMS: Post-tensioned concrete base construction.

Renner Sports specializes in post-tensioned concrete base construction for courts, tracks, and fields. Based in Denver, CO, Renner Sports is a leader in post-tensioned concrete, and their experience and expertise deliver an unmatched quality and experience.

Tarkett SPORTS
CONSTRUCTION

APPLICATIONS: Civil construction
SYSTEMS: Base construction, walkways, parking areas and most ancillary facility areas.

Tarkett Sports Construction helps bring your facility to life. Offering leading civil construction expertise and experience, our team helps lead and guide your project from start to finish. From you sport field to walkways and more, Tarkett Sports Construction has the knowledge and proven results to deliver true value for your program.

CLASSIC TURF
A Tarkett Sports Company

APPLICATIONS: Sports fields, running tracks, & racquet courts
PROJECTS: +500
SYSTEMS: Post-tensioned concrete base construction.

Classic Turf specializes in post-tensioned concrete base construction for courts, tracks, and fields. Based in Woodbury, CT, Classic Turf is a leader in post-tensioned concrete, and their experience and expertise deliver an unmatched quality and experience.

The brands and segments mentioned herein all form part of the Tarkett Sports division, and the respective legal entities are hereby doing business as Tarkett Sports Capital.

3.4. Bonding Capabilities	
3.4.1. ***Bonding***. Describe your company's bonding capacity. Your response may include, but is not limited to, the bonding company's surety rating.	FieldTurf is owned by Tarkett Group. See Bonding letter below for additional details.

McGriff SURETY

February 05, 2025

Re: Fieldturf USA, Inc.

To Whom It May Concern:

Please be advised that Federal Insurance Company, a member of the Chubb Group of Insurance Companies, currently has the privilege of bonding Fieldturf USA, Inc. They are licensed and authorized to do business in all states. They have a Treasury Listing of $462,516,000 and are rated A++ (Superior) with financial size category XV by A. M. Best.

Federal Insurance Company has extended surety credit to Fieldturf USA, Inc. in an aggregate amount of $250,000,000 with a single job limit of $30,000,000. However, these numbers do not represent the largest amount the surety would consider. Fieldturf USA, Inc. is completing all current projects in a satisfactory manner.

It is our understanding that Fieldturf USA, Inc. has or will be submitting a proposal to you. We anticipate no problem in providing, should they be awarded, a 100% Performance and Payment in the full amount of the proposal. As always, the surety reserves the right to perform normal underwriting at the time of any bond request, including without limitation to, prior review and approval of relevant contract terms and conditions, bond forms, appropriate contract funding and any other underwriting considerations at the time of the request. Our consideration and issuance of bonds is a matter solely between Fieldturf USA, Inc. and ourselves, and we assume no liability to third parties or to you by the issuance of this letter.

We appreciate having the opportunity to share with you our experience with this fine company and urge you to give them every consideration. Please contact me should you have any questions regarding this valued customer.

Very truly yours,

Jeffrey M. Wilson
McGriff Insurance Services, LLC

2000 International Park Drive, Suite 600 | Birmingham, AL 35243

McGriff Insurance Services, LLC.

3.5. *Sustainable Company Initiatives*	
3.5.1. ***Sustainability, Reclamation, and Recycling Initiatives.*** Describe the ways in which your company is addressing the issue of sustainability.	**FieldTurf's Commitment – Sustain the GAME…** **Building for tomorrow. It's our Sustainability commitment.** That means our innovation isn't limited to product specs. Our promise to keep players safe on our turf has naturally evolved into an obsession — one with a singular focus to completely eliminate its potential to harm not just people but the environment too. Now in everything we do, we strive for the lowest impact on people and the planet. **People. Planet. Period. Our Sustainability is focused:** We Conserve Water-Water is essential to life and a human right, and its stewardship is core to our sustainable strategy. From manufacturing to installation, our products address water efficiency, scarcity, and quality. **We Build for the Future:** We focus on efficient production, reducing the environmental impact of our own operations, and achieving the highest quality manufacturing certifications. (ISO 9001-2015, ISO 14001-2015, ISO 45001-2018. **We Use Sustainable Materials:** We innovate our choice of product components and materials using closed-loop design thinking that respects works and the planet, resulting in a more sustainable product, and the only artificial turf product to obtain Cradle to Cradle™ Bronze certification. **We Nurture Human Potential:** People are central to what we do. We make unlocking their innate talents a focus, ensuring they have the agency to take action and fulfill their potential, and we motivate them through transparency and open communication. **We Safeguard Athletes:** We were founded with the promise to make athletes safer during the game- and now we extend that promise to all the lives we touch through rigorous safety testing, product performance, and respect for the wellbeing of our people and our communities. **The Solution? Artificial Turf!** If you want to find an alternative to pesticides but don't want to sacrifice having a gorgeous lawn free of insects – artificial grass is your environmentally friendly answer! Because synthetic turf doesn't grow and is therefore inhospitable to pests, you won't need weed killers, herbicides, or pesticides. **Running Track, Tennis & Athletic Courts** FieldTurf USA, Inc. and Beynon Sports Surfaces are industry leaders in LEED certifications and environmental initiatives. FieldTurf has recycled many fields using the raw materials to create many other products including school bags, coasters and even T-shirts. The "green machine" is a patented device that physically separates the needed raw materials for re-processing and eventual integration into new products.

How FieldTurf is good for the Environment

Believe it or not, it *is* easy being green. Reducing your shower time by just one minute can save 365 gallons of water a year. Not hosing down your patio or driveway can save 960. And filling your bathtub up halfway can save 3,650. Just imagine how much water installing a FieldTurf artificial grass or synthetic turf system can save.

Actually, you don't have to imagine. Installing a FieldTurf artificial grass system for home landscaping alone can save a whopping 56,000 gallons of water per year. And on an average-sized sports field, that number skyrockets to millions of gallons per year.

When it comes to carbon footprints, there's simply no comparison between natural grass and FieldTurf artificial grass and synthetic turf systems. FieldTurf is lead free and 100% recyclable. We are a proud member of the U.S. Green Building Council and the Environmental Protection Agency's 'Greenscapes' program in addition to continuously setting new environmental standards throughout the synthetic turf industry.

FieldTurf innovates our choice of product components and materials using closed-loop design thinking that respects works and the planet, resulting in a more sustainable product, and the only artificial turf product to obtain Cradle to Cradle **™ Bronze certification.**

By choosing FieldTurf artificial turf, you're becoming part of an environmental movement that not only saves clean drinking water, but also:

- Eliminates impact on water resources
- Eliminates the use of billions of pounds of harmful pesticides, fertilizers, fungicides and herbicides, used on natural grass, that can run off into ground water
- Significantly lowers the use of natural gas and other fossil fuels needed to produce lawn care chemicals
- Eliminates fuel-powered mowing, aerating, and re-seeding. Gas-powered lawn mowers alone can cause as much pollution in one hour as 10 cars. FieldTurf systems save millions of gallons of gas a year.
- Eliminates grass clippings that are among the biggest landfill contributors to the greenhouse effect. During the summer months, clippings alone can account for nearly half of a community's waste.
- Drastically lowers the use of paper and plastic products that support maintenance
- Removes millions of tires from landfill sites each year
- Can contribute toward numerous Leadership in Energy and Environmental Design (LEED) credits
- Is less likely to provoke asthma or allergy attacks
- Is not a breeding ground for the MRSA (staph) bacteria

We Even Recycle…

When a FieldTurf installation finally comes to the end of its long life – it continues to help our planet. FieldTurf is 100% recyclable, and we were the first company in the industry to remove entire systems and recycle them.

FieldTurf systems have become "new" materials for:

- School bags
- Batting cages

- Barn mats
- Top dressing for natural grass
- Lining for highway barrels and backing for road bases
- Tote bags
- T-shirts

Proven Safe for the Environment

The environmental benefits of artificial grass have been well documented for years. Hundreds of studies have been completed to discover the truth about any potential risks of artificial turf. Government health ministries and environmental bodies around the world have commissioned extensive research. So have world health organizations, leading universities and independent scientific committees. Elected officials have reacted to the concerns of their constituents by commissioning studies to get the facts – and each time artificial turf has been found to be safe.

Occasionally, groups opposed to artificial turf systems will use creative tactics to make it seem like it they are unsafe or untested – this simply is not true. There has been extensive testing, and ample research is available. You can read what the experts have to say in independent testing, studies and reports on the potential health and environmental impact of artificial turf by downloading this collection of the actual research and conclusions.

The chain reaction of pesticide runoff might go something like this: Well water used by farmers may contain toxins, the well water is consumed and used to water crops, and the crops are then sold to the public. Pesticides have been linked to birth defects and cancer, and the United States has a long history of heavy spray usage. It's vital to be mindful of our own pesticide usage and consider other alternatives, such as artificial grass, to reduce the negative impact of pesticides on the environment.

Running Track, Tennis & Athletic Courts

Every Beynon track is manufactured in our ISO 9001 certified headquarters in Hunt Valley, Maryland, USA.

Environmental Partners

Beynon Sports Surfaces maintains its awareness in the green market place by being actively involved with organizations such as:

- USGBC (US Green Building Council)
- ASTM (American Standard testing Methods)
- FSCT (Federal Society of Coatings Technology)
- ACS (American Chemical Society)
- SPE (Society of Plastic Engineers

How Beynon is good for the Environment

Beynon Sports Surfaces is committed to not only living up to environmental standards but exceeding them. We lead the industry in research and development to bring our clients the most environmentally friendly products available by using natural polyols and renewable resources as well as removing hazardous materials.

Every product designed and manufactured and every athletic surfacing and running track system installed by Beynon Sports Surfaces contains no heavy metals, by design. This

means that every product formulated by Beynon Sports Surfaces is zero-mercury or mercury free.

Our eco-components and research and development initiatives include:

- **100% SOLIDS PRIMER** - A two-component primer formulated for use on concrete substrates. Zero solvents are added. The primer is based on a new technology utilizing cashew oil.
- **ALIPHATIC COATINGS** - Beynon Sports Surfaces manufactured and supplied coatings exceed all federal and state regulations for volatile organic compounds (VOC).
- **100% SOLIDS 1-C SPRAY** - Beynon Sports Surfaces is the only manufacturer to supply a 100% solids structural spray, thus eliminating exposure to solvents.
- **WATER-BASED 1-C SPRAY** - A superb polyurethane spray coating for use in the application of texturing layers with no free isocyanate. Made without harmful chemicals, it's ideal for use around turf fields and enclosed areas BEYPUR 160. The best way to improve times and the environment.
- **BEYPUR 250 - 2-C** urethane utilizing natural-based polyols for bio-based polyurethane formulations.
- **WATER-BASED 2-C** INDOOR COATING - Odorless and solvent-free indoor coating for gymnasium and fieldhouse systems.
- **2-C URETHANES** - Formulated without heavy metals to create an eco-friendly and non-hazardous system.
- **POLYTURF PAD AND POUR LEED® CERTIFIED SYSTEM -** LEED is a rating system developed by the U.S. Green Building Council to set a benchmark for the design, construction, and operation of high-performance green facilities. PolyTurf Pad and Pour was designed specifically for this market.

GreenLay™ was first developed and used by Tarkett Sports is 1995. The first installation was a gymnasium facing temperature variations and rising moisture levels due to a nearby river. Today, the same installation is in excellent condition and is still in use after 20 years, with no damage resulting from moisture conditions. Since 1995, there have been 12 million square feet of GreenLay™ installed worldwide with over 4 million square feet installed in North America. Most notably, there have been **zero** failures to date when properly installed. GreenLay™ has revolutionized sports flooring installations to become the new standard for performance and environmental responsibility.

GreenLay™ is a unique installation method for resilient sports flooring that is exclusive to Tarkett Sports' Omnisports Multi-Use, Active+ and PurePlay. It is 98% adhesive-free, tolerates moisture conditions up to 92% relative humidity per ASTM F2170, and saves costs relative to a moisture barrier. With less adhesive, GreenLay™ is also easier to remove and recycle at the end of its long life.

PROTECT PEOPLE AND THE PLANET. THAT'S OUR SUSTAINABILITY COMMITMENT AT BEYNON SPORTS.

The goal of being an increasingly environmentally conscious organization has always been a key driver behind our product development and innovation objectives. Investment in sustainability has been part of our story for decades as we've continued to evolve as a trusted surfacing solution for countless communities of all sizes across the country.

By embodying a socially conscious design that embraces a commitment to both the environment and people, Beynon has remained focused not only on engineering solutions but also educating our customers on their benefits. We do this by harnessing the expertise of a team comprised of the world's most respected and knowledgeable track coaches, polyurethane research chemists, and installation personnel. Their pursuit of new environmentally sensitive technology is essential to driving our field surfacing innovation.

Empowered by their insights, Beynon's outdoor track & field and indoor fieldhouse systems are built to last and provide a surface that has unmatched durability and boasts the longest lifecycle of any sports surface on the market. The trust evoked by our track and field systems is evidenced by the over 7,500 installations in North America.

BEYNON'S MANUFACTURING SUCCESS

Fully vertically integrated, Beynon Sports is a leading producer of single and two-component polyurethane elastomers, coatings, and adhesives for sports and specialty applications. Manufactured in Maryland, Beynon products are proudly Made in America, with quality management systems certified to ISO 9001-2015.

When compared to sheet good (a prefabricated surface solution that cannot be resurfaced and is consequently disposed of) or latex systems, polyurethane offers a seamless surface with proven long-term durability, leading shock absorption, and easy maintenance.

The achievements below highlight Beynon's unwavering dedication to innovation and sustainability:

- **2022**: Awarded EcoVadis Gold medal – Tarkett Group.
- **2022**: 8 systems achieve USDA Certified Biobased product certification, BioPreferred Program.
- **2013**: 14 systems achieve GreenGuard Gold, UL's highest level of certification for low air emissions.
- **2010**: Designed first polyurethane athletic surfacing system to feature a biobased gel layer containing more than 50% renewable plant-based material.
- **2007**: Introduced first high-performance environmentally friendly waterborne polyurethane structural spray.
- **2006**: Introduced first high-performance environmentally friendly waterborne polyurethane coating.
- **2005**: Designed unique thixotropic pore sealer supplied in IBC totes, eliminating the need for over 400 plastic pails per project.

STRIVING FOR A SUSTAINABLE FUTURE

In addition to offering track systems that have been tested and proven at thousands of locations across the U.S., we are backed by a wide field of experts across the Tarkett Sports family. This team ensures that we not only maintain our sustainability standards but also continue to strive for the next steps in innovation. The gains made from that commitment and ambition then get passed to our customers, who reap the benefits of having sustainable, world-class track systems that will endure for decades.

	Tarkett Indoor Synthetic Courts: **ENVIRONMENTAL RESPONSIBILITY** Environmental responsibility is a broad endeavor in which Tarkett is committed to being an industry leader. As winner of the BFM/Ernst & Young Green Business Award in 2011 and a member the KKR Green Portfolio program, Tarkett is consistently proving its dedication to environmental progress. The Tarkett approach is based on Cradle to Cradle® principles, which account for environmental impact across the entire life cycle of a particular product, from initial manufacturing to end-of-life. It is a circular approach to design that attempts to create a sustainable loop of production, use, and reuse, with minimal environmental effect and optimal product performance in the process. To achieve these goals, Tarkett divides the product life cycle into four groups: good materials, resource stewardship, People-Friendly Spaces, and Reuse and Recycle. These categories not only assist Tarkett in focusing our design efforts, they offer consumers a framework to evaluate sports flooring across its entire life-cycle. Environmental data for each of Tarkett Sports' flooring options is presented in the context of these four criteria. **Good Materials** Good materials are safe for people and the environment. Ideally, they are capable of re-entering a technological or biological cycle, meaning they can be recycled into newly manufactured products or be returned to the ecosystem. Tarkett's dedication to using good materials also involves meeting or exceeding all regulatory standards, such as the REACH program or California Proposition 65. **People-Friendly Spaces** The health of people during product use and maintenance is a consideration that cannot be overlooked in the pursuit of environmental responsibility. It incorporates factors such as indoor air quality that can affect the well-being of individuals who suffer from asthma and allergies in particular. Tarkett is the flooring industry leader in producing products with exceptionally low emissions of volatile organic compounds (VOCs) and exceeds all regulatory standards. In this way, Tarkett is committed to creating People-Friendly Spaces through healthier flooring options. **Reuse and Recycle** To create a truly circular product design, a product must be either reused or recycled at the end of its useful life. It is a priority that the materials contained in flooring do not prevent it from being incorporated back into new products. Tarkett has a history of recycling as the industry's largest recycling operation since 1957, including both pre-consumer and post-consumer recycled content. Several of Tarkett's indoor Flooring options have LEED credits. Omnisports flooring can be nearly 100% recycled at the end of its life especially with Tarkett Sports GreenLay, which is virtually 98% adhesive free. https://www.tarkettsportsindoor.com/wp-content/uploads/2020/02/Booklets-OMNISPORTS-LEED-TS-Indoor-FEB2020.pdf Lowering our product impact- Because sustainable sport is integral to the wellbeing of our communities, preserving our ecosystems is a part of what drives all of our product innovation. After all, if there's no planet, there's no play.

MAKING A REAL DIFFERENCE EVERY YEAR

GREENER PRODUCTS

Discover the FieldTurf products that are leading the change. Our unwavering commitment to quality and innovation helps power our drive to Change The Game for athletes and for the planet.

DRIVING THE FIELD TO ZERO

When it comes to waste, we have a simple mission: create a future where none of our products ever makes it to a landfill. Getting there isn't just a journey; it's a quest. It's why we've devoted our research and development efforts to tackle the complexity required to recycle old turf. It's why we repurpose key materials from end-of-life installations to create the advanced components of future products.

And it's why we continue to be the forefront of developing technology to expand end-of-life turf applications — transforming would-be waste and dispersed materials into useful new products with renewed value.

While we may not have an exact date, and don't want to throw out an obscure year in the future, our dedication of **DRIVING THE FIELD TO ZERO** is very much alive.

Follow our journey:

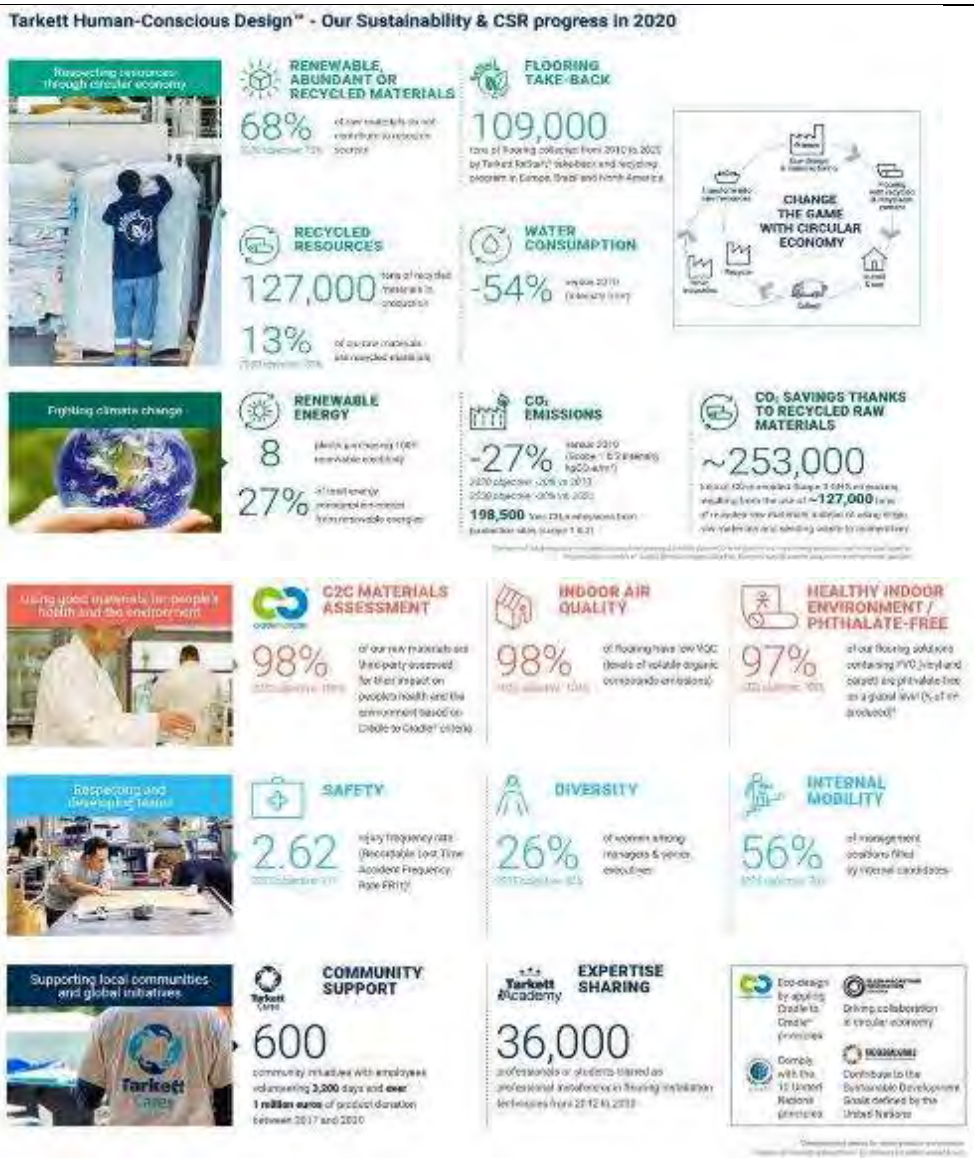

Greener Products: Discover the FieldTurf products that are leading the change. Our unwavering commitment to Quality and innovation helps power our drive to Change The Game for athletes and for the planet:

- **VersaTile:** The ultimate drainage and shock underlayment solution, VersaTile delivers the perfect mix of drainage and shock absorption. Made from recycled post-industrial turf and thermoelastomers, VersaTile transform excess into a green solution.
- **ThermaGreen: SportLite** by ThermaGreen is a nonwoven Geotextile shock and drainage pad. Made of post-industrial cross linked polyethylene, every field installed helps divert over twelve truck-loads of foam from landfills.
- **Re-Cover:** Instead of removing and disposing an aged field, FieldTurf Re-Cover installs a new field on top of the existing surface. The process repurposes the existing field to help provide added safety and performance to the new field.
- **Ecomax:** The infill system utilizes extruded composite pellets made up of recycled post-industrial turf and thermoplastic elastomer that offers a green solution without sacrificing performance and durability.

	• **Finding New Homes:** Many aged sports fields have been repurposed for landscape or recreational use. The System might no longer be right for competitive activities but still has a lot of life for other settings. We encourage and help organizations donate their aged surface to local communities. • **Greenboard:** The innovative technology combines "nonrecyclable" plastics and postconsumer turf to make a durable and 100% recycled fiber-reinforced composite board with zero wood content. Tarkett has reached the highest level of maturity a company can achieve in the CDP. The company is now part of the top 2% best performing companies out of 24 800 companies that are assessed by CDP on climate data. CDP is a global non-profit that runs the world's leading carbon disclosure platform and is considered as the gold standard in the assessment of corporate climate strategy. Early in 2023, Tarkett's climate roadmap was approved by the Science Based Targets initiative (SBTi). Since 2023, the company is included in the annual Europe's Climate Leaders Ranking by Financial Times and Statista. In September 2024, Tarkett had achieved a Platinum Medal by sustainability rating platform EcoVadis, setting a new benchmark in the flooring and sports surfaces industry.
4. PRICING	
4.1. Cost Proposal	
4.1.1. ***Pricing Model.*** Provide a description of your pricing model or methodology identifying how the model works for the products and services included in your proposal. Your response should describe how the proposed pricing model is able to be audited by an Equalis Group member to assure compliance with the pricing in the Master Agreement.	FieldTurf is submitting line-item pricing for our products and services. Each line item not-to-exceed unit price includes materials, labor/installation, and freight (except outside of domestic US). FieldTurf offers our best prices and the best value for CCOG members. Although all prices are not-to-exceed, often priced projects are less than the published not to exceed prices due to economies of scale and FieldTurf's commitment to pass on the best price possible to customers. There is no maximum quantity or limit for products that can be purchased. There are minimum purchase limits put in place but purchases can be made below the minimum threshold using RS MEANS UBP. Total Acquisition Cost: The pricing included from FieldTurf per unit is fully described as the total cost of acquisition where products/services account for materials, products, labor, installation, so the goods are operational for the intended purpose at the member's location. Prevailing Wage: FieldTurf and our subcontractors agree to comply with all laws regarding prevailing wage rates applicable to construction of public work, and any related federal requirements, including the Davis Bacon Act, applicable to this RFP and Equalis Group Members. Discounts are available based on scope of work, economies of scale, and volume on a project by project basis (due to the nature of the individual projects). Additional courtesy discounts are also offered on RS MEANS site projects. Site work or products services not listed on FieldTurf Equalis price schedule will be priced via RS MEANS.

	Custom or owner specified products and services that are not listed on the FieldTurf Equalis price schedule or RS MEANS, will be priced via Alternative Costing Method as indicated in price schedule. Equalis, the public sector, customers, and their legal or audit team will be able to use the FieldTurf Equalis price schedule, proposal, RS Means estimate and breakdown (all provided by FieldTurf upon request) to complete their audit to ensure compliance with the Master agreement. **See sample proposal, RS MEANS estimate and breakdown below in section 4.1.2.** The first step in proposal compliance review is to assure that the current Equalis contract number, due diligence link, and logo are on the proposal. The second step is to confirm that the price per unit is equal to or less than the price per unit on the Equalis price schedule. The third step is to confirm that if there is any site work or unit book pricing scope of work that a RS MEANS estimate is generated for additional audit purposes. Finally, SmartBuy can generate an Equalis breakdown for the customer that links the proposal to the price schedule and RS MEANS estimate. See below for an example. SmartBuy also confirms that the Equalis fee is accounted for and eventually remitted to Equalis. The proposal, RS MEANS estimate, and breakdown can all be provided to the customer, their legal team, and their audit team for compliance purposes and review.
4.1.2. ***Auditable.*** Describe how the proposed pricing model is able to be audited by public sector agencies or CCOG to assure compliance with pricing in the Master Agreement.	The public sector, customers, and their legal or audit team will be able to use the FieldTurf Equalis price schedule, proposal, RS Means estimate and breakdown (all provided by FieldTurf upon request) to complete their audit to ensure compliance with the Master agreement. See sample proposal, RS MEANS estimate and breakdown below. The first step in proposal compliance review is to assure that the current Equalis contract number, due diligence link, and logo are on the proposal. The second step is to confirm that the price per unit is equal to or less than the price per unit on the Equalis price schedule. The third step is to confirm that if there is any site work or unit book pricing scope of work that a RS MEANS estimate is generated for additional audit purposes. Finally, SmartBuy can generate an Equalis breakdown for the customer that links the proposal to the price schedule and RS MEANS estimate. See below for an example.

	SmartBuy also confirms that the Equalis fee is accounted for and eventually remitted to Equalis. The proposal, RS MEANS estimate, and breakdown can all be provided to the customer, their legal team, and their audit team for compliance purposes and review. [redacted]

[redacted]

	[redacted]

	[redacted]
4.1.3. ***Cost Proposal Value.*** Which of the following statements best describes the pricing offered included in Respondent's cost proposal.	The prices offered in your Cost Proposal are: ☐ lower than what you offer other group purchasing organizations, cooperative purchasing organizations, or state purchasing departments. ☒ equal to what you offer other group purchasing organizations, cooperative purchasing organizations, or state purchasing departments. ☐ higher than what you offer other group purchasing organizations, cooperative purchasing organizations, or state purchasing departments. ☐ not applicable. Please explain below.
4.1.4. ***Cost of Shipping.*** Is the cost of shipping included in the pricing submitted with your response? If no, describe how freight, shipping, and delivery costs are calculated.	Shipping costs are included in our customer proposals. Shipping to Alaska or Hawaii can cause the shipping price to rise as noted on our pricing notes. Shipping and Freight to Canada, Hawaii, Alaska or other areas outside of the continental US is not included in standard. Primary pricing and will be an additional cost based on site location. Additional shipping costs will be based on the cost to transport equipment and materials from the closest US port to the job site. Additional costs may also be added for crew transportation and accommodations to any site outside of the continental US.

4.1.5. ***Pricing Open Market or Sourced Goods.*** If relevant, propose a method for the pricing of Open Market Items or Sourced Goods.

NOTE: For a definition of Open Market Items, please refer to **Part One, Section 5.4 – Other Pricing Scenarios**.

Pricing of Open Market, Sourced Goods, or site work will be addressed using one of the following formats:

1. **Alternative Method of Costing:** covers any product and/or service not covered by catalog pricing, published price list, line-item price list, automated system for pricing, or is a product and /or service due to the projects or applications specifications, conditions and /or requirements that need to be custom designed, developed, manufactured and /or produced to meet the requirements of an individual project or sole source. This is only for custom items that the customer specifies that cannot be priced via UPB or RS MEANS.

Alternative methods of costing - percent of overhead/markup to cost	Percent	25%
Discounts offered of alternative costing methods (cost + profit & overhead) Rate of discount.	Percent	10%

2. **Unit Price Book via RS MEANS** estimate will be obtained for projects with site work line items not included in FieldTurf Equalis product pricing spreadsheet. RS MEANS is self contained and consists of a turn-key solution that includes a complete line-item listing of all the products, supplies, material, equipment, services, accessories and options with their description, specification, terms, conditions and associated pricing for each item, sub-assemblies and/or assemblies. FieldTurf reserves the right to offer a discount to the RS MEANS calculation to account for volume discounts or to stay within standard market pricing.

3. **R.S. Means or Equivalent Unit Pricing Book.** Pricing included in the Cost Proposal are calculated using R.S. Means or equivalent UPB and may be used for Labor and Materials. Pricing will be submitted as a coefficient of the UPB line-item pricing. State, local, or regional modifiers may be utilized (as per regional city index).

R.S. Means Multiplier/Factor - Normal Hours	Coefficient	0.99
R.S. Means Multiplier/Factor - Out Side of Normal Hours	Coefficient	1.15

4.1.6. ***Total Cost of Acquisition.*** Identify any components from the total cost of acquisition that are ***NOT*** included in the Cost Proposal. This

FieldTurf's unit prices include supply, installation, and freight. Some projects may have additional permitting requirements that the customer is responsible for paying for and would be an increase in the cost of acquisition. Regarding some remote locations, there may be additional mobilization charges or to meet customer's requirements, additional mobilization charges may be incurred.

a.) Installation of manholes, junction boxes, gabions, rip rap, or storm drainage outside of turf limits, unless listed in project proposal/scope of work.

would include all additional charges that are not directly identified as freight or shipping. For example, permitting, installation, set up, mandatory training, site work, or initial inspection may be required but not initially considered in the Cost Proposal. Identify any parties that impose such costs and their relationship to the Respondent.	b.) Adjusting of existing utilities such as electrical conduits, power poles, water, sewer, gas, cable, phone, drainage. c.) Installation of any electrical, mechanical, or plumbing associated with the field construction area not listed in project proposal/scope of work. d.) This proposal is based on our designed dynamic base drainage system and internal storm water calculations. We anticipate the local municipalities accepting this system during the permitting phase. If not accepted, additional costs may be required to construct an alternate drainage system. e.) Payment of any required capacity fees, tap fees, usage fees, reservation fees, hydrant flow test fees, impact fees, or other regulatory and/or permitting fees. f.) Unsuitable soils: once subgrade has been established, a proof roll will be performed to ensure structural stability of the soils; if unsuitable soils are encountered, a price to remedy these areas can be negotiated and priced via RS MEANS. g.) Union labor other labor law levies-unless specified in project proposal. h.) Taxes or Testing Fees- unless specified in project proposal. i.) Any work or costs not included in the project proposal, scope of work.
5. GO-TO-MARKET STRATEGY	
5.1. Respondent Organizational Structure & Staffing of Relationship	
5.1.1. ***Key Contacts.*** Provide contact information and resumes for the person(s) who will be responsible for the following areas; 1. Executive Contact 2. Contract Manager 3. Sales Leader 4. Reporting Contact	1. Executive Contact: Darren Gill & Eddy Schmitt 2. Contract Manager: Sarah Morehead 3. Sales Leader: Eric Fisher & Jamie McDonald 4. Reporting Contact: Alanna Yellowbear 5. Marketing Contact: Iannick Disanza Primary Points of contract for Equalis contract is Sarah Morehead & Eric Fisher.

5. Marketing Contact. ***Indicate who the primary contact will be if it is not the Sales Leader.	FieldTurf has one of the most experienced and knowledgeable teams in the industry. By choosing us, you're selecting a partner that is committed to you; and we're with you for the long term. From start to finish, your team of FieldTurf experts is ready to help turn your dream facility into reality. Let's Change the Game together. **MEET OUR LEADERSHIP TEAM** **Eddy Schmitt, MBA** President & CEO, Tarkett Sports eddy.schmitt@tarkettsports.com ▸ HEC Paris, University of Chicago Booth School of Business, Vienna University of Economics and Business **Drew Beynon, MBA** Chief Operating Officer drew.beynon@tarkettsports.com ▸ Bucknell University University of North Carolina ▸ Over 20 years with Tarkett Sports **Jamie MacDonald** Senior Vice-President of Sales, North America jamie.macdonald@tarkettsports.com ▸ Purdue University ▸ Over 15 years with FieldTurf
5.1.2. ***Sales Organization.*** Provide a description of your sales organization, including key staff members, the size of the organization, in-house vs. third-party sales resources, geographic territories, vertical market segmentation, etc.	FieldTurf, Beynon, and Tarkett Sports Sales teams span the entire United States. Tarkett Sports is vertically integrated, and the sales teams work together to provide customers a bundled package of products and services that meet their customers sports facility needs. See the lists below of the Senior Leadership Team, FieldTurf Sales Team, Beynon Sales Team, and Tarkett Sports Sales Teams plus other key staff members.

OUR TEAM

FieldTurf has one of the most experienced and knowledgeable teams in the industry. By choosing us, you're selecting a partner that is committed to you; and we're with you for the long term. From start to finish, your team of FieldTurf experts is ready to help turn your dream facility into reality. Let's Change the Game together.

MEET OUR LEADERSHIP TEAM

Eddy Schmitt, MBA
President & CEO, Tarkett Sports
eddy.schmitt@tarkettsports.com

- HEC Paris, University of Chicago Booth School of Business, Vienna University of Economics and Business

Drew Beynon, MBA
Chief Operating Officer
drew.beynon@tarkettsports.com

- Bucknell University University of North Carolina
- Over 20 years with Tarkett Sports

Jamie MacDonald
Senior Vice-President of Sales, North America
jamie.macdonald@tarkettsports.com

- Purdue University
- Over 15 years with FieldTurf

HOW WE CHANGE THE GAME

WE MAKE IT EASY

Everything we do, and the way we do it, is aimed to make the process easier for you. We focus on ensuring your experience is memorable and hassle-free.

WE INSIST ON QUALITY

We don't cut corners. We've invested in quality materials, quality manufacturing and quality teams to deliver sustainable surfaces that make a difference for your program.

WE INVEST IN INNOVATION

We're dedicated to an endless pursuit of innovation through science. Designed and tested at the FieldTurf Innovation and Performance Center, our systems set the bar in their respective classes. Our game-changing innovations continue to change the game.

WE GIVE BACK

Giving back to communities and youth sports is at the core of our values. Through partnerships with Make-A-Wish Georgia, Soccer in the Streets, USA Football and numerous others, FieldTurf continues to Change the Game.

Jed Easterbrook
Regional Vice President
Rocky Mountain Region
Tarkett Sports
FieldTurf-Beynon-Renner
Denver Office: 303-775-6773
Salt Lake Office: 801-448-5656
Email: Jed.Easterbrook@tarkettsports.com

	Jamie MacDonald Senior Vice President of Sales – North America Tarkett Sports FieldTurf / Beynon / Tarkett Sports Construction 175 N Industrial Blvd NE Calhoun Georgia 30701 USA Tel: +1 815-482-8942 Mobile: 815-482-8942 Fax: +1 514-340-9374 Email: jamie.macdonald@tarkettsports.com **Jonathan Huard** Regional Vice President, Central Region FieldTurf USA, Inc. 251 Newton Ave. Glen Ellyn IL 60137 USA Tel: +1 630-474-9817 Mobile: +1 630-697-4566 Fax: +1 630-474-9818 Email: Jonathan.Huard@fieldturf.com **Donny Jones** Regional Vice President FieldTurf USA, Inc. Arizona * Alaska* Washington WA Office: 360-668-8989 AZ Office: 602-284-8987 Mobile: 206-817-2048 Email: donny@ftnw.com **Perry DiPiazza** NE Regional Vice-President of Sales FieldTurf USA, Inc. Tel: +1 201-776-7767 Fax: +1 201-857-2142 Email: Perry.Dipiazza@fieldturf.com **Rob Gloeckner** Vice President, Western Region TSP FieldTurf USA, Inc. 19600 SW 129th Avenue Suite A Tualatin Oregon 97062 USA Tel: +1 503 563 6396 Mobile: +1 503-803-3060 Email: rob.gloeckner@tarkettsports.com

Construction/Design/Engineering Related Consultants:

Fritz Ballard, PE (TX), LEED AP ND, CPESC
Director of Civil Engineering
FieldTurf USA, Inc.
FL CGC#1507328/#1527582
755 Causey Road
Murrells Inlet SC 29576 USA
Tel: +1 843 450 2104
Email: Fritz.Ballard@fieldturf.com

Lisa J. Rosauer, CFB (Certified Field Builder)
Civil Estimator and Construction Manager
FieldTurf USA, Inc.
903 N Opdyke Road Suite A1
Michigan 48326 USA
Tel: +1 612-990-6522
Email: lisa.rosauer@tarkettsports.com

Chris Hulk, PE (Professional Engineer)
Director of Design and Construction – NE
FieldTurf USA, Inc.
Cell: 203-676-4445
Email: christopher.hulk@fieldturf.com

Christopher Chisam RLA, LEED AP
Director of Construction Quality West Region
Tarkett Sports
9792 Swan Lake Dr.
Granite Bay Ca 95746 USA
Tel: +1 916-346-8543
Email: christopher.chisam@tarkettsports.com

Jeff Yoos
Regional Director Operations
FieldTurf USA, Inc.
2555 Washington Rd. Suite 630
Pittsburgh PA 15241 USA
Tel: +1 412-835-7060
Mobile: +1 412-475-3339
Fax: +1 412-835-7063
Email: jeff.yoos@external.fieldturf.com

Todd Grimes, CTB (Certified Track Builder)
Director of Construction, Beynon Sports
Tel: +1 503-805-2637
Email: Todd.Grimes@tarkettsports.com

Todd Bresee
SW Regional Construction Manager
FieldTurf USA, Inc. / Tarkett Sports
Tel: 817-690-5296
Email: todd.bresee@fieldturf.com

Tarkett Sports Construction
Based in Texas
Specializes in the design and construction of Sports Facilities, focusing on artificial turf, running tracks, and tennis/pickleball courts.
Francisco Vazquez
Email: francisco.vazquez@external.tarkett.com

Gregory Weisbrich
Construction Manager WA/OR CESL
FieldTurf USA, Inc.
25119 142nd Ave SE
Meridian Valley, WA 98042 USA
Tel: +1 425 246 8087
Email: greg.weisbrich@tarkettsports.com

Estimating:
Marie-Christine Raymond
Vice President of Customer Operations
FieldTurf USA, Inc.
Tarkett Sports
7445 Cote-de-Liesse Suite 200
Montreal Quebec H4T 1G2
Canada
Email: mraymond@fieldturf.com

Michael Vincent
Vice President of Construction & Estimating
FieldTurf USA, Inc.
903 N Opdyke Road Suite A1
Auburn Hills Michigan 48326 USA
Tel : 248-860-2893
Email: michael.vincent@fieldturf.com

Function	Name	Title	Phone	Email
Contract Manager	Sarah Morehead	Director of Operations – SmartBuy	503-267-0165	Sarah.morehead@smartbuycooperative.com
Coop Sales Manager	Eric Fisher	Director of Sales	503-708-6548	Eric.fisher@smartbuycooperative.com

Marketing Manager	Iannick DiSanza	Director of Marketing	514-885-8638	iannick.disanza@tarkettsports.com
Customer & Support Manager	Thomas Mullins	Vice President of Installations	706-280-6548	Thomas.mullins@tarkettsports.com
Distributors, Dealers, Installers, Sales Reps	Jamie MacDonald, Craig Yancy	Regional VP, Regional Sales Manager Installer: RS Global, Turf Dogs **States: AL, MS, TN**	815-482-8942 205-908-5608	Jamie.MacDonald@fieldturf.com craig.yancey@fieldturf.com
	Donny Jones	Regional Sales Manager, Regional VP Installer: FieldTurf Construction **States: AK, AZ, WA**	707-586-8873	Donny.jones@fieldturf.com
	Tim Coury,	Regional Sales Manager, Regional VP Installer: FieldTurf Construction **States: CA (South of Fresno), NV**	707-586-8873 404-229-4135	tcfieldturf@gmail.com
	Andrew Rowley / Steven Sosa;	Regional Sales Manager, Regional VP **States: CA (North of Fresno), NV**	707-529-8459	andrew@fieldturfnorcal.com
	Jed Easterbrook	Regional VP Southwest, Rocky Mountain Regional Manager Installer: Beyond the Turf, RS Global, FieldTurf Construction	512-632-9181	Jed.Easterbrook@fieldturf.com
	Andrew Dyjak	Regional VP, NE Regional VP of Sales Installer: RS Global, Beyond the Turf **States: CT, ME, MA, NH, RI, VT**	860-333-7839	Andrew.Dyjak@fieldturf.com
	John McShane; Jim Shanahan	Regional Sales Manager, Regional VP **States: MD, VA**	301-907-4727 610-585-8707	John.McShane@fieldturf.com james.shanahan@fieldturf.com
	Chris Wedge; Jamie MacDonald	Regional Sales Manager, Regional VP of Sales Installer: RS Global **States: FL**	352-242-7620 815-482-8942	Chris.Wedge@fieldturf.com Jamie.MacDonald@fieldturf.com
	Jonathan Huard, Brian Smykowski	Regional VP, Regional Sales Manager **States: IL**	440-221-9620 773-569-1038	Jonathan.Huard@fieldturf.com brian.smykowski@fieldturf.com
	Blake Centers; Jonathan Huard	Regional Sales Manager, Regional VP **States: IL (South), IN, MI, WI**	440-221-9620 773-569-6814	blake.centers@fieldturf.com Jonathan.Huard@fieldturf.com

Matthew Cole, Jonathan Huard	Regional Sales Manager, Regional VP **States: IA, MN, NE, ND, SD**	216-339-5393 773-569-6814	Matthew.Cole@fieldturf.com Jonathan.Huard@fieldturf.com
JC Field; Jonathan Huard	Regional Sales Manager, Regional VP **States: KY, OH**	520-241-4118 773-569-6814	jc.field@fieldturf.com Jonathan.Huard@fieldturf.com
Bill Bamber; Jim Shanahan	Regional Sales Manager, Regional VP **States: DE (North DE), East PA**	484-432-9380 610-585-8707	bill.bamber@fieldturf.com james.shanahan@fieldturf.com
Chris Patton; Jamie MacDonald	Regional Sales Manager, Regional VP **States: LA, OK, TX**	469-534-6398 815-482-8942	chris.patton@tarkettsports.com Jamie.MacDonald@fieldturf.com
Bryan Cox; Jamie MacDonald	Regional Sales Manager, Regional VP **States: LA, TX**	512-925-9788 815-482-8942	bryan.cox@tarkettsports.com Jamie.MacDonald@fieldturf.com
Brandon Parrott; Jamie MacDonald	Regional Sales Manager, Regional VP **States: TX**	815-482-8942	brandon.parrott@tarkett.com Jamie.MacDonald@fieldturf.com
Eric Lutz; Jamie MacDonald	Regional Sales Manager, Regional VP **States: TX**	512-868-7424 815-482-8942	eric.lutz@tarkettsports.com Jamie.MacDonald@fieldturf.com
Steve Coury	Regional Sales Manager, Regional VP **States: ID, HI, OR**	404-229-4135	scouryfieldturf@gmail.com
David Ross; Jamie MacDonald	Regional Sales Manager, Regional VP **States: AR, KS, MO**	816-886-8097 815-482-8942	david.ross@fieldturf.com Jamie.MacDonald@fieldturf.com
Will Johnson; Jim Shanahan	Regional Sales Manager, Regional VP **States, DE (Dover & South), MD**	302-507-6671 610-585-	william.johnson@fieldturf.com james.shanahan@fieldturf.com

	Josh Keown, Jamie MacDonald	Regional Sales Manager, Regional VP **States: GA, TN (East of Nashville)**	404-556-8265 815-482-8942	josh.keown@fieldturf.com Jamie.MacDonald@fieldturf.com
	Patrick Zeni, Jim Shanahan	Regional Sales Manager, Regional VP **States: NC, SC**	724-825-8765 610-585-8707	patrick.zeni@fieldturf.com james.shanahan@fieldturf.com
	Conner Schlegel, Jim Shanahan	Regional Sales Manager, Regional VP **States: PA (West), WV**	610-301-2462 610-585-8707	connor.schlegel@fieldturf.com james.shanahan@fieldturf.com
	Perry DiPiazza	Regional VP **States: NJ, NY**	201-776-7767	perry.dipiazza@external.fieldturf.com
	Darren Gill	Executive Vice President **Canada**	514-375-2584	dgill@fieldturf.com

Consultants & Trainers	Thomas Mullins	Vice President of Installations	706-280-6383	Thomas.Mullins@tarkettsports.com
Technical, Maintenance & Support Services	Christapor Papazian	AP&AR Manager - Finance	514-375-2616	Christapor.Papazian@tarkettsports.com
Quotes, Invoicing & Payments	Thomas Mullins	Vice President of Installations	706-280-6383	Thomas.Mullins@tarkettsports.com
Warranty & After the Sale	Christapor Papazian	AP&AR Manager - Finance	514-375-2616	Christapor.Papazian@tarkettsports.com
Financial Manager	Jennifer Hopper	Chief Financial Officer	514-375-2591	jennifer.hopper@tarkettsports.com

Running Track Sales and Beynon Sports President	John Beynon	President	410-935-4058	jbeynon@beynonsports.com
Tarkett Sports COO	Drew Beynon	Tarkett Sports COO	443-417-6797	Drew.Beynon@tarkettsports.com
Marketing Manager	Iannick DiSanza	Director of Marketing	514 885 8638	iannick.disanza@tarkettsports.com
Indoor Synthetic Sports Flooring Technical Manager	William Thornton	North American Indoor Sports Flooring Technical	706 383 5847	William.Thornton@tarkettsports.com
Indoor Synthetic Court Surfaces	Stephane Leudet de la Vallee	Vice President Indoor Products North America & EMEA	770-510-3423	Stephane.Leudet@tarkettsports.com

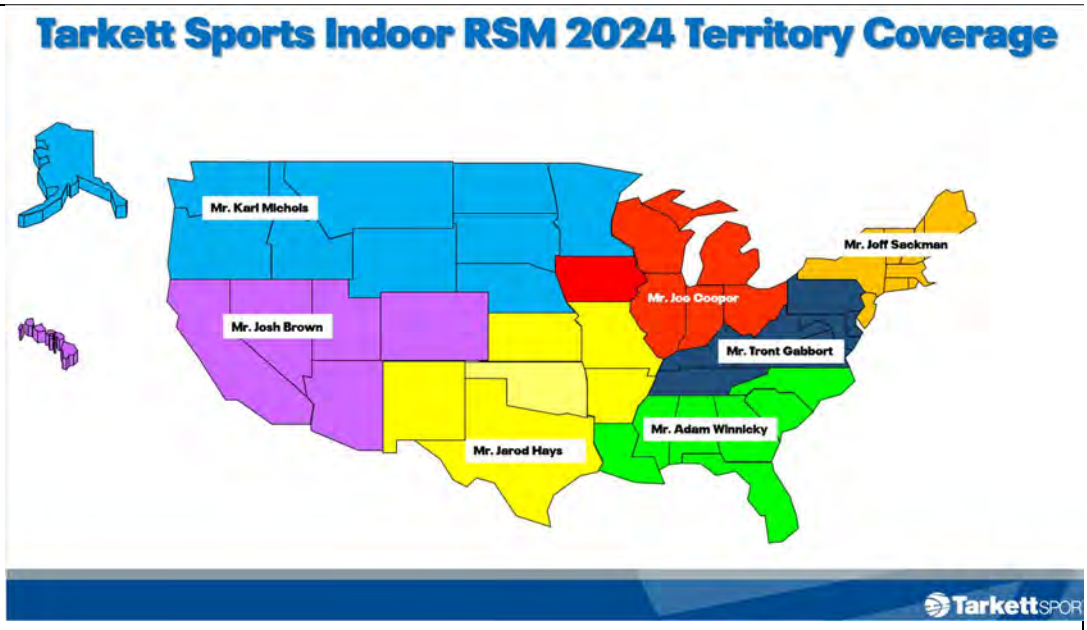

Beynon Sports Sales Teams for Running Tracks and Outdoor Courts:

- Everett Bratsch – ND, SD, NE , MN, IA
- Dennis Regan-KS, MO, OK, AR
- Doug Wilson- TX, LA, GA, FL
- Seth Sheridan-MS, KY, TN
- Kenny Smith-NC, SC
- Bill Teten-IL, MI, IN, OH, IL
- Tom Mitchell-NY, NJ
- Bryan Mitterling-PA, WV
- Mark Scrivano/Beynon – VA, Wash DC, MD, DE
- Andrew Dyjak – ME, VT, NH, MA, RI, CT
- Renner Sports – CO, UT, MT, WY
- Reed McNeil & James Traynor- OR, WA, ID,
- Mason Farnsworth- CA
- Cody Taylor – OR, WA, ID (Courts)

BEYNON
A Tarkett Sports Company

2025 BSS East Sale, PM, Contracts Contact Information

Region	Name	Sales Cell	Sales Email	PM	PM Cell	@BeynonSports.com
1	Main Office	410-771-9473	Jreinke@BeynonSports.com	Justin Reinke	443-401-2528	Jreinke@beynonsports.com
2	Bill Teten Bill Moffitt	402-250-1826 614-784-5152	Bteten@BeynonSports.com Bmoffitt@beynonsports.com	Brooks Michel	443-761-2862	Bmichel@beynonsports.com
3	Bryan Mitterling	610-608-4998	Bmitterling@BeynonSports.com	Ivan Carrico	443-761-8156	Icarrico@beynonsports.com
4	Tom Mitchell	443-610-4661	Tmitchell@BeynonSports.com	Justin Reinke	443-401-2528	Jreinke@beynonsports.com
5	Kenny Smith	336-848-9112	Ksmith@BeynonSports.com	Ivan Carrico	443-761-8156	Icarrico@beynonsports.com
6	Seth Sheridan	615-892-0382	Ssheridan@BeynonSports.com	Kyle Cross	443-800-2167	Kcross@beynonsports.com
7	Serge Silva	315-436-8892	Ssilva@BeynonSports.com	Bryan DiVenanzio	443-834-9586	Bdivenanzio@BeynonSports.com
8	Everett Bratsch	612-900-5130	Ebratsch@BeynonSports.com	Luke Gerbes	443-987-5868	Lgerbes@BeynonSports.com
9	Dennis Regan	316-641-5970	Dregan@BeynonSports.com	Bryan DiVenanzio (Jeff Taylor)	443-834-9586 410-960-1226	Bdivenanzio@BeynonSports.com Jtaylor@beynonsports.com
10	Doug Wilson	512-639-3466	Doug.Wilson@TarkettSports.com	Connor Smith	443-761-0773	Jreinke@beynonsports.com

Region	Contract Administrator	Cell Phone	Email Address
1, 2, 3, 4	Katy Frederique	443-761-8156	Kfrederique@BeynonSports.com
5, 6, 7	Mardel Miller-Kowalewski	443-933-1508	Mmiller-kowalewski@BeynonSports.com
8, 9, 10	Lisa August	443-690-8144	Laugust@BeynonSports.com

FieldTurf USA, Inc. is owned by Tarkett Group.
The following FieldTurf Authorized Distributors/Resellers can issue Equalis proposals, accept PO's, contracts, payment on behalf of FieldTurf USA, Inc. for Equalis Projects include:

- Beynon Sports Surfaces Inc.
- L.E.R. Inc. (dba as Renner Sports)
- Classic Turf Company LLC
- Tarkett Sports Construction a division of FieldTurf USA, Inc.
- Tarkett Sports Indoor- a division of FieldTurf USA, Inc.
- Precision Construction & Contracting LLC (PCC)
- FieldTurf USA, Inc.
- Benchmark Contracting Inc.
- Mid-Atlantic Sports Construction- a division of FieldTurf USA, Inc.

5.2. Contract Implementation Strategy & Expectations

5.2.1. ***Contract Expectations.*** What is your company's strategy to increase market share in the public sector

FieldTurf will continue to promote and increase use of the Equalis contract nationwide. Equalis is a very beneficial coop contract that we will continue to leverage across all divisions of Tarkett Sports including indoor courts, outdoor courts, synthetic turf fields, running tracks, and related construction/site work projects. SmartBuy will educate our internal sales teams on how to promote Equalis and how to incorporate Equalis into their sales presentation to municipal customers.

	while leveraging an Equalis Group Master Agreement?	FieldTurf will continue to market and promote Equalis contract to internal sales teams, external partners and municipalities nationwide. - FieldTurf: 50% market share - Beynon: 80% market share
5.2.2.	***Five (5) Year Sales Vision & Strategy.*** Describe your company's vision and strategy to leverage a resulting contract with Equalis over the next five (5) years. Your response may include but is not limited to; the geographic or public sector vertical markets being targeted; your strategy for acquiring new business and retaining existing business; how the contract will be deployed with your sales team; how you will market the contract, including deployment of the contract on your company website; and the time frames in which this will be completed.	FieldTurf, Beynon, and Tarkett Sports have nationwide sales teams that are educated on the Equalis cooperative purchasing experience. The sales teams will be updated on the Equalis Group contract which they will continue to incorporate into their sales presentations immediately upon award. FieldTurf and Beynon websites will continue to provide information regarding the Equalis Group contract information. Sales teams are required and incentivized to use cooperative purchasing contracts over the RFP option. Equalis Group will be specifically preferred due to their innovative cooperative purchasing approach, contractual viability, and their partnership commitment. FieldTurf will pursue new field/track/court options as well as the field replacement arena across all municipalities. FieldTurf starts the selling process early with municipalities so that we can educate the owner on the benefits of cooperative purchasing over the RFP process. This technique helps to significantly increase new business opportunities and drive more projects to cooperative purchasing and Equalis Group. We also encourage cross marketing with other Equalis vendors and customers. FieldTurf and Tarkett Sports have had several new company acquisitions in the past year. When new companies are incorporated into the organization, they are required to participate in on going cooperative purchasing training sessions where they are introduced to Equalis and educated on how to sell, promote, and justify for customers the benefits of Equalis. FieldTurf USA, Inc. is very familiar with how to successfully market or leverage cooperative purchasing contracts to a variety of public and private institutions. Immediately upon award, FieldTurf will begin marketing the Equalis contract. These steps include but are not limited to: • FieldTurf SmartBuy Division explain to current and future EQUALIS members the value and benefits on Contract Selling. Attend requested board meetings, council meetings, etc. as part of our team to provide owners complete procurement information and opportunities for their sports surfaces project. • Provide familiarity/knowledge of member cooperative procurement options. • Include FieldTurf logo, product information, and when applicable, project. Testimonies and articles in the EQUALIS cooperative marketing literature and brochures and website. • Attendance of national and local conferences promoting partnership. • Integrate current subcontractors and architects into the EQUALIS fold by explaining the value-added nature of the contract highlighting: a) Its simplicity and ease of use. b) Its defined, preferential pricing c) Its proven potency in the marketplace d) Which entities have used it and why e) Attend customer/ client meetings to promote the EQUALIS contract in conjunction with architects/ subcontractors

f) Demonstrate (through sales figures and other data) the current success of the contract and its potential to grow with continued understanding and participation. Many subs and architects do not fully realize the potential of the contract- our job is to change that.

FieldTurf Marketing Plan for Equalis:

Below are several sections that describe the strategic steps FieldTurf/Beynon/SmartBuy will use to market the EQUALIS contract:

Information About SmartBuy

SmartBuy is the dedicated Cooperative Purchasing Division of FieldTurf/Beynon. With over 50 years of combined experience and over $1 billion revenue in cooperative purchasing, the SmartBuy team has enabled hundreds of municipalities including public schools, colleges, universities, cities, park/recreation departments, and counties to purchase their desired FieldTurf sports field, Beynon running track, or Beynon court. The following steps will be used to market the EQUALIS contract:

- Corporate Top Down Instruction to incorporate EQUALIS into sales presentations.
- Continued Education for the nationwide Beynon and FieldTurf sales teams and regional Vice President Team
- SmartBuy-Dedicated Team to Market and Manage EQUALIS Contract
- Promoting EQUALIS Contract to Municipalities
- Print Advertising and direct mailing
- Trade Show attendance
- Electronic, Web, and Social Media site advertising

FieldTurf is aware that the marketing success depends on communicating the contract's value, knowing the contract thoroughly, and communicating the proper use of contracted products and services to end user.

FieldTurf and Beynon have developed unique partnerships throughout the US enabling us to serve all our clients in all 50 states and abroad. In addition, FieldTurf USA, Inc has a dedicated Cooperative Purchasing Team. The team consists of:

SmartBuy Sales Director: Eric Fisher

Operations Director: Sarah Morehead

Project Managers: Mistie Beaudoin, Kelly Taylor

Project Administrator: Alanna Yellowbear

Eric Fisher is responsible for implementing sales strategies, attending lunch & learns, conferences and educating the FieldTurf and Beynon Sales Personnel. Eric has over 18 years' experience in cooperative purchasing.

Sarah Morehead is responsible for the proposal, bid compilation and pricing aspects of the program. Sarah has more than 20 years of experience in cooperative purchasing.

	Mistie reviews Turf, Track, Court, Indoor Flooring, and Customer Service proposals for Equalis pricing compliance; provides Cost Breakdowns and other documents requested by customers. She monitors customers' PO's, job status, and payment completion to schedule payment of Equalis admin fees. Kelly reviews Track, Court, Indoor Flooring, and Customer Service proposals for Equalis pricing compliance; provides Cost Breakdowns and other documents requested by customers. She monitors customers' PO's, job status, and payment completion to schedule payment of Equalis admin fees. Mistie & Kelly are responsible for sending proposal submittals and other information to owners, responsible for reporting, contract documentation and any additional client needs. Alanna supports the team by providing supporting coop documentation such as cooperative purchasing project lists, state statutes and project administration. The FieldTurf Cooperative Purchasing "SmartBuy" Division Team has worked with many cooperative state agencies successfully to market, educate and guide municipal members in their purchase FieldTurf synthetic fields. Our division has generated more than 1 billion dollars in total co-op contracts resulting in approximately 10 million dollars in revenue for cooperative purchasing agencies. SECTION A: Sales teams work with Equalis member regarding project scope of work, sports surfacing products, budget, and time frame. FieldTurf and Beynon project managers generate customer proposals with relative EQUALIS pricing and language. Customer reviews and approves proposal and then issues a PO to FieldTurf. Simple, legal, quick process to meet the customer's needs. SECTION B: SmartBuy is the dedicated full time, Cooperative purchasing division for FieldTurf/Beynon. Eric Fisher, SmartBuy Director of Sales, is responsible for working with the FieldTurf Marketing and Sales Divisions to personally implement sales strategies with municipalities and to educate the FieldTurf and Beynon Sales personnel. Eric is committed to marketing the Equalis contract. SECTION C: The marketing plan will be managed by SmartBuy in the Tualatin, Oregon office. SmartBuy works nationwide to EDUCATE THE FIELDTURF AND BEYNON SALES TEAMS. There is absolutely a stated corporate commitment to using the Equalis Contract. The CEO of FieldTurf will require that the turf and track sales teams promote Equalis in their sales presentations. SmartBuy already has a sales team education process in place and processes in place to handle a high volume of Cooperative Purchasing projects through EQUALIS. SmartBuy has substantial resources committed to marketing the Equalis Contract including the power of the entire FieldTurf corporate marketing division which puts us in the position to: • Explain EQUALIS contractual language to EQUALIS members so <u>all</u> parties are on the same page.

- Explain the “who/ what/ when/ where/ why” with sales forces and EQUALIS members to successfully land EQUALIS based accounts.
- Market at trade shows with EQUALIS.
- Generate co-branded fliers.
- Sponsor & attend events to get in front of EQUALIS clients. Attend requested board meetings, council meetings, etc. as part of our team to provide owners complete procurement information and opportunities for their sports surfaces project.
- Provide familiarity/knowledge of member state’s cooperative procurement options.

Sample Equalis Proposal provided in section: 6.1.4 (Self-Audit) of this bid response.

Sample Equalis Marketing/Project list provided below:

SMARTBUY
Purchasing Program Tarkett Sports

PURCHASING MADE EASY

THE ULTIMATE SUFACE EXPERIENCE AND SELECTION **FROM SMARTBUY**

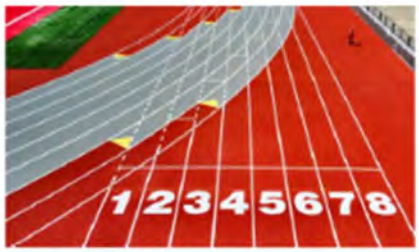

SPORT SURFACES AVAILABLE THROUGH THE EQUALIS CONTRACT:

equalis GROUP

- Beynon Running Tracks
- FieldTurf Synthetic Turf
- Tarkett Sports Indoor/Outdoor Courts
- Complete Surface Construction

Equalis Group' utilization of the lead agency model for competitively bid contracts, provides our participants' the savings they expect and the efficiencies and peace of mind they deserve within the procurement process.

Surfaces have already been bid at a national level so there is no need to duplicate the Bid process per Equalis #2020.05.2.

BENEFITS OF THE SMARTBUY PURCHASING PROGRAM:

- Pre-determined, preferential pricing.
- Eliminate duplication and expense of bid process.
- Turn-key process.
- Expedite the purchase/installation of sport surface.
- Obtain the products you want at the competitive prices.

	[redacted]

[redacted]

Print Advertisements:
FieldTurf advertises in several industry nationwide publications and in over 30 state/regional publications. Our typical advertising budget exceeds $120,000 annually.

<u>FieldTurf & Beynon Print Advertising</u>

FieldTurf advertises in all major industry publications including:

- American Football Monthly
- Athletics Administration
- Athletic Business
- Athletic Management
- Coach & Athletic Director

- Coaching Management
- Collegiate Directories
- Government Recreation & Fitness
- Park & Recreation Business
- Recreation Management
- Sportsfield Management

In addition to these nationwide publications, FieldTurf advertises in over 30 state/regional
publications. Our typical advertising budget exceeds $120,000 annually.

Trade Shows
FieldTurf attends well over 200 trade shows per year nationwide. At each of these shows FieldTurf makes our best efforts to educate potential clients about the benefits of using EQUALIS.
Our Equalis program managers will personally attend a large number of the shows as well.

Alabama High School Athletic Directors & Coaches Association
Alberta Recreation and Park Association
Alberta School Business Officials
All-Star Sports Week
American Baseball Coaches Association
American Football Coaches Association
American Institute of Architects
American School Administrators
American School Business Officials
American Society of Landscape Architects
AQLM – Association of Quebec municipalities
Arizona Interscholastic Athletics Administrator's Association
Arizona Parks and Recreation Association
Arkansas High School Coaches Association
Arkansas School Boards Association
Association of School Business Officials Intl.
Association of the U.S. Army Exposition
Athletic Business
Athletic Business K-12 Summit
Athletic Equipment Managers
Boys & Girls Club
British Columbia Recreation and Parks Association
California Association of School Business Officials
California Association of Recreation and Park Districts
California Foundation of Community Colleges
California Park & Recreation Society
California State Athletic Directors Association Conference
Coalition for Adequate School Housing
Colorado Association of School Boards
Colorado Athletic Directors Association
Connecticut Association of Independent Schools

	Connecticut Association of Athletic Directors Connecticut Conference of Municipalities Connecticut Recreation & Parks Association Council of Educational Facility Planners Intl. Eastern Collegiate Athletic Conference Facilities Operators Conference Federation of Canadian Municipalities Florida Association of Counties Florida Association of School Business Officials Florida Educational Facility Planners Association Florida Interscholastic Athletic Administrators Association Florida Recreation & Park Association Georgia Association of School Facility Administrators Georgia Athletic Coaches Association Georgia Recreation & Park Association Golden Triangle Coaches Clinic Golf Industry Show Greenbuild Greenbuilders 2010 Home Builder's Show Idaho Association of School Administrators Idaho Athletic Administrators Association IHRSA Illinois Association of Park Districts Illinois Association of Park Districts (IPRA/IAPD) Conference Illinois Association of School Boards Illinois Athletic Directors Association Illinois Park & Recreation Association Indiana Interscholastic Athletic Administrators Association Indiana School Boards Association International County Management Iowa High School Athletic Directors Association Kansas Association of School Boards Kansas Interscholastic Athletic Administrators Association Kansas Recreation & Park Association – Administration Kentucky High School Athletic Association Louisiana High School Athletic Association Maryland Association of School Business Officials Maryland Recreation and Parks Association Michigan Interscholastic Athletic Administrators Association Michigan Interscholastic Athletic Administrators Association Conference Michigan School Business Officials Minnesota Football Coaches Clinic Mississippi Coaches Association Missouri Association of School Administrators Missouri Interscholastic Athletic Administrators Association Missouri School Boards Association Montana Coaches Association NAHB International Builders' Show National Association of Basketball Coaches National Association of Church Business Administration National Association of Collegiate Directors of Athletics

	National Association of Collegiate Directors of Athletics Convention National Association of Counties National Athletic Directors Conference & Exhibit Show National Athletic Trainers Association National High School Athletic Coaches Association National Institute of Governmental Purchasing National Intramural Recreation & Sports Association National Intramural-Recreational Sports Association Conference & Expo National League of Cities National Recreation and Park Association National School Boards Association National School Plant Managers Association National Soccer Coaches Association of America National Soccer Coaches Convention New England Football Coaches Clinic New Jersey - Directors of Athletics Association of New Jersey New Jersey Chapter of the American Society of Landscape Architects New Jersey Conference of Mayors New Jersey Park and Rec New Jersey School Board Association New Jersey School Building & Grounds Association New Jersey State League of Municipalities New Mexico Activities Association New York State Athletic Administrators Association Northwest All Sports Clinic Ohio Association of School Business Officials Ohio Interscholastic Athletic Administrators Ohio School Board Association Oklahoma Coaches Association Oklahoma State School Boards Association Ontario - Park and Rec Ontario Ontario Association of School Business Officials Ontario Colleges Athletic Association Ontario School Business Officials Oregon Association of School Business Officials Oregon Athletic Directors Association. Oregon Schools Facilities Management Pennsylvania Association of School Business Officials Pennsylvania Recreation & Park Society Pennsylvania School Boards Association Pennsylvania School Business Officials Pennsylvania State Athletic Directors Association Pet Care Services Association Pet Care Services Association Convention & Expo PGA Merchandise Show San Angelo Football Clinic School and College Building Expo Soccer Champions Coaches Clinic South Dakota Interscholastic Athletic Administrators Association Sports Turf Association Sports Turfs Managers Association Stadia Expo

	Stadium Managers Association Tennessee Interscholastic Athletic Administrators Association TES - Education Show Texas Association of School Administrators Texas Association of School Business Officials Texas High School Athletic Directors Association Texas High School Coaches Association United States Specialty Sports Association US Youth Soccer Workshop Utah Interscholastic Athletic Administrators Association Virginia Association of School Business Officials Virginia Interscholastic Athletic Administrators Association Virginia Recreation & Park Society Washington Association of School Business Officials Washington Secondary Schools Athletic Administrators Association Wisconsin Athletic Directors Annual Conference Wisconsin Athletic Directors Association Wisconsin State Education Convention Worship Facilities Expo Wyoming Coaches Association **FieldTurf's E-Marketing efforts are broken up into three categories:** **Website - 35,000 visitors per month** www.fieldturf.com www.beynonsports.com www.smartbuycooperative.com http://www.fieldturf.com/smartbuy-purchasing-program/ **Direct Mailing** FieldTurf has a lead database with over 20,000 potential customers. Frequent messages are sent to various customer groups – most of which contain messaging pertaining to the SmartBuy program. **Social Media:** Twitter Facebook Instagram
5.2.3. ***Sales Objectives.*** What are your top line sales objectives in each of the five (5) years if awarded this contract?	Year 1 goal: 10 million in contract value. (FieldTurf has this in the Pipeline currently for Equalis projects at about 85% confidence that customer will proceed) Year 2 goal: 12 million contract value Year 3 goal: 15 million in contract value Year 4 goal: 15 million in contract value Year 5 goal: 15 million in contract value The goals above are conservative based on Tarriff threats and other varying economic factors. FieldTurf will strive to exceed the goals listed above.

6. ADMIN FEE & REPORTING	
6.1. ***Administration Fee & Reporting***	
6.1.1. ***Administrative Fee.*** Equalis Group only generates revenue when the Winning Supplier generates revenue based on contract utilization by current and future Members. The administrative fee is normally calculated as a percentage of the total Spend for agencies accessing product and services through the Master Agreement and is typically between two percent (2%) to three percent (3%). In some categories, a flat fee or another fee structure may be acceptable. **Please provide your proposed Administrative Fee percentage or structure.** **NOTE**: The proposed Administrative Fee language for this contract	[redacted] [redacted]

is based on the terms disclosed in the **<u>Attachment A – Model Administration Agreement</u>**.	
6.1.2. ***Sales & Administrative Fee Reporting.*** Equalis Group requires monthly reports detailing sales invoiced the prior month and associated Administrative Fees earned by the 15th of each month. Confirm that your company will meet this reporting requirement. If not, explain why and propose an alternative time schedule for providing these reports to Equalis Group.	Yes, FieldTurf will meet this reporting requirement. FieldTurf does request quarterly admin fee reporting since our projects have a longer duration. Quarterly reports are more useful and productive. FieldTurf is well versed in providing accurate, timely coop admin fee reports and has a team dedicated to ensuring that the fees are properly tracked, reported, and remitted. [redacted] [redacted]

6.1.3. ***Contract Utilization Tracking.*** Define the specific, step-by-step process for your sales and/or quote generation team to tie a quote, proposal, invoice, and/or purchase order to the Equalis cooperative contract in your Customer Relationship Management ("**CRM**"), sales system, or Enterprise Resource Planning ("**ERP**") system. Include any individuals and/or teams involved in this process.	FieldTurf uses a sophisticated sales and project management software system called Syspro to track all proposals, prices, coops, awards, change orders, invoices and payments. Syspro also tracks materials needed, ordered, delivered, installed, and allows for progress payment tracking. [redacted] [redacted] Below is an abbreviated list of Equalis projects that are under contract and being tracked in Syspro for completion percentages, invoices, payments, change orders, etc. Every month this information is updated to reflect current status of the project. Each project has a Syspro Quote number, a job number and a coop identification number. Additionally, the project list is used to market FieldTurf's Equalis contract success to other municipalities. This list is also used in conjunction with Syspro to provide the Equalis quarterly report and admin fee payments to Equalis. [redacted] Teams involved include the previously shown Turf PM team, Turf Sales teams, SmartBuy Team and project managers, Tarkett Sports accounting team, Tarkett Sports Finance Team, and the Senior Leadership Team.

Consultants & Trainers	Thomas Mullins	Vice President of Installations	706-280-6383	Thomas.Mullins@tarkettsports.com
Technical, Maintenance & Support Services	Christapor Papazian	AP&AR Manager - Finance	514-375-2616	Christapor.Papazian@tarkettsports.com
Quotes, Invoicing & Payments	Thomas Mullins	Vice President of Installations	706-280-6383	Thomas.Mullins@tarkettsports.com
Warranty & After the Sale	Christapor Papazian	AP&AR Manager - Finance	514-375-2616	Christapor.Papazian@tarkettsports.com
Financial Manager	Jennifer Hopper	Chief Financial Officer	514-375-2591	jennifer.hopper@tarkettsports.com

Contract Operations Manager	Sarah Morehead	Director of Operations SmartBuy	503-267-0165	Sarah.morehead@smartbuycooperative.com
Coop Sales Manager	Eric Fisher	Director of Sales	503-708-6548	Eric.fisher@smartbuycooperative.com
Running Track Sales and Beynon Sports President	John Beynon	President	410-935-4058	jbeynon@beynonsports.com
Tarkett Sports COO	Drew Beynon	Tarkett Sports COO	443-417-6797	Drew.Beynon@tarkettsports.com
Marketing Manager	Iannick DiSanza	Director of Marketing	514 885 8638	iannick.disanza@tarkettsports.com
Indoor Synthetic Sports Flooring Technical Manager	William Thornton	North American Indoor Sports Flooring Technical	706 383 5847	William.Thornton@tarkettsports.com
Indoor Synthetic Court Surfaces	Stephane Leudet de la Vallee	Vice President Indoor Products North America & EMEA	770 510 3423	Stephane.Leudet@tarkettsports.com

6.1.4. ***Self-Audit.*** Describe any self-audit process or program that you plan to employ to verify compliance with your proposed contract with Equalis Group. This process includes ensuring that your sales organization provides, and Members obtain the correct pricing, reports reflect all sales made under the Contract, and Winning Supplier remit the proper admin fee to Equalis.

FieldTurf's cooperative purchasing team, SmartBuy, is responsible for self-audit processes. SmartBuy reviews all Equalis coop proposals before they are published to the customer to confirm that they are compliant with the FieldTurf Equalis coop contract. The first step in proposal compliance review is to assure that the current Equalis contract number, due diligence link, and logo are on the proposal. The second step is to confirm that the price per unit is equal to or less than the price per unit on the Equalis price schedule. The third step is to confirm that if there is any site work or unit book pricing scope of work that a RS MEANS estimate is generated for additional audit purposes. Finally, SmartBuy can generate an Equalis breakdown for the customer that links the proposal to the price schedule and RS MEANS estimate. See below for an example. SmartBuy also confirms that the Equalis fee is accounted for and eventually remitted to Equalis. The proposal, RS MEANS estimate, and breakdown can all be provided to the customer, their legal team, and their audit team for compliance purposes and review.

	[redacted]

[redacted]

[redacted]

	[redacted]
	Equalis Breakdown that links the proposal, to the RS MEANS estimate and to the Equalis approved FieldTurf Price schedule above.

(This page is intentionally left blank)

PROPOSAL FORM 2: COST PROPOSAL

A template for the Cost Proposal has been included as **Attachment B** and must be uploaded as a separate attachment to a Respondent's proposal submission. Respondents are permitted to revise any part of the spreadsheet to the Cost Proposal to accurately reflect the column titles, details, discounts, pricing categories of products, services, and solutions being offered to Equalis Group Members.

Respondent's Cost Proposal must include the information requested in **Section 5 – Cost Proposal & Pricing**.

NOTE: Cost Proposals will remain sealed and will only be opened and reviewed for those Respondents that meet the minimum Technical Proposal score threshold as described in **Section 6.2 - Evaluation and Scoring of Proposals**.

(The rest of this page is intentionally left blank)

PROPOSAL FORM 3: DIVERSITY VENDOR CERTIFICATION PARTICIPATION

Diversity Vendor Certification Participation - It is the policy of some Members participating in Equalis Group to involve minority and women business enterprises (M/WBE), small and/or disadvantaged business enterprises, disable veterans' business enterprises, historically utilized businesses (HUB) and other diversity recognized businesses in the purchase of goods and services. Respondents shall indicate below whether or not they hold certification in any of the classified areas and include proof of such certification with their response.

a. Minority Women Business Enterprise

Respondent certifies that this firm is an MWBE: ☐Yes ☒**No**

List certifying agency: Click or tap here to enter text.

b. Small Business Enterprise (SBE) or Disadvantaged Business Enterprise ("DBE")

Respondent certifies that this firm is a SBE or DBE: ☐Yes ☒**No**

List certifying agency: Click or tap here to enter text.

c. Disabled Veterans Business Enterprise (DVBE)

Respondent certifies that this firm is an DVBE: ☐Yes ☒**No**

List certifying agency: Click or tap here to enter text.

d. Historically Underutilized Businesses (HUB)

Respondent certifies that this firm is an HUB: ☐Yes ☒**No**

List certifying agency: Click or tap here to enter text.

e. Historically Underutilized Business Zone Enterprise (HUBZone)

Respondent certifies that this firm is an HUBZone: ☐Yes ☒**No**

List certifying agency: Click or tap here to enter text.

f. Other

Respondent certifies that this firm is a recognized diversity certificate holder: ☐Yes ☒**No**

List certifying agency: Click or tap here to enter text.

(The rest of this page is intentionally left blank)

PROPOSAL FORM 4: CERTIFICATIONS AND LICENSES

Provide a copy of all current licenses, registrations and certifications issued by federal, state and local agencies, and any other licenses, registrations or certifications from any other governmental entity with jurisdiction, allowing Respondent to provide the products and services included in their proposal which can include, but not limited to licenses, registrations or certifications. M/WBE, HUB, DVBE, small and disadvantaged business certifications and other diverse business certifications, as well as manufacturer certifications for sales and service must be included if applicable.

Please also list and include copies of any certificates you hold that would show value for your response not already included above.

FIELDTURF USA, Inc.		
STATE	**License Number**	**License Class**
Alabama	51948	General Contractor
Alabama	S-40652	Sub-Contractor
Alaska	CONE33631	General Contractor
Arizona	314411	Dual KA
Arkansas	172490623	General Contractor
California (Public Works License-DIR)	1000004625	DIR license
California	849044	Contractor Registration
Delaware	2008203565	331-Contractor-Resident
Florida	CGC1507328	General Contractor
Georgia	GCCO005138	General Contractor Company
Idaho (PWC)	PWC-C-16674-AAA-4	20790, 02740, 02310
Idaho (Burreau of Occupational Licenses - non-public bids)	RCE-38454	
Illinois Department of Human Rights	IDHR # 120963-00	n/a
Indiana	20230616	General Contractor
Iowa	C106260	Registered Contractor
Louisiana	CL.0045097	artificial turf, specialty, recreation & sporting facilities & golf courses
Minnesota	IR714564	Contractor Registration
Mississipi	16435-SC	Asphalt, Excavating, Grading & Drainage
Montana	156033	Construction Contractor
Nebraska	44678-22	Contractor Registration
Nevada	68611	C10 Limited to synthetic turf only
***New Jersey**	631021	Public Works Contractor
***New Jersey**		School Development Authority Prequal
New Mexico	363013	GF05 and GB98 (General Builder);
New Mexico	2471720120608	Department of Public Works (Workforce Solutions)
North Carolina	66648	General Contracting
North Dakota	49661	Class A Contractor
Oregon	181583	GC - Commercial & Residential
Rhode Island	40614	Class C Commercial
South Carolina	G116980	BD5 GD5 H15 BT5 MS5 RR5 WL5
Tennessee	57455	S-Athletic & S-Running
Utah	7330453-5501	E100, S310, S500
Virginia	2705106035	Class A Highway & Rec Facility
Washington	CC01 FIELDU1955JH	Construction Contractor
West Virginia	WV043760	General Building
Wyoming *depends on county/city	3564	General
Wyoming *depends on county/city	3074	Excavation & Grading
Wyoming *depends on county/city	3075	Miscellaenous

PROPOSAL FORM 5: UNRESOLVED FINDINGS FOR RECOVERY

O.R.C. Chapter 9.24 prohibits CCOG from awarding a contract to any entity against whom the Auditor of State has issued a finding for recovery, if such finding for recovery is "unresolved" at the time of award. By submitting a proposal, a Respondent warrants that it is not now, and will not become, subject to an "unresolved" finding for recovery under **O.R.C. Chapter 9.24** prior to the award of any contract arising out of this RFP, without notifying CCOG of such finding. The Proposal Review Team will not evaluate a proposal from any Respondent whose name, or the name of any of the subcontractors proposed by the Respondent, appears on the website of the Auditor of the State of Ohio as having an "unresolved" finding for recovery.

Is your company the subject of any unresolved findings for recoveries?

☐ Yes

☒ **No**

(The rest of this page is intentionally left blank)

PROPOSAL FORM 6: MANDATORY DISCLOSURES

1. *Mandatory Contract Performance Disclosure.*

Disclose whether your company's performance and/or the performance of any of the proposed subcontractor(s) under contracts for the provision of products and services that are the same or similar to those to be provided for the Program which is the subject of this RFP has resulted in any formal claims for breach of those contracts. For purposes of this disclosure, "**formal claims**" means any claims for breach that have been filed as a lawsuit in any court, submitted for arbitration (whether voluntary or involuntary, binding or not), or assigned to mediation. For any such claims disclosed, fully explain the details of those claims, including the allegations regarding all alleged breaches, any written or legal action resulting from those allegations, and the results of any litigation, arbitration, or mediation regarding those claims, including terms of any settlement. While disclosure of any formal claims will not automatically disqualify a Respondent from consideration, at the sole discretion of Equalis Group, such claims and a review of the background details may result in a rejection of a Respondent's proposal. Equalis Group will make this decision based on the Proposal Review Team's determination of the seriousness of the claims, the potential impact that the behavior that led to the claims could have on the Respondent's performance of the work, and the best interests of Members.

Provide statement here. As with any large company engaged in multiple construction markets throughout the United States, FieldTurf USA, Inc. is occasionally added as a party to legal proceedings. However, FieldTurf is not currently involved in any breach of contract claims or lawsuits.

2. *Mandatory Disclosure of Governmental Investigations.*

Indicate whether your company and/or any of the proposed subcontractor(s) has been the subject of any adverse regulatory or adverse administrative governmental action (federal, state, or local) with respect to your company's performance of services similar to those described in this RFP. If any such instances are disclosed, Respondents must fully explain, in detail, the nature of the governmental action, the allegations that led to the governmental action, and the results of the governmental action including any legal action that was taken against the Respondent by the governmental agency. While disclosure of any governmental action will not automatically disqualify a Respondent from consideration, such governmental action and a review of the background details may result in a rejection of the Respondent's proposal at Group's sole discretion. Equalis Group will make this decision based on the Proposal Review Team's determination of the seriousness of the claims, the potential impact that the behavior that led to the claims could have on the Respondent's performance of the work, and the best interests of Members.

Provide statement here. In the last 10 years, on one occasion, FieldTurf USA, Inc. used a subcontractor who, unbeknownst to FieldTurf, was not registered in the State of New Jersey. As the general contractor, FieldTurf received a citation but was not required to pay a fine. The matter is closed and has been fully resolved.

(The rest of this page is intentionally left blank)

PROPOSAL FORM 7: DEALER, RESELLER, AND DISTRIBUTOR AUTHORIZATION

CCOG allows Suppliers to authorize dealers, distributors, and resellers to sell the products and services made available through, and consistent with the Terms and Conditions set forth in, the Master Agreement. If Supplier intends to authorize their dealers, distributors, or resellers access to the Master Agreement in the event of a contract award Supplier must provide a list, either in the form of a document or a weblink, to identify those organizations who are being authorized access to the Master Agreement.

Will the Supplier authorize dealers, distributors, resellers access to Master Agreement?

☒ **Yes**

☐ **No**

If yes, how will Supplier disclose which organization(s) will have access to the Master Agreement? This list can be updated from time to time upon CCOG's approval.

Respondent Response:

The following FieldTurf Authorized Distributors/Resellers can issue Equalis proposals, accept PO's, contracts, payment on behalf of FieldTurf USA, Inc. for Equalis projects:

- Benchmark Contracting Inc.
- Beynon Sports Surfaces Inc.
- Classic Turf Company LLC
- EasyTurf/FieldTurf Commercial, a division of FieldTurf USA, Inc.
- FieldTurf USA, Inc.
- L.E.R. Inc. (dba as Renner Sports)
- Mid-Atlantic Sports Construction- a division of FieldTurf USA, Inc.
- Precision Construction & Contracting LLC (PCC)
- Tarkett Sports Construction a division of FieldTurf USA, Inc.
- Tarkett Sports Indoor- a division of FieldTurf USA, Inc.

(The rest of this page is intentionally left blank)

PROPOSAL FORM 8: MANDATORY SUPPLIER & PROPOSAL CERTIFICATIONS

CCOG may not enter into contracts with any suppliers who have been found to be ineligible for state contracts under specific federal or Ohio statutes or regulations. Companies responding to any CCOG RFP MUST certify that they are NOT ineligible by signing each of the statements below. **Failure to provide proper affirming signature on any of these statements will result in a Respondent's proposal being deemed nonresponsive to this RFP.**

I, Darren Gill, hereby certify and affirm that_FieldTurf USA, Inc., has not been debarred, suspended, proposed for debarment, declared ineligible, or voluntarily excluded from participation in transactions by the Unites States Department of Labor, the United States Department of Health and Human Services, or any other federal department or agency as set forth in 29 CFR Part 98, or 45 CFR Part 76, or other applicable statutes.

AND

I, Darren Gill, hereby certify and affirm that FieldTurf USA, Inc., is in compliance with all federal, state, and local laws, rules, and regulations, including but not limited to the Occupational Safety and Health Act and the Ohio Bureau of Employment Services and the following:

- Not penalized or debarred from any public contracts or falsified certified payroll records or any other violation of the Fair Labor Standards Act in the last three (3) years;
- Not found to have violated any worker's compensation law within the last three (3) years;
- Not violated any employee discrimination law within the last three (3) years;
- Not have been found to have committed more than one (1) willful or repeated OSHA violation of a safety standard *(as opposed to a record keeping or administrative standard)* in the last three (3) years;
- Not have an Experience Modification Rating of greater than 1.5 (a penalty-rated employer) with respect to the Bureau of Workers' Compensation risk assessment rating; and
- Not have failed to file any required tax returns or failed to pay any required taxes to any governmental entity within the past three (3) years.

AND

I, Darren Gill, hereby certify and affirm that FieldTurf USA, Inc., is not on the list established by the Ohio Secretary of State, pursuant to **ORC Section 121.23**, which identifies persons and businesses with more than one unfair labor practice contempt of court finding against them.

AND

I, Darren Gill, hereby certify and affirm that FieldTurf USA, Inc. either is not subject to a finding for recovery under **ORC Section 9.24**, or has taken appropriate remedial steps required under that statute to resolve any findings for recovery, or otherwise qualifies under that section to enter into contracts with CCOG.

I, Darren Gill, hereby affirm that this proposal accurately represents the capabilities and qualifications of FieldTurf USA, Inc., and I hereby affirm that the cost(s) proposed to CCOG for the performance of services and/or provision of goods covered in this proposal in response to this CCOG RFP is a firm fixed price structure as described in the Cost Proposal, inclusive of all incidental as well as primary costs. *(Failure to provide the proper affirming signature on this item may result in the disqualification of your proposal.)*

Darren Gill
Executive Vice President
March 27, 2025

PROPOSAL FORM 9: CLEAN AIR ACT & CLEAN WATER ACT

The Respondent is in compliance with all applicable standards, orders or regulations issued pursuant to the Clean Air Act of 1970, as Amended (42 U.S. C. 1857 (h), Section 508 of the Clean Water Act, as amended (33 U.S.C. 1368), Executive Order 117389 and Environmental Protection Agency Regulation, 40 CFR Part 15 as required under OMB Circular A-102, Attachment O, Paragraph 14 (1) regarding reporting violations to the grantor agency and to the United States Environment Protection Agency Assistant Administrator for the Enforcement.

Authorized signature:	
Printed Name:	Darren Gill
Company Name:	FieldTurf USA, Inc.
Mailing Address:	175 N. Industrial Blvd. NE, Calhoun, GA 30701
Email Address:	dgill@fieldturf.com
Job Title:	Executive Vice President

(The rest of this page is intentionally left blank)

PROPOSAL FORM 10: DEBARMENT NOTICE

I, the Respondent, certify that my company has not been debarred, suspended or otherwise ineligible for participation in Federal Assistance programs under Executive Order 12549, "Debarment and Suspension", as described in the Federal Register and Rules and Regulations.

Respondents Name:	FieldTurf USA, Inc.
Mailing Address:	175 N. Industrial Blvd NE, Calhoun, GA 30701
Signature	
Title of Signatory:	Darren Gill, Executive Vice President

(The rest of this page is intentionally left blank)

PROPOSAL FORM 11: LOBBYING CERTIFICATIONS

Submission of this certification is a prerequisite for making or entering into this transaction and is imposed by **Section 1352, Title 31, U.S. Code**. This certification is a material representation of fact upon which reliance was placed when this transaction was made or entered into. Any person who fails to file the required certification shall be subject to civil penalty of not less than ten thousand dollars ($10,000) and not more than one hundred thousand dollars ($100,000) for each such failure.

The undersigned certifies, to the best of his/her knowledge and belief, on behalf of Respondent that:

1. No Federal appropriated funds have been paid or will be paid on behalf of the undersigned, to any person for influencing or attempting to influence an officer or employee of any agency, a Member of Congress, an officer or employee of Congress, or an employee of a Member of Congress in connection with the awarding of a Federal contract, the making of a Federal grant, the making of a Federal loan, the entering into a cooperative agreement, and the extension, continuation, renewal, amendment, or modification of a Federal contract, grant, loan, or cooperative agreement.

2. If any funds other than Federal appropriated funds have been or will be paid to any person for influencing or attempting to influence an officer or employee of any agency, a Member of Congress, an officer or employee of Congress, or an employee of a Member of Congress in connection with this Federal contract or cooperative agreement, the undersigned shall complete and submit Standard Form LLL, "Disclosure of Lobbying Activities," in accordance with its instructions.

3. The undersigned shall require that the language of this certification be included in the award documents for all covered sub-awards exceeding one hundred thousand dollars ($100,000) in Federal funds at all appropriate tiers and that all sub-recipients shall certify and disclose accordingly.

Signature: Darren Gill, Executive Vice President

Date: March 27, 2025

(The rest of this page is intentionally left blank)

PROPOSAL FORM 12: CONTRACTOR CERTIFICATION REQUIREMENTS

1. *Contractor's Employment Eligibility*

By entering the contract, Contractor warrants compliance with the Federal Immigration and Nationality Act (FINA), and all other federal and state immigration laws and regulations. The Contractor further warrants that it is in compliance with the various state statutes of the states it will operate this contract in.

Participating Government Entities including School Districts may request verification of compliance from any Contractor or subcontractor performing work under this Contract. These Entities reserve the right to confirm compliance in accordance with applicable laws.

Should the Participating Entities suspect or find that the Contractor or any of its subcontractors are not in compliance, they may pursue any and all remedies allowed by law, including, but not limited to: suspension of work, termination of the Contract for default, and suspension and/or debarment of the Contractor. All costs necessary to verify compliance are the responsibility of the Contractor.

The Respondent complies and maintains compliance with the appropriate statutes which requires compliance with federal immigration laws by State employers, State contractors and State subcontractors in accordance with the E-Verify Employee Eligibility Verification Program.

Contractor shall comply with governing board policy of the CCOG Participating entities in which work is being performed.

2. *Fingerprint & Criminal Background Checks*

If required to provide services on school district property at least five (5) times during a month, contractor shall submit a full set of fingerprints to the school district if requested of each person or employee who may provide such service. Alternately, the school district may fingerprint those persons or employees. An exception to this requirement may be made as authorized in Governing Board policy. The district shall conduct a fingerprint check in accordance with the appropriate state and federal laws of all contractors, subcontractors or vendors and their employees for which fingerprints are submitted to the district. Contractor, subcontractors, vendors and their employees shall not provide services on school district properties until authorized by the District.

The Respondent shall comply with fingerprinting requirements in accordance with appropriate statutes in the state in which the work is being performed unless otherwise exempted.

Contractor shall comply with governing board policy in the school district or Participating Entity in which work is being performed.

Signature: Darren Gull, Executive Vice President

Date: March 27, 2025

(The rest of this page is intentionally left blank)

PROPOSAL FORM 13: BOYCOTT CERTIFICATION

Respondent must certify that during the term of any Agreement, it does not boycott Israel and will not boycott Israel. "Boycott" means refusing to deal with, terminating business activities with, or otherwise taking any action that is intended to penalize, inflict economic harm on, or limit commercial relations specifically with Israel, or with a person or entity doing business in Israel or in an Israeli-controlled territory, but does not include an action made for ordinary business purposes.

Does Respondent agree? Click or tap here to enter text.
(Initials of Authorized Representative)

(The rest of this page is intentionally left blank)

PROPOSAL FORM 14: FEDERAL FUNDS CERTIFICATION FORMS

When a participating agency seeks to procure goods and services using funds under a federal grant or contract, specific federal laws, regulations, and requirements may apply in addition to those under state law. This includes, but is not limited to, the procurement standards of the Uniform Administrative Requirements, Cost Principles and Audit Requirements for Federal Awards, 2 CFR 200 (sometimes referred to as the "Uniform Guidance" or "EDGAR" requirements).

All Respondents submitting proposals must complete this Federal Funds Certification Form regarding Respondent's willingness and ability to comply with certain requirements which may be applicable to specific participating agency purchases using federal grant funds. This completed form will be made available to Members for their use while considering their purchasing options when using federal grant funds. Members may also require Supplier Partners to enter into ancillary agreements, in addition to the contract's general terms and conditions, to address the member's specific contractual needs, including contract requirements for a procurement using federal grants or contracts.

For each of the items below, respondent should certify their agreement and ability to comply, where applicable, by having respondents authorized representative complete and initial the applicable lines after each section and sign the acknowledgment at the end of this form. If a Respondent fails to complete any item in this form, CCOG will consider the Respondent's response to be that they are unable or unwilling to comply. A negative response to any of the items may, if applicable, impact the ability of a participating agency to purchase from the Supplier Partner using federal funds.

1. *Supplier Partner Violation or Breach of Contract Terms*

Contracts for more than the simplified acquisition threshold currently set at one hundred fifty thousand dollars ($150,000), which is the inflation adjusted amount determined by the Civilian Agency Acquisition Council and the Defense Acquisition Regulations Council (Councils) as authorized by 41 USC 1908, must address administrative, contractual, or legal remedies in instances where Supplier Partners violate or breach contract terms, and provide for such sanctions and penalties as appropriate.

Any contract award will be subject to Terms and Conditions of the Master Agreement, as well as any additional terms and conditions in any purchase order, participating agency ancillary contract, or Member construction contract agreed upon by Supplier Partner and the participating agency which mut be consistent with and protect the participating agency at least to the same extent as the CCOG Terms and Conditions.

The remedies under the contract are in addition to any other remedies that may be available under law or in equity. By submitting a proposal, you agree to these Supplier Partner violation and breach of contract terms.

Does Respondent agree? Yes
(Initials of Authorized Representative)

2. *Termination for Cause or Convenience*

When a participating agency expends federal funds, the participating agency reserves the right to immediately terminate any agreement in excess of ten thousand dollars ($10,000) resulting from this procurement process in the event of a breach or default of the agreement by Offeror in the event Offeror fails to: (1) meet schedules, deadlines, and/or delivery dates within the time specified in the procurement solicitation, contract, and/or a purchase order; (2) make any payments owed; or (3) otherwise perform in accordance with the contract and/or the procurement solicitation. Participating agency also reserves the right to terminate the contract immediately, with written notice to offeror, for convenience, if participating agency believes, in its sole discretion that it is in the best interest of participating agency to do so. Respondent will be compensated for work performed and accepted and goods accepted by participating agency as of the termination date if the contract is terminated for convenience of participating agency. Any award under this procurement process is not exclusive and participating agency reserves the right to purchase goods and services from other offerors when it is in participating agency's best interest.

Does Respondent agree? Yes
(Initials of Authorized Representative)

3. *Equal Employment Opportunity*

Except as otherwise provided under 41 CFR Part 60, all participating agency purchases or contracts that meet the definition of "federally assisted construction contract" in 41 CFR Part 60-1.3 shall be deemed to include the equal opportunity clause provided under 41 CFR 60-1.4(b), in accordance with Executive Order 11246, "Equal Employment Opportunity" (30 FR 12319, 12935, 3 CFR Part, 1964-1965 Comp., p. 339), as amended by Executive Order 11375, "Amending Executive Order 11246 Relating to Equal Employment Opportunity," and implementing regulations at 41 CFR Part 60, "Office of Federal Contract Compliance Programs, Equal Employment Opportunity, Department of Labor."

The equal opportunity clause provided under 41 CFR 60-1.4(b) is hereby incorporated by reference. Supplier Partner agrees that such provision applies to any participating agency purchase or contract that meets the definition of "federally assisted construction contract" in 41 CFR Part 60-1.3 and Supplier Partner agrees that it shall comply with such provision.

Does Respondent agree? Yes
(Initials of Authorized Representative)

4. *Davis-Bacon Act*

When required by Federal program legislation, Supplier Partner agrees that, for all participating agency prime construction contracts/purchases in excess of two thousand dollars ($2,000), Supplier Partner shall comply with the Davis-Bacon Act (40 USC 3141-3144, and 3146-3148) as supplemented by Department of Labor regulations (29 CFR Part 5, "Labor Standards Provisions Applicable to Contracts Covering Federally Financed and Assisted Construction"). In accordance with the statute, Supplier Partner is required to pay wages to laborers and mechanics at a rate not less than the prevailing wages specified in a wage determinate made by the Secretary of Labor. In addition, Supplier Partner shall pay wages not less than once a week.

Current prevailing wage determinations issued by the Department of Labor are available at www.wdol.gov. Supplier Partner agrees that, for any purchase to which this requirement applies, the award of the purchase to the Supplier Partner is conditioned upon Supplier Partner's acceptance of the wage determination.

Supplier Partner further agrees that it shall also comply with the Copeland "Anti-Kickback" Act (40 USC 3145), as supplemented by Department of Labor regulations (29 CFR Part 3, "Contractors and Subcontractors on Public Building or Public Work Financed in Whole or in Part by Loans or Grants from the United States". The Act provides that each Supplier Partner or subrecipient must be prohibsited from inducing, by any means, any person employed in the construction, completion, or repair of public work, to give up any part of the compensation to which he or she is otherwise entitled.

Does Respondent agree? Yes
(Initials of Authorized Representative)

5. ***Contract Work Hours and Safety Standards Act***

Where applicable, for all participating agency contracts or purchases in excess of one hundred thousand dollars ($100,000) that involve the employment of mechanics or laborers, Supplier Partner agrees to comply with 40 USC 3702 and 3704, as supplemented by Department of Labor regulations (29 CFR Part 5). Under 40 USC 3702 of the Act, Supplier Partner is required to compute the wages of every mechanic and laborer on the basis of a standard work week of forty (40) hours. Work in excess of the standard work week is permissible provided that the worker is compensated at a rate of not less than one and a half times the basic rate of pay for all hours worked in excess of forty (40) hours in the work week. The requirements of 40 USC 3704 are applicable to construction work and provide that no laborer or mechanic must be required to work in surroundings or under working conditions which are unsanitary, hazardous or dangerous. These requirements do not apply to the purchases of supplies or materials or articles ordinarily available on the open market, or contracts for transportation or transmission of intelligence.

Does Respondent agree? Yes
(Initials of Authorized Representative)

6. ***Right to Inventions Made Under a Contract or Agreement***

If the participating agency's Federal award meets the definition of "funding agreement" under 37 CFR 401.2(a) and the recipient or subrecipient wishes to enter into a contract with a small business firm or nonprofit organization regarding the substitution of parties, assignment or performance or experimental, developmental, or research work under that "funding agreement," the recipient or subrecipient must comply with the requirements of 37 CFR Part 401, "Rights to Inventions Made by Nonprofit Organizations and Small Business Firms Under Government Grants, Contracts and Cooperative Agreements," and any implementing regulations issued by the awarding agency.

Supplier Partner agrees to comply with the above requirements when applicable.

Does Respondent agree? Yes
(Initials of Authorized Representative)

7. ***Clean Air Act and Federal Water Pollution Control Act***

Clean Air Act (42 USC 7401-7671q.) and the Federal Water Pollution Control Act (33 USC 1251-1387), as amended – Contracts and subgrants of amounts in excess of one hundred fifty thousand dollars ($150,000) must contain a provision that requires the non-Federal award to agree to comply with all applicable standards, orders, or regulations issued pursuant to the Clean Air Act (42 USC 7401-7671q.) and the Federal Water Pollution Control Act, as amended (33 USC 1251-1387). Violations must be reported to the Federal awarding agency and the Regional Office of the Environmental Protection Agency (EPA).

When required, Supplier Partner agrees to comply with all applicable standards, orders, or regulations issued pursuant to the Clean Air Act and the Federal Water Pollution Control Act.

Does Respondent agree? Yes
(Initials of Authorized Representative)

8. ***Debarment and Suspension***

Debarment and Suspension (Executive Orders 12549 and 12689) – A contract award (see 2 CFR 180.220) must not be made to parties listed on the government-wide exclusions in the System for Award Management (SAM), in accordance with the OMB guidelines at 2 CFR 180 that implement Executive Orders 12549 (3 CFR Part 1966 Comp. p. 189) and 12689

(3CFR Part 1989 Comp. p. 235), "Debarment and Suspension." SAM Exclusions contains the names of parties debarred, suspended, or otherwise excluded by agencies, as well as parties declared ineligible under statutory or regulatory authority other than Executive Order 12549.

Supplier Partner certifies that Supplier Partner is not currently listed on the government-wide exclusions in SAM, is not debarred, suspended, or otherwise excluded by agencies or declared ineligible under statutory or regulatory authority other than Executive Order 12549. Supplier Partner further agrees to immediately notify the Cooperative and all Members with pending purchases or seeking to purchase from Supplier Partner if Supplier Partner is later listed on the government-wide exclusions in SAM, or is debarred, suspended, or otherwise excluded by agencies or declared ineligible under statutory or regulatory authority other than Executive Order 12549.

Does Respondent agree? Yes
(Initials of Authorized Representative)

9. *Byrd Anti-Lobbying Amendment*

Byrd Anti-Lobbying Amendment (31 USC 1352) – Supplier Partners that apply or bid for an award exceeding one hundred thousand dollars ($100,000) must file the required certification. Each tier certifies to the tier above that it will not and has not used Federal appropriated funds to pay any person or organization for influencing or attempting to influence an officer or employee of any agency, a member of Congress, officer or employee of Congress, or an employee of a member of Congress in connection with obtaining any Federal contract, grant or any other award covered by 31 USC 1352. Each tier must also disclose any lobbying with non-Federal funds that takes place in connection with obtaining any Federal award. Such disclosures are forwarded from tier to tier up to the non-Federal award. As applicable, Supplier Partner agrees to file all certifications and disclosures required by, and otherwise comply with, the Byrd Anti-Lobbying Amendment (31 USC 1352).

Does Respondent agree? Yes
(Initials of Authorized Representative)

10. *Procurement of Recovered Materials*

For participating agency purchases utilizing Federal funds, Supplier Partner agrees to comply with Section 6002 of the Solid Waste Disposal Act, as amended by the Resource Conservation and Recovery Act where applicable and provide such information and certifications as a participating agency maybe required to confirm estimates and otherwise comply. The requirements of Section 6002 includes procuring only items designated in guidelines of the Environmental Protection Agency (EPA) at 40 CFR Part 247 that contain the highest percentage of recovered materials practicable, consistent with maintaining a satisfactory level of competition, where the purchase price of the item exceeds ten thousand dollars ($10,000) or the value of the quantity acquired during the preceding fiscal year exceeded ten thousand dollars ($10,000); procuring solid waste management services in a manner that maximizes energy and resource recovery, and establishing an affirmative procurement program for procurement of recovered materials identified in the EPA guidelines.

Does Respondent agree? Yes
(Initials of Authorized Representative)

11. *Profit as a Separate Element of Price*

For purchases using federal funds in excess of one hundred fifty thousand dollars ($150,000), a participating agency may be required to negotiate profit as a separate element of the price. See, 2 CFR 200.324(b). When required by a participating agency, Supplier Partner agrees to provide information and negotiate with the participating agency regarding profit as a separate element of the price for a particular purchase. However, Supplier Partner agrees that the total price, including

profit, charged by Supplier Partner to the participating agency shall not exceed the awarded pricing, including any applicable discount, under Supplier Partner's Group Purchasing Agreement.

Does Respondent agree? Yes
(Initials of Authorized Representative)

12. *Prohibition on Certain Telecommunications and Video Surveillance Services or Equipment*

Vendor agrees that recipients and subrecipients are prohibited from obligating or expending loan or grant funds to procure or obtain, extend or renew a contract to procure or obtain, or enter into a contract (or extend or renew a contract) to procure or obtain equipment, services, or systems that uses covered telecommunications equipment or services as a substantial or essential component of any system, or as critical technology as part of any system from companies described in Public Law 115-232, section 889. Telecommunications or video surveillance equipment or services produced or provided by an entity that the Secretary of Defense, in consultation with the Director of the National Intelligence or the Director of the Federal Bureau of Investigation, reasonably believes to be an entity owned or controlled by, or otherwise connected to, the government of a covered foreign country are also prohibited.

Does Respondent agree? Yes
(Initials of Authorized Representative)

13. *Domestic preferences for procurements*

For participating agency purchases utilizing Federal funds, Respondent agrees to provide proof, where applicable, that the materials, including but not limited to, iron, aluminum, steel, cement, and other manufactured products are produced in the United States.

"Produced in the United States" means, for iron and steel products, that all manufacturing processes, from the initial melting stage through the application of coatings, occurred in the United States.

"Manufactured products" means items and construction materials composed in whole or in part of non-ferrous metals such as aluminum; plastics and polymer-based products such as polyvinyl chloride pipe; aggregates such as concrete; glass, including optical fiber; and lumber.

Does Respondent agree? Yes
(Initials of Authorized Representative)

14. *General Compliance and Cooperation with Members*

In addition to the foregoing specific requirements, Vendor agrees, in accepting any purchase order from a Member, it shall make a good faith effort to work with Members to provide such information and to satisfy such requirements as may apply to a particular participating agency purchase or purchases including, but not limited to, applicable recordkeeping and record retention requirements.

Does Respondent agree? Yes
(Initials of Authorized Representative)

15. ***Applicability to Subcontractors***

Offeror agrees that all contracts it awards pursuant to the Contract shall be bound by the foregoing terms and conditions.

Does Respondent agree? Yes
(Initials of Authorized Representative)

By signature below, I certify that the information in this form is true, complete, and accurate and that I am authorized by my company to make this certification and all consents and agreements contained herein.

Authorized signature: _____

Printed Name: Darren Gill
Company Name: FieldTurf USA, Inc.
Mailing Address: 175 N. Industrial Blvd NE, Calhoun, GA 30701
Job Title: Executive Vice President

(The rest of this page is intentionally left blank)

PROPOSAL FORM 15: FEMA FUNDING REQUIREMENTS CERTIFICATION FORMS

Please answer the following question. If yes, complete this Proposal Form.

In the event of a contract award, does the Respondent intend to make their products and services available to public agencies utilizing FEMA funds or seeking reimbursement from FEMA?	☒	Yes
	☐	No

When a participating agency seeks to procure goods and services using funds under a federal grant or contract, specific federal laws, regulations, and requirements may apply in addition to those under state law. This includes, but is not limited to, the procurement standards of the Uniform Administrative Requirements, Cost Principles and Audit Requirements for Federal Awards, 2 CFR 200 (sometimes referred to as the "Uniform Guidance" or "EDGAR" requirements). Additionally, Appendix II to Part 200 authorizes FEMA to require or recommend additional provisions for contracts.

All Respondents submitting proposals who desire to work with Members utilizing FEMA funds must complete this FEMA Recommended Contract Provisions Form regarding Respondent's willingness and ability to comply with certain requirements which may be applicable to specific participating agency purchases using FEMA funds. This completed form will be made available to Members for their use while considering their purchasing options when using FEMA grant funds. Members may also require Supplier Partners to enter into ancillary agreements, in addition to the contract's general terms and conditions, to address the member's specific contractual needs, including contract requirements for a procurement using federal grants or contracts.

For each of the items below, Respondent should certify Respondent's agreement and ability to comply, where applicable, by having respondents authorized representative complete and initial the applicable lines after each section and sign the acknowledgment at the end of this form. If a Respondent fails to complete any item in this form, CCOG will consider the respondent's response to be that they are unable or unwilling to comply. A negative response to any of the items may, if applicable, impact the ability of a participating agency to purchase from the Supplier Partner using federal funds.

1. *Access to Records*

For All Procurements

The Winning Supplier agrees to provide the participating agency, the pass-through entity (if applicable), the FEMA Administrator, the Comptroller General of the United States, or any of their authorized representatives access to any books, documents, papers, and records of the Contractor which are directly pertinent to this contract for the purposes of making audits, examinations, excerpts, and transcriptions.

The Winning Supplier agrees to permit any of the foregoing parties to reproduce by any means whatsoever or to copy excerpts and transcriptions as reasonably needed.

The Winning Supplier agrees to provide the FEMA Administrator or his authorized representatives access to construction or other work sites pertaining to the work being completed under the contract.

Does Respondent agree? YES
(Initials of Authorized Representative)

For Contracts Entered into After August 1, 2017, Under a Major Disaster or Emergency Declaration

In compliance with section 1225 of the Disaster Recovery Reform Act of 2018, the participating agency, and the Winning Supplier acknowledge and agree that no language in this contract is intended to prohibit audits or internal reviews by the FEMA Administrator or the Comptroller General of the United States."

Does Respondent agree? YES
(Initials of Authorized Representative)

2. *Changes*

FEMA recommends that all contracts include a changes clause that describes how, if at all, changes can be made by either party to alter the method, price, or schedule of the work without breaching the contract. The language of the clause may depend on the nature of the contract and the procured item(s) or service(s). The participating agency should also consult their servicing legal counsel to determine whether and how contract changes are permissible under applicable state, local, or tribal laws or regulations.

Does Respondent agree? YES
(Initials of Authorized Representative)

3. *Use of DHS Seal, Logo, and Flags*

The Winning Supplier shall not use the DHS seal(s), logos, crests, or reproductions of flags or likenesses of DHS agency officials without specific FEMA pre-approval. The contractor shall include this provision in any subcontracts.

Does Respondent agree? YES
(Initials of Authorized Representative)

4. *Compliance with Federal Law, Regulations, And Executive Orders and Acknowledgement of Federal Funding*

This is an acknowledgement that when FEMA financial assistance is used to fund all or a portion of the participating agency's contract with the Winning Supplier, the Winning Supplier will comply with all applicable federal law, regulations, executive orders, FEMA policies, procedures, and directives.

Does Respondent agree? YES
(Initials of Authorized Representative)

5. *No Obligation by Federal Government*

The federal government is not a party to this or any contract resulting from this or future procurements with the participating agencies and is not subject to any obligations or liabilities to the non-federal entity, contractor, or any other party pertaining to any matter resulting from the contract.

Does Respondent agree? YES
(Initials of Authorized Representative)

6. *Program Fraud and False or Fraudulent Statements or Related Acts*

The Winning Supplier acknowledges that 31 U.S.C. Chap. 38 (Administrative Remedies for False Claims and Statements) applies to the contractor's actions pertaining to this contract.

Does Respondent agree? YES
(Initials of Authorized Representative)

7. *Affirmative Socioeconomic Steps*

If subcontracts are to be let, the Winning Supplier is required to take all necessary steps identified in 2 C.F.R. § 200.321(b)(1)-(5) to ensure that small and minority businesses, women's business enterprises, and labor surplus area firms are used when possible.

Does Respondent agree? YES
(Initials of Authorized Representative)

8. *License and Delivery of Works Subject to Copyright and Data Rights*

The Winning Supplier grants to the participating agency, a paid-up, royalty-free, nonexclusive, irrevocable, worldwide license in data first produced in the performance of this contract to reproduce, publish, or otherwise use, including prepare derivative works, distribute copies to the public, and perform publicly and display publicly such data. For data required by the contract but not first produced in the performance of this contract, the Winning Supplier will identify such data and grant to the participating agency or acquires on its behalf a license of the same scope as for data first produced in the performance of this contract. Data, as used herein, shall include any work subject to copyright under 17 U.S.C. § 102, for example, any written reports or literary works, software and/or source code, music, choreography, pictures or images, graphics, sculptures, videos, motion pictures or other audiovisual works, sound and/or video recordings, and architectural works. Upon or before the completion of this contract, the Winning Supplier will deliver to the participating agency data first produced in the performance of this contract and data required by the contract but not first produced in the performance of this contract in formats acceptable by the (insert name of the non-federal entity).

Does Respondent agree? YES
(Initials of Authorized Representative)

By signature below, I certify that the information in this form is true, complete, and accurate and that I am authorized by my company to make this certification and all consents and agreements contained herein.

Authorized signature: _____

Printed Name: Darren Gill
Company Name: FieldTurf USA Inc.
Mailing Address: 175 N. Industrial Blvd NE, Calhoun, GA 30701
Job Title: Executive Vice President

PROPOSAL FORM 16: ARIZONA CONTRACTOR REQUIREMENTS

Please answer the following question. If yes, please complete this Proposal Form.

In the event of a contract award, does the Respondent intend to make their products and services available to public agencies in the State of Arizona?	☒	Yes
	☐	No

In the event the Awarded Supplier desires to pursue public sector opportunities in the State of Arizona, it is important to understand the requirements for working with those public agencies. The documentation and information contained in this proposal form are intended to provide the Respondent with documentation that could be relevant to the providing products & services to public agencies in the State of Arizona. It is the responsibility of the public agency to ensure they are in compliance with local requirements.

AZ Compliance with Federal and State Requirements

Contractor agrees when working on any federally assisted projects with more than $2,000.00 in labor costs, to comply with all federal and state requirements, as well as Equal Opportunity Employment requirements and all other federal and state laws, statutes, etc. Contractor agrees to post wage rates at the work site and submit a copy of their payroll to the member for their files. Contractor must retain records for three years to allow the federal grantor agency access to these records, upon demand. Contractor also agrees to comply with the Arizona Executive Order 75-5, as amended by Executive Order 99-4.

When working on contracts funded with Federal Grant monies, contractor additionally agrees to comply with the administrative requirements for grants, and cooperative agreements to state, local and federally recognized Indian Tribal Governments.

AZ compliance with workforce requirements

Pursuant to ARS 41-4401, Contractor and subcontractor(s) warrant their compliance with all federal and state immigration laws and regulations that relate to their employees, and compliance with ARS 23-214 subsection A, which states, ..." every employer, after hiring an employee, shall verify the employment eligibility of the employee through the E-Verify program"

CCOG reserves the right to cancel or suspend the use of any contract for violations of immigration laws and regulations. CCOG and its members reserve the right to inspect the papers of any contractor or subcontract employee who works under this contract to ensure compliance with the warranty above.

AZ Contractor Employee Work Eligibility

By entering into this contract, contractor agrees and warrants compliance with A.R.S. 41-4401, A.R.S. 23-214, the Federal Immigration and Nationality Act (FINA), and all other Federal immigration laws and regulations. CCOG and/or CCOG members may request verification of compliance from any contractor or sub-contractor performing work under this contract. CCOG and CCOG members reserve the right to confirm compliance. In the event that CCOG or CCOG members suspect or find that any contractor or subcontractor is not in compliance, CCOG may pursue any and all remedies allowed by law, including but not limited to suspension of work, termination of contract, suspension and/or debarment of the contractor. All cost associated with any legal action will be the responsibility of the contractor.

AZ Non-Compliance

All federally assisted contracts to members that exceed $10,000.00 may be terminated by the federal grantee for noncompliance by contractor. In projects that are not federally funded, Respondent must agree to meet any federal, state or local requirements as necessary. In addition, if compliance with the federal regulations increases the contract costs

beyond the agreed upon costs in this solicitation, the additional costs may only apply to the portion of the work paid by the federal grantee.

Registered Sex Offender Restrictions (Arizona)
For work to be performed at an Arizona school, contractor agrees that no employee or employee of a subcontractor who has been adjudicated to be a registered sex offender will perform work at any time when students are present, or reasonably expected to be present. Contractor agrees that a violation of this condition shall be considered a material breach and may result in the cancellation of the purchase order at the CCOG member's discretion. Contractor must identify any additional costs associated with compliance to this term. If no costs are specified, compliance with this term will be provided at no additional charge.

Offshore Performance of Work Prohibited
Due to security and identity protection concerns, direct services under this contract shall be performed within the borders of the United States.

Terrorism Country Divestments: In accordance with A.R.S. 35-392, CCOG and CCOG members are prohibited from purchasing from a company that is in violation of the Export Administration Act. By entering into the contract, contractor warrants compliance with the Export Administration Act.

The undersigned hereby accepts and agrees to comply with all statutory compliance and notice requirements listed in this document.

Does Respondent agree? YES
(Initials of Authorized Representative)

Date: March 27, 2025

(The rest of this page is intentionally left blank)

PROPOSAL FORM 17: NEW JERSEY REQUIREMENTS

Please answer the following question. If yes, complete this Proposal Form.

Does the awarded supplier intend to make their products and services available to public agencies in the State of New Jersey?	☒	Yes
	☐	No

In the event the Awarded Supplier desires to pursue public sector opportunities in the State of New Jersey, it is important to understand the requirements for working with those public agencies. The documentation and information contained in this proposal form are intended to provide the Respondent with documentation that could be relevant to the providing products & services to public agencies in the State of New Jersey. It is the responsibility of the public agency to ensure they are in compliance with local requirements.

New Jersey vendors are also required to comply with the following New Jersey statutes when applicable:

- All anti-discrimination laws, including those contained in N.J.S.A. 10:2-1 through N.J.S.A. 10:2-14, N.J.S.A. 10:5-1, and N.J.S.A. 10:5-31 through 10:5-38.
- Compliance with Prevailing Wage Act, N.J.S.A. 34:11-56.26, for all contracts within the contemplation of the Act.
- Compliance with Public Works Contractor Registration Act, N.J.S.A. 34:11-56.26
- Bid and Performance Security, as required by the applicable municipal or state statutes.

A. *Ownership Disclosure Form (N.J.S. 52:25-24.2)*

Pursuant to the requirements of P.L. 1999, Chapter 440 effective April 17, 2000 (Local Public Contracts Law), the Respondent shall complete the form attached to these specifications listing the persons owning 10 percent (10%) or more of the firm presenting the proposal.

Company Name:	**FieldTurf USA Inc.**
Street:	**175 N. Industrial Blvd NE**
City, State, Zip Code:	**Calhoun, GA 30701**

Complete as appropriate:

I, Click or tap here to enter text. *, certify that I am the sole owner of* Click or tap here to enter text.*, that there are no partners and the business is not incorporated, and the provisions of N.J.S. 52:25-24.2 do not apply.*

OR:

I, Click or tap here to enter text.*, a partner in* Click or tap here to enter text.*, do hereby certify that the following is a list of all individual partners who own a 10% or greater interest therein. I further certify that if one (1) or more of the partners is itself a corporation or partnership, there is also set forth the names and addresses of the stockholders holding 10% or more of that corporation's stock or the individual partners owning 10% or greater interest in that partnership.*

OR:

I, Darren Gill*, an authorized representative* FieldTurf USA, Inc.*, a corporation, do hereby certify that the following is a list of the names and addresses of all stockholders in the corporation who own 10% or more of its stock of any class. I further certify that if one (1) or more of such stockholders is itself a corporation or partnership, that there is also set forth the names and addresses of the stockholders holding 10% or more of the corporation's stock or the individual partners owning a 10% or greater interest in that partnership.*

(Note: If there are no partners or stockholders owning 10% or more interest, indicate none.)

Name	Address	Interest

FieldTurf Tarkett USA Holdings, Inc.	**175 N. Industrial Blvd NE Calhoun, GA 30701**	**100%**

I further certify that the statements and information contained herein, are complete and correct to the best of my knowledge and belief.

Signature: Darren Gull, Executive Vice President

Date: March 27, 2025

(The rest of this page is intentionally left blank)

SHARE CAPITAL STRUCTURE OF FIELDTURF USA INC

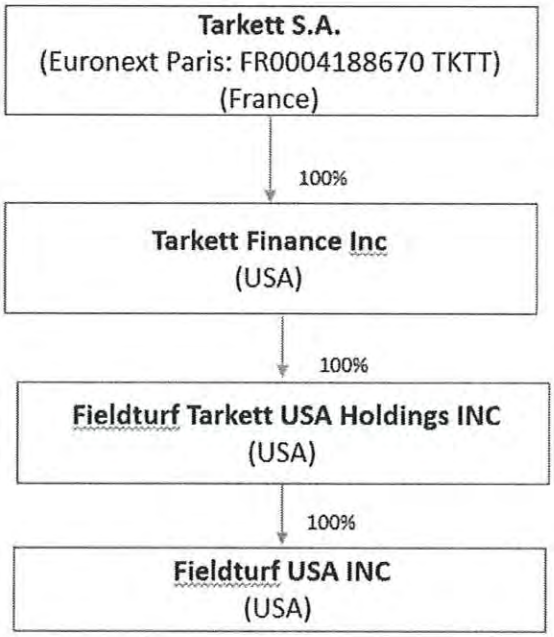

B. ***Non-Collusion Affidavit***

Respondent Name: **FieldTurf USA, Inc.**

Street Address: **175 N. Industrial Blvd NE**

City, State Zip: **Calhoun, GA 30701**

~~*State of New Jersey*~~ *Province of Quebec*

~~*County of Insert County name*~~ *City of Montreal*

I, Darren Gill, of the Province of Quebec, in the City of Montreal, being of full age, being duly sworn according to law on my oath depose and say that:

I am the Executive Vice President of the firm of FieldTurf USA, Inc. the Respondent making the Proposal for the goods, services or public work specified under the Harrison Township Board of Education attached proposal, and that I executed the said proposal with full authority to do so; that said Respondent has not directly or indirectly entered into any agreement, participated in any collusion, or otherwise taken any action in restraint of free, competitive bidding in connection with the above proposal, and that all statements contained in said bid proposal and in this affidavit are true and correct, and made with full knowledge that the Harrison Township Board of Education relies upon the truth of the statements contained in said bid proposal and in the statements contained in this affidavit in awarding the contract for the said goods, services or public work.

I further warrant that no person or selling agency has been employed or retained to solicit or secure such contract upon an agreement or understanding for a commission, percentage, brokerage or contingent fee, except bona fide employees or bona fide established commercial or selling agencies maintained by

Authorized signature: Darren Gill

Job Title: Executive Vice President

Subscribed and sworn before me

this 27th day of March, 20 25

Constance Vachon

Notary Public of ~~New Jersey~~ Province of Quebec

My commission expires April 26, 2026.

SEAL

COMMISSAIRE À L'ASSERMENTATION
CONSTANCE
VACHON
#146 457
POUR LE QUÉBEC

C. ***Affirmative Action Affidavit (P.L. 1975, C.127)***

Company Name: FieldTurf USA, Inc.

Street Address: 175 N. Industrial Blvd NE

City, State, Zip Code: Calhoun, GA 30701

Bid Proposal Certification:

Indicate below your compliance with New Jersey Affirmative Action regulations. Your proposal will be accepted even if you are not in compliance at this time. No contract and/or purchase order may be issued, however, until all Affirmative Action requirements are met.

Required Affirmative Action Evidence:

Procurement, Professional & Service Contracts (Exhibit A)

Suppliers must submit with proposal:

1. *A photo copy of their Federal Letter of Affirmative Action Plan Approval*

   OR

2. *A photo copy of their Certificate of Employee Information Report*

   OR

3. *A complete Affirmative Action Employee Information Report (AA302)*

Public Work – Over $50,000 Total Project Cost:

☒ *No approved Federal or New Jersey Affirmative Action Plan. We will complete Report Form AA201-A upon receipt from the Harrison Township Board of Education*

☐ *Approved Federal or New Jersey Plan – certificate enclosed*

I further certify that the statements and information contained herein, are complete and correct to the best of my knowledge and belief.

Authorized Signature: Darren Gull

Title of Signatory: Executive Vice President

Date: March 27, 2025

P.L. 1995, c. 127 (N.J.A.C. 17:27)

MANDATORY AFFIRMATIVE ACTION LANGUAGE

PROCUREMENT, PROFESSIONAL AND SERVICE CONTRACTS

During the performance of this contract, the contractor agrees as follows:

The contractor or subcontractor, where applicable, will not discriminate against any employee or applicant for employment because of age, race, creed, color, national origin, ancestry, marital status, sex, affectional or sexual orientation. The contractor will take affirmative action to ensure that such applicants are recruited and employed, and that employees are treated during employment, without regard to their age, race, creed, color, national origin, ancestry, marital status, sex, affectional or sexual orientation. Such action shall include, but not be limited to the following: employment, upgrading, demotion, or transfer; recruitment or recruitment

advertising; layoff or termination; rates of pay or other forms of compensation; and selection for training, including apprenticeship. The contractor agrees to post in conspicuous places, available to employees and applicants for employment, notices to be provided by the Public Agency Compliance Officer setting forth provisions of this non-discrimination clause.

The contractor or subcontractor, where applicable will, in all solicitations or advertisement for employees placed by or on behalf of the contractor, state that all qualified applicants will receive consideration for employment without regard to age, race, creed, color, national origin, ancestry, marital status, sex, affectional or sexual orientation.

The contractor or subcontractor, where applicable, will send to each labor union or representative of workers with which it has a collective bargaining agreement or other contract or understanding, a notice, to be provided by the agency contracting officer advising the labor union or workers' representative of the contractor's commitments under this act and shall post copies of the notice in conspicuous places available to employees and applicants for employment.

The contractor or subcontractor, where applicable, agrees to comply with any regulations promulgated by the Treasurer pursuant to P.L. 1975, c. 127, as amended and supplemented from time to time and the Americans with Disabilities Act.

The contractor or subcontractor agrees to attempt in good faith to employ minority and female workers trade consistent with the applicable county employment goal prescribed by N.J.A.C. 17:27-5.2 promulgated by the Treasurer pursuant to P.L. 1975, C.127, as amended and supplemented from time to time or in accordance with a binding determination of the applicable county employment goals determined by the Affirmative

Action Office pursuant to N.J.A.C. 17:27-5.2 promulgated by the Treasurer pursuant to P.L. 1975, C.127, as amended and supplemented from time to time.

The contractor or subcontractor agrees to inform in writing appropriate recruitment agencies in the area, including employment agencies, placement bureaus, colleges, universities, labor unions, that it does not discriminate on the basis of age, creed, color, national origin, ancestry, marital status, sex, affectional or sexual orientation, and that it will discontinue the use of any recruitment agency which engages in direct or indirect discriminatory practices.

The contractor or subcontractor agrees to revise any of it testing procedures, if necessary, to assure that all personnel testing conforms with the principles of job-related testing, as established by the statutes and court decisions of the state of New Jersey and as established by applicable Federal law and applicable Federal court decisions.

The contractor or subcontractor agrees to review all procedures relating to transfer, upgrading, downgrading and lay-off to ensure that all such actions are taken without regard to age, creed, color, national origin, ancestry, marital status, sex, affectional or sexual orientation, and conform with the applicable employment goals, consistent with the statutes and court decisions of the State of New Jersey, and applicable Federal law and applicable Federal court decisions.

The contractor and its subcontractors shall furnish such reports or other documents to the Affirmative Action Office as may be requested by the office from time to time in order to carry out the purposes of these regulations, and public agencies shall furnish such information as may be requested by the Affirmative Action Office for conducting a compliance investigation pursuant to Subchapter 10 of the Administrative Code (NJAC 17:27).

Signature of Procurement Agent Darren Gull Executive Vice President

(The rest of this page is intentionally left blank)

D. *C. 271 Political Contribution Disclosure Form*

PUBLIC AGENCY INSTRUCTIONS

This page provides guidance to public agencies entering into contracts with business entities that are required to file Political Contribution Disclosure forms with the agency. **It is not intended to be provided to contractors.** What follows are instructions on the use of form local units can provide to contractors that are required to disclose political contributions pursuant to N.J.S.A. 19:44A-20.26 (P.L. 2005, c. 271, s.2). Additional information is available in Local Finance Notice 2006-1 (https://www.nj.gov/dca/divisions/dlgs/resources/lfns_2006.html).

1. The disclosure is required for all contracts in excess of $17,500 that are **not awarded** pursuant to a "fair and open" process (N.J.S.A. 19:44A-20.7).
2. Due to the potential length of some contractor submissions, the public agency should consider allowing data to be submitted in electronic form (i.e., spreadsheet, pdf file, etc.). Submissions must be kept with the contract documents or in an appropriate computer file and be available for public access. **The form is worded to accept this alternate submission.** The text should be amended if electronic submission will not be allowed.
3. The submission must be **received from the contractor and** on file at least 10 days prior to award of the contract. Resolutions of award should reflect that the disclosure has been received and is on file.
4. The contractor must disclose contributions made to candidate and party committees covering a wide range of public agencies, including all public agencies that have elected officials in the county of the public agency, state legislative positions, and various state entities. The Division of Local Government Services recommends that contractors be provided a list of the affected agencies. This will assist contractors in determining the campaign and political committees of the officials and candidates affected by the disclosure.
    a) The Division has prepared model disclosure forms for each county. They can be downloaded from the "County PCD Forms" link on the Pay-to-Play web site at https://www.state.nj.us/dca/divisions/dlgs/programs/pay_2_play.html They will be updated from time-to-time as necessary.
    b) A public agency using these forms **should edit them to properly reflect the correct legislative district**(s). As the forms are county-based, **they list all legislative districts** in each county. **Districts that do not represent the public agency should be removed from the lists.**
    c) Some contractors may find it easier to provide a single list that covers all contributions, regardless of the county. These submissions are appropriate and should be accepted.
    d) The form may be used "as-is", subject to edits as described herein.
    e) The "Contractor Instructions" sheet is intended to be provided with the form. It is recommended that the Instructions and the form be printed on the same piece of paper. The form notes that the Instructions are printed on the back of the form; where that is not the case, the text should be edited accordingly.
    f) The form is a Word document and can be edited to meet local needs, and posted for download on web sites, used as an e-mail attachment, or provided as a printed document.
5. It is recommended that the contractor also complete a "Stockholder Disclosure Certification." This will assist the local unit in its obligation to ensure that contractor did not make any prohibited contributions to the committees listed on the Business Entity Disclosure Certification in the 12 months prior to the contract. (See Local Finance Notice 2006-7 for additional information on this obligation) A sample Certification form is part of this package and the instruction to complete it is included in the Contractor Instructions. **NOTE: This section is not applicable to Boards of Education.**

CONTRACTOR INSTRUCTIONS

Business entities (contractors) receiving contracts from a public agency in the state of New Jersey that are NOT awarded pursuant to a "fair and open" process (defined at N.J.S.A. 19:44A-20.7) are subject to the provisions of P.L. 2005, c. 271, s.2 (N.J.S.A. 19:44A-20.26). This law provides that 10 days prior to the award of such a contract, the contractor shall disclose contributions to:

- any State, county, or municipal committee of a political party
- any legislative leadership committee[*]
- any continuing political committee (a.k.a., political action committee)
- any candidate committee of a candidate for, or holder of, an elective office:
    - of the public entity awarding the contract
    - of that county in which that public entity is located
    - of another public entity within that county
    - or of a legislative district in which that public entity is located or, when the public entity is a county, of any legislative district which includes all or part of the county. The disclosure must list reportable contributions to any of the committees that exceed $300 per election cycle that were made during the 12 months prior to award of the contract. See N.J.S.A. 19:44A-8 and 19:44A-16 for more details on reportable contributions.

N.J.S.A. 19:44A-20.26 itemizes the parties from whom contributions must be disclosed when a business entity is not a natural person. This includes the following:

- individuals with an "interest" ownership or control of more than 10% of the profits or assets of a business entity or 10% of the stock in the case of a business entity that is a corporation for profit
- all principals, partners, officers, or directors of the business entity or their spouses
- any subsidiaries directly or indirectly controlled by the business entity
- IRS Code Section 527 New Jersey based organizations, directly or indirectly controlled by the business entity and filing as continuing political committees, (PACs). When the business entity is a natural person, "a contribution by that person's spouse or child, residing therewith, shall be deemed to be a contribution by the business entity." [N.J.S.A. 19:44A-20.26(b)] The contributor must be listed on the disclosure. Any business entity that fails to comply with the disclosure provisions shall be subject to a fine imposed by ELEC in an amount to be determined by the Commission which may be based upon the amount that the business entity failed to report. The enclosed list of agencies is provided to assist the contractor in identifying those public agencies whose elected official and/or candidate campaign committees are affected by the disclosure requirement. It is the contractor's responsibility to identify the specific committees to which contributions may have been made and need to be disclosed. The disclosed information may exceed the minimum requirement. The enclosed form, a content-consistent facsimile, or an electronic data file containing the required details (along with a signed cover sheet) may be used as the contractor's submission and is disclosable to the public under the Open Public Records Act. The contractor must also complete the attached Stockholder Disclosure Certification. This will assist the agency in meeting its obligations under the law.

NOTE: This section does not apply to Board of Education contracts.

[1] N.J.S.A. 19:44A-3(s): "The term "legislative leadership committee" means a committee established, authorized to be established, or designated by the President of the Senate, the Minority Leader of the Senate, the Speaker of the General Assembly or the Minority Leader of the General Assembly pursuant to section 16 of P.L.1993, c.65 (C.19:44A-10.1) for the purpose of receiving contributions and making expenditures."

C. 271 POLITICAL CONTRIBUTION DISCLOSURE FORM

Required Pursuant To N.J.S.A. 19:44A-20.26

This form or its permitted facsimile must be submitted to the local unit no later than 10 days prior to the award of the contract.

Part I – Vendor Information

Vendor Name:	FieldTurf USA, Inc.		
Address:	175 North Industrial Blvd NE		
City:	Calhoun	State:GA	Zip:30701

The undersigned being authorized to certify, hereby certifies that the submission provided herein represents compliance with the provisions of N.J.S.A. 19:44A-20.26 and as represented by the Instructions accompanying this form.

	Darren Gill	Executive Vice President
Signature of Vendor	Printed Name	Title

Part II – Contribution Disclosure

Disclosure requirement: Pursuant to N.J.S.A. 19:44A-20.26 this disclosure must include all reportable political contributions (more than $300 per election cycle) over the 12 months prior to submission to the committees of the government entities listed on the form provided by the local unit.

☐ Check here if disclosure is provided in electronic form.

Contributor Name	Recipient Name	Date	Dollar Amount
None			$

☐ Check here if the information is continued on subsequent page(s)

Continuation Page

C. 271 POLITICAL CONTRIBUTION DISCLOSURE FORM

Required Pursuant To N.J.S.A. 19:44A-20.26

Page ___ of _____

Vendor Name:

Contributor Name	Recipient Name	Date	Dollar Amount
Contributor Name	Recipient Name	Date	Amount
Contributor Name	Recipient Name	Date	Amount
Contributor Name	Recipient Name	Date	Amount
Contributor Name	Recipient Name	Date	Amount
Contributor Name	Recipient Name	Date	Amount
Contributor Name	Recipient Name	Date	Amount
Contributor Name	Recipient Name	Date	Amount
Contributor Name	Recipient Name	Date	Amount
Contributor Name	Recipient Name	Date	Amount
Contributor Name	Recipient Name	Date	Amount
Contributor Name	Recipient Name	Date	Amount
Contributor Name	Recipient Name	Date	Amount
Contributor Name	Recipient Name	Date	Amount
Contributor Name	Recipient Name	Date	Amount
Contributor Name	Recipient Name	Date	Amount
Contributor Name	Recipient Name	Date	Amount
Contributor Name	Recipient Name	Date	Amount
Contributor Name	Recipient Name	Date	Amount
Contributor Name	Recipient Name	Date	Amount
Contributor Name	Recipient Name	Date	Amount
Contributor Name	Recipient Name	Date	Amount
Contributor Name	Recipient Name	Date	Amount
Contributor Name	Recipient Name	Date	Amount
Contributor Name	Recipient Name	Date	Amount
Contributor Name	Recipient Name	Date	Amount
Contributor Name	Recipient Name	Date	Amount
Contributor Name	Recipient Name	Date	$Amount
Contributor Name	Recipient Name	Date	$Amount
Contributor Name	Recipient Name	Date	$Amount
Contributor Name	Recipient Name	Date	$Amount
Contributor Name	Recipient Name	Date	$Amount

☐ Check here if the information is continued on subsequent page(s)

List of Agencies with Elected Officials Required for Political Contribution Disclosure

N.J.S.A. 19:44A-20.26

County Name:

State: Governor, and Legislative Leadership Committees

Legislative District #s:

State Senator and two members of the General Assembly per district.

County:

Freeholders	County Clerk	Sheriff
{County Executive}	Surrogate	

Municipalities (Mayor and members of governing body, regardless of title):

USERS SHOULD CREATE THEIR OWN FORM, OR DOWNLOAD FROM WWW.NJ.GOV/DCA/LGS/P2P **A COUNTY-BASED, CUSTOMIZABLE FORM.**

E. *Stockholder Disclosure Certification*

Name of Business:

☒ I certify that the list below contains the names and home addresses of all stockholders holding 10% or more of the issued and outstanding stock of the undersigned.

OR

☐ I certify that no one stockholder owns 10% or more of the issued and outstanding stock of the undersigned.

Check the box that represents the type of business organization:

☐ Partnership
☒ Corporation
☐ Sole Proprietorship
☐ Limited Partnership
☐ Limited Liability Corporation
☐ Limited Liability Partnership
☐ Subchapter S Corporation

Sign and notarize the form below, and, if necessary, complete the stockholder list below.

Stockholders:

Name: FieldTurf Tarkett USA Holdings Inc. (100%) Home Address: 175 N. Industrial Blvd NE Calhoun, GA 30701	Name: Stockholder Name Home Address: Home Address
Name: Stockholder Name	Name: Stockholder Name

Home Address: Home Address	Home Address: Home Address
Name: Stockholder Name Home Address: Home Address	Name: Stockholder Name Home Address: Home Address
Subscribed and sworn before me this 27th day of march, 2025 Constance Vachon (Notary Public) My Commission expires: april 26, 2026	(Affiant) Darren Gill Executive Vice President (Print name & title of affiant) (Corporate Seal)

COMMISSAIRE À L'ASSERMENTATION
CONSTANCE VACHON
#146 457
POUR LE QUÉBEC

FIELDTURF USA INC.
1996
FLORIDA

(The rest of this page is intentionally left blank)

STATE OF NEW JERSEY
BUSINESS REGISTRATION CERTIFICATE

Taxpayer Name:	FIELDTURF USA INC.
Trade Name:	
Address:	175 N. INDUSTRIAL BLVD CALHOUN, GA 30701
Certificate Number:	0933885
Effective Date:	September 06, 2002
Date of Issuance:	April 02, 2025

For Office Use Only:

20250402000050638

https://www1.state.nj.us/TYTR_BRC/servlet/common/BRCLogin Return

STATE OF NEW JERSEY

Certificate of Authority

DIVISION OF TAXATION
TRENTON, N.J. 08646

The person, partnership or corporation named below is hereby authorized to collect

NEW JERSEY SALES & USE TAX

pursuant to N.J.S.A. 54:32B-1 ET SEQ.

This authorization is good ONLY for the named person at the location specified herein.
This authorization is null and void if any change of ownership or address is effected

Director, Division of Taxation

FIELDTURF USA INC.
175 N. INDUSTRIAL BLVD
CALHOUN GA 30701

Tax Registration No. XXX-XXX-410/000

Tax Effective Date 09-30-02

Document Locator No. C0000005577

Date Issued 06-25-13

This Certificate is NOT assignable or transferable. It must be conspicuously displayed at above address.

Certification **34146**

CERTIFICATE OF EMPLOYEE INFORMATION REPORT

RENEWAL

This is to certify that the contractor listed below has submitted an Employee Information Report pursuant to N.J.A.C. 17:27-1.1 et. seq. and the State Treasurer has approved said report. This approval will remain in effect for the period of **15-Mar-2022** to **15-Mar-2025**

FIELDTURF USA, INC.

175 N. INDUSTRIAL BOULEVARD NE

CALHOUN GA 30701

ELIZABETH MAHER MUOIO
State Treasurer

Please note that we are currently in the renewal process for our new certificate.
We will provide the new certificate once received.

FieldTurf
A Tarkett Sports Company

THE ULTIMATE
SURFACE EXPERIENCE

Connie Vachon
Senior Paralegal
Direct Line: 514-375-2570
Email: connie.vachon@fieldturf.com

March 13, 2025

VIA FEDEX

State of New Jersey
Department of Treasury
Division of Purchase and Property
EEO Monitoring Program
33 West State Street, 9th Floor
Trenton, NJ 08625

Re: FieldTurf USA, Inc.
Certificate of Employee Information Report Renewal (Certificate #34146)

Dear Sir, Dear Madam,

Enclosed please find FieldTurf USA, Inc.'s renewal documents for its Certificate of Employee Information Report (certificate #34146) together with the prescribed fee of $150.00.

Should you have any questions or need further information, please do not hesitate to communicate with me.

Yours truly,

Connie Vachon
Senior Paralegal

Encls.

Fieldturf USA Inc.

063282

SUPPLIER NO. : 46537 NAME: STATE OF NEW JERSEY DATE: 03/05/2025

REFERENCE	DATE	GROSS AMT.	DISCOUNT	NET AMOUNT
03/05/2025	03/05/2025	150.00	0.00	150.00
	TOTAL >	150.00	0.00	150.00

THIS CHECK IS VOID WITHOUT A BLUE & RED BACKGROUND AND A WATERMARK - HOLD UP TO THE LIGHT TO VERIFY

FieldTurf
A Tarkett Sports Company

Fieldturf USA Inc.
175 NORTH INDUSTRIAL BLVD.
CALHOUN, GA 30701
Ph: 514-340-9311 Fax: 514-340-0857

Bank of America

R/T 111000012
32-1/1110 GL

CHEQUE NO 063282

DATE 03/05/2025

AMOUNT $ *****150.00

US FUNDS

PAY ONE HUNDRED AND FIFTY DOLLARS AND 00 CENTS

TO THE ORDER OF: STATE OF NEW JERSEY
DEPARTMENT OF TREASURY
33 WEST STATE STREET
TRENTON, NJ 08625-0206
USA

CHECK IS PRINTED ON SECURITY PAPER WHICH INCLUDES A MICROPRINT BORDER & FLUORESCENT FIBERS

⑈063282⑈ ⑆111000012⑆4427657126⑈

Form AA302
Rev. 11/11

STATE OF NEW JERSEY

Division of Purchase & Property
Contract Compliance Audit Unit
EEO Monitoring Program

EMPLOYEE INFORMATION REPORT

IMPORTANT-READ INSTRUCTIONS CAREFULLY BEFORE COMPLETING FORM. FAILURE TO PROPERLY COMPLETE THE ENTIRE FORM AND TO SUBMIT THE REQUIRED $150.00 FEE MAY DELAY ISSUANCE OF YOUR CERTIFICATE. DO NOT SUBMIT EEO-1 REPORT FOR SECTION B, ITEM 11. For Instructions on completing the form, go to: http://www.state.nj.us/treasury/contract_compliance/pdf/aa302ins.pdf

SECTION A - COMPANY IDENTIFICATION

1. FID. NO. OR SOCIAL SECURITY: 58-2330410

2. TYPE OF BUSINESS: ☐ 1. MFG ☐ 2. SERVICE ☐ 3. WHOLESALE ☐ 4. RETAIL ☑ 5. OTHER

3. TOTAL NO. EMPLOYEES IN THE ENTIRE COMPANY: 813

4. COMPANY NAME: Field Turf USA INC

5. STREET: 175 N. Industrial Blvd. NE | CITY: Calhoun | COUNTY: Gordon | STATE: GA | ZIP CODE: 30701

6. NAME OF PARENT OR AFFILIATED COMPANY (IF NONE, SO INDICATE): FieldTurg Tarkett USA Holdings Inc | CITY | STATE | ZIP CODE

7. CHECK ONE: IS THE COMPANY: ☐ SINGLE-ESTABLISHMENT EMPLOYER ☑ MULTI-ESTABLISHMENT EMPLOYER

8. IF MULTI-ESTABLISHMENT EMPLOYER, STATE THE NUMBER OF ESTABLISHMENTS IN NJ

9. TOTAL NUMBER OF EMPLOYEES AT ESTABLISHMENT WHICH HAS BEEN AWARDED THE CONTRACT

10. PUBLIC AGENCY AWARDING CONTRAC | CITY | COUNTY | STATE | ZIP CODE

Official Use Only	DATE RECEIVED	INAUG.DATE	ASSIGNED CERTIFICATION NUMBER

SECTION B - EMPLOYMENT DATA

11. Report all permanent, temporary and part-time employees ON YOUR OWN PAYROLL. Enter the appropriate figures on all lines and in all columns. Where there are no employees in a particular category, enter a zero. Include ALL employees, not just those in minority/non-minority categories, in columns 1, 2, & 3. *DO NOT SUBMIT AN EEO-1 REPORT.*

JOB CATEGORIES	ALL EMPLOYEES COL. 1 TOTAL (Cols.2 &3)	COL. 2 MALE	COL. 3 FEMALE	PERMANENT MINORITY/NON-MINORITY EMPLOYEE BREAKDOWN MALE: BLACK	HISPANIC	AMER. INDIAN	ASIAN	NON MIN.	FEMALE: BLACK	HISPANIC	AMER. INDIAN	ASIAN	NON MIN.
Officials/ Managers	124	105	19	0	2	0	1	52	1	3	0	0	9
Professionals	105	54	50	0	1	1	0	34	0	7	0	2	31
Technicians	130	120	10	3	34	0	1	25	0	3	0	0	5
Sales Workers	57	41	16	0	0	1	0	23	1	1	0	0	12
Office & Clerical	8	0	8	0	0	0	0	0	0	1	1	0	5
Craftworkers (Skilled)	14	14	0	0	3	0	0	8	0	0	0	0	0
Operatives (Semi-skilled)	55	48	7	1	15	0	1	18	0	1	0	0	4
Laborers (Unskilled)	185	119	66	9	79	0	1	23	1	41	1	0	17
Service Workers	2	2	0	0	1	0	0	1	0	0	0	0	0
TOTAL	680	503	177	13	135	2	4	184	3	57	2	2	83
Total employment From previous Report (if any)	530	435	95	13	140	0	1	192	3	11	0	0	58
Temporary & Part-Time Employees	The data below shall NOT be included in the figures for the appropriate categories above.												
	134	132	2	4	72	1	0	41	1	1	0	0	0

12. HOW WAS INFORMATION AS TO RACE OR ETHNIC GROUP IN SECTION B OBTAINED? ☑ 1. Visual Survey ☑ 2. Employment Record ☐ 3. Other (Specify)

13. DATES OF PAYROLL PERIOD USED From: 2/15/2025 To: 2/28/2025

14. IS THIS THE FIRST Employee Information Report Submitted? 1. YES ☐ 2. NO ☑

15. IF NO, DATE LAST REPORT SUBMITTED: MO 02 DAY 12 YEAR 2019

SECTION C - SIGNATURE AND IDENTIFICATION

16. NAME OF PERSON COMPLETING FORM (Print or Type): Marci Gregson | SIGNATURE: Marci Gregson | TITLE: HR Director | DATE: MO 3/ DAY 7 YEAR 2025

17. ADDRESS NO. & STREET: 175 N. Industrial Blvd. NE | CITY: Calhoun | COUNTY: Gordon | STATE: GA | ZIP CODE: 30707 | PHONE (AREA CODE, NO., EXTENSION): 706 - 671 - 6612

****

STATE OF NEW JERSEY DEPARTMENT OF THE TREASURY

Division of Purchase & Property Contract Compliance Audit Unit EEO Monitoring Program

VENDOR ACTIVITY SUMMARY REPORT

[✓] NEW HIRES [ ] PROMOTIONS [ ] TRANSFERS [ ] TERMINATIONS (CHECK (X) APPROPRIATE ACTIVITY)

CERTIFICATE NO. 34146 DATES OF PAYROLL PERIOD USED: FROM 2/6/2022 TO 7/25/2025

NAME OF FACILITY:

FieldTwt USA Inc.

Street	City	County	State	Zip Code
175 N Industrial Blvd. NE	Calhoun	Gordon	GA	30701

JOB CATAGORIES	MALE Total	Black	Hispanic	AM. Indian	Asian	Non-Min.	FEMALE Total	Black	Hispanic	AM. Indian	Asian	Non-Min.
OFFICIALS & MANAGERS	33					29	10	1	3			5
PROFESSIONALS	33		1	1		25	28	1	5		2	18
TECHNICIANS	149	7	84	1	1	53	7	1	3			3
SALES WORKERS	7					5	10	1	1			8
OFFICE & CLERICAL	0						5		1	1		3
CRAFTWORKERS	10		3			7	0					
OPERATIVES	24	1	10		1	10	6	1	1			4
LABORERS	97	8	65			22	47	1	32	1		10
SERVICE WORKERS	1					1	0					
TOTAL	354	16	163	2	2	152	113	6	46	2	2	51

I certify that the information on this Form is true and correct.

NAME OF PERSON COMPLETING FORM (Print or Type) SIGNATURE Noah Jones DATE SUBMITTED 3/13/2025

LAST	FIRST	MI
Jones	Noah	M

ADDRESS (NO. & STREET)	(CITY)	(STATE)	(ZIP)	PHONE (AREA CODE, NO., EXTENSION)
175 N Industrial Blvd. NE	Calhoun	GA	30701	706-625-6533

****

STATE OF NEW JERSEY DEPARTMENT OF THE TREASURY
Division of Purchase & Property Contract Compliance Audit Unit EEO Monitoring Program
VENDOR ACTIVITY SUMMARY REPORT

☐ NEW HIRES ☑ PROMOTIONS ☐ TRANSFERS ☐ TERMINATIONS (CHECK (X) APPROPRIATE ACTIVITY)

CERTIFICATE NO. 34146 DATES OF PAYROLL PERIOD USED: FROM 2/6/2025 TO 2/28/2025

NAME OF FACILITY: Field Turf USA Inc.

Street	City	County	State	Zip Code
175 N Industrial Blvd.	Calhoun	Gordon	GA	30701

JOB CATAGORIES	MALE Total	Black	Hispanic	AM. Indian	Asian	Non-Min.	FEMALE Total	Black	Hispanic	AM. Indian	Asian	Non-Min.
OFFICIALS & MANAGERS	22					10	5		1			3
PROFESSIONALS	6		1			3	13		1			9
TECHNICIANS	7					2	7		3			3
SALES WORKERS	2					2						
OFFICE & CLERICAL							2		1			1
CRAFTWORKERS	1		1									
OPERATIVES	14		5			7						
LABORERS	31	1	18			10	8	1	3			4
SERVICE WORKERS												
TOTAL	83	1	25			34	35	1	9			20

I certify that the information on this Form is true and correct.
NAME OF PERSON COMPLETING FORM (Print or Type) SIGNATURE [signature] DATE SUBMITTED 3/13/2025

LAST	FIRST	MI
Jones	Noah	M

ADDRESS (NO. & STREET)	(CITY)	(STATE)	(ZIP)	PHONE (AREA CODE, NO., EXTENSION)
175 N Industrial Blvd. NE	Calhoun	GA	30701	706-625-6533

****

STATE OF NEW JERSEY DEPARTMENT OF THE TREASURY

Division of Purchase & Property Contract Compliance Audit Unit EEO Monitoring Program

VENDOR ACTIVITY SUMMARY REPORT

☐ NEW HIRES ☐ PROMOTIONS ☑ TRANSFERS ☐ TERMINATIONS (CHECK (X) APPROPRIATE ACTIVITY)

CERTIFICATE NO. 34146 DATES OF PAYROLL PERIOD USED: FROM 2/6/2022 TO 2/28/2025

NAME OF FACILITY: Field Turf USA Inc.

Street	City	County	State	Zip Code
175 N Industrial Blvd. NE	Calhoun	Gordon	GA	30701

JOB CATAGORIES	MALE Total	Black	Hispanic	AM. Indian	Asian	Non-Min.	FEMALE Total	Black	Hispanic	AM. Indian	Asian	Non-Min.
OFFICIALS & MANAGERS	14		2		1	7	4					3
PROFESSIONALS	8		3			3	5		2			2
TECHNICIANS	5		1			1	1					1
SALES WORKERS	4					4	2					2
OFFICE & CLERICAL	1						5		2			2
CRAFTWORKERS	5					3						
OPERATIVES	6					1	7	1				
LABORERS	27	1	13			2	18	1	8			7
SERVICE WORKERS												
TOTAL	70	1	19		1	21	42	2	12			17

I certify that the information on this Form is true and correct.

NAME OF PERSON COMPLETING FORM (Print or Type) SIGNATURE [signature] DATE SUBMITTED 3/13/2025

LAST	FIRST	MI
Jones	Noah	M

ADDRESS (NO. & STREET)	(CITY)	(STATE)	(ZIP)	PHONE (AREA CODE, NO., EXTENSION)
175 N Industrial Blvd. NE	Calhoun	GA	30701	706-625-6533

****

STATE OF NEW JERSEY DEPARTMENT OF THE TREASURY
Division of Purchase & Property Contract Compliance Audit Unit EEO Monitoring Program
VENDOR ACTIVITY SUMMARY REPORT

☐ NEW HIRES ☐ PROMOTIONS ☐ TRANSFERS ☒ TERMINATIONS (CHECK (X) APPROPRIATE ACTIVITY)

CERTIFICATE NO. 34146 DATES OF PAYROLL PERIOD USED: FROM 2/6/2022 TO 2/28/2025

NAME OF FACILITY: FieldTurf USA Inc.

Street	City	County	State	Zip Code
175 N Industrial Blvd. NE	Calhoun	Gordon	GA	30701

JOB CATAGORIES	MALE Total	Black	Hispanic	AM. Indian	Asian	Non-Min.	FEMALE Total	Black	Hispanic	AM. Indian	Asian	Non-Min.
OFFICIALS & MANAGERS	27		4		1	8	3					1
PROFESSIONALS	9		4			2	19		2	1		12
TECHNICIANS	124	5	35		2	52	5		1			2
SALES WORKERS	13					11	4					3
OFFICE & CLERICAL	3						3		1			1
CRAFTWORKERS	7	1				4						
OPERATIVES	22	3	8			5	7	1	2			2
LABORERS	133	11	71		1	38	44	5	26			12
SERVICE WORKERS	1					1						
TOTAL	339	20	122		4	121	116	6	32	1		33

I certify that the information on this Form is true and correct.
NAME OF PERSON COMPLETING FORM (Print or Type) SIGNATURE [signature] DATE SUBMITTED 3/13/2025

LAST Jones FIRST Noah MI M

ADDRESS (NO. & STREET) 175 N Industrial Blvd. NE (CITY) Calhoun (STATE) GA (ZIP) 30701 PHONE (AREA CODE, NO., EXTENSION) 706-625-6533

Certificate Number
631021

Registration Date: 06/18/2023
Expiration Date: 06/17/2025

State of New Jersey

Department of Labor and Workforce Development
Division of Wage and Hour Compliance

Public Works Contractor Registration Act

Pursuant to N.J.S.A. 34:11-56.48, et seq. of the Public Works Contractor Registration Act, this certificate of registration is issued for purposes of bidding on any contract for public work or for engaging in the performance of any public work to:

FIELDTURF USA, INC.

2023

Responsible Representative(s):
Eric Daliere, President
Jennifer Hopper, Treasurer

Responsible Representative(s):
Marie-France Nantel, Secretary

Robert Asaro-Angelo, Commissioner
Department of Labor and Workforce Development

NON TRANSFERABLE

This certificate may not be transferred or assigned and may be revoked for cause by the Commissioner of Labor and Workforce Development.

STATE OF NEW JERSEY
SCHOOLS DEVELOPMENT AUTHORITY

32 EAST FRONT STREET
P.O. BOX 991
TRENTON, NJ 08625-0991

CONTRACTOR NOTICE OF PREQUALIFICATION

for

Fieldturf USA, Inc.
175 N. Industrial Blvd., NE
Calhoun, GA 30701

In accordance with N.J.S.A. 18A:7G-41 and any rules and regulations issued pursuant hereto, your firm has been approved with the NJSDA for Prequalification:

Effective Date: August 29, 2023
Expiration Date: September 11, 2025

Aggregate Limit: Unlimited

☐ Construction Manager as Constructor	☐ Sprinkler Systems	☐ Pile Driving
☐ Design Build	☐ Sheet Metal (Mechanical)	☐ Prefabrication Buildings
☐ General Construction	☐ Electrical	☐ Prefabrication Music/Sound Clean Rooms
☐ General Construction/Alterations & Additions	☐ Communications Systems	☐ Relocatable Buildings
☐ Partitions/Ceilings	☐ Fire Alarm/Signal Systems	☐ Asbestos Removal/Treatment
☐ Doors & Hardware	☐ Security/Intrusion Alarms	☐ Asbestos Removal/Mechanical
☐ Windows	☐ Audio Visual Systems	☐ Waste Removal Toxic/Hazardous
☐ Siding & Gutters	☐ Site Work	☐ Radon Mitigation
☐ Carpeting	☐ Sewage & Water Treatment Plants	☐ Lead Paint Abatement
☐ Flooring/Tile	☐ Sewer Piping & Storm Drains	☐ Detention Equipment Systems
☐ Millwork	☐ Landscape Construction	☐ Energy Management Systems
☐ Insulation	☐ Underground Water & Utilities	☐ Elevators
☐ Acoustical	☐ Road Construction & Paving	☐ Museum Exhibits
☐ Concrete/Foundation Footings/ Masonry Work	☐ Athletic Fields/Tracks/Courts	☐ Test Boring
☐ Gunite	☐ Athletic Fields/Synthetic Turf	☐ Well Drilling
☐ Demolition	☐ Pumping Stations	☐ Microbial Remediation
☐ Fencing	☐ Landscape Irrigation	☐ Food Service Equipment
☐ Historical Light Fixture Restoration	☐ Roofing-Membrane EPDM	☐ School Furnishings
☐ Historical Restoration	☐ Roofing-Membrane PVC/CPE/CSPE	☐ Lab Furniture/Equipment
☐ Pre-Cast Concrete	☐ Roofing-Membrane Modified Bitumen	☐ Seating/Bleachers
☐ Curtain Walls	☐ Roofing-Urethane	☐ Swimming Pools
☐ Architectural Cast Iron	☐ Roofing-Built Up	☐ Dust Collectors
☐ Welding	☐ Roofing-Metal	☐ Signage & Graphics
☐ Structural Steel & Ornamental Iron	☐ Roofing-Tile/Slate/Shingles	☐ Septic Systems
☐ Plumbing	☐ Caulking & Waterproofing	☐ Stage Equipment
☐ Oil & Gas Burners	☐ Scaffolding	☐ Underground Storage Tanks/Closure & Installation
☐ HVACR	☐ Roofing-Historical Sites	☐ Underground Storage Tanks/Installation
☐ Boilers (New Repair)	☐ Roofing-TPO	☐ Underground Storage Tanks/Closure
☐ Service Station	☐ Painting-General	☐ UST/Tank Testing
☐ Solar Energy Systems	☐ Painting-Tanks/Steel Structures/ Elevated Structures	☐ Underground Storage Tanks/ Corrosion Protection Systems Analysis
☐ Energy Services (ESCO)	☐ Painting-Historical Sites	☐ Above Ground Storage Tanks
☐ Geothermal Loop Systems	☐ Sandblasting	☐ Site Remediation
☐ Fireproof Applications	☐ Divers	☐ Inside Plant Cable
☐ Insulation (Mechanical)	☐ Barges	☐ Outside Plant Cable
☐ Fire Suppression Systems	☐ Bulkhead & Docks	☐ Fiber Installation & Splicing
☐ Control Systems	☐ Jetty & Breakwater	
☐ Parking & Control Systems	☐ Dredging	

ANY ATTEMPT TO ALTER OR MISREPRESENT ANY INFORMATION CONTAINED IN THIS NOTICE MAY RESULT IN PROSECUTION, DEBARMENT, AND/OR DISQUALIFICATION.

Information contained in this notice can be verified at: https://sda03.njsda.gov/PublicReportsUI/VendorSearch.aspx

NJSDA Risk Management – Prequalification Unit – 609-858-5356

FIELDTURF USA, Inc.		
STATE	**License Number**	**License Class**
Alabama	51948	General Contractor
Alabama	S-40652	Sub-Contractor
Alaska	CONE33631	General Contractor
Arizona	314411	Dual KA
Arkansas	172490623	General Contractor
California (Public Works License-DIR)	1000004625	DIR license
California	849044	Contractor Registration
Delaware	2008203565	331-Contractor-Resident
Florida	CGC1507328	General Contractor
Georgia	GCCO005138	General Contractor Company
Idaho (PWC)	PWC-C-16674-AAA-4	20790, 02740, 02310
Idaho (Burreau of Occupational Licenses - non-public bids)	RCE-38454	
Illinois Department of Human Rights	IDHR # 120963-00	n/a
Indiana	20230616	General Contractor
Iowa	C106260	Registered Contractor
Louisiana	CL.0045097	artificial turf, specialty, recreation & sporting facilities & golf courses
Minnesota	IR714564	Contractor Registration
Mississipi	16435-SC	Asphalt, Excavating, Grading & Drainage
Montana	156033	Construction Contractor
Nebraska	44678-22	Contractor Registration
Nevada	68611	C10 Limited to synthetic turf only
***New Jersey**	631021	Public Works Contractor
***New Jersey**		School Development Authority Prequal
New Mexico	363013	GF05 and GB98 (General Builder);
New Mexico	2471720120608	Department of Public Works (Workforce Solutions)
North Carolina	66648	General Contracting
North Dakota	49661	Class A Contractor
Oregon	181583	GC - Commercial & Residential
Rhode Island	40614	Class C Commercial
South Carolina	G116980	BD5 GD5 H15 BT5 MS5 RR5 WL5
Tennessee	57455	S-Athletic & S-Running
Utah	7330453-5501	E100, S310, S500
Virginia	2705106035	Class A Highway & Rec Facility
Washington	CC01 FIELDU1955JH	Construction Contractor
West Virginia	WV043760	General Building

Wyoming ****depends on county/city	3564	General
Wyoming ****depends on county/city	3074	Excavation & Grading
	3075	Miscellaenous

Outlook

Notice of Classification

From CClass@treas.state.nj.us <CClass@treas.state.nj.us>
Date Wed 9/4/2024 5:34 AM
To Vachon, Connie <Connie.Vachon@tarkettsports.com>

2 attachments (9 KB)
ATT00001.bin; ATT00002.bin;

***CAUTION: EXTERNAL e-mail** - Be Aware - sent by CClass@treas.state.nj.us*

FIELDTURF USA, INC.
175 N. INDUSTRIAL BLVD NE
CALHOUN, GA 30701

State of New Jersey

DEPARTMENT OF THE TREASURY
DIVISION OF PROPERTY MANAGEMENT AND CONSTRUCTION
33 WEST STATE STREET - P.O. BOX 034
TRENTON, NEW JERSEY 08625-0034

NOTICE OF CLASSIFICATION

In accordance with N.J.S.A. 18A:18A-27 et seq (Department of Education) and N.J.S.A. 52:35-1 (Department of the Treasury) and any rules and regulations issued pursuant hereto, you are hereby notified of your classification to do State work for the Department (s) as previously noted.

Aggregate Amount	Trade(s) & License(s)	Effective Date	Expiration Date
Unlimited	C061 -ATHLETIC FIELDS/SYNTHETIC TURF C060 -ATHLETIC FIELDS/TRACKS/COURTS C057 -LANDSCAPE CONSTRUCTION C059 -ROAD CONSTRUCTION & PAVING C056 -SEWER PIPING & STORM DRAINS C054 -SITE WORK C058 -UNDERGROUND WATER & UTILITIES	09/12/2023 09/12/2023 08/30/2024 08/30/2024 08/30/2024 08/30/2024 08/30/2024	09/11/2025

- Licenses associated with certain trades are on file with the Division of Property Management & Construction (DPMC).
- Current license information must be verified prior to bid award.
- A copy of the DPMC 701 Form (Total Amount of Uncompleted Projects) may be accessed from the DPMC website at https://www.nj.gov/treasury/dpmc/Assets/Files/DPMC701.pdf.

ANY ATTEMPT BY A CONTRACTOR TO ALTER OR MISREPRESENT ANY INFORMATION CONTAINED IN THIS FORM MAY RESULT IN PROSECUTION AND/OR DEBARMENT, SUSPENSION OR DISQUALIFICATION. INFORMATION ON AGGREGATE AMOUNTS CAN BE VERIFIED ON THE DPMC WEB SITE.

PROPOSAL FORM 18: GENERAL TERMS AND CONDITIONS ACCEPTANCE FORM

Check one of the following responses to the General Terms and Conditions in this solicitation, including the Master Agreement:

☒ We take no exceptions/deviations to the general terms and conditions. *(**Note**: If none are listed below, it is understood that no exceptions/deviations are taken.)*

☐ We take the following exceptions/deviations to the general terms and conditions. All exceptions/deviations must be clearly explained. Reference the corresponding general terms and conditions that you are taking exceptions/deviations to. Clearly state if you are adding additions terms and conditions to the general terms and conditions. Provide details on your exceptions/deviations below:

Click or tap here to enter text.

*(**Note**: Unacceptable exceptions shall remove your proposal from consideration for award. CCOG shall be the sole judge on the acceptance of exceptions/deviations and the decision shall be final.)*

PROPOSAL FORM 19: EQUALIS GROUP ADMINISTRATION AGREEMENT DECLARATION

Attachment A - Sample Administration Agreement of this solicitation is for reference only. Contracting with Equalis Group and the Winning Supplier will occur after contract award.

Execution of the Administration Agreement is required for the Master Agreement to be administered by Equalis Group. **Attachment A - Sample Administration Agreement** defines i) the roles and responsibilities of both parties relating to marketing and selling the Program to current and prospective Members, and ii) the financial terms between Equalis Group and Winning Supplier.

Redlined copies of this agreement should not be submitted with the response. Should a Respondent be recommended for award, this agreement will be negotiated and executed between Equalis Group and the Respondent. Respondents must select one of the following options for submitting their response.

- ☒ Respondent agrees to all terms and conditions in **Attachment A - Sample Administration Agreement**.
- ☐ Respondent wishes to negotiate directly with Equalis Group on terms and conditions in the Sample Administration Agreement. Negotiations will commence with Equalis Group after CCOG has completed the contract award.

PROPOSAL FORM 20: MASTER AGREEMENT SIGNATURE FORM

RESPONDENTS MUST SUBMIT THIS FORM COMPLETED AND SIGNED WITH THEIR RESPONSE TO BE CONSIDERED FOR AWARD. RESPONDENTS WHO FAIL TO DO SO WILL BE DETERMINED UNRESPONSIVE AND WILL NO LONGER BE CONSIDERED FOR AWARD.

The undersigned hereby proposes and agrees to furnish Products & Services in strict compliance with the terms, specifications, and conditions contained within this RFP and the Master Agreement at the prices proposed within the submitted proposal unless noted in writing. The undersigned further certifies that he/she is an officer of the company and has authority to negotiate and bind the company named below and has not prepared this proposal in collusion with any other Respondent and that the contents of this proposal as to prices, terms or conditions of said proposal have not been communicated by the undersigned nor by any employee or agent to any person engaged in this type of business prior to the official opening of this proposal.

Company Name	FieldTurf USA, Inc.
Address	175 N. Industrial Blvd NE
City/State/Zip	Calhoun, GA, 30701
Phone Number	514 375 2584
Email Address	Dgill@fieldturf.com
Printed Name	Darren Gill
Job Title	Executive Vice President
Authorized Signature	

Initial Term of the Master Agreement

Contract Effective Date:	July 1, 2025
Contract Expiration Date:	June 30, 2029
Contract Number:	

*(**Note**: Contract Number will be applied prior to CCOG and Equalis Group countersigning.)*

The Cooperative Council of Governments, Inc.
6001 Cochran Road, Suite 333
Cleveland, Ohio 44139

By: _____
Name: Franklyn A. Corlett
As: CCOG Board President
Date: _____

Equalis Group, LLC.
5540 Granite Parkway, Suite 200
Plano, Texas 75024

By: _____
Name: Eric Merkle
As: EVP, Procurement & Operations
Date: _____

FieldTurf
A Tarkett Sports Company

Manufacturer's Limited Warranty

FieldTurf warrants that if **FieldTurf FT CORE** (Product) for multi-sport use synthetic turf proves to be defective in material, installation workmanship, therefore resulting in premature wear, during normal and ordinary use of the Product for the sporting activities provided herein or for any other uses for which FieldTurf has provided its written authorization, within **ten (10) years** from the date of completion of installation as indicated in this Warranty, FieldTurf shall either repair or replace the affected area of the Product in accordance with the terms of this Warranty. FieldTurf's sole liability under this Warranty shall be limited to either repair or replacement of the affected area of the Product, at its sole discretion, and FieldTurf shall have no other obligations or liabilities with respect to defects of the Product. FieldTurf will, at FieldTurf's option, either repair or replace the affected area to the extent required to meet the Warranty period, but no cash refunds will be made. This Warranty shall commence upon the date of completion indicated in this Warranty. The accompanying Warranty service will not come into effect unless and until FieldTurf's Certificate of Completion is sent for validation to the corporate office of FieldTurf indicated herein within thirty (30) days of the date of completion or Purchaser's first use, whichever occurs first. In all cases, the Warranty shall be deemed to commence upon the date of completion indicated in this Warranty. The acceptance form of the terms and conditions contained in FieldTurf's Maintenance Guidelines must also be provided to FieldTurf's corporate office within thirty (30) days of completion of installation. This Warranty is limited to the remedies of repair or replacement, which shall constitute the exclusive remedies available under this Warranty; all other remedies or recourses which might otherwise be available are hereby waived by the Purchaser. FieldTurf will have no other obligations or liability for damages arising out of or in connection with the use or performance of the Product, including, but without limitation, damages for personal injury and/or economic losses. This Warranty shall not come into effect, and FieldTurf shall have no obligations under this Warranty, unless and until FieldTurf is paid in full for the Product to be warranted hereunder.

Field Markings: (sports markings to be specified)

Other Exclusions

EXCEPT AS EXPRESSLY SET FORTH IN THE MANUFACTURER'S LIMITED WARRANTY ABOVE, FIELDTURF DISCLAIMS ALL OTHER WARRANTIES OF ANY KIND, EXPRESS OR IMPLIED, IN FACT OR IN LAW, INCLUDING, BUT NOT LIMITED TO, THE IMPLIED WARRANTIES OF MERCHANTABILITY AND FITNESS FOR A PARTICULAR PURPOSE.

THIS WARRANTY SHALL BECOME NULL AND VOID IF THE PURCHASER FAILS TO MAINTAIN THE FIELD IN ACCORDANCE WITH THE FIELDTURF MAINTENANCE GUIDELINES AND SCHEDULE PROVIDED BY FIELDTURF THEREIN. ALL MAINTENANCE SHALL BE PERFORMED BY FIELDTURF-TRAINED AND/OR FIELDTURF-AUTHORIZED MAINTENANCE PERSONNEL ONLY.

Furthermore, this Manufacturer's Limited Warranty ***does not cover***:

1. Any damage resulting, directly or indirectly, from *force majeure*, accident, misuse, intentional and unintentional abuse, infill displacement, neglect; or from usage, unintentional or otherwise, that cannot reasonably be considered as normal play or ordinary use of the Product. For purposes of this Warranty, normal play and ordinary use shall mean usage up to 3,000 hours per year of regular play and utilization for the sporting activities provided herein; normal play and ordinary use also includes a reasonable number of users or participants, but does not include repetitive marching, repetitive training or high-intensity drills on the same part of the field, especially in the areas including, but not limited to, home plate, pitcher's mound, base areas, base paths, soccer penalty mark/spot areas, goal areas, sideline areas and lacrosse crease areas, all of which require frequent maintenance in accordance with FieldTurf Maintenance Guidelines and which may require regular replacement. This Warranty is expressly conditioned upon the Customer completing and submitting the FieldTurf Maintenance Log provided in FieldTurf's Maintenance Guidelines.

2. Damage resulting from failure to maintain the Product in accordance with FieldTurf's Maintenance Guidelines provided to the Purchaser. The Purchaser shall keep a log of all maintenance performed on the Product and supply FieldTurf with a copy upon request.

SAMPLE

FieldTurf
A Tarkett Sports Company

Manufacturer's Limited Warranty

3. Damage resulting from repair, attempted repair and/or maintenance by anyone other than FieldTurf, an authorized FieldTurf distributor or an authorized FieldTurf maintainer.

4. Damage due to causes which include, but are not limited to, the application of chemicals and/or cleaning agents, adhesive backing, dirt, traffic, negligence, vandalism, fire, flood, windstorm, animals, improper care and Acts of God.

5. Failure and/or improper design of the base; depression of the soil, subsurface or other matter upon which the base or Product rests; and any and all resulting damage to the Product arising therefrom.

6. FieldTurf does not warrant the percolation rate, long term planarity and/or compaction of the base which the product is installed. **FIELDTURF DISCLAIMS ALL WARRANTIES AS TO THE BASE, EXPRESS OR IMPLIED, AND ANY AND ALL RESULTING DAMAGE TO THE PRODUCT ARISING THEREFROM**.

7. Damage resulting from the use of improper footwear such as long-spiked track shoes, regular and repeated use of steel cleats, and flat-soled shoes. Standard molded soccer or football cleats are recommended.

8. Damage resulting from the inadequate installation, improper maintenance and/or other failure of any third party shock pad or underlayment pad installed beneath the Product, including, but not limited to, detachment of the Product caused by expansion and/or contraction of the third party shock pad or underlayment pad.

All synthetic turf is subject to normal wear and tear, which does not constitute a manufacturing defect and is not covered by this Warranty. In addition to the other factors listed in this Warranty and without limitation, the extent of the wear and tear depends on the construction of synthetic turf (fiber face weight, stitch rate, fiber pile height and gauge, infill components and maintenance of the field) and the intensity of use of the synthetic turf. The Product will be stable to light fading with the maximum fading of the Product during the Warranty period not to exceed fifteen percent (15%) of color loss annually based upon an acceptable grey scale. This Warranty does not cover slight variations or gradations of color within the Product and/or face distortion. Normal behavior of the fiber and infill with respect to the wear pattern of a field is more fully explained in the "Field Settling" document, provided in the FieldTurf After-Sales Service Package.

FieldTurf disclaims all liability for incidental and consequential damages for breach of any express or implied warranty, including any implied warranty of merchantability, with respect to the Product. In the event that the Product be used for purposes other than the sporting activities provided herein or for any other uses for which FieldTurf has provided its written authorization, FieldTurf shall not be responsible for damages resulting therefrom and, therefore, this Warranty, as well as any and all applicable legal warranties, shall become **null and void** as Purchaser understands that FieldTurf has tested the Product for use in connection with the said sporting activities and/or uses, and that it may not have tested the Product for other such uses. Any Product repairs or replacements performed under the terms of this Warranty shall not extend the term of this Warranty.

Name of Purchaser:	*Sporting Activities:*	Multi-Sport Use
Date of Completion:	*Installed by:*	FieldTurf USA, Inc.
Location:	*City:*	
Address:	*Zip:*	
State:	*Fax/email:*	
Tel:		
Signature:	*Name :*	
Date:	*Reference:*	

Disclaimer. The information in this document is subject to change without notice and should not be construed as a commitment by FieldTurf USA, Inc. FieldTurf assumes no responsibility for any errors that may appear in this document.

SAMPLE

This warranty is insured by a third party.

For more information please contact Customer Service at FieldTurf at the number listed below.
7445 Côte-de-Liesse Road Suite 200, Montreal, QC, Canada H4T 1G2 • Toll Free: 1-800-724-2969 •

FieldTurf
A Tarkett Sports Company

Manufacturer's Limited Warranty

FieldTurf warrants that if **FieldTurf** for multi-sport use synthetic turf proves to be defective in material or installation workmanship, therefore, resulting in premature wear, during normal and ordinary use of the Product for the sporting activities provided herein or for any other uses for which FieldTurf has provided its written authorization, within **two (2) years** from the date of completion of installation as indicated in this Warranty, FieldTurf shall either repair or replace the affected area of the Product in accordance with the terms of this Warranty. FieldTurf's sole liability under this Warranty shall be limited to either repair or replacement of the affected area of the Product, at its sole discretion, and FieldTurf shall have no other obligations or liabilities with respect to defects of the Product. FieldTurf will, at FieldTurf's option, either repair or replace the affected area to the extent required to meet the Warranty period, but no cash refunds will be made**.** This Warranty shall commence upon the date of completion indicated in this Warranty. The accompanying Warranty service will not come into effect unless and until FieldTurf's Certificate of Completion is sent for validation to the corporate office of FieldTurf indicated herein within thirty (30) days of the date of completion or Purchaser's first use, whichever occurs first. In all cases, the Warranty shall be deemed to commence upon the date of completion indicated in this Warranty. The acceptance form of the terms and conditions contained in FieldTurf's Maintenance Guidelines must also be provided to FieldTurf's corporate office within thirty (30) days of completion of installation. This Warranty is limited to the remedies of repair or replacement, which shall constitute the exclusive remedies available under this Warranty; all other remedies or recourses which might otherwise be available are hereby waived by the Purchaser. FieldTurf will have no other obligations or liability for damages arising out of or in connection with the use or performance of the Product, including, but without limitation, damages for personal injury and/or economic losses. This Warranty shall not come into effect, and FieldTurf shall have no obligations under this Warranty, unless and until FieldTurf is paid in full for the Product to be warranted hereunder.

Field Markings: To be determined

Other Exclusions

EXCEPT AS EXPRESSLY SET FORTH IN THE MANUFACTURER'S LIMITED WARRANTY ABOVE, FIELDTURF DISCLAIMS ALL OTHER WARRANTIES OF ANY KIND, EXPRESS OR IMPLIED, IN FACT OR IN LAW, INCLUDING, BUT NOT LIMITED TO, THE IMPLIED WARRANTIES OF MERCHANTABILITY AND FITNESS FOR A PARTICULAR PURPOSE.

THIS WARRANTY SHALL BECOME NULL AND VOID IF THE PURCHASER FAILS TO MAINTAIN THE FIELD IN ACCORDANCE WITH THE FIELDTURF MAINTENANCE GUIDELINES AND SCHEDULE PROVIDED BY FIELDTURF THEREIN. ALL MAINTENANCE SHALL BE PERFORMED BY FIELDTURF-TRAINED AND/OR FIELDTURF-AUTHORIZED MAINTENANCE PERSONNEL ONLY.

Furthermore, this Manufacturer's Limited Warranty ***does not cover***:

1. Any damage resulting, directly or indirectly, from *force majeure*, accident, misuse, intentional and unintentional abuse, infill displacement, neglect; or from usage, unintentional or otherwise, that cannot reasonably be considered as normal play or ordinary use of the Product. For purposes of this Warranty, normal play and ordinary use shall mean usage up to 3,000 hours per year of regular play and utilization for the sporting activities provided herein; normal play and ordinary use also includes a reasonable number of users or participants, but does not include repetitive marching, repetitive training or high-intensity drills on the same part of the field, especially in the areas including, but not limited to, home plate, pitcher's mound, base areas, base paths, soccer penalty mark/spot areas, goal areas, sideline areas and lacrosse crease areas, all of which require frequent maintenance in accordance with FieldTurf Maintenance Guidelines and which may require regular replacement. This Warranty is expressly conditioned upon the Customer completing and submitting the FieldTurf Maintenance Log provided in FieldTurf's Maintenance Guidelines.

2. Damage resulting from failure to maintain the Product in accordance with FieldTurf's Maintenance Guidelines provided to the Purchaser. The Purchaser shall keep a log of all maintenance performed on the Product and supply FieldTurf with a copy upon request.

3. Damage resulting from repair, attempted repair and/or maintenance by anyone other than FieldTurf, an authorized FieldTurf distributor or an authorized FieldTurf maintainer.

SAMPLE

FieldTurf
A Tarkett Sports Company

Manufacturer's Limited Warranty

4. Damage due to causes which include, but are not limited to, the application of chemicals and/or cleaning agents, adhesive backing, dirt, traffic, negligence, vandalism, fire, flood, windstorm, animals, improper care and Acts of God.

5. Failure and/or improper design of the base; depression of the soil, subsurface or other matter upon which the base or Product rests; and any and all resulting damage to the Product arising therefrom.

6. FieldTurf does not warrant the percolation rate, long term planarity and/or compaction of the base which the product is installed. **FIELDTURF DISCLAIMS ALL WARRANTIES AS TO THE BASE, EXPRESS OR IMPLIED, AND ANY AND ALL RESULTING DAMAGE TO THE PRODUCT ARISING THEREFROM**.

7. Damage resulting from the use of improper footwear such as long-spiked track shoes, regular and repeated use of steel cleats, and flat-soled shoes. Standard molded soccer or football cleats are recommended.

8. Damage resulting from the inadequate installation, improper maintenance and/or other failure of any third party shock pad or underlayment pad installed beneath the Product, including, but not limited to, detachment of the Product caused by expansion and/or contraction of the third party shock pad or underlayment pad.

All synthetic turf is subject to normal wear and tear, which does not constitute a manufacturing defect and is not covered by this Warranty. In addition to the other factors listed in this Warranty and without limitation, the extent of the wear and tear depends on the construction of synthetic turf (fiber face weight, stitch rate, fiber pile height and gauge, infill components and maintenance of the field) and the intensity of use of the synthetic turf. The Product will be stable to light fading with the maximum fading of the Product during the Warranty period not to exceed fifteen percent (15%) of color loss annually based upon an acceptable grey scale. This Warranty does not cover slight variations or gradations of color within the Product and/or face distortion. Normal behavior of the fiber and infill with respect to the wear pattern of a field is more fully explained in the "Field Settling" document, provided in the FieldTurf After-Sales Service Package.

FieldTurf disclaims all liability for incidental and consequential damages for breach of any express or implied warranty, including any implied warranty of merchantability, with respect to the Product. In the event that the Product be used for purposes other than the sporting activities provided herein or for any other uses for which FieldTurf has provided its written authorization, FieldTurf shall not be responsible for damages resulting therefrom and, therefore, this Warranty, as well as any and all applicable legal warranties, shall become **null and void** as Purchaser understands that FieldTurf has tested the Product for use in connection with the said sporting activities and/or uses, and that it may not have tested the Product for other such uses. Any Product repairs or replacements performed under the terms of this Warranty shall not extend the term of this Warranty.

Name of Purchaser:		*Sporting Activities:*	Multi-Sport Use
Date of Completion:		*Installed by:*	FieldTurf USA, Inc.
Location:		*City:*	
Address:		*Zip:*	
State:		*Fax/email:*	
Tel:			
Signature:		*Name :*	
Date:		*Reference:*	

SAMPLE

This warranty is insured by a third party.

For more information please contact Customer Service at FieldTurf at the number listed below.
7445 Côte-de-Liesse Road Suite 200, Montreal, QC, Canada H4T 1G2 • Toll Free: 1-800-724-2969 •

Manufacturer's Limited Warranty

FieldTurf warrants that if **FieldTurf product code** (Product) for multi-sport use synthetic turf proves to be defective in material or installation workmanship, UV degradation, therefore, resulting in premature wear, during normal and ordinary use of the Product for the sporting activities provided herein or for any other uses for which FieldTurf has provided its written authorization, within **five (5) years** from the date of completion of installation as indicated in this Warranty, FieldTurf shall either repair or replace the affected area of the Product in accordance with the terms of this Warranty. FieldTurf's sole liability under this Warranty shall be limited to either repair or replacement of the affected area of the Product, at its sole discretion, and FieldTurf shall have no other obligations or liabilities with respect to defects of the Product. FieldTurf will, at FieldTurf's option, either repair or replace the affected area to the extent required to meet the Warranty period, but no cash refunds will be made**.** This Warranty shall commence upon the date of completion indicated in this Warranty. The accompanying Warranty service will not come into effect unless and until FieldTurf's Certificate of Completion is sent for validation to the corporate office of FieldTurf indicated herein within thirty (30) days of the date of completion or Purchaser's first use, whichever occurs first. In all cases, the Warranty shall be deemed to commence upon the date of completion indicated in this Warranty. The acceptance form of the terms and conditions contained in FieldTurf's Maintenance Guidelines must also be provided to FieldTurf's corporate office within thirty (30) days of completion of installation. This Warranty is limited to the remedies of repair or replacement, which shall constitute the exclusive remedies available under this Warranty; all other remedies or recourses which might otherwise be available are hereby waived by the Purchaser. FieldTurf will have no other obligations or liability for damages arising out of or in connection with the use or performance of the Product, including, but without limitation, damages for personal injury and/or economic losses. This Warranty shall not come into effect, and FieldTurf shall have no obligations under this Warranty, unless and until FieldTurf is paid in full for the Product to be warranted hereunder.

Field Markings: (sport markings to be specified)

Other Exclusions

EXCEPT AS EXPRESSLY SET FORTH IN THE MANUFACTURER'S LIMITED WARRANTY ABOVE, FIELDTURF DISCLAIMS ALL OTHER WARRANTIES OF ANY KIND, EXPRESS OR IMPLIED, IN FACT OR IN LAW, INCLUDING, BUT NOT LIMITED TO, THE IMPLIED WARRANTIES OF MERCHANTABILITY AND FITNESS FOR A PARTICULAR PURPOSE.

THIS WARRANTY SHALL BECOME NULL AND VOID IF THE PURCHASER FAILS TO MAINTAIN THE FIELD IN ACCORDANCE WITH THE FIELDTURF MAINTENANCE GUIDELINES AND SCHEDULE PROVIDED BY FIELDTURF THEREIN. ALL MAINTENANCE SHALL BE PERFORMED BY FIELDTURF-TRAINED AND/OR FIELDTURF-AUTHORIZED MAINTENANCE PERSONNEL ONLY.

Furthermore, this Manufacturer's Limited Warranty ***does not cover***:

1. Any damage resulting, directly or indirectly, from *force majeure*, accident, misuse, intentional and unintentional abuse, infill displacement, neglect; or from usage, unintentional or otherwise, that cannot reasonably be considered as normal play or ordinary use of the Product. For purposes of this Warranty, normal play and ordinary use shall mean usage up to 3,000 hours per year of regular play and utilization for the sporting activities provided herein; normal play and ordinary use also includes a reasonable number of users or participants, but does not include repetitive marching, repetitive training or high-intensity drills on the same part of the field, especially in the areas including, but not limited to, home plate, pitcher's mound, base areas, base paths, soccer penalty mark/spot areas, goal areas, sideline areas and lacrosse crease areas, all of which require frequent maintenance in accordance with FieldTurf Maintenance Guidelines and which may require regular replacement. This Warranty is expressly conditioned upon the Customer completing and submitting the FieldTurf Maintenance Log provided in FieldTurf's Maintenance Guidelines.

2. Damage resulting from failure to maintain the Product in accordance with FieldTurf's Maintenance Guidelines provided to the Purchaser. The Purchaser shall keep a log of all maintenance performed on the Product and supply FieldTurf with a copy upon request.

SAMPLE

FieldTurf
A Tarkett Sports Company

Manufacturer's Limited Warranty

3. Damage resulting from repair, attempted repair and/or maintenance by anyone other than FieldTurf, an authorized FieldTurf distributor or an authorized FieldTurf maintainer.

4. Damage due to causes which include, but are not limited to, the application of chemicals and/or cleaning agents, adhesive backing, dirt, traffic, negligence, vandalism, fire, flood, windstorm, animals, improper care and Acts of God.

5. Failure and/or improper design of the base; depression of the soil, subsurface or other matter upon which the base or Product rests; and any and all resulting damage to the Product arising therefrom.

6. FieldTurf does not warrant the percolation rate, long term planarity and/or compaction of the base which the product is installed. **FIELDTURF DISCLAIMS ALL WARRANTIES AS TO THE BASE, EXPRESS OR IMPLIED, AND ANY AND ALL RESULTING DAMAGE TO THE PRODUCT ARISING THEREFROM**.

7. Damage resulting from the use of improper footwear such as long-spiked track shoes, regular and repeated use of steel cleats, and flat-soled shoes. Standard molded soccer or football cleats are recommended.

8. Damage resulting from the inadequate installation, improper maintenance and/or other failure of any third party shock pad or underlayment pad installed beneath the Product, including, but not limited to, detachment of the Product caused by expansion and/or contraction of the third party shock pad or underlayment pad.

All synthetic turf is subject to normal wear and tear, which does not constitute a manufacturing defect and is not covered by this Warranty. In addition to the other factors listed in this Warranty and without limitation, the extent of the wear and tear depends on the construction of synthetic turf (fiber face weight, stitch rate, fiber pile height and gauge, infill components and maintenance of the field) and the intensity of use of the synthetic turf. The Product will be stable to light fading with the maximum fading of the Product during the Warranty period not to exceed fifteen percent (15%) of color loss annually based upon an acceptable grey scale. This Warranty does not cover slight variations or gradations of color within the Product and/or face distortion. Normal behavior of the fiber and infill with respect to the wear pattern of a field is more fully explained in the "Field Settling" document, provided in the FieldTurf After-Sales Service Package.

FieldTurf disclaims all liability for incidental and consequential damages for breach of any express or implied warranty, including any implied warranty of merchantability, with respect to the Product. In the event that the Product be used for purposes other than the sporting activities provided herein or for any other uses for which FieldTurf has provided its written authorization, FieldTurf shall not be responsible for damages resulting therefrom and, therefore, this Warranty, as well as any and all applicable legal warranties, shall become **null and void** as Purchaser understands that FieldTurf has tested the Product for use in connection with the said sporting activities and/or uses, and that it may not have tested the Product for other such uses. Any Product repairs or replacements performed under the terms of this Warranty shall not extend the term of this Warranty.

Name of Purchaser:		*Sporting Activities:*	Multi-Sport Use
Date of Completion:		*Installed by:*	FieldTurf USA, Inc.
Location:		*City:*	
Address:		*Zip:*	
State:		*Fax/email:*	
Tel:			
Signature:		*Name :*	
Date:		*Reference:*	

Disclaimer. The information in this document is subject to change without notice and should not be construed as a commitment by FieldTurf USA, Inc. FieldTurf assumes no responsibility for any errors that may appear in this document.

SAMPLE

This warranty is insured by a third party.

For more information please contact Customer Service at FieldTurf at the number listed below.
7445 Côte-de-Liesse Road Suite 200, Montreal, QC, Canada H4T 1G2 • Toll Free: 1-800-724-2969 •

FieldTurf
A Tarkett Sports Company

Manufacturer's Limited Warranty

FieldTurf warrants that if **FieldTurf product code** (Product) for multi-sport use synthetic turf proves to be defective in material or installation workmanship, therefore, resulting in premature wear, during normal and ordinary use of the Product for the sporting activities provided herein or for any other uses for which FieldTurf has provided its written authorization, within **eight (8) years** from the date of completion of installation as indicated in this Warranty, FieldTurf shall either repair or replace the affected area of the Product in accordance with the terms of this Warranty. FieldTurf's sole liability under this Warranty shall be limited to either repair or replacement of the affected area of the Product, at its sole discretion, and FieldTurf shall have no other obligations or liabilities with respect to defects of the Product. FieldTurf will, at FieldTurf's option, either repair or replace the affected area to the extent required to meet the Warranty period, but no cash refunds will be made**.** This Warranty shall commence upon the date of completion indicated in this Warranty. The accompanying Warranty service will not come into effect unless and until FieldTurf's Certificate of Completion is sent for validation to the corporate office of FieldTurf indicated herein within thirty (30) days of the date of completion or Purchaser's first use, whichever occurs first. In all cases, the Warranty shall be deemed to commence upon the date of completion indicated in this Warranty. The acceptance form of the terms and conditions contained in FieldTurf's Maintenance Guidelines must also be provided to FieldTurf's corporate office within thirty (30) days of completion of installation. This Warranty is limited to the remedies of repair or replacement, which shall constitute the exclusive remedies available under this Warranty; all other remedies or recourses which might otherwise be available are hereby waived by the Purchaser. FieldTurf will have no other obligations or liability for damages arising out of or in connection with the use or performance of the Product, including, but without limitation, damages for personal injury and/or economic losses. This Warranty shall not come into effect, and FieldTurf shall have no obligations under this Warranty, unless and until FieldTurf is paid in full for the Product to be warranted hereunder.

Field Markings: (sport markings to be specified)

Other Exclusions

EXCEPT AS EXPRESSLY SET FORTH IN THE MANUFACTURER'S LIMITED WARRANTY ABOVE, FIELDTURF DISCLAIMS ALL OTHER WARRANTIES OF ANY KIND, EXPRESS OR IMPLIED, IN FACT OR IN LAW, INCLUDING, BUT NOT LIMITED TO, THE IMPLIED WARRANTIES OF MERCHANTABILITY AND FITNESS FOR A PARTICULAR PURPOSE.

THIS WARRANTY SHALL BECOME NULL AND VOID IF THE PURCHASER FAILS TO MAINTAIN THE FIELD IN ACCORDANCE WITH THE FIELDTURF MAINTENANCE GUIDELINES AND SCHEDULE PROVIDED BY FIELDTURF THEREIN. ALL MAINTENANCE SHALL BE PERFORMED BY FIELDTURF-TRAINED AND/OR FIELDTURF-AUTHORIZED MAINTENANCE PERSONNEL ONLY.

Furthermore, this Manufacturer's Limited Warranty ***does not cover***:

1. Any damage resulting, directly or indirectly, from *force majeure*, accident, misuse, intentional and unintentional abuse, infill displacement, neglect; or from usage, unintentional or otherwise, that cannot reasonably be considered as normal play or ordinary use of the Product. For purposes of this Warranty, normal play and ordinary use shall mean usage up to 3,000 hours per year of regular play and utilization for the sporting activities provided herein; normal play and ordinary use also includes a reasonable number of users or participants, but does not include repetitive marching, repetitive training or high-intensity drills on the same part of the field, especially in the areas including, but not limited to, home plate, pitcher's mound, base areas, base paths, soccer penalty mark/spot areas, goal areas, sideline areas and lacrosse crease areas, all of which require frequent maintenance in accordance with FieldTurf Maintenance Guidelines and which may require regular replacement. This Warranty is expressly conditioned upon the Customer completing and submitting the FieldTurf Maintenance Log provided in FieldTurf's Maintenance Guidelines.

2. Damage resulting from failure to maintain the Product in accordance with FieldTurf's Maintenance Guidelines provided to the Purchaser. The Purchaser shall keep a log of all maintenance performed on the Product and supply FieldTurf with a copy upon request.

SAMPLE

Manufacturer's Limited Warranty

3. Damage resulting from repair, attempted repair and/or maintenance by anyone other than FieldTurf, an authorized FieldTurf distributor or an authorized FieldTurf maintainer.

4. Damage due to causes which include, but are not limited to, the application of chemicals and/or cleaning agents, adhesive backing, dirt, traffic, negligence, vandalism, fire, flood, windstorm, animals, improper care and Acts of God.

5. Failure and/or improper design of the base; depression of the soil, subsurface or other matter upon which the base or Product rests; and any and all resulting damage to the Product arising therefrom.

6. FieldTurf does not warrant the percolation rate, long term planarity and/or compaction of the base which the product is installed. **FIELDTURF DISCLAIMS ALL WARRANTIES AS TO THE BASE, EXPRESS OR IMPLIED, AND ANY AND ALL RESULTING DAMAGE TO THE PRODUCT ARISING THEREFROM**.

7. Damage resulting from the use of improper footwear such as long-spiked track shoes, regular and repeated use of steel cleats, and flat-soled shoes. Standard molded soccer or football cleats are recommended.

8. Damage resulting from the inadequate installation, improper maintenance and/or other failure of any third party shock pad or underlayment pad installed beneath the Product, including, but not limited to, detachment of the Product caused by expansion and/or contraction of the third party shock pad or underlayment pad.

All synthetic turf is subject to normal wear and tear, which does not constitute a manufacturing defect and is not covered by this Warranty. In addition to the other factors listed in this Warranty and without limitation, the extent of the wear and tear depends on the construction of synthetic turf (fiber face weight, stitch rate, fiber pile height and gauge, infill components and maintenance of the field) and the intensity of use of the synthetic turf. The Product will be stable to light fading with the maximum fading of the Product during the Warranty period not to exceed fifteen percent (15%) of color loss annually based upon an acceptable grey scale. This Warranty does not cover slight variations or gradations of color within the Product and/or face distortion. Normal behavior of the fiber and infill with respect to the wear pattern of a field is more fully explained in the "Field Settling" document, provided in the FieldTurf After-Sales Service Package.

FieldTurf disclaims all liability for incidental and consequential damages for breach of any express or implied warranty, including any implied warranty of merchantability, with respect to the Product. In the event that the Product be used for purposes other than the sporting activities provided herein or for any other uses for which FieldTurf has provided its written authorization, FieldTurf shall not be responsible for damages resulting therefrom and, therefore, this Warranty, as well as any and all applicable legal warranties, shall become **null and void** as Purchaser understands that FieldTurf has tested the Product for use in connection with the said sporting activities and/or uses, and that it may not have tested the Product for other such uses. Any Product repairs or replacements performed under the terms of this Warranty shall not extend the term of this Warranty.

Name of Purchaser:		*Sporting Activities:*	Multi-Sport Use
Date of Completion:		*Installed by:*	FieldTurf USA, Inc.
Location:		*City:*	
Address:		*Zip:*	
State:		*Fax/email:*	
Tel:			
Signature:		*Name :*	
Date:		*Reference:*	

Disclaimer. The information in this document is subject to change without notice and should not be construed as a commitment by FieldTurf USA, Inc. FieldTurf assumes no responsibility for any errors that may appear in this document.

SAMPLE

This warranty is insured by a third party.

For more information please contact Customer Service at FieldTurf at the number listed below.

7445 Côte-de-Liesse Road Suite 200, Montreal, QC, Canada H4T 1G2 • Toll Free: 1-800-724-2969 •

FieldTurf
A Tarkett Sports Company

Manufacturer's Limited Warranty

FieldTurf warrants that if **FieldTurf (poduct code)** (Product) for multi-sport use synthetic turf proves to be defective in material, installation workmanship, therefore resulting in premature wear, during normal and ordinary use of the Product for the sporting activities provided herein or for any other uses for which FieldTurf has provided its written authorization, within **ten (10) years** from the date of completion of installation as indicated in this Warranty (the first eight (8) years to be insured and the final two (2) years to be a manufacturer's warranty), FieldTurf shall either repair or replace the affected area of the Product in accordance with the terms of this Warranty. FieldTurf's sole liability under this Warranty shall be limited to either repair or replacement of the affected area of the Product, at its sole discretion, and FieldTurf shall have no other obligations or liabilities with respect to defects of the Product. FieldTurf will, at FieldTurf's option, either repair or replace the affected area to the extent required to meet the Warranty period, but no cash refunds will be made. This Warranty shall commence upon the date of completion indicated in this Warranty. The accompanying Warranty service will not come into effect unless and until FieldTurf's Certificate of Completion is sent for validation to the corporate office of FieldTurf indicated herein within thirty (30) days of the date of completion or Purchaser's first use, whichever occurs first. In all cases, the Warranty shall be deemed to commence upon the date of completion indicated in this Warranty. The acceptance form of the terms and conditions contained in FieldTurf's Maintenance Guidelines must also be provided to FieldTurf's corporate office within thirty (30) days of completion of installation. This Warranty is limited to the remedies of repair or replacement, which shall constitute the exclusive remedies available under this Warranty; all other remedies or recourses which might otherwise be available are hereby waived by the Purchaser. FieldTurf will have no other obligations or liability for damages arising out of or in connection with the use or performance of the Product, including, but without limitation, damages for personal injury and/or economic losses. This Warranty shall not come into effect, and FieldTurf shall have no obligations under this Warranty, unless and until FieldTurf is paid in full for the Product to be warranted hereunder.

Field Markings: (sports markings to be specified)

Other Exclusions

EXCEPT AS EXPRESSLY SET FORTH IN THE MANUFACTURER'S LIMITED WARRANTY ABOVE, FIELDTURF DISCLAIMS ALL OTHER WARRANTIES OF ANY KIND, EXPRESS OR IMPLIED, IN FACT OR IN LAW, INCLUDING, BUT NOT LIMITED TO, THE IMPLIED WARRANTIES OF MERCHANTABILITY AND FITNESS FOR A PARTICULAR PURPOSE.

THIS WARRANTY SHALL BECOME NULL AND VOID IF THE PURCHASER FAILS TO MAINTAIN THE FIELD IN ACCORDANCE WITH THE FIELDTURF MAINTENANCE GUIDELINES AND SCHEDULE PROVIDED BY FIELDTURF THEREIN. ALL MAINTENANCE SHALL BE PERFORMED BY FIELDTURF-TRAINED AND/OR FIELDTURF-AUTHORIZED MAINTENANCE PERSONNEL ONLY.

Furthermore, this Manufacturer's Limited Warranty ***does not cover***:

1. Any damage resulting, directly or indirectly, from *force majeure*, accident, misuse, intentional and unintentional abuse, infill displacement, neglect; or from usage, unintentional or otherwise, that cannot reasonably be considered as normal play or ordinary use of the Product. For purposes of this Warranty, normal play and ordinary use shall mean usage up to 3,000 hours per year of regular play and utilization for the sporting activities provided herein; normal play and ordinary use also includes a reasonable number of users or participants, but does not include repetitive marching, repetitive training or high-intensity drills on the same part of the field, especially in the areas including, but not limited to, home plate, pitcher's mound, base areas, base paths, soccer penalty mark/spot areas, goal areas, sideline areas and lacrosse crease areas, all of which require frequent maintenance in accordance with FieldTurf Maintenance Guidelines and which may require regular replacement. This Warranty is expressly conditioned upon the Customer completing and submitting the FieldTurf Maintenance Log provided in FieldTurf's Maintenance Guidelines.

SAMPLE

FieldTurf
A Tarkett Sports Company

Manufacturer's Limited Warranty

2. Damage resulting from failure to maintain the Product in accordance with FieldTurf's Maintenance Guidelines provided to the Purchaser. The Purchaser shall keep a log of all maintenance performed on the Product and supply FieldTurf with a copy upon request.

3. Damage resulting from repair, attempted repair and/or maintenance by anyone other than FieldTurf, an authorized FieldTurf distributor or an authorized FieldTurf maintainer.

4. Damage due to causes which include, but are not limited to, the application of chemicals and/or cleaning agents, adhesive backing, dirt, traffic, negligence, vandalism, fire, flood, windstorm, animals, improper care and Acts of God.

5. Failure and/or improper design of the base; depression of the soil, subsurface or other matter upon which the base or Product rests; and any and all resulting damage to the Product arising therefrom.

6. FieldTurf does not warrant the percolation rate, long term planarity and/or compaction of the base which the product is installed. **FIELDTURF DISCLAIMS ALL WARRANTIES AS TO THE BASE, EXPRESS OR IMPLIED, AND ANY AND ALL RESULTING DAMAGE TO THE PRODUCT ARISING THEREFROM**.

7. Damage resulting from the use of improper footwear such as long-spiked track shoes, regular and repeated use of steel cleats, and flat-soled shoes. Standard molded soccer or football cleats are recommended.

8. Damage resulting from the inadequate installation, improper maintenance and/or other failure of any third party shock pad or underlayment pad installed beneath the Product, including, but not limited to, detachment of the Product caused by expansion and/or contraction of the third party shock pad or underlayment pad.

All synthetic turf is subject to normal wear and tear, which does not constitute a manufacturing defect and is not covered by this Warranty. In addition to the other factors listed in this Warranty and without limitation, the extent of the wear and tear depends on the construction of synthetic turf (fiber face weight, stitch rate, fiber pile height and gauge, infill components and maintenance of the field) and the intensity of use of the synthetic turf. The Product will be stable to light fading with the maximum fading of the Product during the Warranty period not to exceed fifteen percent (15%) of color loss annually based upon an acceptable grey scale. This Warranty does not cover slight variations or gradations of color within the Product and/or face distortion. Normal behavior of the fiber and infill with respect to the wear pattern of a field is more fully explained in the "Field Settling" document, provided in the FieldTurf After-Sales Service Package.

FieldTurf disclaims all liability for incidental and consequential damages for breach of any express or implied warranty, including any implied warranty of merchantability, with respect to the Product. In the event that the Product be used for purposes other than the sporting activities provided herein or for any other uses for which FieldTurf has provided its written authorization, FieldTurf shall not be responsible for damages resulting therefrom and, therefore, this Warranty, as well as any and all applicable legal warranties, shall become **null and void** as Purchaser understands that FieldTurf has tested the Product for use in connection with the said sporting activities and/or uses, and that it may not have tested the Product for other such uses. Any Product repairs or replacements performed under the terms of this Warranty shall not extend the term of this Warranty.

Name of Purchaser:		*Sporting Activities:*	Multi-Sport Use
Date of Completion:		*Installed by:*	FieldTurf USA, Inc.
Location:		*City:*	
Address:		*Zip:*	
State:		*Fax/email:*	
Tel:			
Signature:		*Name :*	
Date:		*Reference:*	

Disclaimer. The information in this document is subject to change without notice and should not be construed as a commitment by FieldTurf USA, Inc. FieldTurf assumes no responsibility for any errors that may appear in this document.

SAMPLE

This warranty is insured by a third party.

For more information please contact Customer Service at FieldTurf at the number listed below.
7445 Côte-de-Liesse Road Suite 200, Montreal, QC, Canada H4T 1G2 • Toll Free: 1-800-724-2969 •

FieldTurf
A Tarkett Sports Company

Manufacturer's Limited Warranty

FieldTurf warrants that if **FieldTurf product code** (Product) for multi-sport use synthetic turf proves to be defective in material, installation workmanship, UV degradation, resulting in premature wear, during normal and ordinary use of the Product for the sporting activities provided herein or for any other uses for which FieldTurf has provided its written authorization, within **twelve (12) years** from the date of completion of installation as indicated in this Warranty (the first eight (8) years to be insured and the final four (4) years to be a manufacturer's warranty), FieldTurf shall either repair or replace the affected area of the Product in accordance with the terms of this Warranty. FieldTurf's sole liability under this Warranty shall be limited to either repair or replacement of the affected area of the Product, at its sole discretion, and FieldTurf shall have no other obligations or liabilities with respect to defects of the Product. FieldTurf will, at FieldTurf's option, either repair or replace the affected area to the extent required to meet the Warranty period, but no cash refunds will be made**.** This Warranty shall commence upon the date of completion indicated in this Warranty. The accompanying Warranty service will not come into effect unless and until FieldTurf's Certificate of Completion is sent for validation to the corporate office of FieldTurf indicated herein within thirty (30) days of the date of completion or Purchaser's first use, whichever occurs first. In all cases, the Warranty shall be deemed to commence upon the date of completion indicated in this Warranty. The acceptance form of the terms and conditions contained in FieldTurf's Maintenance Guidelines must also be provided to FieldTurf's corporate office within thirty (30) days of completion of installation. This Warranty is limited to the remedies of repair or replacement, which shall constitute the exclusive remedies available under this Warranty; all other remedies or recourses which might otherwise be available are hereby waived by the Purchaser. FieldTurf will have no other obligations or liability for damages arising out of or in connection with the use or performance of the Product, including, but without limitation, damages for personal injury and/or economic losses. This Warranty shall not come into effect, and FieldTurf shall have no obligations under this Warranty, unless and until FieldTurf is paid in full for the Product to be warranted hereunder.

Field Markings: (sports markings to be specified)

Other Exclusions

EXCEPT AS EXPRESSLY SET FORTH IN THE MANUFACTURER'S LIMITED WARRANTY ABOVE, FIELDTURF DISCLAIMS ALL OTHER WARRANTIES OF ANY KIND, EXPRESS OR IMPLIED, IN FACT OR IN LAW, INCLUDING, BUT NOT LIMITED TO, THE IMPLIED WARRANTIES OF MERCHANTABILITY AND FITNESS FOR A PARTICULAR PURPOSE.

THIS WARRANTY SHALL BECOME NULL AND VOID IF THE PURCHASER FAILS TO MAINTAIN THE FIELD IN ACCORDANCE WITH THE FIELDTURF MAINTENANCE GUIDELINES AND SCHEDULE PROVIDED BY FIELDTURF THEREIN. ALL MAINTENANCE SHALL BE PERFORMED BY FIELDTURF-TRAINED AND/OR FIELDTURF-AUTHORIZED MAINTENANCE PERSONNEL ONLY.

Furthermore, this Manufacturer's Limited Warranty ***does not cover***:

1. Any damage resulting, directly or indirectly, from *force majeure*, accident, misuse, intentional and unintentional abuse, infill displacement, neglect; or from usage, unintentional or otherwise, that cannot reasonably be considered as normal play or ordinary use of the Product. For purposes of this Warranty, normal play and ordinary use shall mean usage up to 3,000 hours per year of regular play and utilization for the sporting activities provided herein; normal play and ordinary use also includes a reasonable number of users or participants, but does not include repetitive marching, repetitive training or high-intensity drills on the same part of the field, especially in the areas including, but not limited to, home plate, pitcher's mound, base areas, base paths, soccer penalty mark/spot areas, goal areas, sideline areas and lacrosse crease areas, all of which require frequent maintenance in accordance with FieldTurf Maintenance Guidelines and which may require regular replacement. This Warranty is expressly conditioned upon the Customer completing and submitting the FieldTurf Maintenance Log provided in FieldTurf's Maintenance Guidelines.

2. Damage resulting from failure to maintain the Product in accordance with FieldTurf's Maintenance Guidelines provided to the Purchaser. The Purchaser shall keep a log of all maintenance performed on the Product and supply FieldTurf with a copy upon request.

SAMPLE

Manufacturer's Limited Warranty

3. Damage resulting from repair, attempted repair and/or maintenance by anyone other than FieldTurf, an authorized FieldTurf distributor or an authorized FieldTurf maintainer.

4. Damage due to causes which include, but are not limited to, the application of chemicals and/or cleaning agents, adhesive backing, dirt, traffic, negligence, vandalism, fire, flood, windstorm, animals, improper care and Acts of God.

5. Failure and/or improper design of the base; depression of the soil, subsurface or other matter upon which the base or Product rests; and any and all resulting damage to the Product arising therefrom.

6. FieldTurf does not warrant the percolation rate, long term planarity and/or compaction of the base which the product is installed. **FIELDTURF DISCLAIMS ALL WARRANTIES AS TO THE BASE, EXPRESS OR IMPLIED, AND ANY AND ALL RESULTING DAMAGE TO THE PRODUCT ARISING THEREFROM**.

7. Damage resulting from the use of improper footwear such as long-spiked track shoes, regular and repeated use of steel cleats, and flat-soled shoes. Standard molded soccer or football cleats are recommended.

8. Damage resulting from the inadequate installation, improper maintenance and/or other failure of any third party shock pad or underlayment pad installed beneath the Product, including, but not limited to, detachment of the Product caused by expansion and/or contraction of the third party shock pad or underlayment pad.

All synthetic turf is subject to normal wear and tear, which does not constitute a manufacturing defect and is not covered by this Warranty. In addition to the other factors listed in this Warranty and without limitation, the extent of the wear and tear depends on the construction of synthetic turf (fiber face weight, stitch rate, fiber pile height and gauge, infill components and maintenance of the field) and the intensity of use of the synthetic turf. The Product will be stable to light fading with the maximum fading of the Product during the Warranty period not to exceed fifteen percent (15%) of color loss annually based upon an acceptable grey scale. This Warranty does not cover slight variations or gradations of color within the Product and/or face distortion. Normal behavior of the fiber and infill with respect to the wear pattern of a field is more fully explained in the "Field Settling" document, provided in the FieldTurf After-Sales Service Package.

FieldTurf disclaims all liability for incidental and consequential damages for breach of any express or implied warranty, including any implied warranty of merchantability, with respect to the Product. In the event that the Product be used for purposes other than the sporting activities provided herein or for any other uses for which FieldTurf has provided its written authorization, FieldTurf shall not be responsible for damages resulting therefrom and, therefore, this Warranty, as well as any and all applicable legal warranties, shall become **null and void** as Purchaser understands that FieldTurf has tested the Product for use in connection with the said sporting activities and/or uses, and that it may not have tested the Product for other such uses. Any Product repairs or replacements performed under the terms of this Warranty shall not extend the term of this Warranty.

Name of Purchaser:		*Sporting Activities:*	Multi-Sport Use
Date of Completion:		*Installed by:*	FieldTurf USA, Inc.
Location:		*City:*	
Address:		*Zip:*	
State:		*Fax/email:*	
Tel:			
Signature:		*Name :*	
Date:		*Reference:*	

Disclaimer. The information in this document is subject to change without notice and should not be construed as a commitment by FieldTurf USA, Inc. FieldTurf assumes no responsibility for any errors that may appear in this document.

SAMPLE

This warranty is insured by a third party for the first eight (8) years.

For more information please contact Customer Service at FieldTurf at the number listed below.
7445 Côte-de-Liesse Road Suite 200, Montreal, QC, Canada H4T 1G2 • Toll Free: 1-800-724-2969 •

FieldTurf
A Tarkett Sports Company

Manufacturer's Limited Warranty

FieldTurf warrants that if **FieldTurf product code *PureCob*** (Product) for multi-sport use synthetic turf proves to be defective in material or installation workmanship, therefore, resulting in premature wear, during normal and ordinary use of the Product for the sporting activities provided herein or for any other uses for which FieldTurf has provided its written authorization, within **eight (8) years** from the date of completion of installation as indicated in this Warranty, FieldTurf shall either repair or replace the affected area of the Product in accordance with the terms of this Warranty. FieldTurf's sole liability under this Warranty shall be limited to either repair or replacement of the affected area of the Product, at its sole discretion, and FieldTurf shall have no other obligations or liabilities with respect to defects of the Product. FieldTurf will, at FieldTurf's option, either repair or replace the affected area to the extent required to meet the Warranty period, but no cash refunds will be made**.** FieldTurf warrants that all materials installed meet or exceed the product specifications and further warrants that replacement material will be available through the Warranty period. FieldTurf will verify that their representative has inspected the installation and that the work conforms to FieldTurf's requirements and further warrants that the installation was done in accordance with both FieldTurf's recommendations and any written directives of FieldTurf's representative. This Warranty shall commence upon the date of completion indicated in this Warranty. The accompanying Warranty service will not come into effect unless and until FieldTurf's Certificate of Completion is sent for validation to the corporate office of FieldTurf indicated herein within thirty (30) days of the date of completion or Purchaser's first use, whichever occurs first. In all cases, the Warranty shall be deemed to commence upon the date of completion indicated in this Warranty. The acceptance form of the terms and conditions contained in FieldTurf's Maintenance Guidelines must also be provided to FieldTurf's corporate office within thirty (30) days of completion of installation. FieldTurf warrants that the G-max shall maintain a value (option 1: below one hundred thirty-five (135) at installation and no greater than one hundred eight-five (185)) or option 2: (that shall not exceed two hundred (200)) for the duration of the warranty, as per ASTM 1936 and F-355 standards, providing that the customer has performed the regular maintenance as outlined in the maintenance guidelines. This Warranty is limited to the remedies of repair or replacement, which shall constitute the exclusive remedies available under this Warranty; all other remedies or recourses which might otherwise be available are hereby waived by the Purchaser. FieldTurf will have no other obligations or liability for damages arising out of or in connection with the use or performance of the Product, including, but without limitation, damages for personal injury and/or economic losses. This Warranty shall not come into effect, and FieldTurf shall have no obligations under this Warranty, unless and until FieldTurf is paid in full for the Product to be warranted hereunder. **As concerns the designated high-traffic areas, which include, but are not limited to, the home plate, pitcher's mound, pitcher's lane, catcher's box, batting cage and bullpen areas, the foregoing Warranty does not apply. Notwithstanding anything contained herein, the base areas and slide zones, which also constitute as high traffic areas, shall be covered by this Warranty, except that the applicable Warranty period shall be limited to a two (2) year Manufacturer's Warranty (see Appendices 2 and 3).**

Field Markings: Baseball, Softball

Other Exclusions

EXCEPT AS EXPRESSLY SET FORTH IN THE MANUFACTURER'S LIMITED WARRANTY ABOVE, FIELDTURF DISCLAIMS ALL OTHER WARRANTIES OF ANY KIND, EXPRESS OR IMPLIED, IN FACT OR IN LAW, INCLUDING, BUT NOT LIMITED TO, THE IMPLIED WARRANTIES OF MERCHANTABILITY AND FITNESS FOR A PARTICULAR PURPOSE.

THIS WARRANTY SHALL BECOME NULL AND VOID IF THE PURCHASER FAILS TO MAINTAIN THE FIELD IN ACCORDANCE WITH THE FIELDTURF MAINTENANCE GUIDELINES AND SCHEDULE PROVIDED BY FIELDTURF THEREIN. ALL MAINTENANCE SHALL BE PERFORMED BY FIELDTURF-TRAINED AND/OR FIELDTURF-AUTHORIZED MAINTENANCE PERSONNEL ONLY.

Furthermore, this Manufacturer's Limited Warranty ***does not cover**:*

1. Any damage resulting, directly or indirectly, from force majeure, accident, misuse, intentional and unintentional abuse, infill displacement, neglect; or from usage, unintentional or otherwise, that cannot reasonably be considered as normal play or ordinary use of the Product. For purposes of this Warranty, normal play and ordinary use shall mean usage up to 3,000 hours per year of regular play and utilization for the sporting activities provided herein; normal play and ordinary use also includes a reasonable number of users or participants, but does not include repetitive marching, repetitive training or high-intensity drills on the same part of the field, especially in the areas of, but not limited to, home plate, pitcher's mound, base areas, base paths all of which require frequent maintenance in accordance with FieldTurf Maintenance Guidelines and may require regular replacement.

2. Damage resulting from failure to maintain the Product in accordance with FieldTurf's Maintenance Guidelines provided to the Purchaser. The Purchaser shall keep a log of all maintenance performed on the Product and supply FieldTurf with a copy upon request. Purchaser acknowledges that organic infill systems such as those in the *PureCob* product require specialized maintenance and care and given the nature of FieldTurf's *PureCob* product, this Warranty shall be conditioned upon the Purchaser carrying out regular *PureCob*-specific field

SAMPLE

FieldTurf
A Tarkett Sports Company

Manufacturer's Limited Warranty

maintenance as specified in FieldTurf's applicable maintenance manuals/guidelines and upon maintaining written logs showing same. Purchaser understands the particular *PureCob* requirements for maintaining proper infill levels and agrees, as necessary, to undertake responsibility for infill replenishment and maintenance anywhere infill is naturally displaced. The Purchaser also acknowledges that the characteristics of the *PureCob* materials may result in naturally occurring changes, including but not limited to, color and appearance of the materials within the infill layers; accordingly and without limitation, *PureCob* is subject to a change in color which usually presents as a darker surface color, but which will not affect the performance of the field

3. Damage resulting from repair, attempted repair and/or maintenance by anyone other than FieldTurf, an authorized FieldTurf distributor or an authorized FieldTurf maintainer.
4. Damage due to causes which include, but are not limited to, the application of chemicals and/or cleaning agents, adhesive backing, dirt, traffic, negligence, vandalism, fire, flood, windstorm, animals, improper care and Acts of God.
5. Failure and/or improper design of the base; depression of the soil, subsurface or other matter upon which the base or Product rests; and any and all resulting damage to the Product arising therefrom.
6. FieldTurf does not warrant the percolation rate, long term planarity and/or compaction of the base which the product is installed. **FIELDTURF DISCLAIMS ALL WARRANTIES AS TO THE BASE, EXPRESS OR IMPLIED, AND ANY AND ALL RESULTING DAMAGE TO THE PRODUCT ARISING THEREFROM**.
7. Damage resulting from the use of improper footwear such as long-spiked track shoes, regular and repeated use of steel cleats, and flat-soled shoes. Standard molded soccer or football cleats are recommended.
8. Damage resulting from the inadequate installation, improper maintenance and/or other failure of any third-party shock pad or underlayment pad installed beneath the Product, including, but not limited to, detachment of the Product caused by expansion and/or contraction of the third-party shock pad or underlayment pad.

All synthetic turf is subject to normal wear and tear, which does not constitute a manufacturing defect and is not covered by this Warranty. In addition to the other factors listed in this Warranty and without limitation, the extent of the wear and tear depends on the construction of synthetic turf (fiber face weight, stitch rate, fiber pile height and gauge, infill components and maintenance of the field) and the intensity of use of the synthetic turf. The synthetic turf will be stable to light fading with the maximum fading of the synthetic turf during the Warranty period not to exceed fifteen percent (15%) of color loss annually based upon an acceptable grey scale. This Warranty does not cover slight variations or gradations of color within the Product and/or face distortion. Normal behavior of the fiber and infill with respect to the wear pattern of a field is more fully explained in the "Field Settling" document, provided in the FieldTurf After-Sales Service Package and the PureCob "*What to Look Out For*" Handout attached herein as **Appendix 1**.

FieldTurf disclaims all liability for incidental and consequential damages for breach of any express or implied warranty, including any implied warranty of merchantability, with respect to the Product. In the event that the Product be used for purposes other than the sporting activities provided herein or for any other uses for which FieldTurf has provided its written authorization, FieldTurf shall not be responsible for damages resulting therefrom and, therefore, this Warranty, as well as any and all applicable legal warranties, shall become **null and void** as Purchaser understands that FieldTurf has tested the Product for use in connection with the said sporting activities and/or uses, and that it may not have tested the Product for other such uses. Any Product repairs or replacements performed under the terms of this Warranty shall not extend the term of this Warranty.

Name of Purchaser:	**CLIENT NAME**	*Sporting Activities:*	Multi-Sport Use
Date of Completion:		*Installed by:*	FieldTurf USA, Inc.
Location:		*City:*	
Address:		*Zip:*	
State:		*Fax/email:*	
Tel:			
Signature:		*Name :*	Darren Gill
Date:		*Reference:*	8800

SAMPLE

This warranty is insured by a third party.
For more information please contact Customer Service at FieldTurf at the number listed below.
7445 Côte-de-Liesse Road Suite 200, Montreal, QC, Canada H4T 1G2 • Toll Free: 1-800-724-2969 •

FieldTurf
A Tarkett Sports Company

Manufacturer's Limited Warranty

Appendix 1

FieldTurf®
A Tarkett Sports Company

SUSTAIN THE GAME

PureCob

WHAT TO LOOK OUT FOR

OUR SYSTEMS WITH PURECOB INFILL REQUIRE THE CARE AND MAINTENANCE YOU WOULD EXPECT TO GIVE TO A SYNTHETIC TURF FIELD, BUT THERE ARE SOME SPECIFICS THAT YOU SHOULD B E AWARE OF:

THE FIRST MONTHS AFTER INSTALLATION

It will normally take several months for the infill to fully settle between the grass filaments and some 'static cling' of the natural infill to the synthetic turf fiber is normal. Regular maintenance should start immediately after the handover of the field. For our PureCob infill, it is important to note that during its production process the corncobs will be compressed, and thereafter, the grain will swell by approximately 30% after water is applied. This implies that it may initially look like too little corn cob infill has been applied, however after the field has received a watering by (natural) rainfall, or by wetting the field, the corn cob particles will regain their original volume.

REQUIRED MAINTENANCE

PureCob typically requires additional attention and maintenance. Due to its specific weight, some of the infill material is more mobile, especially during extreme weather. Care should be taken to top up and brush as required. It is possible that the infill may displace during heavy rainfall, however it can be easily redistributed once the playing area has dried out. If infill becomes visible on the playing surface, sprinkling with water, or allowing the rain to fall, will settle the infill back into the system. PureCob retains more water than rubber based infills. As a result, depending on the climate, the high moisture content could lend itself to being vulnerable to freezing due to ambient temperature changes. The maintenance activities of Brushing, Aerating, Raking, and Sweeping should be adhered to.

AESTHETICS

PureCob is a natural material with a natural aesthetic and, over time, the look and shape of the infill granules will alter slightly. Typically, the granules will go darker in colour. This is completely normal and does not affect their performance or durability in any way.

NATURAL INFILLS CAN COOL

PureCob acts as a cooling agent within a synthetic turf system – also adding an additional level of comfort during hot periods.

SAMPLE

fieldturf.com

This warranty is insured by a third party.

For more information please contact Customer Service at FieldTurf at the number listed below.

7445 Côte-de-Liesse Road Suite 200, Montreal, QC, Canada H4T 1G2 • Toll Free: 1-800-724-2969 •

FieldTurf
A Tarkett Sports Company

Manufacturer's Limited Warranty

Appendix 2

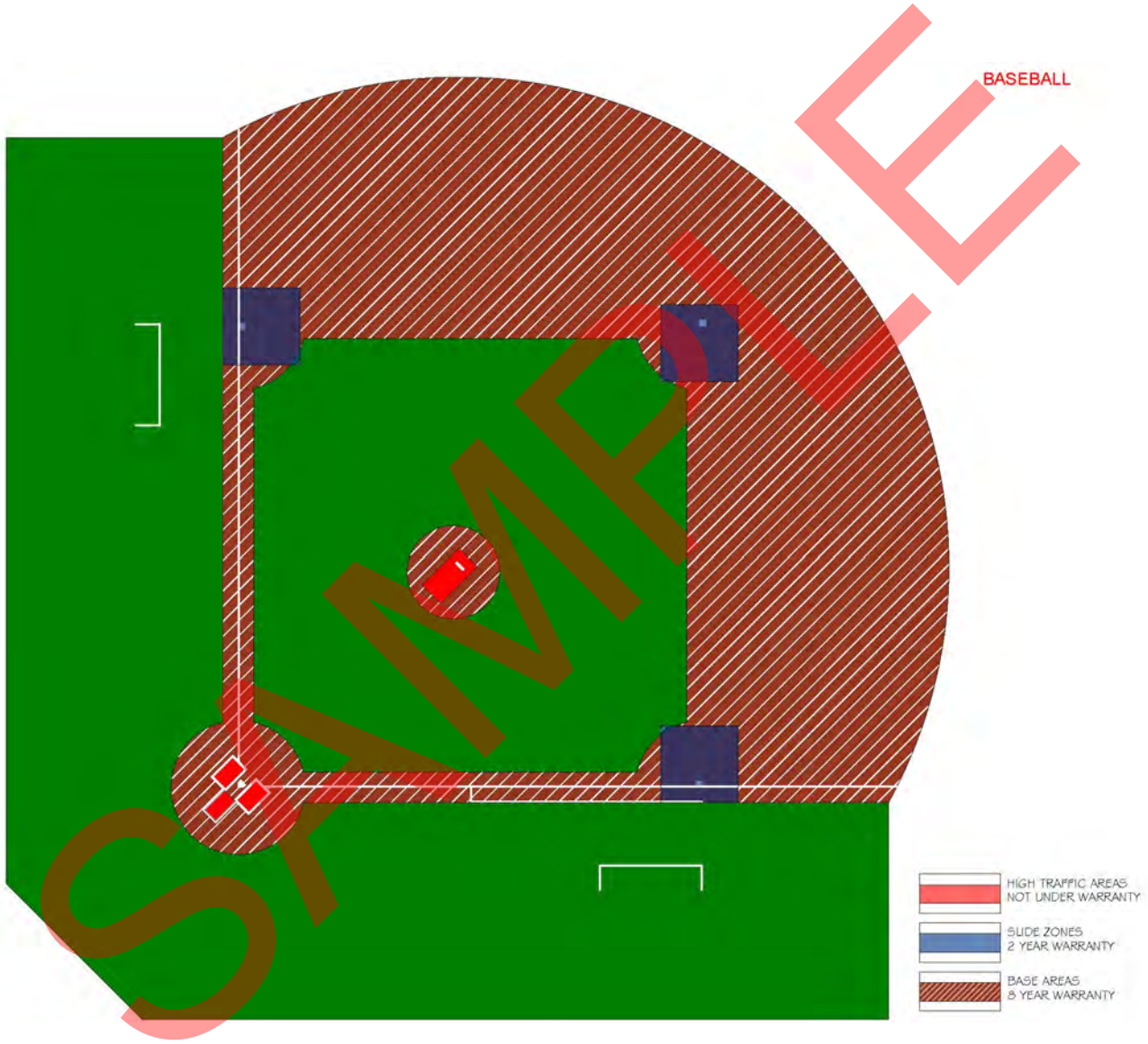

SAMPLE

This warranty is insured by a third party.

For more information please contact Customer Service at FieldTurf at the number listed below.

7445 Côte-de-Liesse Road Suite 200, Montreal, QC, Canada H4T 1G2 • Toll Free: 1-800-724-2969 •

FieldTurf
A Tarkett Sports Company

Manufacturer's Limited Warranty

Appendix 3

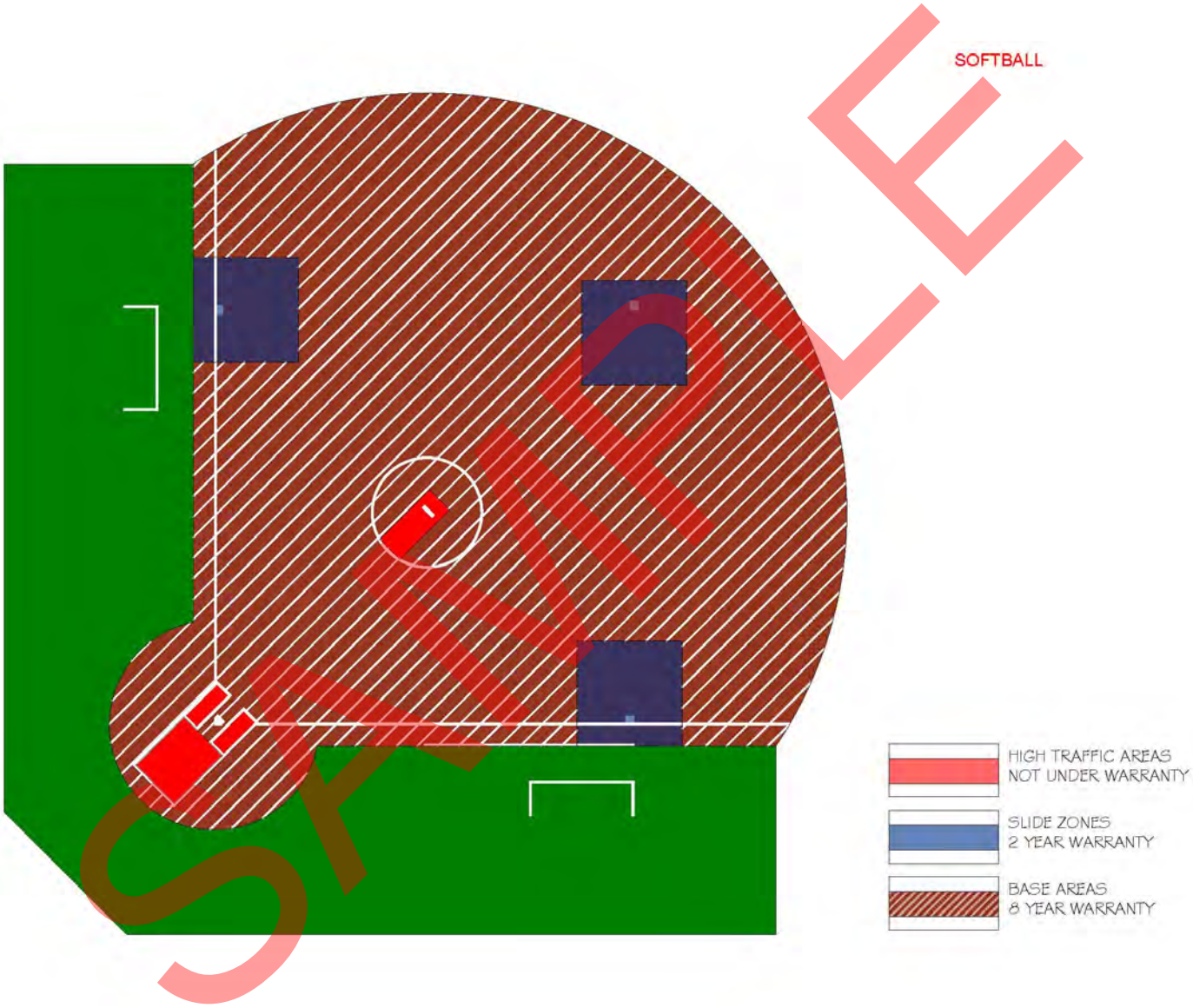

SAMPLE

This warranty is insured by a third party.
For more information please contact Customer Service at FieldTurf at the number listed below.
7445 Côte-de-Liesse Road Suite 200, Montreal, QC, Canada H4T 1G2 • Toll Free: 1-800-724-2969 •

FieldTurf
A Tarkett Sports Company

Manufacturer's Limited Warranty

FieldTurf warrants that if **FieldTurf product code *PureCob*** (Product) for multi-sport use synthetic turf proves to be defective in material or installation workmanship, therefore, resulting in premature wear, during normal and ordinary use of the Product for the sporting activities provided herein or for any other uses for which FieldTurf has provided its written authorization, within **eight (8) years** from the date of completion of installation as indicated in this Warranty, FieldTurf shall either repair or replace the affected area of the Product in accordance with the terms of this Warranty. FieldTurf's sole liability under this Warranty shall be limited to either repair or replacement of the affected area of the Product, at its sole discretion, and FieldTurf shall have no other obligations or liabilities with respect to defects of the Product. FieldTurf will, at FieldTurf's option, either repair or replace the affected area to the extent required to meet the Warranty period, but no cash refunds will be made**.** This Warranty shall commence upon the date of completion indicated in this Warranty. The accompanying Warranty service will not come into effect unless and until FieldTurf's Certificate of Completion is sent for validation to the corporate office of FieldTurf indicated herein within thirty (30) days of the date of completion or Purchaser's first use, whichever occurs first. In all cases, the Warranty shall be deemed to commence upon the date of completion indicated in this Warranty. The acceptance form of the terms and conditions contained in FieldTurf's Maintenance Guidelines must also be provided to FieldTurf's corporate office within thirty (30) days of completion of installation. This Warranty is limited to the remedies of repair or replacement, which shall constitute the exclusive remedies available under this Warranty; all other remedies or recourses which might otherwise be available are hereby waived by the Purchaser. FieldTurf will have no other obligations or liability for damages arising out of or in connection with the use or performance of the Product, including, but without limitation, damages for personal injury and/or economic losses. This Warranty shall not come into effect, and FieldTurf shall have no obligations under this Warranty, unless and until FieldTurf is paid in full for the Product to be warranted hereunder. **As concerns the designated high-traffic areas, which include, but are not limited to, the home plate, pitcher's mound, pitcher's lane, catcher's box, batting cage and bullpen areas, the foregoing Warranty does not apply. Notwithstanding anything contained herein, the base areas and slide zones, which also constitute as high traffic areas, shall be covered by this Warranty, except that the applicable Warranty period shall be limited to a two (2) year Manufacturer's Warranty (see Appendices 2 and 3).**

Field Markings: Baseball, Softball

Other Exclusions

EXCEPT AS EXPRESSLY SET FORTH IN THE MANUFACTURER'S LIMITED WARRANTY ABOVE, FIELDTURF DISCLAIMS ALL OTHER WARRANTIES OF ANY KIND, EXPRESS OR IMPLIED, IN FACT OR IN LAW, INCLUDING, BUT NOT LIMITED TO, THE IMPLIED WARRANTIES OF MERCHANTABILITY AND FITNESS FOR A PARTICULAR PURPOSE.

THIS WARRANTY SHALL BECOME NULL AND VOID IF THE PURCHASER FAILS TO MAINTAIN THE FIELD IN ACCORDANCE WITH THE FIELDTURF MAINTENANCE GUIDELINES AND SCHEDULE PROVIDED BY FIELDTURF THEREIN. ALL MAINTENANCE SHALL BE PERFORMED BY FIELDTURF-TRAINED AND/OR FIELDTURF-AUTHORIZED MAINTENANCE PERSONNEL ONLY.

Furthermore, this Manufacturer's Limited Warranty ***does not cover****:*

1. Any damage resulting, directly or indirectly, from force majeure, accident, misuse, intentional and unintentional abuse, infill displacement, neglect; or from usage, unintentional or otherwise, that cannot reasonably be considered as normal play or ordinary use of the Product. For purposes of this Warranty, normal play and ordinary use shall mean usage up to 3,000 hours per year of regular play and utilization for the sporting activities provided herein; normal play and ordinary use also includes a reasonable number of users or participants, but does not include repetitive marching, repetitive training or high-intensity drills on the same part of the field, especially in the areas of, but not limited to, home plate, pitcher's mound, base areas, base paths all of which require frequent maintenance in accordance with FieldTurf Maintenance Guidelines and may require regular replacement.
2. Damage resulting from failure to maintain the Product in accordance with FieldTurf's Maintenance Guidelines provided to the Purchaser. The Purchaser shall keep a log of all maintenance performed on the Product and supply FieldTurf with a copy upon request. Purchaser acknowledges that organic infill systems such as those in the *PureCob* product require specialized maintenance and care and given the nature of FieldTurf's *PureCob* product, this Warranty shall be conditioned upon the Purchaser carrying out regular *PureCob*-specific field maintenance as specified in FieldTurf's applicable maintenance manuals/guidelines and upon maintaining written logs showing same. Purchaser understands the particular *PureCob*

SAMPLE

Manufacturer's Limited Warranty

requirements for maintaining proper infill levels and agrees, as necessary, to undertake responsibility for infill replenishment and maintenance anywhere infill is naturally displaced. The Purchaser also acknowledges that the characteristics of the *PureCob* materials may result in naturally occurring changes, including but not limited to, color and appearance of the materials within the infill layers; accordingly and without limitation, *PureCob* is subject to a change in color which usually presents as a darker surface color, but which will not affect the performance of the field

3. Damage resulting from repair, attempted repair and/or maintenance by anyone other than FieldTurf, an authorized FieldTurf distributor or an authorized FieldTurf maintainer.
4. Damage due to causes which include, but are not limited to, the application of chemicals and/or cleaning agents, adhesive backing, dirt, traffic, negligence, vandalism, fire, flood, windstorm, animals, improper care and Acts of God.
5. Failure and/or improper design of the base; depression of the soil, subsurface or other matter upon which the base or Product rests; and any and all resulting damage to the Product arising therefrom.
6. FieldTurf does not warrant the percolation rate, long term planarity and/or compaction of the base which the product is installed. **FIELDTURF DISCLAIMS ALL WARRANTIES AS TO THE BASE, EXPRESS OR IMPLIED, AND ANY AND ALL RESULTING DAMAGE TO THE PRODUCT ARISING THEREFROM**.
7. Damage resulting from the use of improper footwear such as long-spiked track shoes, regular and repeated use of steel cleats, and flat-soled shoes. Standard molded soccer or football cleats are recommended.
8. Damage resulting from the inadequate installation, improper maintenance and/or other failure of any third-party shock pad or underlayment pad installed beneath the Product, including, but not limited to, detachment of the Product caused by expansion and/or contraction of the third party shock pad or underlayment pad.

All synthetic turf is subject to normal wear and tear, which does not constitute a manufacturing defect and is not covered by this Warranty. In addition to the other factors listed in this Warranty and without limitation, the extent of the wear and tear depends on the construction of synthetic turf (fiber face weight, stitch rate, fiber pile height and gauge, infill components and maintenance of the field) and the intensity of use of the synthetic turf. The synthetic turf will be stable to light fading with the maximum fading of the synthetic turf during the Warranty period not to exceed fifteen percent (15%) of color loss annually based upon an acceptable grey scale. This Warranty does not cover slight variations or gradations of color within the Product and/or face distortion. Normal behavior of the fiber and infill with respect to the wear pattern of a field is more fully explained in the "Field Settling" document, provided in the FieldTurf After-Sales Service Package and the PureCob "*What to Look Out For*" Handout attached herein as **Appendix 1**.

FieldTurf disclaims all liability for incidental and consequential damages for breach of any express or implied warranty, including any implied warranty of merchantability, with respect to the Product. In the event that the Product be used for purposes other than the sporting activities provided herein or for any other uses for which FieldTurf has provided its written authorization, FieldTurf shall not be responsible for damages resulting therefrom and, therefore, this Warranty, as well as any and all applicable legal warranties, shall become **null and void** as Purchaser understands that FieldTurf has tested the Product for use in connection with the said sporting activities and/or uses, and that it may not have tested the Product for other such uses. Any Product repairs or replacements performed under the terms of this Warranty shall not extend the term of this Warranty.

Name of Purchaser:	**CLIENT NAME**	*Sporting Activities:*	Multi-Sport Use
Date of Completion:		*Installed by:*	FieldTurf USA, Inc.
Location:		*City:*	
Address:		*Zip:*	
State:		*Fax/email:*	
Tel:			
Signature:		*Name :*	Darren Gill
Date:		*Reference:*	8800

SAMPLE

FieldTurf
A Tarkett Sports Company

Manufacturer's Limited Warranty

Appendix 1

FieldTurf®
A Tarkett Sports Company

SUSTAIN THE GAME

PureCob

WHAT TO LOOK OUT FOR

OUR SYSTEMS WITH PURECOB INFILL REQUIRE THE CARE AND MAINTENANCE YOU WOULD EXPECT TO GIVE TO A SYNTHETIC TURF FIELD, BUT THERE ARE SOME SPECIFICS THAT YOU SHOULD B E AWARE OF:

THE FIRST MONTHS AFTER INSTALLATION

It will normally take several months for the infill to fully settle between the grass filaments and some 'static cling' of the natural infill to the synthetic turf fiber is normal. Regular maintenance should start immediately after the handover of the field. For our PureCob infill, it is important to note that during its production process the corncobs will be compressed, and thereafter, the grain will swell by approximately 30% after water is applied. This implies that it may initially look like too little corn cob infill has been applied, however after the field has received a watering by (natural) rainfall, or by wetting the field, the corn cob particles will regain their original volume.

REQUIRED MAINTENANCE

PureCob typically requires additional attention and maintenance. Due to its specific weight, some of the infill material is more mobile, especially during extreme weather. Care should be taken to top up and brush as required. It is possible that the infill may displace during heavy rainfall, however it can be easily redistributed once the playing area has dried out. If infill becomes visible on the playing surface, sprinkling with water, or allowing the rain to fall, will settle the infill back into the system. PureCob retains more water than rubber based infills. As a result, depending on the climate, the high moisture content could lend itself to being vulnerable to freezing due to ambient temperature changes. The maintenance activities of Brushing, Aerating, Raking, and Sweeping should be adhered to.

AESTHETICS

PureCob is a natural material with a natural aesthetic and, over time, the look and shape of the infill granules will alter slightly. Typically, the granules will go darker in colour. This is completely normal and does not affect their performance or durability in any way.

NATURAL INFILLS CAN COOL

PureCob acts as a cooling agent within a synthetic turf system – also adding an additional level of comfort during hot periods.

SAMPLE

This warranty is insured by a third party.

For more information please contact Customer Service at FieldTurf at the number listed below.

7445 Côte-de-Liesse Road Suite 200, Montreal, QC, Canada H4T 1G2 • Toll Free: 1-800-724-2969 •

FieldTurf
A Tarkett Sports Company

Manufacturer's Limited Warranty

Appendix 2

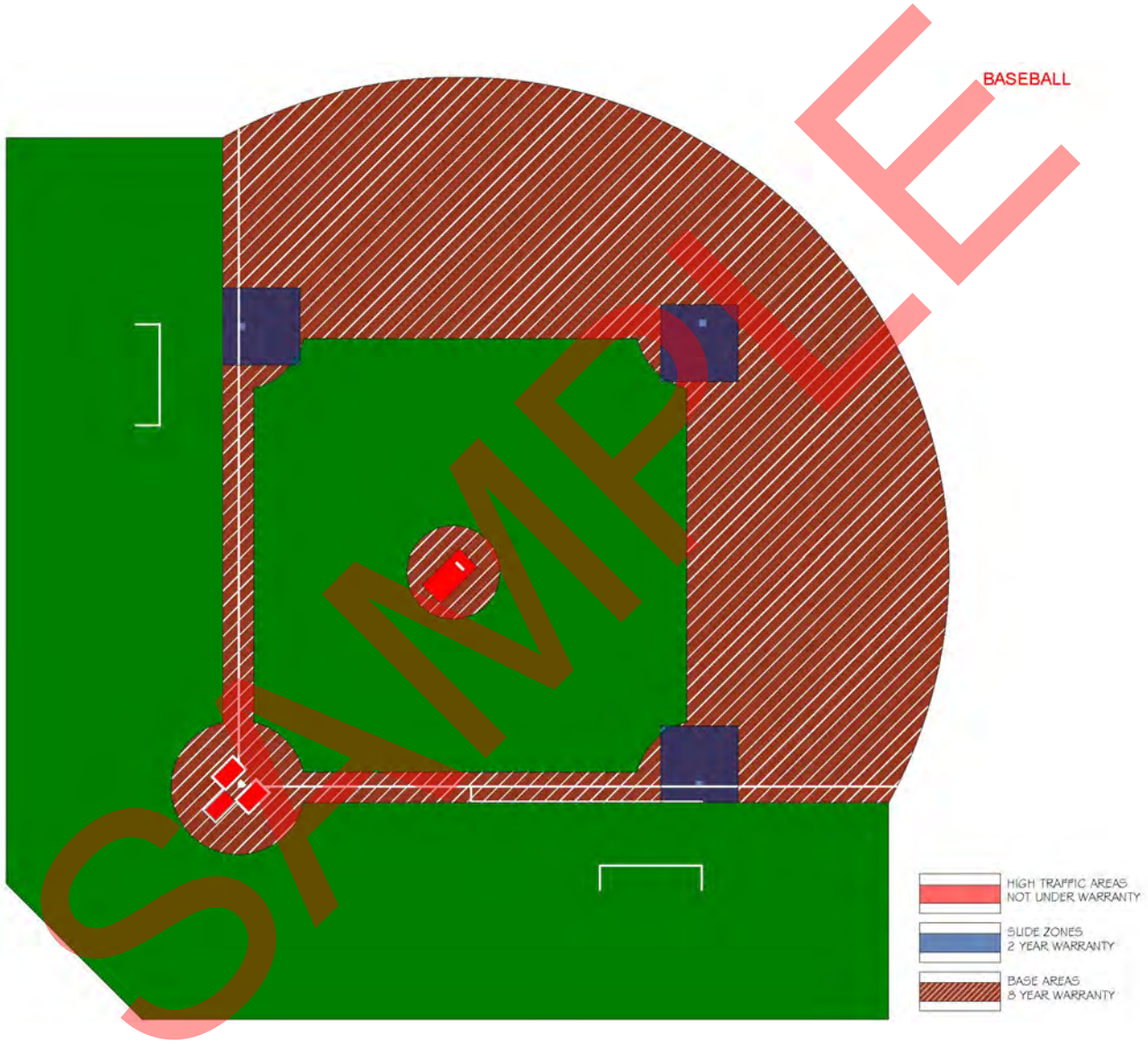

SAMPLE

This warranty is insured by a third party.
For more information please contact Customer Service at FieldTurf at the number listed below.
7445 Côte-de-Liesse Road Suite 200, Montreal, QC, Canada H4T 1G2 • Toll Free: 1-800-724-2969 •

FieldTurf
A Tarkett Sports Company

Manufacturer's Limited Warranty

Appendix 3

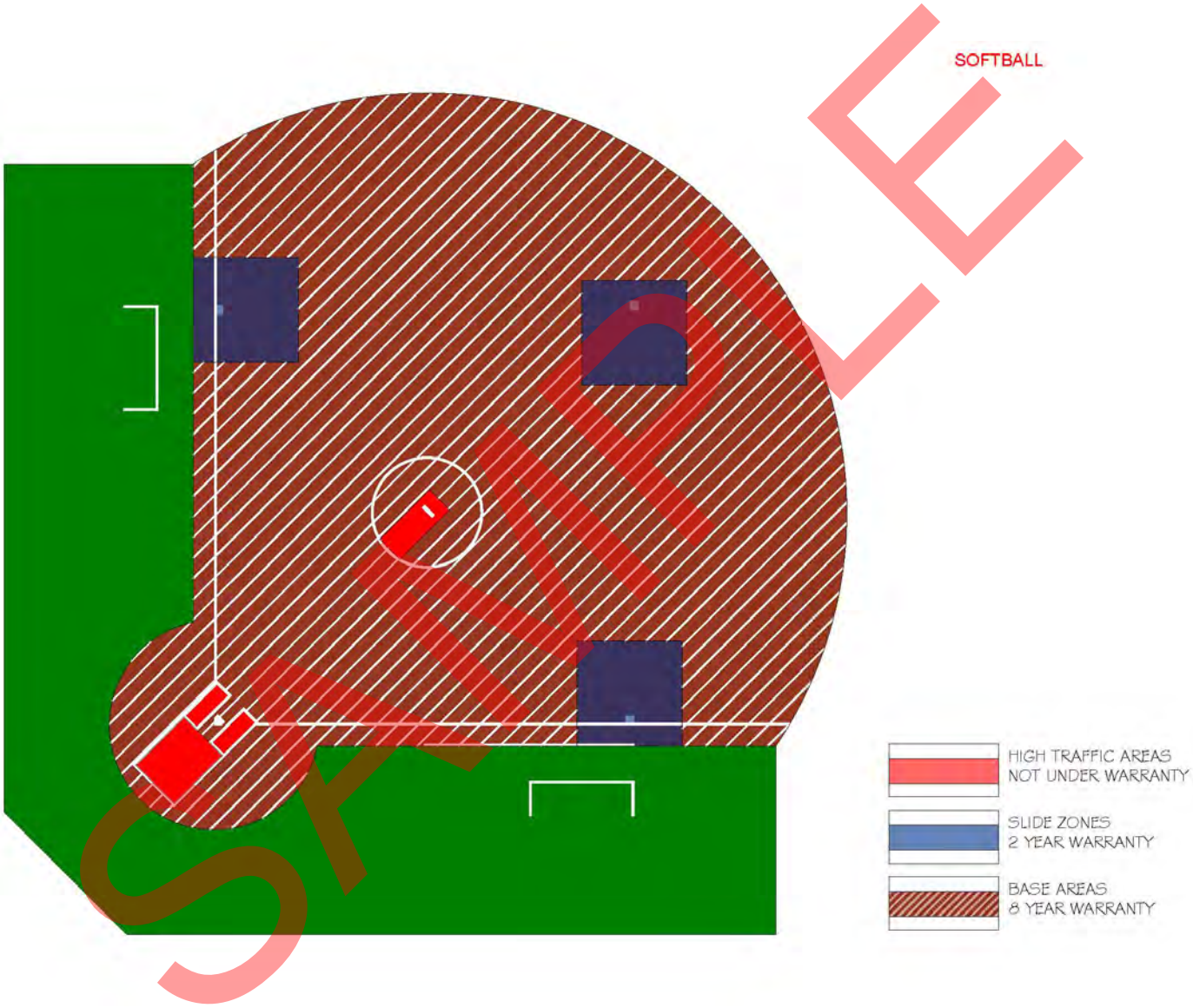

SAMPLE

This warranty is insured by a third party.
For more information please contact Customer Service at FieldTurf at the number listed below.
7445 Côte-de-Liesse Road Suite 200, Montreal, QC, Canada H4T 1G2 • Toll Free: 1-800-724-2969 •

FieldTurf
A Tarkett Sports Company

Manufacturer's Limited Warranty

FieldTurf warrants that if **FieldTurf product code *PureFill*** (Product) for multi-sport use synthetic turf proves to be defective in material or installation workmanship, therefore, resulting in premature wear, during normal and ordinary use of the Product for the sporting activities provided herein or for any other uses for which FieldTurf has provided its written authorization, within **eight (8) years** from the date of completion of installation as indicated in this Warranty, FieldTurf shall either repair or replace the affected area of the Product in accordance with the terms of this Warranty. FieldTurf's sole liability under this Warranty shall be limited to either repair or replacement of the affected area of the Product, at its sole discretion, and FieldTurf shall have no other obligations or liabilities with respect to defects of the Product. FieldTurf will, at FieldTurf's option, either repair or replace the affected area to the extent required to meet the Warranty period, but no cash refunds will be made**.** FieldTurf warrants that all materials installed meet or exceed the product specifications and further warrants that replacement material will be available through the Warranty period. FieldTurf will verify that their representative has inspected the installation and that the work conforms to FieldTurf's requirements and further warrants that the installation was done in accordance with both FieldTurf's recommendations and any written directives of FieldTurf's representative. This Warranty shall commence upon the date of completion indicated in this Warranty. The accompanying Warranty service will not come into effect unless and until FieldTurf's Certificate of Completion is sent for validation to the corporate office of FieldTurf indicated herein within thirty (30) days of the date of completion or Purchaser's first use, whichever occurs first. In all cases, the Warranty shall be deemed to commence upon the date of completion indicated in this Warranty. The acceptance form of the terms and conditions contained in FieldTurf's Maintenance Guidelines must also be provided to FieldTurf's corporate office within thirty (30) days of completion of installation. FieldTurf warrants that the G-max shall maintain a value (option 1: below one hundred thirty-five (135) at installation and no greater than one hundred eight-five (185)) or option 2: (that shall not exceed two hundred (200)) for the duration of the warranty, as per ASTM 1936 and F-355 standards, providing that the customer has performed the regular maintenance as outlined in the maintenance guidelines. This Warranty is limited to the remedies of repair or replacement, which shall constitute the exclusive remedies available under this Warranty; all other remedies or recourses which might otherwise be available are hereby waived by the Purchaser. FieldTurf will have no other obligations or liability for damages arising out of or in connection with the use or performance of the Product, including, but without limitation, damages for personal injury and/or economic losses. This Warranty shall not come into effect, and FieldTurf shall have no obligations under this Warranty, unless and until FieldTurf is paid in full for the Product to be warranted hereunder. **As concerns the designated high-traffic areas, which include, but are not limited to, the home plate, pitcher's mound, pitcher's lane, catcher's box, batting cage and bullpen areas, the foregoing Warranty does not apply. Notwithstanding anything contained herein, the base areas and slide zones, which also constitute as high traffic areas, shall be covered by this Warranty, except that the applicable Warranty period shall be limited to a two (2) year Manufacturer's Warranty (see Appendices 2 and 3).**

Field Markings: Baseball, Softball

Other Exclusions

EXCEPT AS EXPRESSLY SET FORTH IN THE MANUFACTURER'S LIMITED WARRANTY ABOVE, FIELDTURF DISCLAIMS ALL OTHER WARRANTIES OF ANY KIND, EXPRESS OR IMPLIED, IN FACT OR IN LAW, INCLUDING, BUT NOT LIMITED TO, THE IMPLIED WARRANTIES OF MERCHANTABILITY AND FITNESS FOR A PARTICULAR PURPOSE.

THIS WARRANTY SHALL BECOME NULL AND VOID IF THE PURCHASER FAILS TO MAINTAIN THE FIELD IN ACCORDANCE WITH THE FIELDTURF MAINTENANCE GUIDELINES AND SCHEDULE PROVIDED BY FIELDTURF THEREIN. ALL MAINTENANCE SHALL BE PERFORMED BY FIELDTURF-TRAINED AND/OR FIELDTURF-AUTHORIZED MAINTENANCE PERSONNEL ONLY.

Furthermore, this Manufacturer's Limited Warranty ***does not cover***:

1. Any damage resulting, directly or indirectly, from force majeure, accident, misuse, intentional and unintentional abuse, infill displacement, neglect; or from usage, unintentional or otherwise, that cannot reasonably be considered as normal play or ordinary use of the Product. For purposes of this Warranty, normal play and ordinary use shall mean usage up to 3,000 hours per year of regular play and utilization for the sporting activities provided herein; normal play and ordinary use also includes a reasonable number of users or participants, but does not include repetitive marching, repetitive training or high-intensity drills on the same part of the field, especially in the areas of, but not limited to, home plate, pitcher's mound, base areas, base paths all of which require frequent maintenance in accordance with FieldTurf Maintenance Guidelines and may require regular replacement.

2. Damage resulting from failure to maintain the Product in accordance with FieldTurf's Maintenance Guidelines provided to the Purchaser. The Purchaser shall keep a log of all maintenance performed on the Product and supply FieldTurf with a copy upon request. Purchaser acknowledges that organic infill systems such as those in the *PureFill* product require specialized maintenance and care and given the nature of FieldTurf's *PureFill* product, this Warranty shall be conditioned upon the Purchaser carrying out regular *PureFill*-specific field maintenance as

SAMPLE

FieldTurf
A Tarkett Sports Company

Manufacturer's Limited Warranty

specified in FieldTurf's applicable maintenance manuals/guidelines and upon maintaining written logs showing same. Purchaser understands the particular *PureFill* requirements for maintaining proper infill levels and agrees, as necessary, to undertake responsibility for infill replenishment and maintenance anywhere infill is naturally displaced. The Purchaser also acknowledges that the characteristics of the *PureFill* materials may result in naturally occurring changes, including but not limited to, color and appearance of the materials within the infill layers; accordingly and without limitation, *PureFill* is subject to a change in color which usually presents as a darker surface color, but which will not affect the performance of the field

3. Damage resulting from repair, attempted repair and/or maintenance by anyone other than FieldTurf, an authorized FieldTurf distributor or an authorized FieldTurf maintainer.
4. Damage due to causes which include, but are not limited to, the application of chemicals and/or cleaning agents, adhesive backing, dirt, traffic, negligence, vandalism, fire, flood, windstorm, animals, improper care and Acts of God.
5. Failure and/or improper design of the base; depression of the soil, subsurface or other matter upon which the base or Product rests; and any and all resulting damage to the Product arising therefrom.
6. FieldTurf does not warrant the percolation rate, long term planarity and/or compaction of the base which the product is installed. **FIELDTURF DISCLAIMS ALL WARRANTIES AS TO THE BASE, EXPRESS OR IMPLIED, AND ANY AND ALL RESULTING DAMAGE TO THE PRODUCT ARISING THEREFROM**.
7. Damage resulting from the use of improper footwear such as long-spiked track shoes, regular and repeated use of steel cleats, and flat-soled shoes. Standard molded soccer or football cleats are recommended.
8. Damage resulting from the inadequate installation, improper maintenance and/or other failure of any third-party shock pad or underlayment pad installed beneath the Product, including, but not limited to, detachment of the Product caused by expansion and/or contraction of the third-party shock pad or underlayment pad.

All synthetic turf is subject to normal wear and tear, which does not constitute a manufacturing defect and is not covered by this Warranty. In addition to the other factors listed in this Warranty and without limitation, the extent of the wear and tear depends on the construction of synthetic turf (fiber face weight, stitch rate, fiber pile height and gauge, infill components and maintenance of the field) and the intensity of use of the synthetic turf. The synthetic turf will be stable to light fading with the maximum fading of the synthetic turf during the Warranty period not to exceed fifteen percent (15%) of color loss annually based upon an acceptable grey scale. This Warranty does not cover slight variations or gradations of color within the Product and/or face distortion. Normal behavior of the fiber and infill with respect to the wear pattern of a field is more fully explained in the "Field Settling" document, provided in the FieldTurf After-Sales Service Package and the PureFill "*What to Look Out For*" Handout attached herein as **Appendix 1**.

FieldTurf disclaims all liability for incidental and consequential damages for breach of any express or implied warranty, including any implied warranty of merchantability, with respect to the Product. In the event that the Product be used for purposes other than the sporting activities provided herein or for any other uses for which FieldTurf has provided its written authorization, FieldTurf shall not be responsible for damages resulting therefrom and, therefore, this Warranty, as well as any and all applicable legal warranties, shall become **null and void** as Purchaser understands that FieldTurf has tested the Product for use in connection with the said sporting activities and/or uses, and that it may not have tested the Product for other such uses. Any Product repairs or replacements performed under the terms of this Warranty shall not extend the term of this Warranty.

Name of Purchaser:	**CLIENT NAME**	*Sporting Activities:*	Multi-Sport Use
Date of Completion:		*Installed by:*	FieldTurf USA, Inc.
Location:		*City:*	
Address:		*Zip:*	
State:		*Fax/email:*	
Tel:			
Signature:		*Name :*	Darren Gill
Date:		*Reference:*	8800

SAMPLE

This warranty is insured by a third party.
For more information please contact Customer Service at FieldTurf at the number listed below.
7445 Côte-de-Liesse Road Suite 200, Montreal, QC, Canada H4T 1G2 • Toll Free: 1-800-724-2969 •

FieldTurf
A Tarkett Sports Company

Manufacturer's Limited Warranty

Appendix 1

FieldTurf®
A Tarkett Sports Company

SUSTAIN THE GAME

PureFill

WHAT TO LOOK OUT FOR

OUR SYSTEMS WITH PUREFILL INFILL REQUIRE THE CARE AND MAINTENANCE YOU WOULD EXPECT TO GIVE TO A SYNTHETIC TURF FIELD, BUT THERE ARE SOME SPECIFICS THAT YOU SHOULD B E AWARE OF:

THE FIRST MONTHS AFTER INSTALLATION

It will normally take several months for the infill to fully settle between the grass filaments and some 'static cling' of the natural infill to the synthetic turf fiber is normal. Regular maintenance should start immediately after the handover of the field.

REQUIRED MAINTENANCE

PureFill typically requires additional attention and maintenance. Due to its specific weight, some of the infill material is more mobile, especially during extreme weather. Care should be taken to top up and brush as required. It is possible that the infill may displace during heavy rainfall, however it can be easily redistributed once the playing area has dried out. If infill becomes visible on the playing surface, sprinkling with water, or allowing the rain to fall, will settle the infill back into the system. PureFill retains more water than rubber based infills. As a result, depending on the climate, the high moisture content could lend itself to being vulnerable to freezing due to ambient temperature changes. The maintenance activities of Brushing, Aerating, Raking, and Sweeping should be adhered to.

AESTHETICS

PureFill is a natural material with a natural aesthetic and, over time, the look and shape of the infill granules will alter slightly. Typically, the granules will go darker in colour. This is completely normal and does not affect their performance or durability in any way.

NATURAL INFILLS CAN COOL

PureFill acts as a cooling agent within a synthetic turf system – also adding an additional level of comfort during hot periods.

fieldturf.com

This warranty is insured by a third party.

For more information please contact Customer Service at FieldTurf at the number listed below.

7445 Côte-de-Liesse Road Suite 200, Montreal, QC, Canada H4T 1G2 • Toll Free: 1-800-724-2969 •

Manufacturer's Limited Warranty

Appendix 2

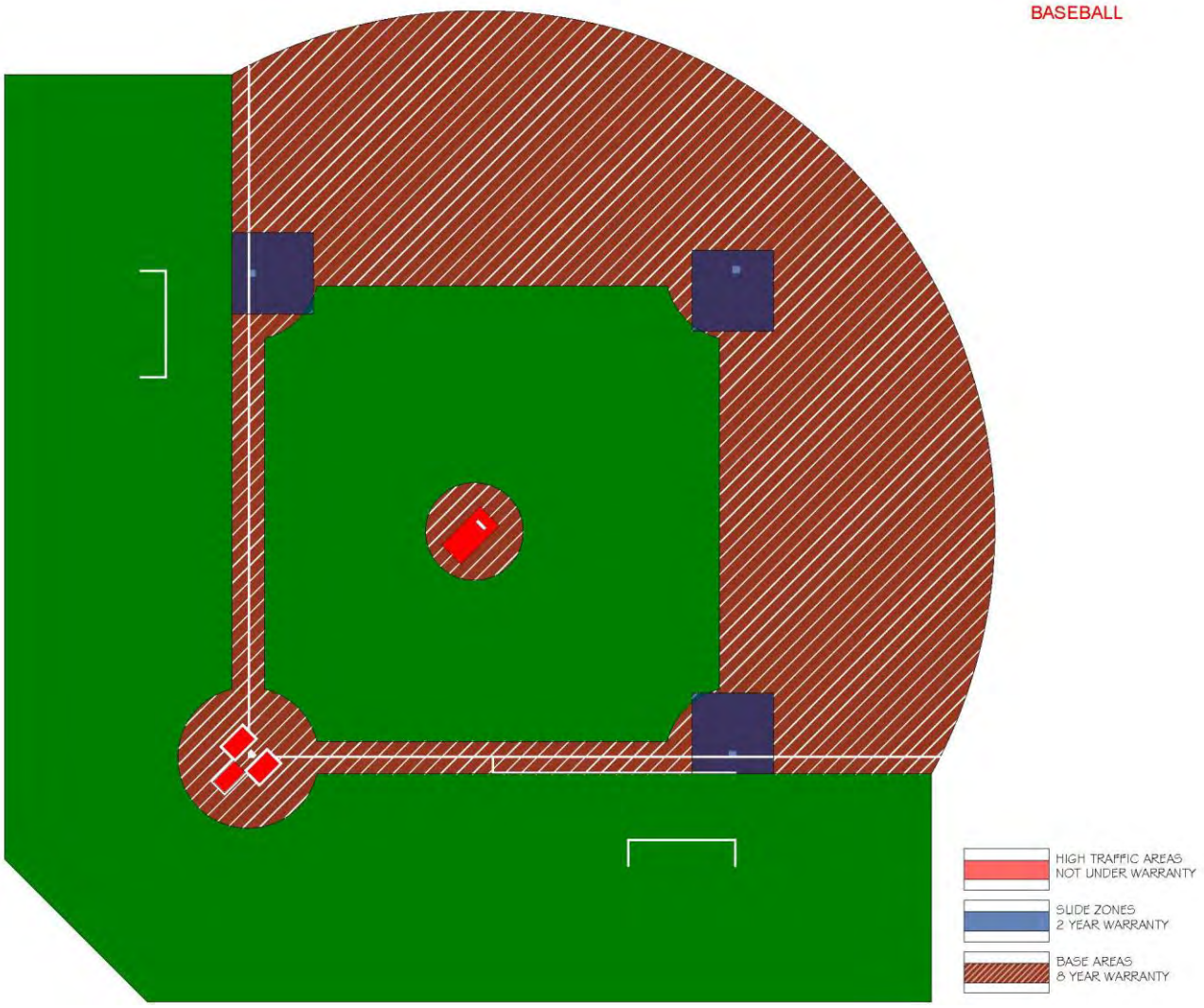

Manufacturer's Limited Warranty

Appendix 3

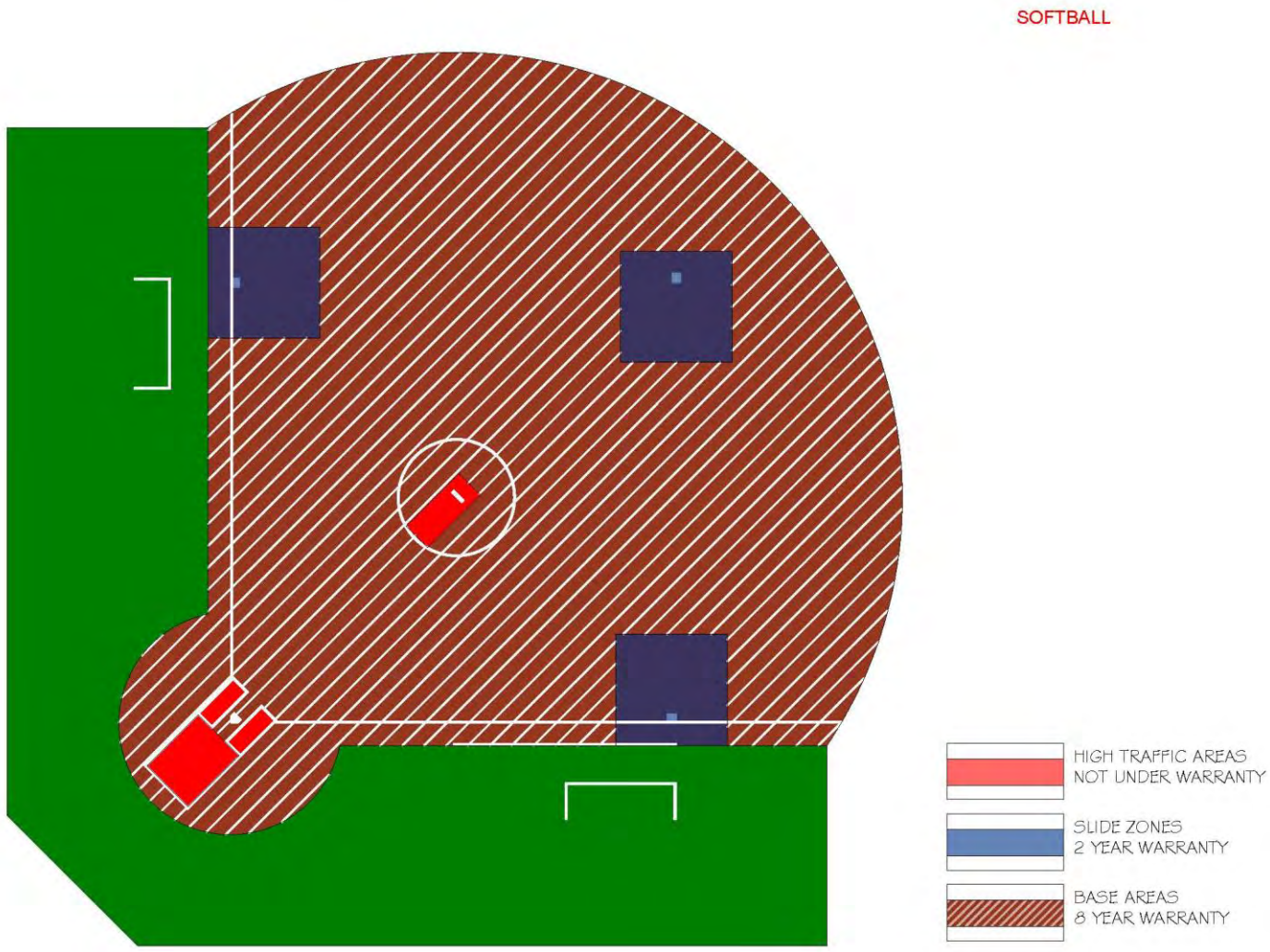

FieldTurf
A Tarkett Sports Company

Manufacturer's Limited Warranty

FieldTurf warrants that if **FieldTurf product code *PureFill*** (Product) for multi-sport use synthetic turf proves to be defective in material or installation workmanship, therefore, resulting in premature wear, during normal and ordinary use of the Product for the sporting activities provided herein or for any other uses for which FieldTurf has provided its written authorization, within **eight (8) years** from the date of completion of installation as indicated in this Warranty, FieldTurf shall either repair or replace the affected area of the Product in accordance with the terms of this Warranty. FieldTurf's sole liability under this Warranty shall be limited to either repair or replacement of the affected area of the Product, at its sole discretion, and FieldTurf shall have no other obligations or liabilities with respect to defects of the Product. FieldTurf will, at FieldTurf's option, either repair or replace the affected area to the extent required to meet the Warranty period, but no cash refunds will be made**.** This Warranty shall commence upon the date of completion indicated in this Warranty. The accompanying Warranty service will not come into effect unless and until FieldTurf's Certificate of Completion is sent for validation to the corporate office of FieldTurf indicated herein within thirty (30) days of the date of completion or Purchaser's first use, whichever occurs first. In all cases, the Warranty shall be deemed to commence upon the date of completion indicated in this Warranty. The acceptance form of the terms and conditions contained in FieldTurf's Maintenance Guidelines must also be provided to FieldTurf's corporate office within thirty (30) days of completion of installation. This Warranty is limited to the remedies of repair or replacement, which shall constitute the exclusive remedies available under this Warranty; all other remedies or recourses which might otherwise be available are hereby waived by the Purchaser. FieldTurf will have no other obligations or liability for damages arising out of or in connection with the use or performance of the Product, including, but without limitation, damages for personal injury and/or economic losses. This Warranty shall not come into effect, and FieldTurf shall have no obligations under this Warranty, unless and until FieldTurf is paid in full for the Product to be warranted hereunder. **As concerns the designated high-traffic areas, which include, but are not limited to, the home plate, pitcher's mound, pitcher's lane, catcher's box, batting cage and bullpen areas, the foregoing Warranty does not apply. Notwithstanding anything contained herein, the base areas and slide zones, which also constitute as high traffic areas, shall be covered by this Warranty, except that the applicable Warranty period shall be limited to a two (2) year Manufacturer's Warranty (see Appendices 2 and 3).**

Field Markings: Baseball, Softball

Other Exclusions

EXCEPT AS EXPRESSLY SET FORTH IN THE MANUFACTURER'S LIMITED WARRANTY ABOVE, FIELDTURF DISCLAIMS ALL OTHER WARRANTIES OF ANY KIND, EXPRESS OR IMPLIED, IN FACT OR IN LAW, INCLUDING, BUT NOT LIMITED TO, THE IMPLIED WARRANTIES OF MERCHANTABILITY AND FITNESS FOR A PARTICULAR PURPOSE.

THIS WARRANTY SHALL BECOME NULL AND VOID IF THE PURCHASER FAILS TO MAINTAIN THE FIELD IN ACCORDANCE WITH THE FIELDTURF MAINTENANCE GUIDELINES AND SCHEDULE PROVIDED BY FIELDTURF THEREIN. ALL MAINTENANCE SHALL BE PERFORMED BY FIELDTURF-TRAINED AND/OR FIELDTURF-AUTHORIZED MAINTENANCE PERSONNEL ONLY.

Furthermore, this Manufacturer's Limited Warranty ***does not cover****:*

1. Any damage resulting, directly or indirectly, from force majeure, accident, misuse, intentional and unintentional abuse, infill displacement, neglect; or from usage, unintentional or otherwise, that cannot reasonably be considered as normal play or ordinary use of the Product. For purposes of this Warranty, normal play and ordinary use shall mean usage up to 3,000 hours per year of regular play and utilization for the sporting activities provided herein; normal play and ordinary use also includes a reasonable number of users or participants, but does not include repetitive marching, repetitive training or high-intensity drills on the same part of the field, especially in the areas of, but not limited to, home plate, pitcher's mound, base areas, base paths all of which require frequent maintenance in accordance with FieldTurf Maintenance Guidelines and may require regular replacement.

2. Damage resulting from failure to maintain the Product in accordance with FieldTurf's Maintenance Guidelines provided to the Purchaser. The Purchaser shall keep a log of all maintenance performed on the Product and supply FieldTurf with a copy upon request. Purchaser acknowledges that organic infill systems such as those in the *PureFill* product require specialized maintenance and care and given the nature of FieldTurf's *PureFill* product, this Warranty shall be conditioned upon the Purchaser carrying out regular *PureFill*-specific field maintenance as specified in FieldTurf's applicable maintenance manuals/guidelines and upon maintaining written logs showing same. Purchaser understands the particular *PureFill*

SAMPLE

Manufacturer's Limited Warranty

requirements for maintaining proper infill levels and agrees, as necessary, to undertake responsibility for infill replenishment and maintenance anywhere infill is naturally displaced. The Purchaser also acknowledges that the characteristics of the *PureFill* materials may result in naturally occurring changes, including but not limited to, color and appearance of the materials within the infill layers; accordingly and without limitation, *PureFill* is subject to a change in color which usually presents as a darker surface color, but which will not affect the performance of the field

3. Damage resulting from repair, attempted repair and/or maintenance by anyone other than FieldTurf, an authorized FieldTurf distributor or an authorized FieldTurf maintainer.
4. Damage due to causes which include, but are not limited to, the application of chemicals and/or cleaning agents, adhesive backing, dirt, traffic, negligence, vandalism, fire, flood, windstorm, animals, improper care and Acts of God.
5. Failure and/or improper design of the base; depression of the soil, subsurface or other matter upon which the base or Product rests; and any and all resulting damage to the Product arising therefrom.
6. FieldTurf does not warrant the percolation rate, long term planarity and/or compaction of the base which the product is installed. **FIELDTURF DISCLAIMS ALL WARRANTIES AS TO THE BASE, EXPRESS OR IMPLIED, AND ANY AND ALL RESULTING DAMAGE TO THE PRODUCT ARISING THEREFROM**.
7. Damage resulting from the use of improper footwear such as long-spiked track shoes, regular and repeated use of steel cleats, and flat-soled shoes. Standard molded soccer or football cleats are recommended.
8. Damage resulting from the inadequate installation, improper maintenance and/or other failure of any third-party shock pad or underlayment pad installed beneath the Product, including, but not limited to, detachment of the Product caused by expansion and/or contraction of the third party shock pad or underlayment pad.

All synthetic turf is subject to normal wear and tear, which does not constitute a manufacturing defect and is not covered by this Warranty. In addition to the other factors listed in this Warranty and without limitation, the extent of the wear and tear depends on the construction of synthetic turf (fiber face weight, stitch rate, fiber pile height and gauge, infill components and maintenance of the field) and the intensity of use of the synthetic turf. The synthetic turf will be stable to light fading with the maximum fading of the synthetic turf during the Warranty period not to exceed fifteen percent (15%) of color loss annually based upon an acceptable grey scale. This Warranty does not cover slight variations or gradations of color within the Product and/or face distortion. Normal behavior of the fiber and infill with respect to the wear pattern of a field is more fully explained in the "Field Settling" document, provided in the FieldTurf After-Sales Service Package and the PureFill "*What to Look Out For*" Handout attached herein as **Appendix 1**.

FieldTurf disclaims all liability for incidental and consequential damages for breach of any express or implied warranty, including any implied warranty of merchantability, with respect to the Product. In the event that the Product be used for purposes other than the sporting activities provided herein or for any other uses for which FieldTurf has provided its written authorization, FieldTurf shall not be responsible for damages resulting therefrom and, therefore, this Warranty, as well as any and all applicable legal warranties, shall become **null and void** as Purchaser understands that FieldTurf has tested the Product for use in connection with the said sporting activities and/or uses, and that it may not have tested the Product for other such uses. Any Product repairs or replacements performed under the terms of this Warranty shall not extend the term of this Warranty.

Name of Purchaser:	**CLIENT NAME**	*Sporting Activities:*	Multi-Sport Use
Date of Completion:		*Installed by:*	FieldTurf USA, Inc.
Location:		*City:*	
Address:		*Zip:*	
State:		*Fax/email:*	
Tel:			
Signature:		*Name :*	Darren Gill
Date:		*Reference:*	8800

SAMPLE

FieldTurf
A Tarkett Sports Company

Manufacturer's Limited Warranty

Appendix 1

FieldTurf®
A Tarkett Sports Company

SUSTAIN THE GAME

PureFill

WHAT TO LOOK OUT FOR

OUR SYSTEMS WITH PUREFILL INFILL REQUIRE THE CARE AND MAINTENANCE YOU WOULD EXPECT TO GIVE TO A SYNTHETIC TURF FIELD, BUT THERE ARE SOME SPECIFICS THAT YOU SHOULD B E AWARE OF:

THE FIRST MONTHS AFTER INSTALLATION

It will normally take several months for the infill to fully settle between the grass filaments and some 'static cling' of the natural infill to the synthetic turf fiber is normal. Regular maintenance should start immediately after the handover of the field.

REQUIRED MAINTENANCE

PureFill typically requires additional attention and maintenance. Due to its specific weight, some of the infill material is more mobile, especially during extreme weather. Care should be taken to top up and brush as required. It is possible that the infill may displace during heavy rainfall, however it can be easily redistributed once the playing area has dried out. If infill becomes visible on the playing surface, sprinkling with water, or allowing the rain to fall, will settle the infill back into the system. PureFill retains more water than rubber based infills. As a result, depending on the climate, the high moisture content could lend itself to being vulnerable to freezing due to ambient temperature changes. The maintenance activities of Brushing, Aerating, Raking, and Sweeping should be adhered to.

AESTHETICS

PureFill is a natural material with a natural aesthetic and, over time, the look and shape of the infill granules will alter slightly. Typically, the granules will go darker in colour. This is completely normal and does not affect their performance or durability in any way.

NATURAL INFILLS CAN COOL

PureFill acts as a cooling agent within a synthetic turf system – also adding an additional level of comfort during hot periods.

SAMPLE

This warranty is insured by a third party.
For more information please contact Customer Service at FieldTurf at the number listed below.
7445 Côte-de-Liesse Road Suite 200, Montreal, QC, Canada H4T 1G2 • Toll Free: 1-800-724-2969 •

Manufacturer's Limited Warranty

Appendix 2

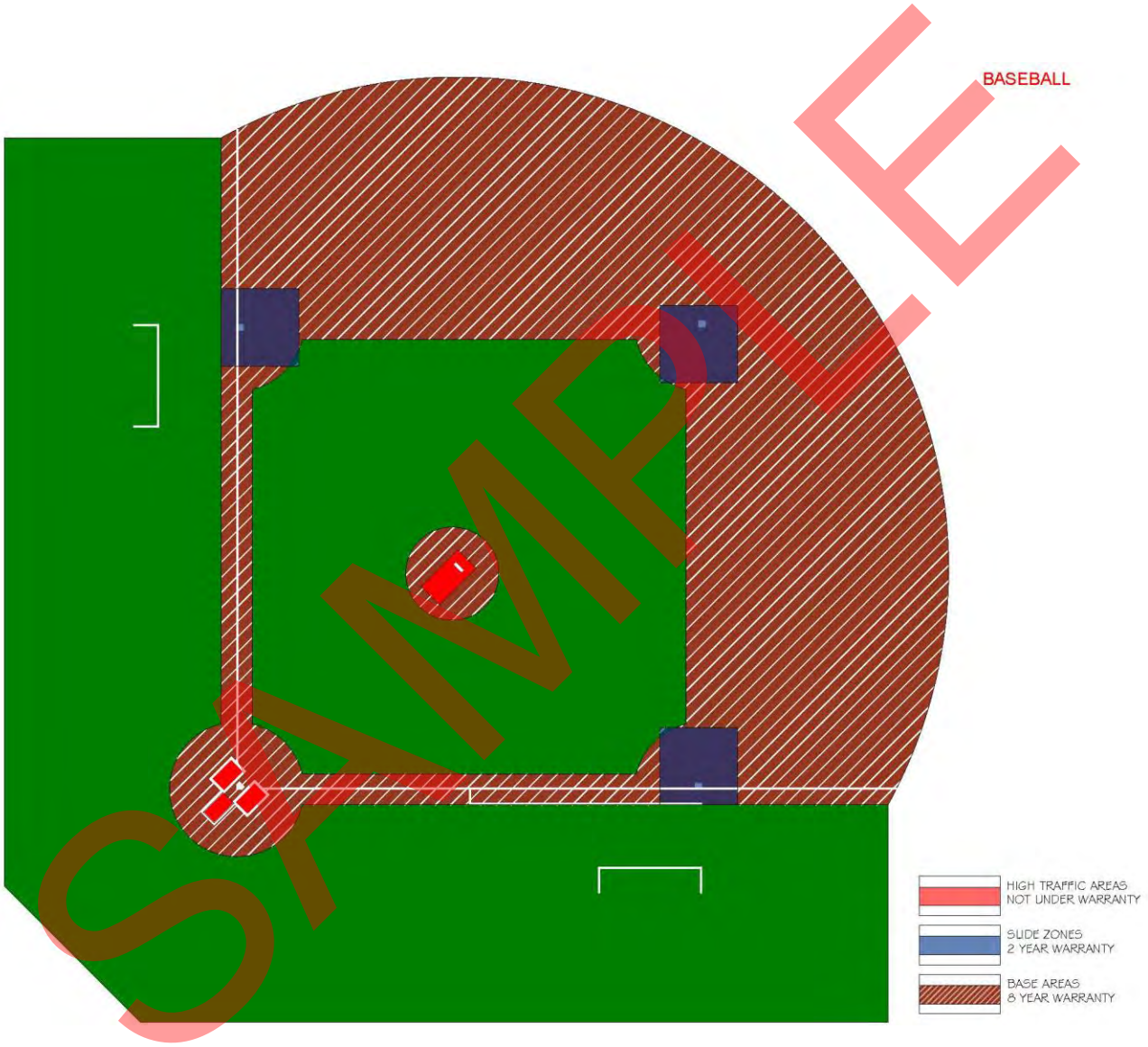

SAMPLE

This warranty is insured by a third party.

For more information please contact Customer Service at FieldTurf at the number listed below.

7445 Côte-de-Liesse Road Suite 200, Montreal, QC, Canada H4T 1G2 • Toll Free: 1-800-724-2969 •

Manufacturer's Limited Warranty

Appendix 3

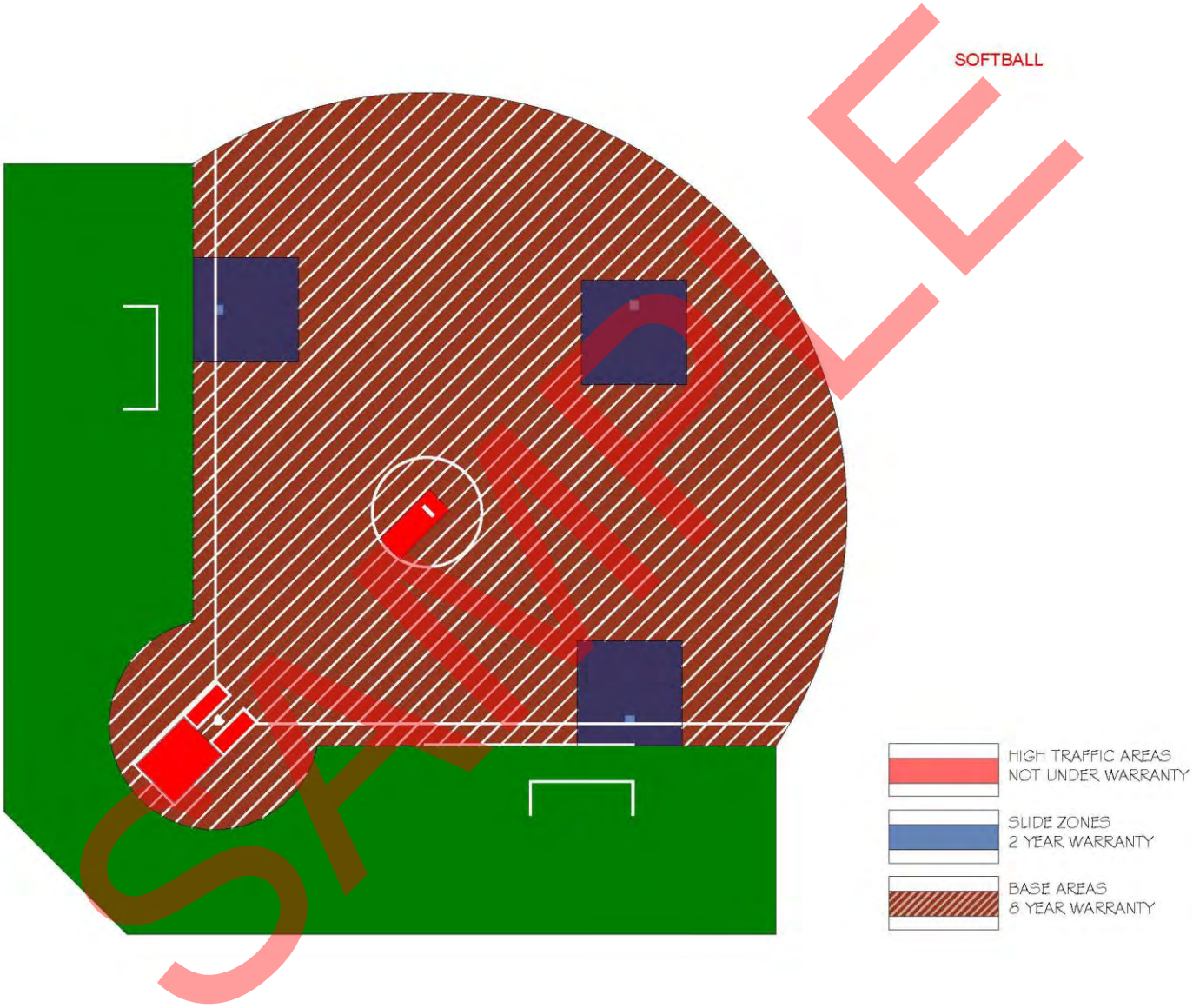

SAMPLE

This warranty is insured by a third party.

For more information please contact Customer Service at FieldTurf at the number listed below.

7445 Côte-de-Liesse Road Suite 200, Montreal, QC, Canada H4T 1G2 • Toll Free: 1-800-724-2969 •

FieldTurf
A Tarkett Sports Company

Manufacturer's Limited Warranty

FieldTurf warrants that if **FieldTurf product code *PureSelect*** (Product) for multi-sport use synthetic turf proves to be defective in material or installation workmanship, therefore, resulting in premature wear, during normal and ordinary use of the Product for the sporting activities provided herein or for any other uses for which FieldTurf has provided its written authorization, within **eight (8) years** from the date of completion of installation as indicated in this Warranty, FieldTurf shall either repair or replace the affected area of the Product in accordance with the terms of this Warranty. FieldTurf's sole liability under this Warranty shall be limited to either repair or replacement of the affected area of the Product, at its sole discretion, and FieldTurf shall have no other obligations or liabilities with respect to defects of the Product. FieldTurf will, at FieldTurf's option, either repair or replace the affected area to the extent required to meet the Warranty period, but no cash refunds will be made**.** FieldTurf warrants that all materials installed meet or exceed the product specifications and further warrants that replacement material will be available through the Warranty period. FieldTurf will verify that their representative has inspected the installation and that the work conforms to FieldTurf's requirements and further warrants that the installation was done in accordance with both FieldTurf's recommendations and any written directives of FieldTurf's representative. This Warranty shall commence upon the date of completion indicated in this Warranty. The accompanying Warranty service will not come into effect unless and until FieldTurf's Certificate of Completion is sent for validation to the corporate office of FieldTurf indicated herein within thirty (30) days of the date of completion or Purchaser's first use, whichever occurs first. In all cases, the Warranty shall be deemed to commence upon the date of completion indicated in this Warranty. The acceptance form of the terms and conditions contained in FieldTurf's Maintenance Guidelines must also be provided to FieldTurf's corporate office within thirty (30) days of completion of installation. FieldTurf warrants that the G-max shall maintain a value (option 1: below one hundred thirty-five (135) at installation and no greater than one hundred eight-five (185)) or option 2: (that shall not exceed two hundred (200)) for the duration of the warranty, as per ASTM 1936 and F-355 standards, providing that the customer has performed the regular maintenance as outlined in the maintenance guidelines. This Warranty is limited to the remedies of repair or replacement, which shall constitute the exclusive remedies available under this Warranty; all other remedies or recourses which might otherwise be available are hereby waived by the Purchaser. FieldTurf will have no other obligations or liability for damages arising out of or in connection with the use or performance of the Product, including, but without limitation, damages for personal injury and/or economic losses. This Warranty shall not come into effect, and FieldTurf shall have no obligations under this Warranty, unless and until FieldTurf is paid in full for the Product to be warranted hereunder. **As concerns the designated high-traffic areas, which include, but are not limited to, the home plate, pitcher's mound, pitcher's lane, catcher's box, batting cage and bullpen areas, the foregoing Warranty does not apply. Notwithstanding anything contained herein, the base areas and slide zones, which also constitute as high traffic areas, shall be covered by this Warranty, except that the applicable Warranty period shall be limited to a two (2) year Manufacturer's Warranty (see Appendices 2 and 3).**

Field Markings: Baseball, Softball

Other Exclusions

EXCEPT AS EXPRESSLY SET FORTH IN THE MANUFACTURER'S LIMITED WARRANTY ABOVE, FIELDTURF DISCLAIMS ALL OTHER WARRANTIES OF ANY KIND, EXPRESS OR IMPLIED, IN FACT OR IN LAW, INCLUDING, BUT NOT LIMITED TO, THE IMPLIED WARRANTIES OF MERCHANTABILITY AND FITNESS FOR A PARTICULAR PURPOSE.

THIS WARRANTY SHALL BECOME NULL AND VOID IF THE PURCHASER FAILS TO MAINTAIN THE FIELD IN ACCORDANCE WITH THE FIELDTURF MAINTENANCE GUIDELINES AND SCHEDULE PROVIDED BY FIELDTURF THEREIN. ALL MAINTENANCE SHALL BE PERFORMED BY FIELDTURF-TRAINED AND/OR FIELDTURF-AUTHORIZED MAINTENANCE PERSONNEL ONLY.

Furthermore, this Manufacturer's Limited Warranty ***does not cover***:

1. Any damage resulting, directly or indirectly, from force majeure, accident, misuse, intentional and unintentional abuse, infill displacement, neglect; or from usage, unintentional or otherwise, that cannot reasonably be considered as normal play or ordinary use of the Product. For purposes of this Warranty, normal play and ordinary use shall mean usage up to 3,000 hours per year of regular play and utilization for the sporting activities provided herein; normal play and ordinary use also includes a reasonable number of users or participants, but does not include repetitive marching, repetitive training or high-intensity drills on the same part of the field, especially in the areas of, but not limited to, home plate, pitcher's mound, base areas, base paths all of which require frequent maintenance in accordance with FieldTurf Maintenance Guidelines and may require regular replacement.

2. Damage resulting from failure to maintain the Product in accordance with FieldTurf's Maintenance Guidelines provided to the Purchaser. The Purchaser shall keep a log of all maintenance performed on the Product and supply FieldTurf with a copy upon request. Purchaser acknowledges that organic infill systems such as those in the *PureSelect* product require specialized maintenance and care and given the nature of FieldTurf's *PureSelect* product, this Warranty shall be conditioned upon the Purchaser carrying out regular *PureSelect*-specific field

SAMPLE

FieldTurf
A Tarkett Sports Company

Manufacturer's Limited Warranty

maintenance as specified in FieldTurf's applicable maintenance manuals/guidelines and upon maintaining written logs showing same. Purchaser understands the particular *PureSelect* requirements for maintaining proper infill levels and agrees, as necessary, to undertake responsibility for infill replenishment and maintenance anywhere infill is naturally displaced. The Purchaser also acknowledges that the characteristics of the *PureSelect* materials may result in naturally occurring changes, including but not limited to, color and appearance of the materials within the infill layers; accordingly and without limitation, *PureSelect* is subject to a change in color which usually presents as a darker surface color, but which will not affect the performance of the field

3. Damage resulting from repair, attempted repair and/or maintenance by anyone other than FieldTurf, an authorized FieldTurf distributor or an authorized FieldTurf maintainer.
4. Damage due to causes which include, but are not limited to, the application of chemicals and/or cleaning agents, adhesive backing, dirt, traffic, negligence, vandalism, fire, flood, windstorm, animals, improper care and Acts of God.
5. Failure and/or improper design of the base; depression of the soil, subsurface or other matter upon which the base or Product rests; and any and all resulting damage to the Product arising therefrom.
6. FieldTurf does not warrant the percolation rate, long term planarity and/or compaction of the base which the product is installed. **FIELDTURF DISCLAIMS ALL WARRANTIES AS TO THE BASE, EXPRESS OR IMPLIED, AND ANY AND ALL RESULTING DAMAGE TO THE PRODUCT ARISING THEREFROM**.
7. Damage resulting from the use of improper footwear such as long-spiked track shoes, regular and repeated use of steel cleats, and flat-soled shoes. Standard molded soccer or football cleats are recommended.
8. Damage resulting from the inadequate installation, improper maintenance and/or other failure of any third-party shock pad or underlayment pad installed beneath the Product, including, but not limited to, detachment of the Product caused by expansion and/or contraction of the third-party shock pad or underlayment pad.

All synthetic turf is subject to normal wear and tear, which does not constitute a manufacturing defect and is not covered by this Warranty. In addition to the other factors listed in this Warranty and without limitation, the extent of the wear and tear depends on the construction of synthetic turf (fiber face weight, stitch rate, fiber pile height and gauge, infill components and maintenance of the field) and the intensity of use of the synthetic turf. The synthetic turf will be stable to light fading with the maximum fading of the synthetic turf during the Warranty period not to exceed fifteen percent (15%) of color loss annually based upon an acceptable grey scale. This Warranty does not cover slight variations or gradations of color within the Product and/or face distortion. Normal behavior of the fiber and infill with respect to the wear pattern of a field is more fully explained in the "Field Settling" document, provided in the FieldTurf After-Sales Service Package and the PureSelect "*What to Look Out For*" Handout attached herein as **Appendix 1**.

FieldTurf disclaims all liability for incidental and consequential damages for breach of any express or implied warranty, including any implied warranty of merchantability, with respect to the Product. In the event that the Product be used for purposes other than the sporting activities provided herein or for any other uses for which FieldTurf has provided its written authorization, FieldTurf shall not be responsible for damages resulting therefrom and, therefore, this Warranty, as well as any and all applicable legal warranties, shall become **null and void** as Purchaser understands that FieldTurf has tested the Product for use in connection with the said sporting activities and/or uses, and that it may not have tested the Product for other such uses. Any Product repairs or replacements performed under the terms of this Warranty shall not extend the term of this Warranty.

Name of Purchaser:	**CLIENT NAME**	*Sporting Activities:*	Multi-Sport Use
Date of Completion:		*Installed by:*	FieldTurf USA, Inc.
Location:		*City:*	
Address:		*Zip:*	
State:		*Fax/email:*	
Tel:			
Signature:		*Name :*	Darren Gill
Date:		*Reference:*	8800

SAMPLE

This warranty is insured by a third party.
For more information please contact Customer Service at FieldTurf at the number listed below.
7445 Côte-de-Liesse Road Suite 200, Montreal, QC, Canada H4T 1G2 • Toll Free: 1-800-724-2969 •

FieldTurf
A Tarkett Sports Company

Manufacturer's Limited Warranty

Appendix 1

FieldTurf®
A Tarkett Sports Company

SUSTAIN THE GAME

PureSelect

WHAT TO LOOK OUT FOR

OUR SYSTEMS WITH PURESELECT INFILL REQUIRE THE CARE AND MAINTENANCE YOU WOULD EXPECT TO GIVE TO A SYNTHETIC TURF FIELD, BUT THERE ARE SOME SPECIFICS THAT YOU SHOULD B E AWARE OF:

THE FIRST MONTHS AFTER INSTALLATION

It will normally take several months for the infill to fully settle between the grass filaments and some 'static cling' of the natural infill to the synthetic turf fiber is normal. Regular maintenance should start immediately after the handover of the field.

REQUIRED MAINTENANCE

PureSelect typically requires additional attention and maintenance. Due to its specific weight, some of the infill material is more mobile, especially during extreme weather. Care should be taken to top up and brush as required. It is possible that the infill may displace during heavy rainfall, however it can be easily redistributed once the playing area has dried out. If infill becomes visible on the playing surface, sprinkling with water, or allowing the rain to fall, will settle the infill back into the system. PureSelect retains more water than rubber based infills. As a result, depending on the climate, the high moisture content could lend itself to being vulnerable to freezing due to ambient temperature changes. The maintenance activities of Brushing, Aerating, Raking, and Sweeping should be adhered to.

AESTHETICS

PureSelect is a natural material with a natural aesthetic and, over time, the look and shape of the infill granules will alter slightly. Typically, the granules will go darker in colour. This is completely normal and does not affect their performance or durability in any way.

NATURAL INFILLS CAN COOL

PureSelect acts as a cooling agent within a synthetic turf system – also adding an additional level of comfort during hot periods.

fieldturf.com

This warranty is insured by a third party.

For more information please contact Customer Service at FieldTurf at the number listed below.

7445 Côte-de-Liesse Road Suite 200, Montreal, QC, Canada H4T 1G2 • Toll Free: 1-800-724-2969 •

Manufacturer's Limited Warranty

Appendix 2

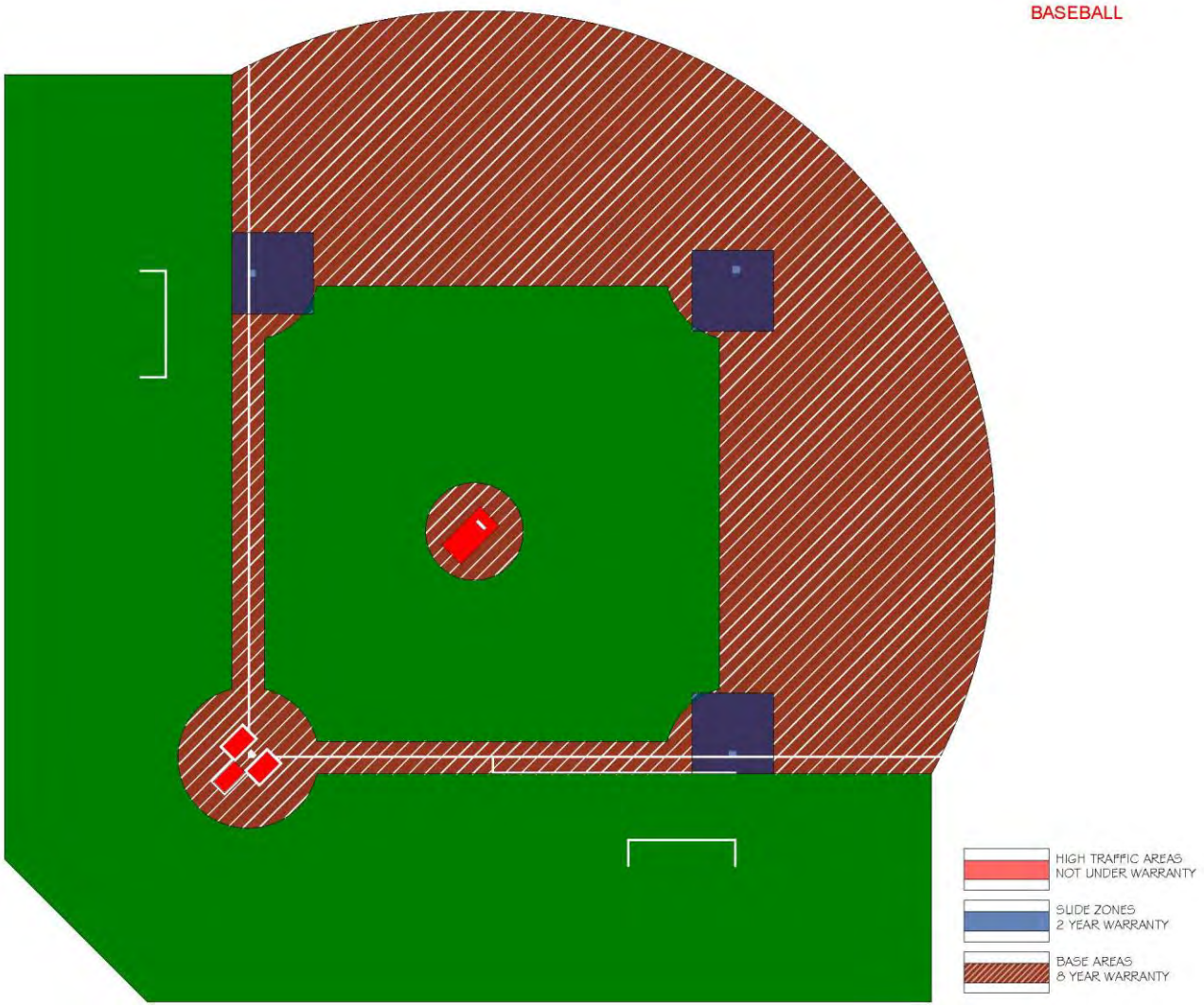

Manufacturer's Limited Warranty

Appendix 3

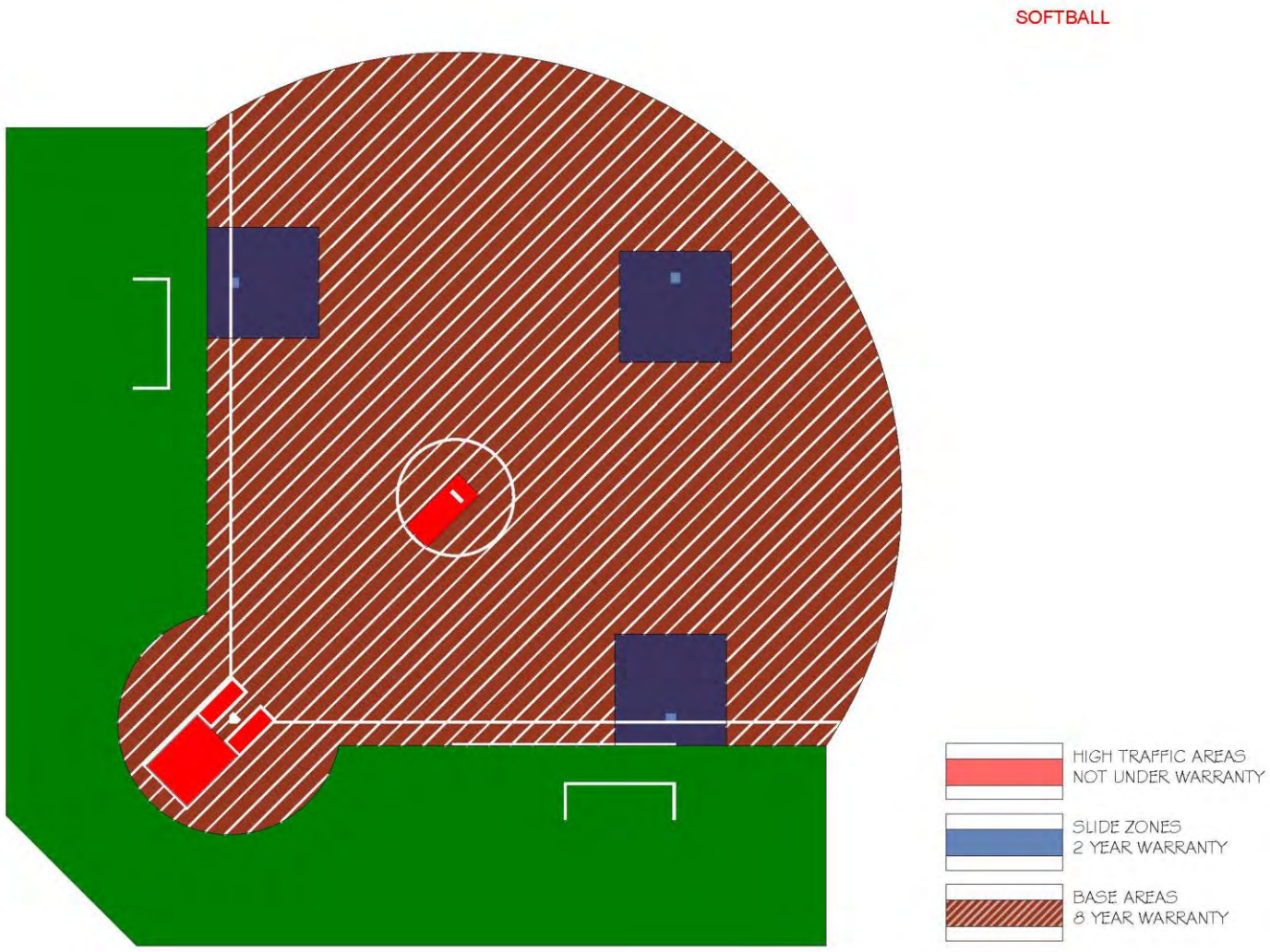

FieldTurf
A Tarkett Sports Company

Manufacturer's Limited Warranty

FieldTurf warrants that if **FieldTurf product code *PureSelect*** (Product) for multi-sport use synthetic turf proves to be defective in material or installation workmanship, therefore, resulting in premature wear, during normal and ordinary use of the Product for the sporting activities provided herein or for any other uses for which FieldTurf has provided its written authorization, within **eight (8) years** from the date of completion of installation as indicated in this Warranty, FieldTurf shall either repair or replace the affected area of the Product in accordance with the terms of this Warranty. FieldTurf's sole liability under this Warranty shall be limited to either repair or replacement of the affected area of the Product, at its sole discretion, and FieldTurf shall have no other obligations or liabilities with respect to defects of the Product. FieldTurf will, at FieldTurf's option, either repair or replace the affected area to the extent required to meet the Warranty period, but no cash refunds will be made**.** This Warranty shall commence upon the date of completion indicated in this Warranty. The accompanying Warranty service will not come into effect unless and until FieldTurf's Certificate of Completion is sent for validation to the corporate office of FieldTurf indicated herein within thirty (30) days of the date of completion or Purchaser's first use, whichever occurs first. In all cases, the Warranty shall be deemed to commence upon the date of completion indicated in this Warranty. The acceptance form of the terms and conditions contained in FieldTurf's Maintenance Guidelines must also be provided to FieldTurf's corporate office within thirty (30) days of completion of installation. This Warranty is limited to the remedies of repair or replacement, which shall constitute the exclusive remedies available under this Warranty; all other remedies or recourses which might otherwise be available are hereby waived by the Purchaser. FieldTurf will have no other obligations or liability for damages arising out of or in connection with the use or performance of the Product, including, but without limitation, damages for personal injury and/or economic losses. This Warranty shall not come into effect, and FieldTurf shall have no obligations under this Warranty, unless and until FieldTurf is paid in full for the Product to be warranted hereunder. **As concerns the designated high-traffic areas, which include, but are not limited to, the home plate, pitcher's mound, pitcher's lane, catcher's box, batting cage and bullpen areas, the foregoing Warranty does not apply. Notwithstanding anything contained herein, the base areas and slide zones, which also constitute as high traffic areas, shall be covered by this Warranty, except that the applicable Warranty period shall be limited to a two (2) year Manufacturer's Warranty (see Appendices 2 and 3).**

Field Markings: Baseball, Softball

Other Exclusions

EXCEPT AS EXPRESSLY SET FORTH IN THE MANUFACTURER'S LIMITED WARRANTY ABOVE, FIELDTURF DISCLAIMS ALL OTHER WARRANTIES OF ANY KIND, EXPRESS OR IMPLIED, IN FACT OR IN LAW, INCLUDING, BUT NOT LIMITED TO, THE IMPLIED WARRANTIES OF MERCHANTABILITY AND FITNESS FOR A PARTICULAR PURPOSE.

THIS WARRANTY SHALL BECOME NULL AND VOID IF THE PURCHASER FAILS TO MAINTAIN THE FIELD IN ACCORDANCE WITH THE FIELDTURF MAINTENANCE GUIDELINES AND SCHEDULE PROVIDED BY FIELDTURF THEREIN. ALL MAINTENANCE SHALL BE PERFORMED BY FIELDTURF-TRAINED AND/OR FIELDTURF-AUTHORIZED MAINTENANCE PERSONNEL ONLY.

Furthermore, this Manufacturer's Limited Warranty ***does not cover****:*

1. Any damage resulting, directly or indirectly, from force majeure, accident, misuse, intentional and unintentional abuse, infill displacement, neglect; or from usage, unintentional or otherwise, that cannot reasonably be considered as normal play or ordinary use of the Product. For purposes of this Warranty, normal play and ordinary use shall mean usage up to 3,000 hours per year of regular play and utilization for the sporting activities provided herein; normal play and ordinary use also includes a reasonable number of users or participants, but does not include repetitive marching, repetitive training or high-intensity drills on the same part of the field, especially in the areas of, but not limited to, home plate, pitcher's mound, base areas, base paths all of which require frequent maintenance in accordance with FieldTurf Maintenance Guidelines and may require regular replacement.

2. Damage resulting from failure to maintain the Product in accordance with FieldTurf's Maintenance Guidelines provided to the Purchaser. The Purchaser shall keep a log of all maintenance performed on the Product and supply FieldTurf with a copy upon request. Purchaser acknowledges that organic infill systems such as those in the *PureSelect* product require specialized maintenance and care and given the nature of FieldTurf's *PureSelect* product, this Warranty shall be conditioned upon the Purchaser carrying out regular *PureSelect*-specific field maintenance as specified in FieldTurf's applicable maintenance manuals/guidelines and upon maintaining written logs showing same. Purchaser understands the particular *PureSelect*

SAMPLE

Manufacturer's Limited Warranty

requirements for maintaining proper infill levels and agrees, as necessary, to undertake responsibility for infill replenishment and maintenance anywhere infill is naturally displaced. The Purchaser also acknowledges that the characteristics of the *PureSelect* materials may result in naturally occurring changes, including but not limited to, color and appearance of the materials within the infill layers; accordingly and without limitation, *PureSelect* is subject to a change in color which usually presents as a darker surface color, but which will not affect the performance of the field

3. Damage resulting from repair, attempted repair and/or maintenance by anyone other than FieldTurf, an authorized FieldTurf distributor or an authorized FieldTurf maintainer.
4. Damage due to causes which include, but are not limited to, the application of chemicals and/or cleaning agents, adhesive backing, dirt, traffic, negligence, vandalism, fire, flood, windstorm, animals, improper care and Acts of God.
5. Failure and/or improper design of the base; depression of the soil, subsurface or other matter upon which the base or Product rests; and any and all resulting damage to the Product arising therefrom.
6. FieldTurf does not warrant the percolation rate, long term planarity and/or compaction of the base which the product is installed. **FIELDTURF DISCLAIMS ALL WARRANTIES AS TO THE BASE, EXPRESS OR IMPLIED, AND ANY AND ALL RESULTING DAMAGE TO THE PRODUCT ARISING THEREFROM**.
7. Damage resulting from the use of improper footwear such as long-spiked track shoes, regular and repeated use of steel cleats, and flat-soled shoes. Standard molded soccer or football cleats are recommended.
8. Damage resulting from the inadequate installation, improper maintenance and/or other failure of any third-party shock pad or underlayment pad installed beneath the Product, including, but not limited to, detachment of the Product caused by expansion and/or contraction of the third party shock pad or underlayment pad.

All synthetic turf is subject to normal wear and tear, which does not constitute a manufacturing defect and is not covered by this Warranty. In addition to the other factors listed in this Warranty and without limitation, the extent of the wear and tear depends on the construction of synthetic turf (fiber face weight, stitch rate, fiber pile height and gauge, infill components and maintenance of the field) and the intensity of use of the synthetic turf. The synthetic turf will be stable to light fading with the maximum fading of the synthetic turf during the Warranty period not to exceed fifteen percent (15%) of color loss annually based upon an acceptable grey scale. This Warranty does not cover slight variations or gradations of color within the Product and/or face distortion. Normal behavior of the fiber and infill with respect to the wear pattern of a field is more fully explained in the "Field Settling" document, provided in the FieldTurf After-Sales Service Package and the PureSelect "*What to Look Out For*" Handout attached herein as **Appendix 1**.

FieldTurf disclaims all liability for incidental and consequential damages for breach of any express or implied warranty, including any implied warranty of merchantability, with respect to the Product. In the event that the Product be used for purposes other than the sporting activities provided herein or for any other uses for which FieldTurf has provided its written authorization, FieldTurf shall not be responsible for damages resulting therefrom and, therefore, this Warranty, as well as any and all applicable legal warranties, shall become **null and void** as Purchaser understands that FieldTurf has tested the Product for use in connection with the said sporting activities and/or uses, and that it may not have tested the Product for other such uses. Any Product repairs or replacements performed under the terms of this Warranty shall not extend the term of this Warranty.

Name of Purchaser:	**CLIENT NAME**	*Sporting Activities:*	Multi-Sport Use
Date of Completion:		*Installed by:*	FieldTurf USA, Inc.
Location:		*City:*	
Address:		*Zip:*	
State:		*Fax/email:*	
Tel:			
Signature:		*Name :*	Darren Gill
Date:		*Reference:*	8800

SAMPLE

FieldTurf
A Tarkett Sports Company

Manufacturer's Limited Warranty

Appendix 1

FieldTurf®
A Tarkett Sports Company

SUSTAIN THE GAME

PureSelect

WHAT TO LOOK OUT FOR

OUR SYSTEMS WITH PURESELECT INFILL REQUIRE THE CARE AND MAINTENANCE YOU WOULD EXPECT TO GIVE TO A SYNTHETIC TURF FIELD, BUT THERE ARE SOME SPECIFICS THAT YOU SHOULD B E AWARE OF:

THE FIRST MONTHS AFTER INSTALLATION

It will normally take several months for the infill to fully settle between the grass filaments and some 'static cling' of the natural infill to the synthetic turf fiber is normal. Regular maintenance should start immediately after the handover of the field.

REQUIRED MAINTENANCE

PureSelect typically requires additional attention and maintenance. Due to its specific weight, some of the infill material is more mobile, especially during extreme weather. Care should be taken to top up and brush as required. It is possible that the infill may displace during heavy rainfall, however it can be easily redistributed once the playing area has dried out. If infill becomes visible on the playing surface, sprinkling with water, or allowing the rain to fall, will settle the infill back into the system. PureSelect retains more water than rubber based infills. As a result, depending on the climate, the high moisture content could lend itself to being vulnerable to freezing due to ambient temperature changes. The maintenance activities of Brushing, Aerating, Raking, and Sweeping should be adhered to.

AESTHETICS

PureSelect is a natural material with a natural aesthetic and, over time, the look and shape of the infill granules will alter slightly. Typically, the granules will go darker in colour. This is completely normal and does not affect their performance or durability in any way.

NATURAL INFILLS CAN COOL

PureSelect acts as a cooling agent within a synthetic turf system – also adding an additional level of comfort during hot periods.

SAMPLE

This warranty is insured by a third party.

For more information please contact Customer Service at FieldTurf at the number listed below.

7445 Côte-de-Liesse Road Suite 200, Montreal, QC, Canada H4T 1G2 • Toll Free: 1-800-724-2969 •

Manufacturer's Limited Warranty

Appendix 2

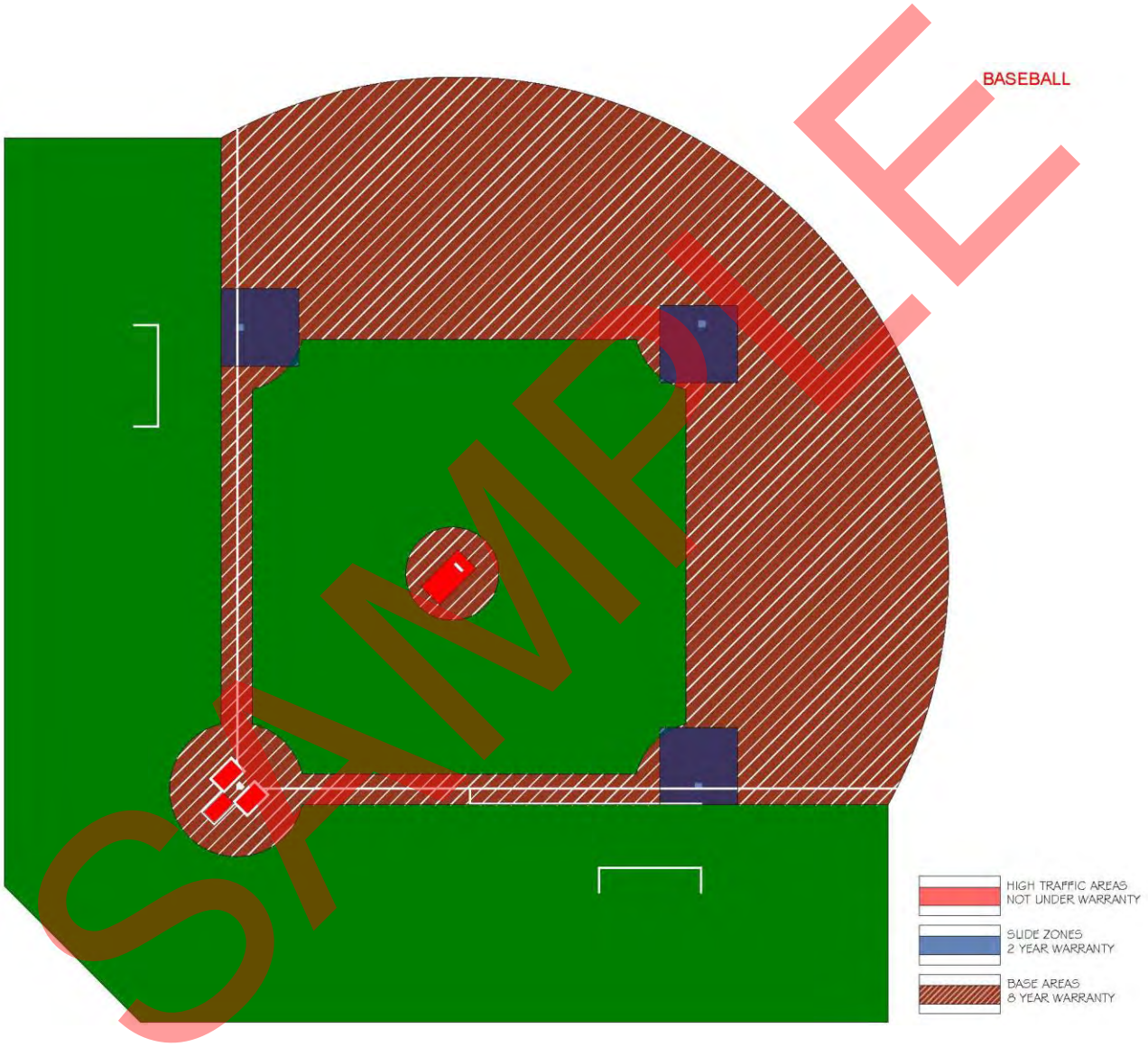

SAMPLE

This warranty is insured by a third party.

For more information please contact Customer Service at FieldTurf at the number listed below.

7445 Côte-de-Liesse Road Suite 200, Montreal, QC, Canada H4T 1G2 • Toll Free: 1-800-724-2969 •

Manufacturer's Limited Warranty

Appendix 3

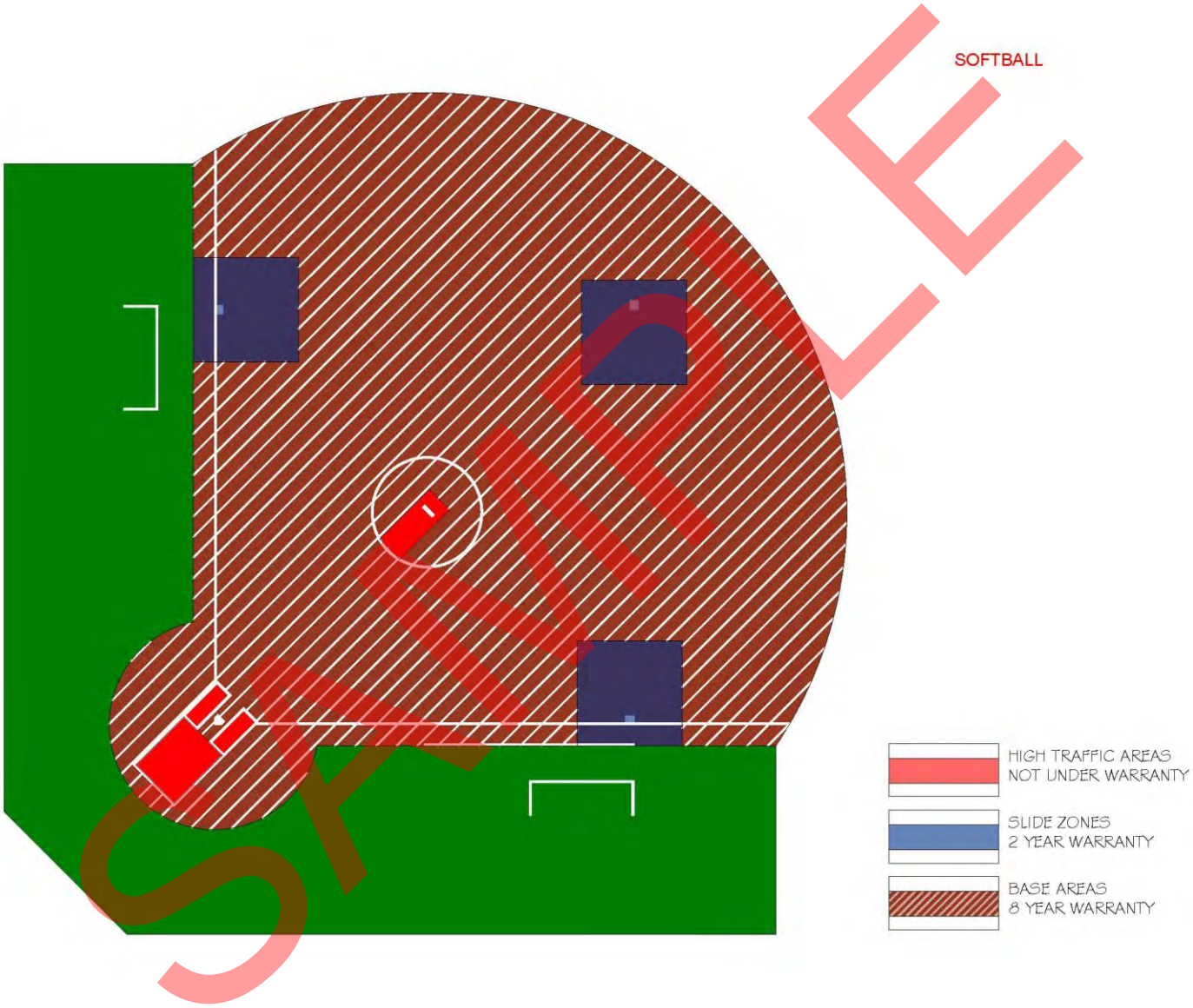

SAMPLE

This warranty is insured by a third party.

For more information please contact Customer Service at FieldTurf at the number listed below.

7445 Côte-de-Liesse Road Suite 200, Montreal, QC, Canada H4T 1G2 • Toll Free: 1-800-724-2969 •

FieldTurf
A Tarkett Sports Company

Manufacturer's Limited Warranty

FieldTurf warrants that if **FieldTurf product code** (Product) for multi-sport use synthetic turf proves to be defective in material or installation workmanship, therefore resulting in premature wear, during normal and ordinary use of the Product for the sporting activities provided herein or for any other uses for which FieldTurf has provided its written authorization, within **eight (8) years** from the date of completion of installation as indicated in this Warranty, FieldTurf shall either repair or replace the affected area of the Product in accordance with the terms of this Warranty. FieldTurf's sole liability under this Warranty shall be limited to either repair or replacement of the affected area of the Product, at its sole discretion, and FieldTurf shall have no other obligations or liabilities with respect to defects of the Product. FieldTurf will, at FieldTurf's option, either repair or replace the affected area to the extent required to meet the Warranty period, but no cash refunds will be made**.** This Warranty shall commence upon the date of completion indicated in this Warranty. The accompanying Warranty service will not come into effect unless and until FieldTurf's Certificate of Completion is sent for validation to the corporate office of FieldTurf indicated herein within thirty (30) days of the date of completion or Purchaser's first use, whichever occurs first. In all cases, the Warranty shall be deemed to commence upon the date of completion indicated in this Warranty. The acceptance form of the terms and conditions contained in FieldTurf's Maintenance Guidelines must also be provided to FieldTurf's corporate office within thirty (30) days of completion of installation. FieldTurf warrants that the G-max shall maintain a value (option 1: below one hundred thirty-five (135) at installation and no greater than one hundred eighty-five (185)) or option 2: (that shall not exceed two hundred (200)) for the duration of the warranty, as per ASTM 1936 and F-355 standards, providing that the customer has performed the regular maintenance as outlined in the maintenance guidelines. This Warranty is limited to the remedies of repair or replacement, which shall constitute the exclusive remedies available under this Warranty; all other remedies or recourses which might otherwise be available are hereby waived by the Purchaser. FieldTurf will have no other obligations or liability for damages arising out of or in connection with the use or performance of the Product, including, but without limitation, damages for personal injury and/or economic losses. This Warranty shall not come into effect, and FieldTurf shall have no obligations under this Warranty, unless and until FieldTurf is paid in full for the Product to be warranted hereunder. **As concerns the designated high-traffic areas, which include, but are not limited to, the home plate, pitcher's mound, pitcher's lane, catcher's box, batting cage and bullpen areas, the foregoing Warranty does not apply. Notwithstanding anything contained herein, the base areas and slide zones, which also constitute as high traffic areas, shall be covered by this Warranty, except that the applicable Warranty period shall be limited to a two (2) year Manufacturer's Warranty (see Appendices 1 and 2).**

Field Markings: Baseball
Other Exclusions

EXCEPT AS EXPRESSLY SET FORTH IN THE MANUFACTURER'S LIMITED WARRANTY ABOVE, FIELDTURF DISCLAIMS ALL OTHER WARRANTIES OF ANY KIND, EXPRESS OR IMPLIED, IN FACT OR IN LAW, INCLUDING, BUT NOT LIMITED TO, THE IMPLIED WARRANTIES OF MERCHANTABILITY AND FITNESS FOR A PARTICULAR PURPOSE.

THIS WARRANTY SHALL BECOME NULL AND VOID IF THE PURCHASER FAILS TO MAINTAIN THE FIELD IN ACCORDANCE WITH THE FIELDTURF MAINTENANCE GUIDELINES AND SCHEDULE PROVIDED BY FIELDTURF THEREIN. ALL MAINTENANCE SHALL BE PERFORMED BY FIELDTURF-TRAINED AND/OR FIELDTURF-AUTHORIZED MAINTENANCE PERSONNEL ONLY.

Furthermore, this Manufacturer's Limited Warranty ***does not cover****:*

1. Any damage resulting, directly or indirectly, from *force majeure*, accident, misuse, intentional and unintentional abuse, infill displacement, neglect; or from usage, unintentional or otherwise, that cannot reasonably be considered as normal play or ordinary use of the Product. For purposes of this Warranty, normal play and ordinary use shall mean usage up to 3,000 hours per year of regular play and utilization for the sporting activities provided herein; normal play and ordinary use also includes a reasonable number of users or participants, but does not include repetitive marching, repetitive training or high-intensity drills on the same part of the field, especially in the areas of, but not limited to, home plate, pitcher's mound, base areas, base paths all of which require frequent maintenance in accordance with FieldTurf Maintenance Guidelines and may require regular replacement.
2. Damage resulting from failure to maintain the Product in accordance with FieldTurf's Maintenance Guidelines provided to the Purchaser, including without limitation, the baseball specific maintenance and use instructions. Given the nature of baseball, this warranty shall be conditional upon the Purchaser

SAMPLE

Manufacturer's Limited Warranty

carrying out regular baseball specific field maintenance as specified in FieldTurf's applicable maintenance manuals/guidelines and maintaining written logs showing same. The Purchaser understands the particular baseball requirement for frequent in-fill replenishment and maintenance on bases, base paths and anywhere else in-fill is naturally displaced.

3. Damage resulting from repair, attempted repair and/or maintenance by anyone other than FieldTurf, an authorized FieldTurf distributor or an authorized FieldTurf maintainer.

4. Damage due to causes which include, but are not limited to, the application of chemicals and/or cleaning agents, adhesive backing, dirt, traffic, negligence, vandalism, fire, flood, windstorm, animals, improper care and Acts of God.

5. Failure and/or improper design of the base; depression of the soil, subsurface or other matter upon which the base or Product rests; and any and all resulting damage to the Product arising therefrom.

6. FieldTurf does not warrant the percolation rate, long term planarity and/or compaction of the base which the product is installed. **FIELDTURF DISCLAIMS ALL WARRANTIES AS TO THE BASE, EXPRESS OR IMPLIED, AND ANY AND ALL RESULTING DAMAGE TO THE PRODUCT ARISING THEREFROM**.

7. Damage resulting from the use of improper footwear such as long-spiked track shoes, regular and repeated use of steel cleats, and flat-soled shoes. Standard molded soccer or football cleats are recommended.

8. Damage resulting from the inadequate installation, improper maintenance and/or other failure of any third party shock pad or underlayment pad installed beneath the Product, including, but not limited to, detachment of the Product caused by expansion and/or contraction of the third party shock pad or underlayment pad.

All synthetic turf is subject to normal wear and tear, which does not constitute a manufacturing defect and is not covered by this Warranty. In addition to the other factors listed in this Warranty and without limitation, the extent of the wear and tear depends on the construction of synthetic turf (fiber face weight, stitch rate, fiber pile height and gauge, infill components and maintenance of the field) and the intensity of use of the synthetic turf. The Product will be stable to light fading with the maximum fading of the Product during the Warranty period not to exceed fifteen percent (15%) of color loss annually based upon an acceptable grey scale. This Warranty does not cover slight variations or gradations of color within the Product and/or face distortion. Normal behavior of the fiber and infill with respect to the wear pattern of a field is more fully explained in the "Field Settling" document, provided in the FieldTurf After-Sales Service Package.

FieldTurf disclaims all liability for incidental and consequential damages for breach of any express or implied warranty, including any implied warranty of merchantability, with respect to the Product. In the event that the Product be used for purposes other than the sporting activities provided herein or for any other uses for which FieldTurf has provided its written authorization, FieldTurf shall not be responsible for damages resulting therefrom and, therefore, this Warranty, as well as any and all applicable legal warranties, shall become **null and void** as Purchaser understands that FieldTurf has tested the Product for use in connection with the said sporting activities and/or uses, and that it may not have tested the Product for other such uses. Any Product repairs or replacements performed under the terms of this Warranty shall not extend nor reset the term of this Warranty or any applicable warranty on workmanship and installation.

Name of Purchaser:		*Sporting Activities:*	Multi-Sport Use
Date of Completion:		*Installed by:*	FieldTurf USA, Inc.
Location:		*City:*	
Address:		*Zip:*	
State:		*Fax/email:*	
Tel:			
Signature:		*Name :*	
Date:		*Reference:*	

SAMPLE

Manufacturer's Limited Warranty

Appendix 1

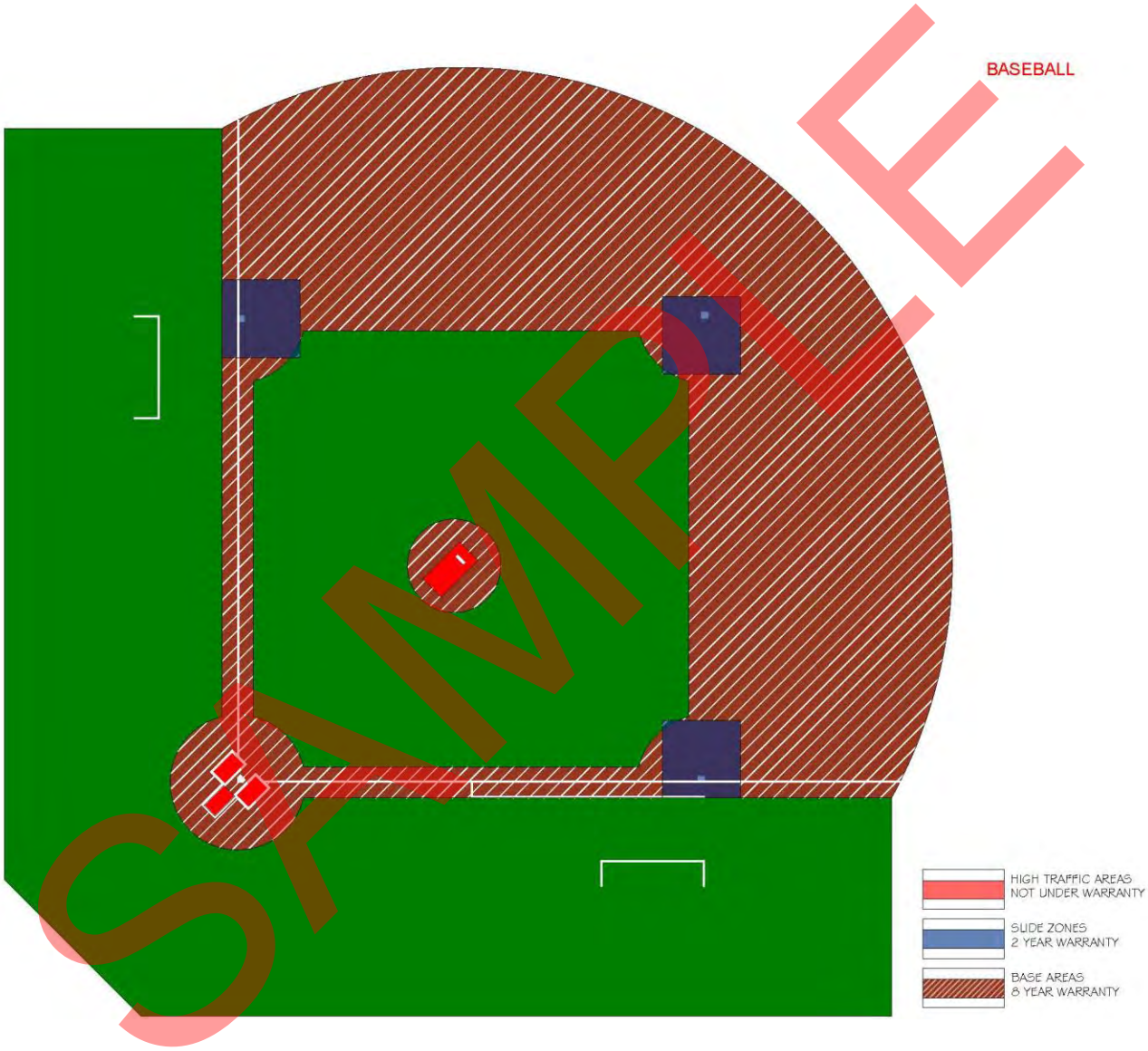

SAMPLE

This warranty is insured by a third party.

For more information please contact Customer Service at FieldTurf at the number listed below.

7445 Côte-de-Liesse Road Suite 200, Montreal, QC, Canada H4T 1G2 • Toll Free: 1-800-724-2969 •

FieldTurf
A Tarkett Sports Company

Manufacturer's Limited Warranty

Appendix 2

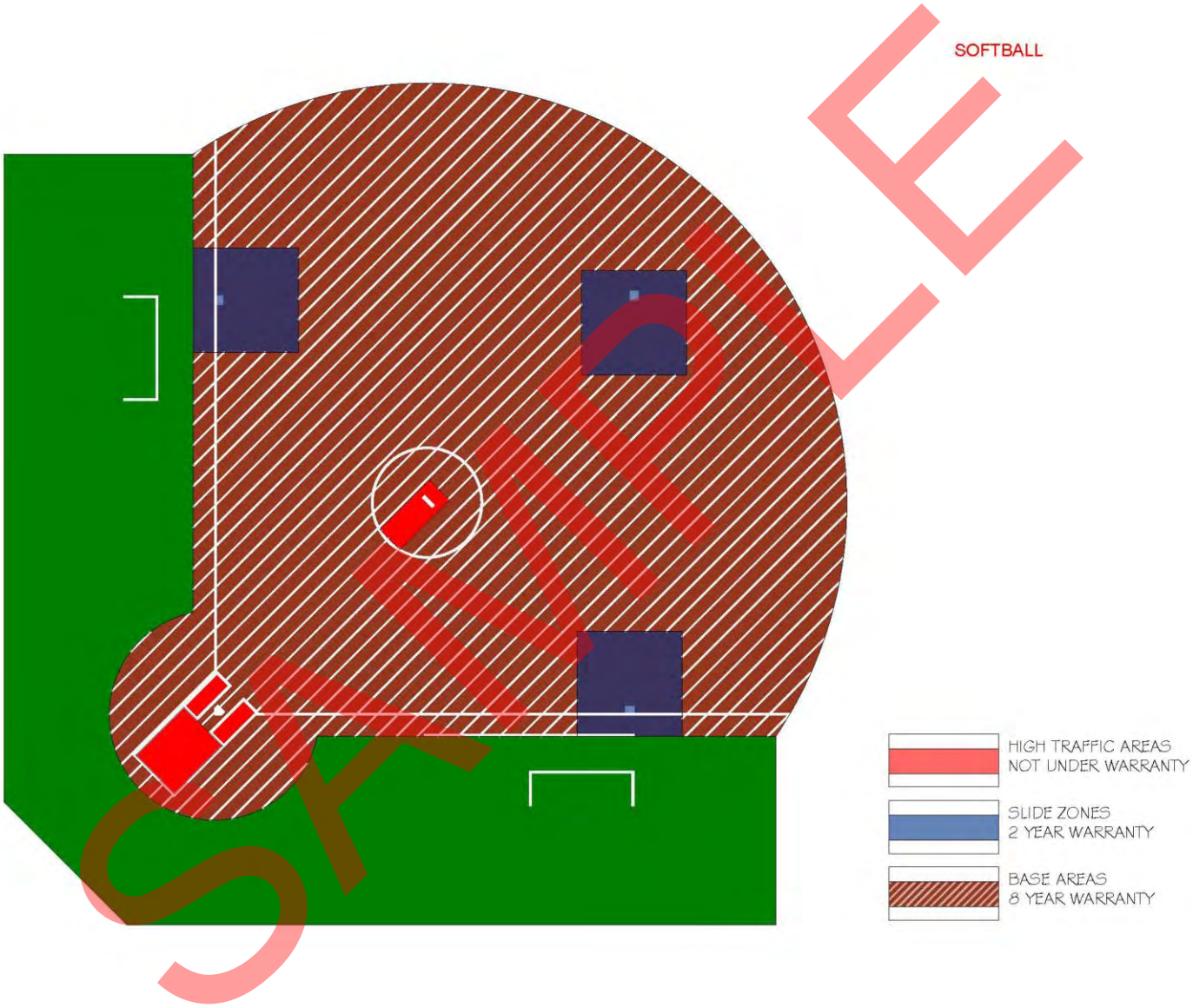

SAMPLE

FieldTurf
A Tarkett Sports Company

Manufacturer's Limited Warranty

FieldTurf warrants that if **FieldTurf** Product (Product) for multi-sport use synthetic turf proves to be defective in material or installation workmanship, therefore resulting in premature wear, during normal and ordinary use of the Product for the sporting activities provided herein or for any other uses for which FieldTurf has provided its written authorization, within **eight (8) years** from the date of completion of installation as indicated in this Warranty, FieldTurf shall either repair or replace the affected area of the Product in accordance with the terms of this Warranty. FieldTurf's sole liability under this Warranty shall be limited to either repair or replacement of the affected area of the Product, at its sole discretion, and FieldTurf shall have no other obligations or liabilities with respect to defects of the Product. FieldTurf will, at FieldTurf's option, either repair or replace the affected area to the extent required to meet the Warranty period, but no cash refunds will be made. This Warranty shall commence upon the date of completion indicated in this Warranty. The accompanying Warranty service will not come into effect unless and until FieldTurf's Certificate of Completion is sent for validation to the corporate office of FieldTurf indicated herein within thirty (30) days of the date of completion or Purchaser's first use, whichever occurs first. In all cases, the Warranty shall be deemed to commence upon the date of completion indicated in this Warranty. This Warranty is limited to the remedies of repair or replacement, which shall constitute the exclusive remedies available under this Warranty; all other remedies or recourses which might otherwise be available are hereby waived by the Purchaser. FieldTurf will have no other obligations or liability for damages arising out of or in connection with the use or performance of the Product, including, but without limitation, damages for personal injury and/or economic losses. This Warranty shall not come into effect, and FieldTurf shall have no obligations under this Warranty, unless and until FieldTurf is paid in full for the Product to be warranted hereunder. **As concerns the designated high-traffic areas, which include, but are not limited to, the home plate, pitcher's mound, pitcher's lane, catcher's box, batting cage and bullpen areas, the foregoing Warranty does not apply. Notwithstanding anything contained herein, the base areas and slide zones, which also constitute as high traffic areas, shall be covered by this Warranty, except that the applicable Warranty period shall be limited to a two (2) year Manufacturer's Warranty (see Appendices 1 and 2).**

Field Markings: Baseball

Other Exclusions

EXCEPT AS EXPRESSLY SET FORTH IN THE MANUFACTURER'S LIMITED WARRANTY ABOVE, FIELDTURF DISCLAIMS ALL OTHER WARRANTIES OF ANY KIND, EXPRESS OR IMPLIED, IN FACT OR IN LAW, INCLUDING, BUT NOT LIMITED TO, THE IMPLIED WARRANTIES OF MERCHANTABILITY AND FITNESS FOR A PARTICULAR PURPOSE.

THIS WARRANTY SHALL BECOME NULL AND VOID IF THE PURCHASER FAILS TO MAINTAIN THE FIELD IN ACCORDANCE WITH THE FIELDTURF MAINTENANCE GUIDELINES AND SCHEDULE PROVIDED BY FIELDTURF THEREIN. ALL MAINTENANCE SHALL BE PERFORMED BY FIELDTURF-TRAINED AND/OR FIELDTURF-AUTHORIZED MAINTENANCE PERSONNEL ONLY.

Furthermore, this Manufacturer's Limited Warranty ***does not cover***:

1. Any damage resulting, directly or indirectly, from *force majeure*, accident, misuse, intentional and unintentional abuse, infill displacement, neglect; or from usage, unintentional or otherwise, that cannot reasonably be considered as normal play or ordinary use of the Product. For purposes of this Warranty, normal play and ordinary use shall mean usage up to 3,000 hours per year of regular play and utilization for the sporting activities provided herein; normal play and ordinary use also includes a reasonable number of users or participants, but does not include repetitive marching, repetitive training or high-intensity drills on the same part of the field, especially in the areas of, but not limited to, home plate, pitcher's mound, base areas, base paths all of which require frequent maintenance in accordance with FieldTurf Maintenance Guidelines and may require regular replacement.
2. Damage resulting from failure to maintain the Product in accordance with FieldTurf's Maintenance Guidelines provided to the Purchaser, including without limitation, the baseball specific maintenance and use instructions. Given the nature of baseball, this warranty shall be conditional upon the Purchaser carrying out regular baseball specific field maintenance as specified in FieldTurf's applicable maintenance manuals/guidelines and maintaining written logs showing same. The Purchaser understands the particular baseball requirement for frequent in-fill replenishment and maintenance on bases, base paths and anywhere else in-fill is naturally displaced.

SAMPLE

FieldTurf
A Tarkett Sports Company

Manufacturer's Limited Warranty

3. Damage resulting from repair, attempted repair and/or maintenance by anyone other than FieldTurf, an authorized FieldTurf distributor or an authorized FieldTurf maintainer.
4. Damage due to causes which include, but are not limited to, the application of chemicals and/or cleaning agents, adhesive backing, dirt, traffic, negligence, vandalism, fire, flood, windstorm, animals, improper care and Acts of God.
5. Failure and/or improper design of the base; depression of the soil, subsurface or other matter upon which the base or Product rests; and any and all resulting damage to the Product arising therefrom.
6. FieldTurf does not warrant the percolation rate, long term planarity and/or compaction of the base which the product is installed. **FIELDTURF DISCLAIMS ALL WARRANTIES AS TO THE BASE, EXPRESS OR IMPLIED, AND ANY AND ALL RESULTING DAMAGE TO THE PRODUCT ARISING THEREFROM**.
7. Damage resulting from the use of improper footwear such as long-spiked track shoes, regular and repeated use of steel cleats, and flat-soled shoes. Standard molded soccer or football cleats are recommended.
8. Damage resulting from the inadequate installation, improper maintenance and/or other failure of any third party shock pad or underlayment pad installed beneath the Product, including, but not limited to, detachment of the Product caused by expansion and/or contraction of the third party shock pad or underlayment pad.

All synthetic turf is subject to normal wear and tear, which does not constitute a manufacturing defect and is not covered by this Warranty. In addition to the other factors listed in this Warranty and without limitation, the extent of the wear and tear depends on the construction of synthetic turf (fiber face weight, stitch rate, fiber pile height and gauge, infill components and maintenance of the field) and the intensity of use of the synthetic turf. The Product will be stable to light fading with the maximum fading of the Product during the Warranty period not to exceed fifteen percent (15%) of color loss annually based upon an acceptable grey scale. This Warranty does not cover slight variations or gradations of color within the Product and/or face distortion. Normal behavior of the fiber and infill with respect to the wear pattern of a field is more fully explained in the "Field Settling" document, provided in the FieldTurf After-Sales Service Package.

FieldTurf disclaims all liability for incidental and consequential damages for breach of any express or implied warranty, including any implied warranty of merchantability, with respect to the Product. In the event that the Product be used for purposes other than the sporting activities provided herein or for any other uses for which FieldTurf has provided its written authorization, FieldTurf shall not be responsible for damages resulting therefrom and, therefore, this Warranty, as well as any and all applicable legal warranties, shall become **null and void** as Purchaser understands that FieldTurf has tested the Product for use in connection with the said sporting activities and/or uses, and that it may not have tested the Product for other such uses. Any Product repairs or replacements performed under the terms of this Warranty shall not extend nor reset the term of this Warranty or any applicable warranty on workmanship and installation.

Name of Purchaser:		*Sporting Activities:*	Multi-Sport Use
Date of Completion:		*Installed by:*	FieldTurf USA, Inc.
Location:		*City:*	
Address:		*Zip:*	
State:		*Fax/email:*	
Tel:			
Signature:		*Name :*	
Date:		*Reference:*	

SAMPLE

This warranty is insured by a third party.
For more information please contact Customer Service at FieldTurf at the number listed below.
7445 Côte-de-Liesse Road Suite 200, Montreal, QC, Canada H4T 1G2 • Toll Free: 1-800-724-2969 •

FieldTurf
A Tarkett Sports Company

Manufacturer's Limited Warranty

Appendix 1

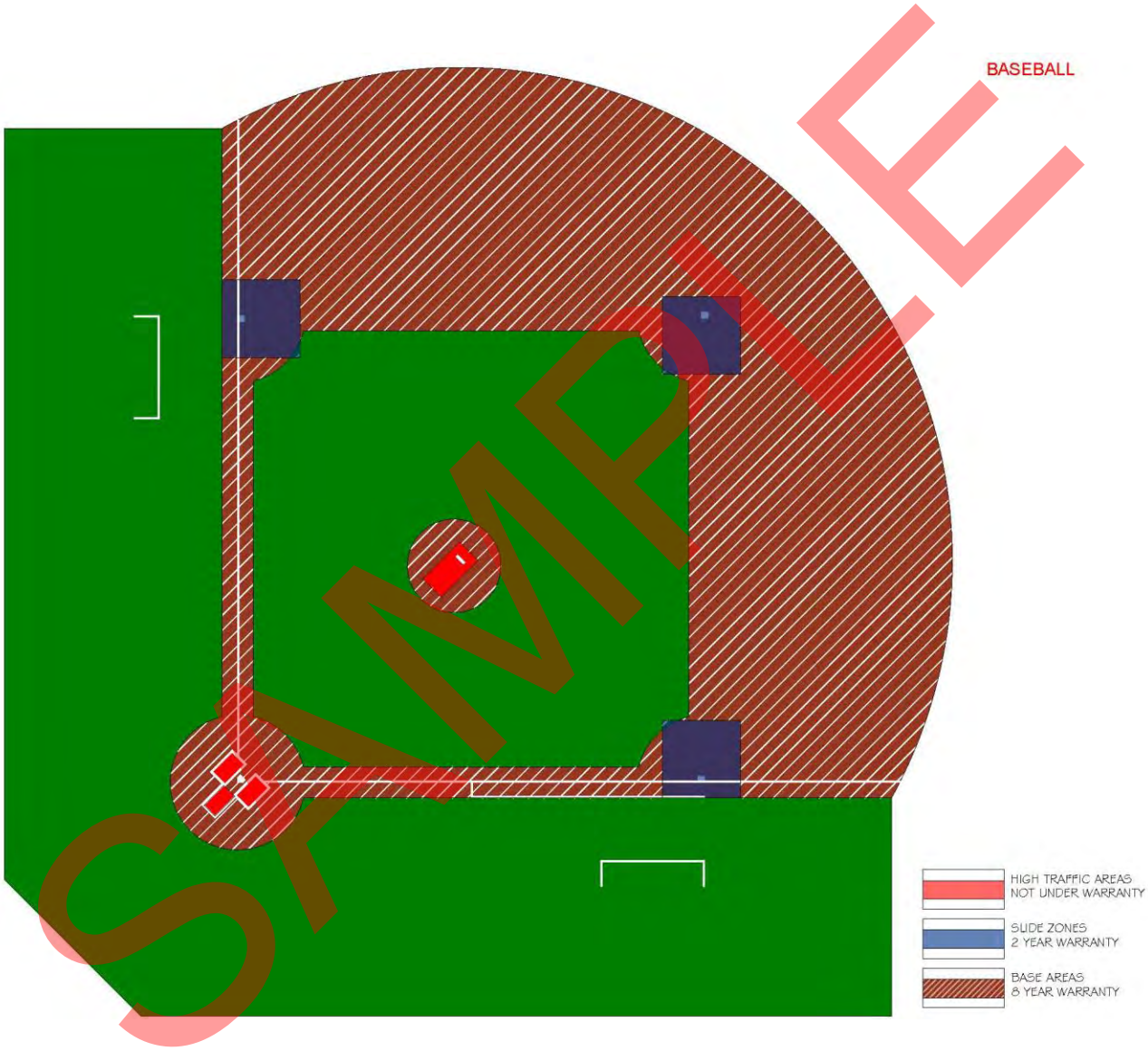

SAMPLE

This warranty is insured by a third party.
For more information please contact Customer Service at FieldTurf at the number listed below.
7445 Côte-de-Liesse Road Suite 200, Montreal, QC, Canada H4T 1G2 • Toll Free: 1-800-724-2969 •

FieldTurf
A Tarkett Sports Company

Manufacturer's Limited Warranty

Appendix 2

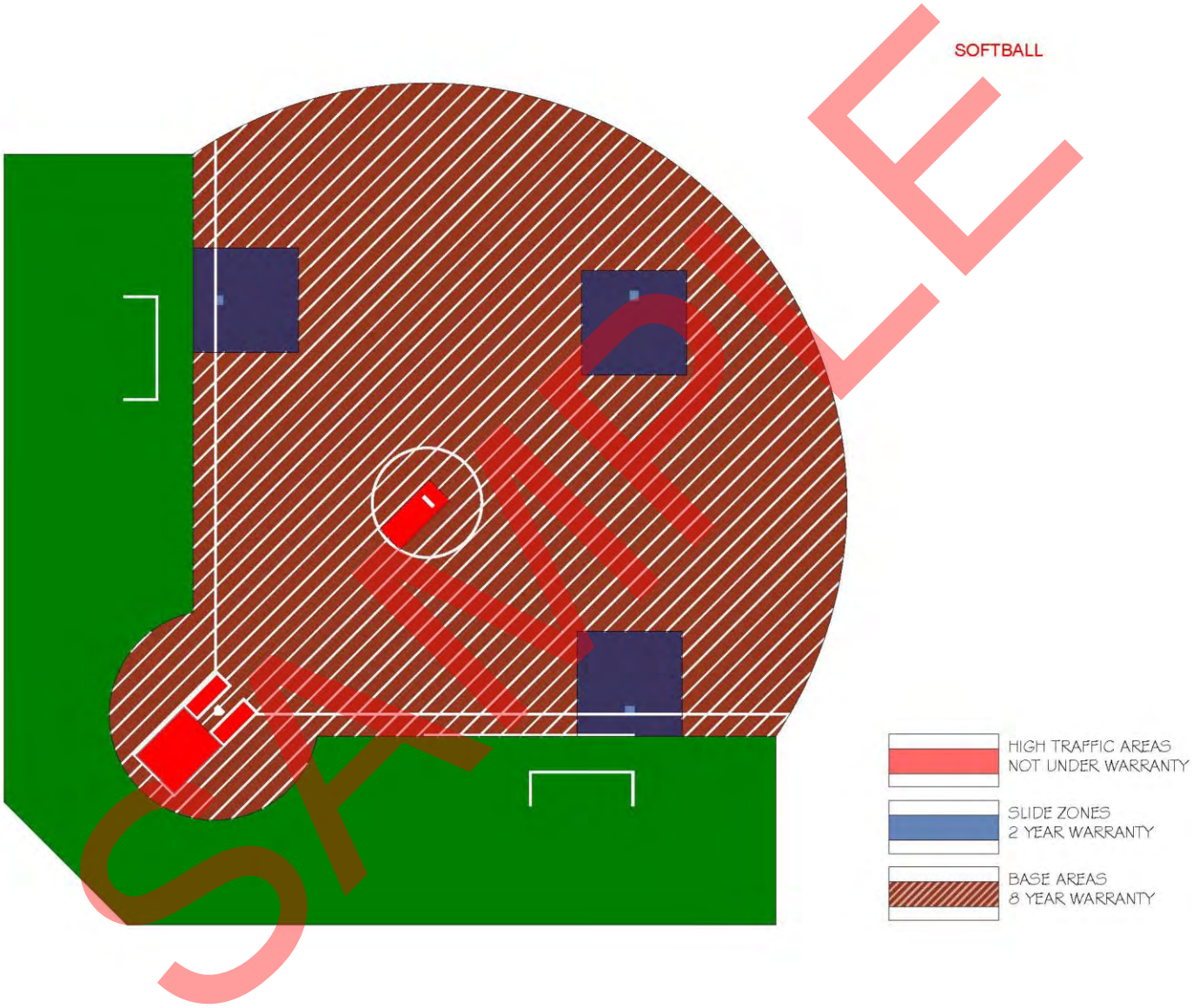

SAMPLE

FieldTurf
A Tarkett Sports Company

Manufacturer's Limited Warranty

FieldTurf warrants that if the **FieldTurf EasyField** ("Product") for multi-sport use synthetic turf proves to be defective in material or initial installation workmanship, resulting in premature wear, during normal and ordinary use of the Product for the sporting activities provided herein, or for any other uses for which FieldTurf provides its written authorization, within **one (1) year** from the Date of Purchase (as indicated in this Warranty), FieldTurf shall either repair or replace the affected area of the Product in accordance with the terms of this Warranty. FieldTurf's sole liability under this Warranty shall be limited to either repair or replacement of the affected area of the Product, at its sole discretion, and FieldTurf shall have no other obligations or liabilities with respect to defects of the Product. FieldTurf will, at FieldTurf's option, either repair or replace the affected area to the extent required to meet the Warranty period, but no cash refunds will be made**.** This Warranty shall commence upon the Date of Purchase indicated in this Warranty. This Warranty is limited to the remedies of repair or replacement, which shall constitute the exclusive remedies available under this Warranty; all other remedies or recourse which might otherwise be available are hereby waived by the Purchaser. FieldTurf will have no other obligations or liability for damages arising out of or in connection with the use or performance of the Product, including, without limitation, damages for personal injury, economic losses and/or damages related to base/subgrade, utilities, business interruption, lost revenue, increased costs, and downtime costs. In no event shall FieldTurf be liable for indirect, special, consequential and/or incidental damages of any kind, no matter what the cause. This Warranty shall not come into effect, and FieldTurf shall have no obligations under this Warranty, unless and until FieldTurf is paid in full for the Product to be warranted hereunder.

Any modification to the Product may void this warranty. Should the Product be discontinued, FieldTurf will replace the defective material with a FieldTurf product of equal value. Any product repairs or replacements performed under the terms of this warranty shall not lead to any extension whatsoever of the warranty period. This warranty is exclusive to the original purchaser, is not transferable, and in lieu of all other warranties, expressed or implied, and all other remedies, guarantees and/or liabilities arising by law or otherwise.

Other Exclusions

EXCEPT AS EXPRESSLY SET FORTH IN THE MANUFACTURER'S LIMITED WARRANTY ABOVE, FIELDTURF DISCLAIMS ALL OTHER WARRANTIES OF ANY KIND, EXPRESS OR IMPLIED, IN FACT OR IN LAW, INCLUDING, BUT NOT LIMITED TO, THE IMPLIED WARRANTIES OF MERCHANTABILITY AND FITNESS FOR A PARTICULAR PURPOSE.

THIS WARRANTY SHALL BECOME NULL AND VOID IF (A) THE PURCHASER FAILS TO MAINTAIN THE FIELD IN ACCORDANCE WITH THE FIELDTURF MAINTENANCE GUIDELINES AND SCHEDULE PROVIDED BY FIELDTURF THEREIN AND/OR (B) THE PURCHASER FAILS TO INSTALL, REMOVE AND/OR RE-INSTALL THE PRODUCT IN ACCORDANCE WITH FIELDTURF'S RECOMMENDED INSTALLATION PROCEDURES.

Furthermore, this Manufacturer's Limited Warranty ***does not cover:***

1. Any part of the installation procedure by the Purchaser and/or end user. FieldTurf is not responsible for any labor costs incurred for installation of the Product. This warranty does not cover damage caused by improper installation, negligence, water intrusion and/or flooding, abrasion, extreme heat, impact, cutting, freight damage, alteration, or any wear or damage caused by Acts of God.
2. Damage resulting from accident, *force majeure*, misuse, intentional and unintentional abuse, and neglect or from other than normal play and ordinary use of the Product. For purposes of this Warranty, normal play and ordinary use shall mean usage up to 3,000 hours per year of regular play and utilization for the sporting activities provided herein; normal play and ordinary use also includes a reasonable number of users or participants, but does not include repetitive marching, repetitive training or high-intensity drills on the same part of the field, especially in the areas of, but not limited to, home plate, pitcher's mound, base areas, base paths, soccer penalty mark/spot areas, goal areas, sideline areas and lacrosse crease areas, all of which require frequent maintenance in accordance with FieldTurf Maintenance Guidelines and may require regular replacement.
3. Damage resulting from failure to maintain the Product in accordance with FieldTurf's Maintenance Guidelines provided to the Purchaser, a copy of which has been made available to Purchaser. Purchaser shall keep a log of all maintenance performed on the Product and supply FieldTurf with a copy upon request.
4. Damage resulting from the Purchaser's failure to install, remove and/or re-install the Product in accordance with FieldTurf's Recommended Installation Procedures, a copy of which has been made available to Purchaser. Purchaser shall limit Product conversions, including installation, removal and re-installation to a reasonable and suitable number of conversions, in the sole discretion of FieldTurf, as the failure of Purchaser to limit all such Product

SAMPLE

FieldTurf
A Tarkett Sports Company

Manufacturer's Limited Warranty

conversions to a reasonable and suitable number may cause damage to the Product, which is not covered under this Warranty. Purchaser shall keep a log of all Product conversions.

5. Damage resulting from repair, attempted repair and/or maintenance by anyone other than FieldTurf or an authorized FieldTurf distributor or authorized FieldTurf maintainer.
6. Damage due to causes which include, but are not limited to, the application of chemicals and/or cleaning agents, adhesive backing, dirt, traffic, negligence, vandalism, fire, flood, windstorm, animals, improper care and Acts of God.
7. Failure and/or improper design of the base; depression of the soil, subsurface or other matter upon which the base or Product rests; and any and all resulting damage to the Product arising therefrom.
8. FieldTurf does not warrant the percolation rate, long term planarity and/or compaction of the base which the product is installed. **FIELDTURF DISCLAIMS ALL WARRANTIES AS TO THE BASE, EXPRESS OR IMPLIED, AND ANY AND ALL RESULTING DAMAGE TO THE PRODUCT ARISING THEREFROM**.
9. Damage resulting from the use of improper footwear such as long-spiked track shoes, regular and repeated use of steel cleats, and flat-soled shoes. Standard molded soccer or football cleats are recommended.
10. Damage resulting from the inadequate installation, improper maintenance and/or other failure of any third party shock pad or underlayment pad installed beneath the Product, including, but not limited to, detachment of the Product caused by expansion and/or contraction of the third party shock pad or underlayment pad.
11. Any additional warranties and/or promises offered by a third party. No unauthorized person, fabricator, installer, agent or employee of FieldTurf is entitled to assume any liability on behalf of FieldTurf relating to the sale of the Product or has the authority to increase or alter the obligations or limitations of this warranty.

All synthetic turf is subject to normal wear and tear, which is not a manufacturing defect and is not covered by this Warranty. In addition to the other factors listed in this Warranty, wear and tear depends on, without limitation, the construction of synthetic turf (fiber face weight, stitch rate, fiber pile height and gauge, and maintenance of the field) and the intensity of use of the synthetic turf. The Product will be stable to light fading with the maximum fading of the Product during the Warranty period not to exceed fifteen percent (15%) of color loss annually based upon an acceptable grey scale. This Warranty does not cover slight variations or gradations of color within the Product and/or face distortion.

FieldTurf disclaims all liability for incidental and consequential damages for breach of any express or implied warranty, including any implied warranty of merchantability, with respect to the Product. In the event that the Product is used for purposes other than the sporting activities provided herein or any other uses for which FieldTurf gives its written authorization, it being understood that FieldTurf has tested the Product for use in connection with these sporting activities and may not have tested it for other uses, FieldTurf shall not be responsible for any and all damages incurred and the Manufacturer's Limited Warranty, as well as all legal warranties, shall become null and void. Any Product repairs or replacements performed under the terms of this Warranty shall not extend the term of this Warranty.

Name of Purchaser:	**CLIENT NAME**	*Sporting Activities:*	Multi-Sport Use
Date of Completion:		*Installed by:*	FieldTurf USA, Inc.
Location:		*City:*	
Address:		*Zip:*	
State:		*Fax/email:*	
Tel:			
Signature:		*Name :*	
Date:		*Reference:*	8800

Disclaimer. The information in this document is subject to change without notice and should not be construed as a commitment by FieldTurf USA, Inc. FieldTurf assumes no responsibility for any errors that may appear in this document.

SAMPLE

This warranty is insured by a third party.

For more information please contact Customer Service at FieldTurf at the number listed below.
7445 Côte-de-Liesse Road Suite 200, Montreal, QC, Canada H4T 1G2 • Toll Free: 1-800-724-2969 •

FieldTurf
A Tarkett Sports Company

Manufacturer's Limited Warranty

FieldTurf warrants that if **FieldTurf product code *PureCob*** (Product) for multi-sport use synthetic turf proves to be defective in material or installation workmanship, therefore, resulting in premature wear, during normal and ordinary use of the Product for the sporting activities provided herein or for any other uses for which FieldTurf has provided its written authorization, within **eight (8) years** from the date of completion of installation as indicated in this Warranty, FieldTurf shall either repair or replace the affected area of the Product in accordance with the terms of this Warranty. FieldTurf's sole liability under this Warranty shall be limited to either repair or replacement of the affected area of the Product, at its sole discretion, and FieldTurf shall have no other obligations or liabilities with respect to defects of the Product. FieldTurf will, at FieldTurf's option, either repair or replace the affected area to the extent required to meet the Warranty period, but no cash refunds will be made**.** FieldTurf warrants that all materials installed meet or exceed the product specifications and further warrants that replacement material will be available through the Warranty period. FieldTurf will verify that their representative has inspected the installation and that the work conforms to FieldTurf's requirements and further warrants that the installation was done in accordance with both FieldTurf's recommendations and any written directives of FieldTurf's representative. This Warranty shall commence upon the date of completion indicated in this Warranty. The accompanying Warranty service will not come into effect unless and until FieldTurf's Certificate of Completion is sent for validation to the corporate office of FieldTurf indicated herein within thirty (30) days of the date of completion or Purchaser's first use, whichever occurs first. In all cases, the Warranty shall be deemed to commence upon the date of completion indicated in this Warranty. The acceptance form of the terms and conditions contained in FieldTurf's Maintenance Guidelines must also be provided to FieldTurf's corporate office within thirty (30) days of completion of installation. FieldTurf warrants that the G-max shall maintain a value (option 1: below one hundred thirty-five (135) at installation and no greater than one hundred eight-five (185)) or option 2: (that shall not exceed two hundred (200)) for the duration of the warranty, as per ASTM 1936 and F-355 standards, providing that the customer has performed the regular maintenance as outlined in the maintenance guidelines. This Warranty is limited to the remedies of repair or replacement, which shall constitute the exclusive remedies available under this Warranty; all other remedies or recourses which might otherwise be available are hereby waived by the Purchaser. FieldTurf will have no other obligations or liability for damages arising out of or in connection with the use or performance of the Product, including, but without limitation, damages for personal injury and/or economic losses. This Warranty shall not come into effect, and FieldTurf shall have no obligations under this Warranty, unless and until FieldTurf is paid in full for the Product to be warranted hereunder.

Field Markings: Football, Soccer

Other Exclusions

EXCEPT AS EXPRESSLY SET FORTH IN THE MANUFACTURER'S LIMITED WARRANTY ABOVE, FIELDTURF DISCLAIMS ALL OTHER WARRANTIES OF ANY KIND, EXPRESS OR IMPLIED, IN FACT OR IN LAW, INCLUDING, BUT NOT LIMITED TO, THE IMPLIED WARRANTIES OF MERCHANTABILITY AND FITNESS FOR A PARTICULAR PURPOSE.

THIS WARRANTY SHALL BECOME NULL AND VOID IF THE PURCHASER FAILS TO MAINTAIN THE FIELD IN ACCORDANCE WITH THE FIELDTURF MAINTENANCE GUIDELINES AND SCHEDULE PROVIDED BY FIELDTURF THEREIN. ALL MAINTENANCE SHALL BE PERFORMED BY FIELDTURF-TRAINED AND/OR FIELDTURF-AUTHORIZED MAINTENANCE PERSONNEL ONLY.

Furthermore, this Manufacturer's Limited Warranty ***does not cover****:*

1. Any damage resulting, directly or indirectly, from *force majeure*, accident, misuse, intentional and unintentional abuse, infill displacement, neglect; or from usage, unintentional or otherwise, that cannot reasonably be considered as normal play or ordinary use of the Product. For purposes of this Warranty, normal play and ordinary use shall mean usage up to 3,000 hours per year of regular play and utilization for the sporting activities provided herein; normal play and ordinary use also includes a reasonable number of users or participants, but does not include repetitive marching, repetitive training or high-intensity drills on the same part of the field, especially in the areas including, but not limited to, home plate, pitcher's mound, base areas, base paths, soccer penalty mark/spot areas, goal areas, sideline areas and lacrosse crease areas, all of which require frequent maintenance in accordance with FieldTurf Maintenance Guidelines and which may require regular replacement. This Warranty is expressly conditioned upon the Customer completing and submitting the FieldTurf Maintenance Log provided in FieldTurf's Maintenance Guidelines.

2. Damage resulting from failure to maintain the Product in accordance with FieldTurf's Maintenance Guidelines provided to the Purchaser. The Purchaser shall keep a log of all maintenance performed on the Product and supply FieldTurf with a copy upon request. Purchaser acknowledges that organic infill systems such as those in the *PureCob* product require specialized maintenance and care and given the nature of FieldTurf's *PureCob* product, this Warranty shall be conditioned upon the Purchaser carrying out regular *PureCob*-specific field maintenance as specified in FieldTurf's applicable maintenance manuals/guidelines and upon maintaining written

SAMPLE

FieldTurf
A Tarkett Sports Company

Manufacturer's Limited Warranty

logs showing same. Purchaser understands the particular *PureCob* requirements for maintaining proper infill levels and agrees, as necessary, to undertake responsibility for infill replenishment and maintenance anywhere infill is naturally displaced. The Purchaser also acknowledges that the characteristics of the *PureCob* materials may result in naturally occurring changes, including but not limited to, color and appearance of the materials within the infill layers; accordingly and without limitation, *PureCob* is subject to a change in color which usually presents as a darker surface color, but which will not affect the performance of the field

3. Damage resulting from repair, attempted repair and/or maintenance by anyone other than FieldTurf, an authorized FieldTurf distributor or an authorized FieldTurf maintainer.
4. Damage due to causes which include, but are not limited to, the application of chemicals and/or cleaning agents, adhesive backing, dirt, traffic, negligence, vandalism, fire, flood, windstorm, animals, improper care and Acts of God.
5. Failure and/or improper design of the base; depression of the soil, subsurface or other matter upon which the base or Product rests; and any and all resulting damage to the Product arising therefrom.
6. FieldTurf does not warrant the percolation rate, long term planarity and/or compaction of the base which the product is installed. **FIELDTURF DISCLAIMS ALL WARRANTIES AS TO THE BASE, EXPRESS OR IMPLIED, AND ANY AND ALL RESULTING DAMAGE TO THE PRODUCT ARISING THEREFROM**.
7. Damage resulting from the use of improper footwear such as long-spiked track shoes, regular and repeated use of steel cleats, and flat-soled shoes. Standard molded soccer or football cleats are recommended.
8. Damage resulting from the inadequate installation, improper maintenance and/or other failure of any third-party shock pad or underlayment pad installed beneath the Product, including, but not limited to, detachment of the Product caused by expansion and/or contraction of the third party shock pad or underlayment pad.

All synthetic turf is subject to normal wear and tear, which does not constitute a manufacturing defect and is not covered by this Warranty. In addition to the other factors listed in this Warranty and without limitation, the extent of the wear and tear depends on the construction of synthetic turf (fiber face weight, stitch rate, fiber pile height and gauge, infill components and maintenance of the field) and the intensity of use of the synthetic turf. The synthetic turf will be stable to light fading with the maximum fading of the synthetic turf during the Warranty period not to exceed fifteen percent (15%) of color loss annually based upon an acceptable grey scale. This Warranty does not cover slight variations or gradations of color within the Product and/or face distortion. Normal behavior of the fiber and infill with respect to the wear pattern of a field is more fully explained in the "Field Settling" document, provided in the FieldTurf After-Sales Service Package and the PureCob "*What to Look Out For*" Handout attached herein as **Appendix 1**.

FieldTurf disclaims all liability for incidental and consequential damages for breach of any express or implied warranty, including any implied warranty of merchantability, with respect to the Product. In the event that the Product be used for purposes other than the sporting activities provided herein or for any other uses for which FieldTurf has provided its written authorization, FieldTurf shall not be responsible for damages resulting therefrom and, therefore, this Warranty, as well as any and all applicable legal warranties, shall become **null and void** as Purchaser understands that FieldTurf has tested the Product for use in connection with the said sporting activities and/or uses, and that it may not have tested the Product for other such uses. Any Product repairs or replacements performed under the terms of this Warranty shall not extend the term of this Warranty.

Name of Purchaser:	**CLIENT NAME**	*Sporting Activities:*	Multi-Sport Use
Date of Completion:		*Installed by:*	FieldTurf USA, Inc.
Location:		*City:*	
Address:		*Zip:*	
State:		*Fax/email:*	
Tel:			
Signature:		*Name :*	Darren Gill
Date:		*Reference:*	8800

SAMPLE

This warranty is insured by a third party.
For more information please contact Customer Service at FieldTurf at the number listed below.
7445 Côte-de-Liesse Road Suite 200, Montreal, QC, Canada H4T 1G2 • Toll Free: 1-800-724-2969 •

FieldTurf
A Tarkett Sports Company

Manufacturer's Limited Warranty

Appendix 1

FieldTurf®
A Tarkett Sports Company

SUSTAIN THE GAME

PureCob

WHAT TO LOOK OUT FOR

OUR SYSTEMS WITH PURECOB INFILL REQUIRE THE CARE AND MAINTENANCE YOU WOULD EXPECT TO GIVE TO A SYNTHETIC TURF FIELD, BUT THERE ARE SOME SPECIFICS THAT YOU SHOULD B E AWARE OF:

THE FIRST MONTHS AFTER INSTALLATION

It will normally take several months for the infill to fully settle between the grass filaments and some 'static cling' of the natural infill to the synthetic turf fiber is normal. Regular maintenance should start immediately after the handover of the field. For our PureCob infill, it is important to note that during its production process the corncobs will be compressed, and thereafter, the grain will swell by approximately 30% after water is applied. This implies that it may initially look like too little corn cob infill has been applied, however after the field has received a watering by (natural) rainfall, or by wetting the field, the corn cob particles will regain their original volume.

REQUIRED MAINTENANCE

PureCob typically requires additional attention and maintenance. Due to its specific weight, some of the infill material is more mobile, especially during extreme weather. Care should be taken to top up and brush as required. It is possible that the infill may displace during heavy rainfall, however it can be easily redistributed once the playing area has dried out. If infill becomes visible on the playing surface, sprinkling with water, or allowing the rain to fall, will settle the infill back into the system. PureCob retains more water than rubber based infills. As a result, depending on the climate, the high moisture content could lend itself to being vulnerable to freezing due to ambient temperature changes. The maintenance activities of Brushing, Aerating, Raking, and Sweeping should be adhered to.

AESTHETICS

PureCob is a natural material with a natural aesthetic and, over time, the look and shape of the infill granules will alter slightly. Typically, the granules will go darker in colour. This is completely normal and does not affect their performance or durability in any way.

NATURAL INFILLS CAN COOL

PureCob acts as a cooling agent within a synthetic turf system – also adding an additional level of comfort during hot periods.

fieldturf.com

This warranty is insured by a third party.

For more information please contact Customer Service at FieldTurf at the number listed below.

7445 Côte-de-Liesse Road Suite 200, Montreal, QC, Canada H4T 1G2 • Toll Free: 1-800-724-2969 •

FieldTurf
A Tarkett Sports Company

Manufacturer's Limited Warranty

FieldTurf warrants that if **FieldTurf product code *PureCob*** (Product) for multi-sport use synthetic turf proves to be defective in material or installation workmanship, therefore, resulting in premature wear, during normal and ordinary use of the Product for the sporting activities provided herein or for any other uses for which FieldTurf has provided its written authorization, within **eight (8) years** from the date of completion of installation as indicated in this Warranty, FieldTurf shall either repair or replace the affected area of the Product in accordance with the terms of this Warranty. FieldTurf's sole liability under this Warranty shall be limited to either repair or replacement of the affected area of the Product, at its sole discretion, and FieldTurf shall have no other obligations or liabilities with respect to defects of the Product. FieldTurf will, at FieldTurf's option, either repair or replace the affected area to the extent required to meet the Warranty period, but no cash refunds will be made**.** This Warranty shall commence upon the date of completion indicated in this Warranty. The accompanying Warranty service will not come into effect unless and until FieldTurf's Certificate of Completion is sent for validation to the corporate office of FieldTurf indicated herein within thirty (30) days of the date of completion or Purchaser's first use, whichever occurs first. In all cases, the Warranty shall be deemed to commence upon the date of completion indicated in this Warranty. The acceptance form of the terms and conditions contained in FieldTurf's Maintenance Guidelines must also be provided to FieldTurf's corporate office within thirty (30) days of completion of installation. This Warranty is limited to the remedies of repair or replacement, which shall constitute the exclusive remedies available under this Warranty; all other remedies or recourses which might otherwise be available are hereby waived by the Purchaser. FieldTurf will have no other obligations or liability for damages arising out of or in connection with the use or performance of the Product, including, but without limitation, damages for personal injury and/or economic losses. This Warranty shall not come into effect, and FieldTurf shall have no obligations under this Warranty, unless and until FieldTurf is paid in full for the Product to be warranted hereunder.

Field Markings: Football, Soccer

Other Exclusions

EXCEPT AS EXPRESSLY SET FORTH IN THE MANUFACTURER'S LIMITED WARRANTY ABOVE, FIELDTURF DISCLAIMS ALL OTHER WARRANTIES OF ANY KIND, EXPRESS OR IMPLIED, IN FACT OR IN LAW, INCLUDING, BUT NOT LIMITED TO, THE IMPLIED WARRANTIES OF MERCHANTABILITY AND FITNESS FOR A PARTICULAR PURPOSE.

THIS WARRANTY SHALL BECOME NULL AND VOID IF THE PURCHASER FAILS TO MAINTAIN THE FIELD IN ACCORDANCE WITH THE FIELDTURF MAINTENANCE GUIDELINES AND SCHEDULE PROVIDED BY FIELDTURF THEREIN. ALL MAINTENANCE SHALL BE PERFORMED BY FIELDTURF-TRAINED AND/OR FIELDTURF-AUTHORIZED MAINTENANCE PERSONNEL ONLY.

Furthermore, this Manufacturer's Limited Warranty ***does not cover:***

1. Any damage resulting, directly or indirectly, from *force majeure*, accident, misuse, intentional and unintentional abuse, infill displacement, neglect; or from usage, unintentional or otherwise, that cannot reasonably be considered as normal play or ordinary use of the Product. For purposes of this Warranty, normal play and ordinary use shall mean usage up to 3,000 hours per year of regular play and utilization for the sporting activities provided herein; normal play and ordinary use also includes a reasonable number of users or participants, but does not include repetitive marching, repetitive training or high-intensity drills on the same part of the field, especially in the areas including, but not limited to, home plate, pitcher's mound, base areas, base paths, soccer penalty mark/spot areas, goal areas, sideline areas and lacrosse crease areas, all of which require frequent maintenance in accordance with FieldTurf Maintenance Guidelines and which may require regular replacement. This Warranty is expressly conditioned upon the Customer completing and submitting the FieldTurf Maintenance Log provided in FieldTurf's Maintenance Guidelines.
2. Damage resulting from failure to maintain the Product in accordance with FieldTurf's Maintenance Guidelines provided to the Purchaser. The Purchaser shall keep a log of all maintenance performed on the Product and supply FieldTurf with a copy upon request. Purchaser acknowledges that organic infill systems such as those in the *PureCob* product require specialized maintenance and care and given the nature of FieldTurf's *PureCob* product, this Warranty shall be conditioned upon the Purchaser carrying out regular *PureCob*-specific field maintenance as specified in FieldTurf's applicable maintenance manuals/guidelines and upon maintaining written logs showing same. Purchaser understands the particular *PureCob* requirements for maintaining proper infill levels and agrees, as necessary, to undertake responsibility for infill replenishment and maintenance anywhere infill is naturally displaced. The Purchaser also

SAMPLE

FieldTurf
A Tarkett Sports Company

Manufacturer's Limited Warranty

acknowledges that the characteristics of the *PureCob* materials may result in naturally occurring changes, including but not limited to, color and appearance of the materials within the infill layers; accordingly and without limitation, *PureCob* is subject to a change in color which usually presents as a darker surface color, but which will not affect the performance of the field

3. Damage resulting from repair, attempted repair and/or maintenance by anyone other than FieldTurf, an authorized FieldTurf distributor or an authorized FieldTurf maintainer.
4. Damage due to causes which include, but are not limited to, the application of chemicals and/or cleaning agents, adhesive backing, dirt, traffic, negligence, vandalism, fire, flood, windstorm, animals, improper care and Acts of God.
5. Failure and/or improper design of the base; depression of the soil, subsurface or other matter upon which the base or Product rests; and any and all resulting damage to the Product arising therefrom.
6. FieldTurf does not warrant the percolation rate, long term planarity and/or compaction of the base which the product is installed. **FIELDTURF DISCLAIMS ALL WARRANTIES AS TO THE BASE, EXPRESS OR IMPLIED, AND ANY AND ALL RESULTING DAMAGE TO THE PRODUCT ARISING THEREFROM**.
7. Damage resulting from the use of improper footwear such as long-spiked track shoes, regular and repeated use of steel cleats, and flat-soled shoes. Standard molded soccer or football cleats are recommended.
8. Damage resulting from the inadequate installation, improper maintenance and/or other failure of any third-party shock pad or underlayment pad installed beneath the Product, including, but not limited to, detachment of the Product caused by expansion and/or contraction of the third party shock pad or underlayment pad.

All synthetic turf is subject to normal wear and tear, which does not constitute a manufacturing defect and is not covered by this Warranty. In addition to the other factors listed in this Warranty and without limitation, the extent of the wear and tear depends on the construction of synthetic turf (fiber face weight, stitch rate, fiber pile height and gauge, infill components and maintenance of the field) and the intensity of use of the synthetic turf. The synthetic turf will be stable to light fading with the maximum fading of the synthetic turf during the Warranty period not to exceed fifteen percent (15%) of color loss annually based upon an acceptable grey scale. This Warranty does not cover slight variations or gradations of color within the Product and/or face distortion. Normal behavior of the fiber and infill with respect to the wear pattern of a field is more fully explained in the "Field Settling" document, provided in the FieldTurf After-Sales Service Package and the PureCob "*What to Look Out For*" Handout attached herein as **Appendix 1**.

FieldTurf disclaims all liability for incidental and consequential damages for breach of any express or implied warranty, including any implied warranty of merchantability, with respect to the Product. In the event that the Product be used for purposes other than the sporting activities provided herein or for any other uses for which FieldTurf has provided its written authorization, FieldTurf shall not be responsible for damages resulting therefrom and, therefore, this Warranty, as well as any and all applicable legal warranties, shall become **null and void** as Purchaser understands that FieldTurf has tested the Product for use in connection with the said sporting activities and/or uses, and that it may not have tested the Product for other such uses. Any Product repairs or replacements performed under the terms of this Warranty shall not extend the term of this Warranty.

Name of Purchaser:	**CLIENT NAME**	*Sporting Activities:*	Multi-Sport Use
Date of Completion:		*Installed by:*	FieldTurf USA, Inc.
Location:		*City:*	
Address:		*Zip:*	
State:		*Fax/email:*	
Tel:			
Signature:		*Name :*	Darren Gill
Date:		*Reference:*	8800

SAMPLE

This warranty is insured by a third party.
For more information please contact Customer Service at FieldTurf at the number listed below.
7445 Côte-de-Liesse Road Suite 200, Montreal, QC, Canada H4T 1G2 • Toll Free: 1-800-724-2969 •

FieldTurf
A Tarkett Sports Company

Manufacturer's Limited Warranty

Appendix 1

FieldTurf®
A Tarkett Sports Company

SUSTAIN THE GAME

PureCob

WHAT TO LOOK OUT FOR

OUR SYSTEMS WITH PURECOB INFILL REQUIRE THE CARE AND MAINTENANCE YOU WOULD EXPECT TO GIVE TO A SYNTHETIC TURF FIELD, BUT THERE ARE SOME SPECIFICS THAT YOU SHOULD B E AWARE OF:

THE FIRST MONTHS AFTER INSTALLATION

It will normally take several months for the infill to fully settle between the grass filaments and some 'static cling' of the natural infill to the synthetic turf fiber is normal. Regular maintenance should start immediately after the handover of the field. For our PureCob infill, it is important to note that during its production process the corncobs will be compressed, and thereafter, the grain will swell by approximately 30% after water is applied. This implies that it may initially look like too little corn cob infill has been applied, however after the field has received a watering by (natural) rainfall, or by wetting the field, the corn cob particles will regain their original volume.

REQUIRED MAINTENANCE

PureCob typically requires additional attention and maintenance. Due to its specific weight, some of the infill material is more mobile, especially during extreme weather. Care should be taken to top up and brush as required. It is possible that the infill may displace during heavy rainfall, however it can be easily redistributed once the playing area has dried out. If infill becomes visible on the playing surface, sprinkling with water, or allowing the rain to fall, will settle the infill back into the system. PureCob retains more water than rubber based infills. As a result, depending on the climate, the high moisture content could lend itself to being vulnerable to freezing due to ambient temperature changes. The maintenance activities of Brushing, Aerating, Raking, and Sweeping should be adhered to.

AESTHETICS

PureCob is a natural material with a natural aesthetic and, over time, the look and shape of the infill granules will alter slightly. Typically, the granules will go darker in colour. This is completely normal and does not affect their performance or durability in any way.

NATURAL INFILLS CAN COOL

PureCob acts as a cooling agent within a synthetic turf system – also adding an additional level of comfort during hot periods.

fieldturf.com

This warranty is insured by a third party.

For more information please contact Customer Service at FieldTurf at the number listed below.

7445 Côte-de-Liesse Road Suite 200, Montreal, QC, Canada H4T 1G2 • Toll Free: 1-800-724-2969 •

FieldTurf
A Tarkett Sports Company

Manufacturer's Limited Warranty

FieldTurf warrants that if **FieldTurf COREproduct code *PureCob*** (Product) for multi-sport use synthetic turf proves to be defective in material or installation workmanship, therefore, resulting in premature wear, during normal and ordinary use of the Product for the sporting activities provided herein or for any other uses for which FieldTurf has provided its written authorization, within **ten (10) years** from the date of completion of installation as indicated in this Warranty, FieldTurf shall either repair or replace the affected area of the Product in accordance with the terms of this Warranty. FieldTurf's sole liability under this Warranty shall be limited to either repair or replacement of the affected area of the Product, at its sole discretion, and FieldTurf shall have no other obligations or liabilities with respect to defects of the Product. FieldTurf will, at FieldTurf's option, either repair or replace the affected area to the extent required to meet the Warranty period, but no cash refunds will be made**.** FieldTurf warrants that all materials installed meet or exceed the product specifications and further warrants that replacement material will be available through the Warranty period. FieldTurf will verify that their representative has inspected the installation and that the work conforms to FieldTurf's requirements and further warrants that the installation was done in accordance with both FieldTurf's recommendations and any written directives of FieldTurf's representative. This Warranty shall commence upon the date of completion indicated in this Warranty. The accompanying Warranty service will not come into effect unless and until FieldTurf's Certificate of Completion is sent for validation to the corporate office of FieldTurf indicated herein within thirty (30) days of the date of completion or Purchaser's first use, whichever occurs first. In all cases, the Warranty shall be deemed to commence upon the date of completion indicated in this Warranty. The acceptance form of the terms and conditions contained in FieldTurf's Maintenance Guidelines must also be provided to FieldTurf's corporate office within thirty (30) days of completion of installation. FieldTurf warrants that the G-max shall maintain a value (option 1: below one hundred thirty-five (135) at installation and no greater than one hundred eight-five (185)) or option 2: (that shall not exceed two hundred (200)) for the duration of the warranty, as per ASTM 1936 and F-355 standards, providing that the customer has performed the regular maintenance as outlined in the maintenance guidelines. This Warranty is limited to the remedies of repair or replacement, which shall constitute the exclusive remedies available under this Warranty; all other remedies or recourses which might otherwise be available are hereby waived by the Purchaser. FieldTurf will have no other obligations or liability for damages arising out of or in connection with the use or performance of the Product, including, but without limitation, damages for personal injury and/or economic losses. This Warranty shall not come into effect, and FieldTurf shall have no obligations under this Warranty, unless and until FieldTurf is paid in full for the Product to be warranted hereunder.

Field Markings: Football, Soccer

Other Exclusions

EXCEPT AS EXPRESSLY SET FORTH IN THE MANUFACTURER'S LIMITED WARRANTY ABOVE, FIELDTURF DISCLAIMS ALL OTHER WARRANTIES OF ANY KIND, EXPRESS OR IMPLIED, IN FACT OR IN LAW, INCLUDING, BUT NOT LIMITED TO, THE IMPLIED WARRANTIES OF MERCHANTABILITY AND FITNESS FOR A PARTICULAR PURPOSE.

THIS WARRANTY SHALL BECOME NULL AND VOID IF THE PURCHASER FAILS TO MAINTAIN THE FIELD IN ACCORDANCE WITH THE FIELDTURF MAINTENANCE GUIDELINES AND SCHEDULE PROVIDED BY FIELDTURF THEREIN. ALL MAINTENANCE SHALL BE PERFORMED BY FIELDTURF-TRAINED AND/OR FIELDTURF-AUTHORIZED MAINTENANCE PERSONNEL ONLY.

Furthermore, this Manufacturer's Limited Warranty ***does not cover****:*

1. Any damage resulting, directly or indirectly, from *force majeure*, accident, misuse, intentional and unintentional abuse, infill displacement, neglect; or from usage, unintentional or otherwise, that cannot reasonably be considered as normal play or ordinary use of the Product. For purposes of this Warranty, normal play and ordinary use shall mean usage up to 3,000 hours per year of regular play and utilization for the sporting activities provided herein; normal play and ordinary use also includes a reasonable number of users or participants, but does not include repetitive marching, repetitive training or high-intensity drills on the same part of the field, especially in the areas including, but not limited to, home plate, pitcher's mound, base areas, base paths, soccer penalty mark/spot areas, goal areas, sideline areas and lacrosse crease areas, all of which require frequent maintenance in accordance with FieldTurf Maintenance Guidelines and which may require regular replacement. This Warranty is expressly conditioned upon the Customer completing and submitting the FieldTurf Maintenance Log provided in FieldTurf's Maintenance Guidelines.

2. Damage resulting from failure to maintain the Product in accordance with FieldTurf's Maintenance Guidelines provided to the Purchaser. The Purchaser shall keep a log of all maintenance performed on the Product and supply FieldTurf with a copy upon request. Purchaser acknowledges that organic infill systems such as those in the *PureCob* product require specialized maintenance and care and given the nature of FieldTurf's *PureCob* product, this Warranty shall be conditioned upon the Purchaser carrying out regular *PureCob*-specific field maintenance as specified in FieldTurf's applicable maintenance manuals/guidelines and upon maintaining written

SAMPLE

FieldTurf
A Tarkett Sports Company

Manufacturer's Limited Warranty

logs showing same. Purchaser understands the particular *PureCob* requirements for maintaining proper infill levels and agrees, as necessary, to undertake responsibility for infill replenishment and maintenance anywhere infill is naturally displaced. The Purchaser also acknowledges that the characteristics of the *PureCob* materials may result in naturally occurring changes, including but not limited to, color and appearance of the materials within the infill layers; accordingly and without limitation, *PureCob* is subject to a change in color which usually presents as a darker surface color, but which will not affect the performance of the field

3. Damage resulting from repair, attempted repair and/or maintenance by anyone other than FieldTurf, an authorized FieldTurf distributor or an authorized FieldTurf maintainer.
4. Damage due to causes which include, but are not limited to, the application of chemicals and/or cleaning agents, adhesive backing, dirt, traffic, negligence, vandalism, fire, flood, windstorm, animals, improper care and Acts of God.
5. Failure and/or improper design of the base; depression of the soil, subsurface or other matter upon which the base or Product rests; and any and all resulting damage to the Product arising therefrom.
6. FieldTurf does not warrant the percolation rate, long term planarity and/or compaction of the base which the product is installed. **FIELDTURF DISCLAIMS ALL WARRANTIES AS TO THE BASE, EXPRESS OR IMPLIED, AND ANY AND ALL RESULTING DAMAGE TO THE PRODUCT ARISING THEREFROM**.
7. Damage resulting from the use of improper footwear such as long-spiked track shoes, regular and repeated use of steel cleats, and flat-soled shoes. Standard molded soccer or football cleats are recommended.
8. Damage resulting from the inadequate installation, improper maintenance and/or other failure of any third-party shock pad or underlayment pad installed beneath the Product, including, but not limited to, detachment of the Product caused by expansion and/or contraction of the third party shock pad or underlayment pad.

All synthetic turf is subject to normal wear and tear, which does not constitute a manufacturing defect and is not covered by this Warranty. In addition to the other factors listed in this Warranty and without limitation, the extent of the wear and tear depends on the construction of synthetic turf (fiber face weight, stitch rate, fiber pile height and gauge, infill components and maintenance of the field) and the intensity of use of the synthetic turf. The synthetic turf will be stable to light fading with the maximum fading of the synthetic turf during the Warranty period not to exceed fifteen percent (15%) of color loss annually based upon an acceptable grey scale. This Warranty does not cover slight variations or gradations of color within the Product and/or face distortion. Normal behavior of the fiber and infill with respect to the wear pattern of a field is more fully explained in the "Field Settling" document, provided in the FieldTurf After-Sales Service Package and the PureCob "*What to Look Out For*" Handout attached herein as **Appendix 1**.

FieldTurf disclaims all liability for incidental and consequential damages for breach of any express or implied warranty, including any implied warranty of merchantability, with respect to the Product. In the event that the Product be used for purposes other than the sporting activities provided herein or for any other uses for which FieldTurf has provided its written authorization, FieldTurf shall not be responsible for damages resulting therefrom and, therefore, this Warranty, as well as any and all applicable legal warranties, shall become **null and void** as Purchaser understands that FieldTurf has tested the Product for use in connection with the said sporting activities and/or uses, and that it may not have tested the Product for other such uses. Any Product repairs or replacements performed under the terms of this Warranty shall not extend the term of this Warranty.

Name of Purchaser:	**CLIENT NAME**	*Sporting Activities:*	Multi-Sport Use
Date of Completion:		*Installed by:*	FieldTurf USA, Inc.
Location:		*City:*	
Address:		*Zip:*	
State:		*Fax/email:*	
Tel:			
Signature:		*Name :*	Darren Gill
Date:		*Reference:*	8800

SAMPLE

This warranty is insured by a third party.
For more information please contact Customer Service at FieldTurf at the number listed below.
7445 Côte-de-Liesse Road Suite 200, Montreal, QC, Canada H4T 1G2 • Toll Free: 1-800-724-2969 •

FieldTurf
A Tarkett Sports Company

Manufacturer's Limited Warranty

Appendix 1

FieldTurf®
A Tarkett Sports Company

SUSTAIN THE GAME

PureCob

WHAT TO LOOK OUT FOR

OUR SYSTEMS WITH PURECOB INFILL REQUIRE THE CARE AND MAINTENANCE YOU WOULD EXPECT TO GIVE TO A SYNTHETIC TURF FIELD, BUT THERE ARE SOME SPECIFICS THAT YOU SHOULD B E AWARE OF:

THE FIRST MONTHS AFTER INSTALLATION

It will normally take several months for the infill to fully settle between the grass filaments and some 'static cling' of the natural infill to the synthetic turf fiber is normal. Regular maintenance should start immediately after the handover of the field. For our PureCob infill, it is important to note that during its production process the corncobs will be compressed, and thereafter, the grain will swell by approximately 30% after water is applied. This implies that it may initially look like too little corn cob infill has been applied, however after the field has received a watering by (natural) rainfall, or by wetting the field, the corn cob particles will regain their original volume.

REQUIRED MAINTENANCE

PureCob typically requires additional attention and maintenance. Due to its specific weight, some of the infill material is more mobile, especially during extreme weather. Care should be taken to top up and brush as required. It is possible that the infill may displace during heavy rainfall, however it can be easily redistributed once the playing area has dried out. If infill becomes visible on the playing surface, sprinkling with water, or allowing the rain to fall, will settle the infill back into the system. PureCob retains more water than rubber based infills. As a result, depending on the climate, the high moisture content could lend itself to being vulnerable to freezing due to ambient temperature changes. The maintenance activities of Brushing, Aerating, Raking, and Sweeping should be adhered to.

AESTHETICS

PureCob is a natural material with a natural aesthetic and, over time, the look and shape of the infill granules will alter slightly. Typically, the granules will go darker in colour. This is completely normal and does not affect their performance or durability in any way.

NATURAL INFILLS CAN COOL

PureCob acts as a cooling agent within a synthetic turf system – also adding an additional level of comfort during hot periods.

fieldturf.com

This warranty is insured by a third party.

For more information please contact Customer Service at FieldTurf at the number listed below.

7445 Côte-de-Liesse Road Suite 200, Montreal, QC, Canada H4T 1G2 • Toll Free: 1-800-724-2969 •

FieldTurf
A Tarkett Sports Company

Manufacturer's Limited Warranty

FieldTurf warrants that if **FieldTurf COREproduct code *PureCob*** (Product) for multi-sport use synthetic turf proves to be defective in material or installation workmanship, therefore, resulting in premature wear, during normal and ordinary use of the Product for the sporting activities provided herein or for any other uses for which FieldTurf has provided its written authorization, within **ten (10) years** from the date of completion of installation as indicated in this Warranty, FieldTurf shall either repair or replace the affected area of the Product in accordance with the terms of this Warranty. FieldTurf's sole liability under this Warranty shall be limited to either repair or replacement of the affected area of the Product, at its sole discretion, and FieldTurf shall have no other obligations or liabilities with respect to defects of the Product. FieldTurf will, at FieldTurf's option, either repair or replace the affected area to the extent required to meet the Warranty period, but no cash refunds will be made**.** This Warranty shall commence upon the date of completion indicated in this Warranty. The accompanying Warranty service will not come into effect unless and until FieldTurf's Certificate of Completion is sent for validation to the corporate office of FieldTurf indicated herein within thirty (30) days of the date of completion or Purchaser's first use, whichever occurs first. In all cases, the Warranty shall be deemed to commence upon the date of completion indicated in this Warranty. The acceptance form of the terms and conditions contained in FieldTurf's Maintenance Guidelines must also be provided to FieldTurf's corporate office within thirty (30) days of completion of installation. This Warranty is limited to the remedies of repair or replacement, which shall constitute the exclusive remedies available under this Warranty; all other remedies or recourses which might otherwise be available are hereby waived by the Purchaser. FieldTurf will have no other obligations or liability for damages arising out of or in connection with the use or performance of the Product, including, but without limitation, damages for personal injury and/or economic losses. This Warranty shall not come into effect, and FieldTurf shall have no obligations under this Warranty, unless and until FieldTurf is paid in full for the Product to be warranted hereunder.

Field Markings: Football, Soccer

Other Exclusions

EXCEPT AS EXPRESSLY SET FORTH IN THE MANUFACTURER'S LIMITED WARRANTY ABOVE, FIELDTURF DISCLAIMS ALL OTHER WARRANTIES OF ANY KIND, EXPRESS OR IMPLIED, IN FACT OR IN LAW, INCLUDING, BUT NOT LIMITED TO, THE IMPLIED WARRANTIES OF MERCHANTABILITY AND FITNESS FOR A PARTICULAR PURPOSE.

THIS WARRANTY SHALL BECOME NULL AND VOID IF THE PURCHASER FAILS TO MAINTAIN THE FIELD IN ACCORDANCE WITH THE FIELDTURF MAINTENANCE GUIDELINES AND SCHEDULE PROVIDED BY FIELDTURF THEREIN. ALL MAINTENANCE SHALL BE PERFORMED BY FIELDTURF-TRAINED AND/OR FIELDTURF-AUTHORIZED MAINTENANCE PERSONNEL ONLY.

Furthermore, this Manufacturer's Limited Warranty ***does not cover****:*

1. Any damage resulting, directly or indirectly, from *force majeure*, accident, misuse, intentional and unintentional abuse, infill displacement, neglect; or from usage, unintentional or otherwise, that cannot reasonably be considered as normal play or ordinary use of the Product. For purposes of this Warranty, normal play and ordinary use shall mean usage up to 3,000 hours per year of regular play and utilization for the sporting activities provided herein; normal play and ordinary use also includes a reasonable number of users or participants, but does not include repetitive marching, repetitive training or high-intensity drills on the same part of the field, especially in the areas including, but not limited to, home plate, pitcher's mound, base areas, base paths, soccer penalty mark/spot areas, goal areas, sideline areas and lacrosse crease areas, all of which require frequent maintenance in accordance with FieldTurf Maintenance Guidelines and which may require regular replacement. This Warranty is expressly conditioned upon the Customer completing and submitting the FieldTurf Maintenance Log provided in FieldTurf's Maintenance Guidelines.
2. Damage resulting from failure to maintain the Product in accordance with FieldTurf's Maintenance Guidelines provided to the Purchaser. The Purchaser shall keep a log of all maintenance performed on the Product and supply FieldTurf with a copy upon request. Purchaser acknowledges that organic infill systems such as those in the *PureCob* product require specialized maintenance and care and given the nature of FieldTurf's *PureCob* product, this Warranty shall be conditioned upon the Purchaser carrying out regular *PureCob*-specific field maintenance as specified in FieldTurf's applicable maintenance manuals/guidelines and upon maintaining written logs showing same. Purchaser understands the particular *PureCob* requirements for maintaining proper infill levels and agrees, as necessary, to undertake responsibility for infill replenishment and maintenance anywhere infill is naturally displaced. The Purchaser also

SAMPLE

FieldTurf
A Tarkett Sports Company

Manufacturer's Limited Warranty

acknowledges that the characteristics of the *PureCob* materials may result in naturally occurring changes, including but not limited to, color and appearance of the materials within the infill layers; accordingly and without limitation, *PureCob* is subject to a change in color which usually presents as a darker surface color, but which will not affect the performance of the field

3. Damage resulting from repair, attempted repair and/or maintenance by anyone other than FieldTurf, an authorized FieldTurf distributor or an authorized FieldTurf maintainer.
4. Damage due to causes which include, but are not limited to, the application of chemicals and/or cleaning agents, adhesive backing, dirt, traffic, negligence, vandalism, fire, flood, windstorm, animals, improper care and Acts of God.
5. Failure and/or improper design of the base; depression of the soil, subsurface or other matter upon which the base or Product rests; and any and all resulting damage to the Product arising therefrom.
6. FieldTurf does not warrant the percolation rate, long term planarity and/or compaction of the base which the product is installed. **FIELDTURF DISCLAIMS ALL WARRANTIES AS TO THE BASE, EXPRESS OR IMPLIED, AND ANY AND ALL RESULTING DAMAGE TO THE PRODUCT ARISING THEREFROM**.
7. Damage resulting from the use of improper footwear such as long-spiked track shoes, regular and repeated use of steel cleats, and flat-soled shoes. Standard molded soccer or football cleats are recommended.
8. Damage resulting from the inadequate installation, improper maintenance and/or other failure of any third-party shock pad or underlayment pad installed beneath the Product, including, but not limited to, detachment of the Product caused by expansion and/or contraction of the third party shock pad or underlayment pad.

All synthetic turf is subject to normal wear and tear, which does not constitute a manufacturing defect and is not covered by this Warranty. In addition to the other factors listed in this Warranty and without limitation, the extent of the wear and tear depends on the construction of synthetic turf (fiber face weight, stitch rate, fiber pile height and gauge, infill components and maintenance of the field) and the intensity of use of the synthetic turf. The synthetic turf will be stable to light fading with the maximum fading of the synthetic turf during the Warranty period not to exceed fifteen percent (15%) of color loss annually based upon an acceptable grey scale. This Warranty does not cover slight variations or gradations of color within the Product and/or face distortion. Normal behavior of the fiber and infill with respect to the wear pattern of a field is more fully explained in the "Field Settling" document, provided in the FieldTurf After-Sales Service Package and the PureCob "*What to Look Out For*" Handout attached herein as **Appendix 1**.

FieldTurf disclaims all liability for incidental and consequential damages for breach of any express or implied warranty, including any implied warranty of merchantability, with respect to the Product. In the event that the Product be used for purposes other than the sporting activities provided herein or for any other uses for which FieldTurf has provided its written authorization, FieldTurf shall not be responsible for damages resulting therefrom and, therefore, this Warranty, as well as any and all applicable legal warranties, shall become **null and void** as Purchaser understands that FieldTurf has tested the Product for use in connection with the said sporting activities and/or uses, and that it may not have tested the Product for other such uses. Any Product repairs or replacements performed under the terms of this Warranty shall not extend the term of this Warranty.

Name of Purchaser:	**CLIENT NAME**	*Sporting Activities:*	Multi-Sport Use
Date of Completion:		*Installed by:*	FieldTurf USA, Inc.
Location:		*City:*	
Address:		*Zip:*	
State:		*Fax/email:*	
Tel:			
Signature:		*Name :*	Darren Gill
Date:		*Reference:*	8800

SAMPLE

This warranty is insured by a third party.
For more information please contact Customer Service at FieldTurf at the number listed below.
7445 Côte-de-Liesse Road Suite 200, Montreal, QC, Canada H4T 1G2 • Toll Free: 1-800-724-2969 •

FieldTurf
A Tarkett Sports Company

Manufacturer's Limited Warranty

Appendix 1

FieldTurf®
A Tarkett Sports Company

SUSTAIN THE GAME

PureCob

WHAT TO LOOK OUT FOR

OUR SYSTEMS WITH PURECOB INFILL REQUIRE THE CARE AND MAINTENANCE YOU WOULD EXPECT TO GIVE TO A SYNTHETIC TURF FIELD, BUT THERE ARE SOME SPECIFICS THAT YOU SHOULD B E AWARE OF:

THE FIRST MONTHS AFTER INSTALLATION

It will normally take several months for the infill to fully settle between the grass filaments and some 'static cling' of the natural infill to the synthetic turf fiber is normal. Regular maintenance should start immediately after the handover of the field. For our PureCob infill, it is important to note that during its production process the corncobs will be compressed, and thereafter, the grain will swell by approximately 30% after water is applied. This implies that it may initially look like too little corn cob infill has been applied, however after the field has received a watering by (natural) rainfall, or by wetting the field, the corn cob particles will regain their original volume.

REQUIRED MAINTENANCE

PureCob typically requires additional attention and maintenance. Due to its specific weight, some of the infill material is more mobile, especially during extreme weather. Care should be taken to top up and brush as required. It is possible that the infill may displace during heavy rainfall, however it can be easily redistributed once the playing area has dried out. If infill becomes visible on the playing surface, sprinkling with water, or allowing the rain to fall, will settle the infill back into the system. PureCob retains more water than rubber based infills. As a result, depending on the climate, the high moisture content could lend itself to being vulnerable to freezing due to ambient temperature changes. The maintenance activities of Brushing, Aerating, Raking, and Sweeping should be adhered to.

AESTHETICS

PureCob is a natural material with a natural aesthetic and, over time, the look and shape of the infill granules will alter slightly. Typically, the granules will go darker in colour. This is completely normal and does not affect their performance or durability in any way.

NATURAL INFILLS CAN COOL

PureCob acts as a cooling agent within a synthetic turf system – also adding an additional level of comfort during hot periods.

fieldturf.com

This warranty is insured by a third party.

For more information please contact Customer Service at FieldTurf at the number listed below.

7445 Côte-de-Liesse Road Suite 200, Montreal, QC, Canada H4T 1G2 • Toll Free: 1-800-724-2969 •

FieldTurf
A Tarkett Sports Company

Manufacturer's Limited Warranty

FieldTurf warrants that if **FieldTurf product code *PureFill*** (Product) for multi-sport use synthetic turf proves to be defective in material or installation workmanship, therefore, resulting in premature wear, during normal and ordinary use of the Product for the sporting activities provided herein or for any other uses for which FieldTurf has provided its written authorization, within **eight (8) years** from the date of completion of installation as indicated in this Warranty, FieldTurf shall either repair or replace the affected area of the Product in accordance with the terms of this Warranty. FieldTurf's sole liability under this Warranty shall be limited to either repair or replacement of the affected area of the Product, at its sole discretion, and FieldTurf shall have no other obligations or liabilities with respect to defects of the Product. FieldTurf will, at FieldTurf's option, either repair or replace the affected area to the extent required to meet the Warranty period, but no cash refunds will be made**.** FieldTurf warrants that all materials installed meet or exceed the product specifications and further warrants that replacement material will be available through the Warranty period. FieldTurf will verify that their representative has inspected the installation and that the work conforms to FieldTurf's requirements and further warrants that the installation was done in accordance with both FieldTurf's recommendations and any written directives of FieldTurf's representative. This Warranty shall commence upon the date of completion indicated in this Warranty. The accompanying Warranty service will not come into effect unless and until FieldTurf's Certificate of Completion is sent for validation to the corporate office of FieldTurf indicated herein within thirty (30) days of the date of completion or Purchaser's first use, whichever occurs first. In all cases, the Warranty shall be deemed to commence upon the date of completion indicated in this Warranty. The acceptance form of the terms and conditions contained in FieldTurf's Maintenance Guidelines must also be provided to FieldTurf's corporate office within thirty (30) days of completion of installation. FieldTurf warrants that the G-max shall maintain a value (option 1: below one hundred thirty-five (135) at installation and no greater than one hundred eight-five (185)) or option 2: (that shall not exceed two hundred (200)) for the duration of the warranty, as per ASTM 1936 and F-355 standards, providing that the customer has performed the regular maintenance as outlined in the maintenance guidelines. This Warranty is limited to the remedies of repair or replacement, which shall constitute the exclusive remedies available under this Warranty; all other remedies or recourses which might otherwise be available are hereby waived by the Purchaser. FieldTurf will have no other obligations or liability for damages arising out of or in connection with the use or performance of the Product, including, but without limitation, damages for personal injury and/or economic losses. This Warranty shall not come into effect, and FieldTurf shall have no obligations under this Warranty, unless and until FieldTurf is paid in full for the Product to be warranted hereunder.

Field Markings: Football, Soccer

Other Exclusions

EXCEPT AS EXPRESSLY SET FORTH IN THE MANUFACTURER'S LIMITED WARRANTY ABOVE, FIELDTURF DISCLAIMS ALL OTHER WARRANTIES OF ANY KIND, EXPRESS OR IMPLIED, IN FACT OR IN LAW, INCLUDING, BUT NOT LIMITED TO, THE IMPLIED WARRANTIES OF MERCHANTABILITY AND FITNESS FOR A PARTICULAR PURPOSE.

THIS WARRANTY SHALL BECOME NULL AND VOID IF THE PURCHASER FAILS TO MAINTAIN THE FIELD IN ACCORDANCE WITH THE FIELDTURF MAINTENANCE GUIDELINES AND SCHEDULE PROVIDED BY FIELDTURF THEREIN. ALL MAINTENANCE SHALL BE PERFORMED BY FIELDTURF-TRAINED AND/OR FIELDTURF-AUTHORIZED MAINTENANCE PERSONNEL ONLY.

Furthermore, this Manufacturer's Limited Warranty ***does not cover****:*

1. Any damage resulting, directly or indirectly, from *force majeure*, accident, misuse, intentional and unintentional abuse, infill displacement, neglect; or from usage, unintentional or otherwise, that cannot reasonably be considered as normal play or ordinary use of the Product. For purposes of this Warranty, normal play and ordinary use shall mean usage up to 3,000 hours per year of regular play and utilization for the sporting activities provided herein; normal play and ordinary use also includes a reasonable number of users or participants, but does not include repetitive marching, repetitive training or high-intensity drills on the same part of the field, especially in the areas including, but not limited to, home plate, pitcher's mound, base areas, base paths, soccer penalty mark/spot areas, goal areas, sideline areas and lacrosse crease areas, all of which require frequent maintenance in accordance with FieldTurf Maintenance Guidelines and which may require regular replacement. This Warranty is expressly conditioned upon the Customer completing and submitting the FieldTurf Maintenance Log provided in FieldTurf's Maintenance Guidelines.

2. Damage resulting from failure to maintain the Product in accordance with FieldTurf's Maintenance Guidelines provided to the Purchaser. The Purchaser shall keep a log of all maintenance performed on the Product and supply FieldTurf with a copy upon request. Purchaser acknowledges that organic infill systems such as those in the *PureFill* product require specialized maintenance and care and given the nature of FieldTurf's *PureFill* product, this Warranty shall be conditioned upon the Purchaser carrying out regular *PureFill*-specific field maintenance as specified in FieldTurf's applicable maintenance manuals/guidelines and upon maintaining written logs showing

SAMPLE

Manufacturer's Limited Warranty

same. Purchaser understands the particular *PureFill* requirements for maintaining proper infill levels and agrees, as necessary, to undertake responsibility for infill replenishment and maintenance anywhere infill is naturally displaced. The Purchaser also acknowledges that the characteristics of the *PureFill* materials may result in naturally occurring changes, including but not limited to, color and appearance of the materials within the infill layers; accordingly and without limitation, *PureFill* is subject to a change in color which usually presents as a darker surface color, but which will not affect the performance of the field

3. Damage resulting from repair, attempted repair and/or maintenance by anyone other than FieldTurf, an authorized FieldTurf distributor or an authorized FieldTurf maintainer.
4. Damage due to causes which include, but are not limited to, the application of chemicals and/or cleaning agents, adhesive backing, dirt, traffic, negligence, vandalism, fire, flood, windstorm, animals, improper care and Acts of God.
5. Failure and/or improper design of the base; depression of the soil, subsurface or other matter upon which the base or Product rests; and any and all resulting damage to the Product arising therefrom.
6. FieldTurf does not warrant the percolation rate, long term planarity and/or compaction of the base which the product is installed. **FIELDTURF DISCLAIMS ALL WARRANTIES AS TO THE BASE, EXPRESS OR IMPLIED, AND ANY AND ALL RESULTING DAMAGE TO THE PRODUCT ARISING THEREFROM**.
7. Damage resulting from the use of improper footwear such as long-spiked track shoes, regular and repeated use of steel cleats, and flat-soled shoes. Standard molded soccer or football cleats are recommended.
8. Damage resulting from the inadequate installation, improper maintenance and/or other failure of any third-party shock pad or underlayment pad installed beneath the Product, including, but not limited to, detachment of the Product caused by expansion and/or contraction of the third party shock pad or underlayment pad.

All synthetic turf is subject to normal wear and tear, which does not constitute a manufacturing defect and is not covered by this Warranty. In addition to the other factors listed in this Warranty and without limitation, the extent of the wear and tear depends on the construction of synthetic turf (fiber face weight, stitch rate, fiber pile height and gauge, infill components and maintenance of the field) and the intensity of use of the synthetic turf. The synthetic turf will be stable to light fading with the maximum fading of the synthetic turf during the Warranty period not to exceed fifteen percent (15%) of color loss annually based upon an acceptable grey scale. This Warranty does not cover slight variations or gradations of color within the Product and/or face distortion. Normal behavior of the fiber and infill with respect to the wear pattern of a field is more fully explained in the "Field Settling" document, provided in the FieldTurf After-Sales Service Package and the PureFill "*What to Look Out For*" Handout attached herein as **Appendix 1**.

FieldTurf disclaims all liability for incidental and consequential damages for breach of any express or implied warranty, including any implied warranty of merchantability, with respect to the Product. In the event that the Product be used for purposes other than the sporting activities provided herein or for any other uses for which FieldTurf has provided its written authorization, FieldTurf shall not be responsible for damages resulting therefrom and, therefore, this Warranty, as well as any and all applicable legal warranties, shall become **null and void** as Purchaser understands that FieldTurf has tested the Product for use in connection with the said sporting activities and/or uses, and that it may not have tested the Product for other such uses. Any Product repairs or replacements performed under the terms of this Warranty shall not extend the term of this Warranty.

Name of Purchaser:	**CLIENT NAME**	*Sporting Activities:*	Multi-Sport Use
Date of Completion:		*Installed by:*	FieldTurf USA, Inc.
Location:		*City:*	
Address:		*Zip:*	
State:		*Fax/email:*	
Tel:			
Signature:		*Name :*	Darren Gill
Date:		*Reference:*	8800

SAMPLE

FieldTurf
A Tarkett Sports Company

Manufacturer's Limited Warranty

Appendix 1

FieldTurf®
A Tarkett Sports Company

SUSTAIN THE GAME

PureFill

WHAT TO LOOK OUT FOR

OUR SYSTEMS WITH PUREFILL INFILL REQUIRE THE CARE AND MAINTENANCE YOU WOULD EXPECT TO GIVE TO A SYNTHETIC TURF FIELD, BUT THERE ARE SOME SPECIFICS THAT YOU SHOULD B E AWARE OF:

THE FIRST MONTHS AFTER INSTALLATION

It will normally take several months for the infill to fully settle between the grass filaments and some 'static cling' of the natural infill to the synthetic turf fiber is normal. Regular maintenance should start immediately after the handover of the field.

REQUIRED MAINTENANCE

PureFill typically requires additional attention and maintenance. Due to its specific weight, some of the infill material is more mobile, especially during extreme weather. Care should be taken to top up and brush as required. It is possible that the infill may displace during heavy rainfall, however it can be easily redistributed once the playing area has dried out. If infill becomes visible on the playing surface, sprinkling with water, or allowing the rain to fall, will settle the infill back into the system. PureFill retains more water than rubber based infills. As a result, depending on the climate, the high moisture content could lend itself to being vulnerable to freezing due to ambient temperature changes. The maintenance activities of Brushing, Aerating, Raking, and Sweeping should be adhered to.

AESTHETICS

PureFill is a natural material with a natural aesthetic and, over time, the look and shape of the infill granules will alter slightly. Typically, the granules will go darker in colour. This is completely normal and does not affect their performance or durability in any way.

NATURAL INFILLS CAN COOL

PureFill acts as a cooling agent within a synthetic turf system – also adding an additional level of comfort during hot periods.

fieldturf.com

This warranty is insured by a third party.

For more information please contact Customer Service at FieldTurf at the number listed below.

7445 Côte-de-Liesse Road Suite 200, Montreal, QC, Canada H4T 1G2 • Toll Free: 1-800-724-2969 •

FieldTurf
A Tarkett Sports Company

Manufacturer's Limited Warranty

FieldTurf warrants that if **FieldTurf product code *PureFill*** (Product) for multi-sport use synthetic turf proves to be defective in material or installation workmanship, therefore, resulting in premature wear, during normal and ordinary use of the Product for the sporting activities provided herein or for any other uses for which FieldTurf has provided its written authorization, within **eight (8) years** from the date of completion of installation as indicated in this Warranty, FieldTurf shall either repair or replace the affected area of the Product in accordance with the terms of this Warranty. FieldTurf's sole liability under this Warranty shall be limited to either repair or replacement of the affected area of the Product, at its sole discretion, and FieldTurf shall have no other obligations or liabilities with respect to defects of the Product. FieldTurf will, at FieldTurf's option, either repair or replace the affected area to the extent required to meet the Warranty period, but no cash refunds will be made**.** This Warranty shall commence upon the date of completion indicated in this Warranty. The accompanying Warranty service will not come into effect unless and until FieldTurf's Certificate of Completion is sent for validation to the corporate office of FieldTurf indicated herein within thirty (30) days of the date of completion or Purchaser's first use, whichever occurs first. In all cases, the Warranty shall be deemed to commence upon the date of completion indicated in this Warranty. The acceptance form of the terms and conditions contained in FieldTurf's Maintenance Guidelines must also be provided to FieldTurf's corporate office within thirty (30) days of completion of installation. This Warranty is limited to the remedies of repair or replacement, which shall constitute the exclusive remedies available under this Warranty; all other remedies or recourses which might otherwise be available are hereby waived by the Purchaser. FieldTurf will have no other obligations or liability for damages arising out of or in connection with the use or performance of the Product, including, but without limitation, damages for personal injury and/or economic losses. This Warranty shall not come into effect, and FieldTurf shall have no obligations under this Warranty, unless and until FieldTurf is paid in full for the Product to be warranted hereunder.

Field Markings: Football, Soccer

Other Exclusions

EXCEPT AS EXPRESSLY SET FORTH IN THE MANUFACTURER'S LIMITED WARRANTY ABOVE, FIELDTURF DISCLAIMS ALL OTHER WARRANTIES OF ANY KIND, EXPRESS OR IMPLIED, IN FACT OR IN LAW, INCLUDING, BUT NOT LIMITED TO, THE IMPLIED WARRANTIES OF MERCHANTABILITY AND FITNESS FOR A PARTICULAR PURPOSE.

THIS WARRANTY SHALL BECOME NULL AND VOID IF THE PURCHASER FAILS TO MAINTAIN THE FIELD IN ACCORDANCE WITH THE FIELDTURF MAINTENANCE GUIDELINES AND SCHEDULE PROVIDED BY FIELDTURF THEREIN. ALL MAINTENANCE SHALL BE PERFORMED BY FIELDTURF-TRAINED AND/OR FIELDTURF-AUTHORIZED MAINTENANCE PERSONNEL ONLY.

Furthermore, this Manufacturer's Limited Warranty ***does not cover:***

1. Any damage resulting, directly or indirectly, from *force majeure*, accident, misuse, intentional and unintentional abuse, infill displacement, neglect; or from usage, unintentional or otherwise, that cannot reasonably be considered as normal play or ordinary use of the Product. For purposes of this Warranty, normal play and ordinary use shall mean usage up to 3,000 hours per year of regular play and utilization for the sporting activities provided herein; normal play and ordinary use also includes a reasonable number of users or participants, but does not include repetitive marching, repetitive training or high-intensity drills on the same part of the field, especially in the areas including, but not limited to, home plate, pitcher's mound, base areas, base paths, soccer penalty mark/spot areas, goal areas, sideline areas and lacrosse crease areas, all of which require frequent maintenance in accordance with FieldTurf Maintenance Guidelines and which may require regular replacement. This Warranty is expressly conditioned upon the Customer completing and submitting the FieldTurf Maintenance Log provided in FieldTurf's Maintenance Guidelines.
2. Damage resulting from failure to maintain the Product in accordance with FieldTurf's Maintenance Guidelines provided to the Purchaser. The Purchaser shall keep a log of all maintenance performed on the Product and supply FieldTurf with a copy upon request. Purchaser acknowledges that organic infill systems such as those in the *PureFill* product require specialized maintenance and care and given the nature of FieldTurf's *PureFill* product, this Warranty shall be conditioned upon the Purchaser carrying out regular *PureFill*-specific field maintenance as specified in FieldTurf's applicable maintenance manuals/guidelines and upon maintaining written logs showing same. Purchaser understands the particular *PureFill* requirements for maintaining proper infill levels and agrees, as necessary, to undertake responsibility for infill replenishment and maintenance anywhere infill is naturally displaced. The Purchaser also

SAMPLE

Manufacturer's Limited Warranty

acknowledges that the characteristics of the *PureFill* materials may result in naturally occurring changes, including but not limited to, color and appearance of the materials within the infill layers; accordingly and without limitation, *PureFill* is subject to a change in color which usually presents as a darker surface color, but which will not affect the performance of the field

3. Damage resulting from repair, attempted repair and/or maintenance by anyone other than FieldTurf, an authorized FieldTurf distributor or an authorized FieldTurf maintainer.
4. Damage due to causes which include, but are not limited to, the application of chemicals and/or cleaning agents, adhesive backing, dirt, traffic, negligence, vandalism, fire, flood, windstorm, animals, improper care and Acts of God.
5. Failure and/or improper design of the base; depression of the soil, subsurface or other matter upon which the base or Product rests; and any and all resulting damage to the Product arising therefrom.
6. FieldTurf does not warrant the percolation rate, long term planarity and/or compaction of the base which the product is installed. **FIELDTURF DISCLAIMS ALL WARRANTIES AS TO THE BASE, EXPRESS OR IMPLIED, AND ANY AND ALL RESULTING DAMAGE TO THE PRODUCT ARISING THEREFROM**.
7. Damage resulting from the use of improper footwear such as long-spiked track shoes, regular and repeated use of steel cleats, and flat-soled shoes. Standard molded soccer or football cleats are recommended.
8. Damage resulting from the inadequate installation, improper maintenance and/or other failure of any third-party shock pad or underlayment pad installed beneath the Product, including, but not limited to, detachment of the Product caused by expansion and/or contraction of the third party shock pad or underlayment pad.

All synthetic turf is subject to normal wear and tear, which does not constitute a manufacturing defect and is not covered by this Warranty. In addition to the other factors listed in this Warranty and without limitation, the extent of the wear and tear depends on the construction of synthetic turf (fiber face weight, stitch rate, fiber pile height and gauge, infill components and maintenance of the field) and the intensity of use of the synthetic turf. The synthetic turf will be stable to light fading with the maximum fading of the synthetic turf during the Warranty period not to exceed fifteen percent (15%) of color loss annually based upon an acceptable grey scale. This Warranty does not cover slight variations or gradations of color within the Product and/or face distortion. Normal behavior of the fiber and infill with respect to the wear pattern of a field is more fully explained in the "Field Settling" document, provided in the FieldTurf After-Sales Service Package and the PureFill "*What to Look Out For*" Handout attached herein as **Appendix 1**.

FieldTurf disclaims all liability for incidental and consequential damages for breach of any express or implied warranty, including any implied warranty of merchantability, with respect to the Product. In the event that the Product be used for purposes other than the sporting activities provided herein or for any other uses for which FieldTurf has provided its written authorization, FieldTurf shall not be responsible for damages resulting therefrom and, therefore, this Warranty, as well as any and all applicable legal warranties, shall become **null and void** as Purchaser understands that FieldTurf has tested the Product for use in connection with the said sporting activities and/or uses, and that it may not have tested the Product for other such uses. Any Product repairs or replacements performed under the terms of this Warranty shall not extend the term of this Warranty.

Name of Purchaser:	**CLIENT NAME**	*Sporting Activities:*	Multi-Sport Use
Date of Completion:		*Installed by:*	FieldTurf USA, Inc.
Location:		*City:*	
Address:		*Zip:*	
State:		*Fax/email:*	
Tel:			
Signature:		*Name :*	Darren Gill
Date:		*Reference:*	8800

SAMPLE

FieldTurf
A Tarkett Sports Company

Manufacturer's Limited Warranty

Appendix 1

FieldTurf®
A Tarkett Sports Company

SUSTAIN THE GAME

PureFill

WHAT TO LOOK OUT FOR

OUR SYSTEMS WITH PUREFILL INFILL REQUIRE THE CARE AND MAINTENANCE YOU WOULD EXPECT TO GIVE TO A SYNTHETIC TURF FIELD, BUT THERE ARE SOME SPECIFICS THAT YOU SHOULD B E AWARE OF:

THE FIRST MONTHS AFTER INSTALLATION

It will normally take several months for the infill to fully settle between the grass filaments and some 'static cling' of the natural infill to the synthetic turf fiber is normal. Regular maintenance should start immediately after the handover of the field.

REQUIRED MAINTENANCE

PureFill typically requires additional attention and maintenance. Due to its specific weight, some of the infill material is more mobile, especially during extreme weather. Care should be taken to top up and brush as required. It is possible that the infill may displace during heavy rainfall, however it can be easily redistributed once the playing area has dried out. If infill becomes visible on the playing surface, sprinkling with water, or allowing the rain to fall, will settle the infill back into the system. PureFill retains more water than rubber based infills. As a result, depending on the climate, the high moisture content could lend itself to being vulnerable to freezing due to ambient temperature changes. The maintenance activities of Brushing, Aerating, Raking, and Sweeping should be adhered to.

AESTHETICS

PureFill is a natural material with a natural aesthetic and, over time, the look and shape of the infill granules will alter slightly. Typically, the granules will go darker in colour. This is completely normal and does not affect their performance or durability in any way.

NATURAL INFILLS CAN COOL

PureFill acts as a cooling agent within a synthetic turf system – also adding an additional level of comfort during hot periods.

fieldturf.com

This warranty is insured by a third party.

For more information please contact Customer Service at FieldTurf at the number listed below.

7445 Côte-de-Liesse Road Suite 200, Montreal, QC, Canada H4T 1G2 • Toll Free: 1-800-724-2969 •

FieldTurf
A Tarkett Sports Company

Manufacturer's Limited Warranty

FieldTurf warrants that if **FieldTurf COREproduct code *PureFill*** (Product) for multi-sport use synthetic turf proves to be defective in material or installation workmanship, therefore, resulting in premature wear, during normal and ordinary use of the Product for the sporting activities provided herein or for any other uses for which FieldTurf has provided its written authorization, within **ten (10) years** from the date of completion of installation as indicated in this Warranty, FieldTurf shall either repair or replace the affected area of the Product in accordance with the terms of this Warranty. FieldTurf's sole liability under this Warranty shall be limited to either repair or replacement of the affected area of the Product, at its sole discretion, and FieldTurf shall have no other obligations or liabilities with respect to defects of the Product. FieldTurf will, at FieldTurf's option, either repair or replace the affected area to the extent required to meet the Warranty period, but no cash refunds will be made**.** FieldTurf warrants that all materials installed meet or exceed the product specifications and further warrants that replacement material will be available through the Warranty period. FieldTurf will verify that their representative has inspected the installation and that the work conforms to FieldTurf's requirements and further warrants that the installation was done in accordance with both FieldTurf's recommendations and any written directives of FieldTurf's representative. This Warranty shall commence upon the date of completion indicated in this Warranty. The accompanying Warranty service will not come into effect unless and until FieldTurf's Certificate of Completion is sent for validation to the corporate office of FieldTurf indicated herein within thirty (30) days of the date of completion or Purchaser's first use, whichever occurs first. In all cases, the Warranty shall be deemed to commence upon the date of completion indicated in this Warranty. The acceptance form of the terms and conditions contained in FieldTurf's Maintenance Guidelines must also be provided to FieldTurf's corporate office within thirty (30) days of completion of installation. FieldTurf warrants that the G-max shall maintain a value (option 1: below one hundred thirty-five (135) at installation and no greater than one hundred eight-five (185)) or option 2: (that shall not exceed two hundred (200)) for the duration of the warranty, as per ASTM 1936 and F-355 standards, providing that the customer has performed the regular maintenance as outlined in the maintenance guidelines. This Warranty is limited to the remedies of repair or replacement, which shall constitute the exclusive remedies available under this Warranty; all other remedies or recourses which might otherwise be available are hereby waived by the Purchaser. FieldTurf will have no other obligations or liability for damages arising out of or in connection with the use or performance of the Product, including, but without limitation, damages for personal injury and/or economic losses. This Warranty shall not come into effect, and FieldTurf shall have no obligations under this Warranty, unless and until FieldTurf is paid in full for the Product to be warranted hereunder.

Field Markings: Football, Soccer

Other Exclusions

EXCEPT AS EXPRESSLY SET FORTH IN THE MANUFACTURER'S LIMITED WARRANTY ABOVE, FIELDTURF DISCLAIMS ALL OTHER WARRANTIES OF ANY KIND, EXPRESS OR IMPLIED, IN FACT OR IN LAW, INCLUDING, BUT NOT LIMITED TO, THE IMPLIED WARRANTIES OF MERCHANTABILITY AND FITNESS FOR A PARTICULAR PURPOSE.

THIS WARRANTY SHALL BECOME NULL AND VOID IF THE PURCHASER FAILS TO MAINTAIN THE FIELD IN ACCORDANCE WITH THE FIELDTURF MAINTENANCE GUIDELINES AND SCHEDULE PROVIDED BY FIELDTURF THEREIN. ALL MAINTENANCE SHALL BE PERFORMED BY FIELDTURF-TRAINED AND/OR FIELDTURF-AUTHORIZED MAINTENANCE PERSONNEL ONLY.

Furthermore, this Manufacturer's Limited Warranty ***does not cover****:*

1. Any damage resulting, directly or indirectly, from *force majeure*, accident, misuse, intentional and unintentional abuse, infill displacement, neglect; or from usage, unintentional or otherwise, that cannot reasonably be considered as normal play or ordinary use of the Product. For purposes of this Warranty, normal play and ordinary use shall mean usage up to 3,000 hours per year of regular play and utilization for the sporting activities provided herein; normal play and ordinary use also includes a reasonable number of users or participants, but does not include repetitive marching, repetitive training or high-intensity drills on the same part of the field, especially in the areas including, but not limited to, home plate, pitcher's mound, base areas, base paths, soccer penalty mark/spot areas, goal areas, sideline areas and lacrosse crease areas, all of which require frequent maintenance in accordance with FieldTurf Maintenance Guidelines and which may require regular replacement. This Warranty is expressly conditioned upon the Customer completing and submitting the FieldTurf Maintenance Log provided in FieldTurf's Maintenance Guidelines.

2. Damage resulting from failure to maintain the Product in accordance with FieldTurf's Maintenance Guidelines provided to the Purchaser. The Purchaser shall keep a log of all maintenance performed on the Product and supply FieldTurf with a copy upon request. Purchaser acknowledges that organic infill systems such as those in the *PureFill* product require specialized maintenance and care and given the nature of FieldTurf's *PureFill* product, this Warranty shall be conditioned upon the Purchaser carrying out regular *PureFill*-specific field maintenance as specified in FieldTurf's applicable maintenance manuals/guidelines and upon maintaining written logs showing

SAMPLE

FieldTurf
A Tarkett Sports Company

Manufacturer's Limited Warranty

same. Purchaser understands the particular *PureFill* requirements for maintaining proper infill levels and agrees, as necessary, to undertake responsibility for infill replenishment and maintenance anywhere infill is naturally displaced. The Purchaser also acknowledges that the characteristics of the *PureFill* materials may result in naturally occurring changes, including but not limited to, color and appearance of the materials within the infill layers; accordingly and without limitation, *PureFill* is subject to a change in color which usually presents as a darker surface color, but which will not affect the performance of the field

3. Damage resulting from repair, attempted repair and/or maintenance by anyone other than FieldTurf, an authorized FieldTurf distributor or an authorized FieldTurf maintainer.
4. Damage due to causes which include, but are not limited to, the application of chemicals and/or cleaning agents, adhesive backing, dirt, traffic, negligence, vandalism, fire, flood, windstorm, animals, improper care and Acts of God.
5. Failure and/or improper design of the base; depression of the soil, subsurface or other matter upon which the base or Product rests; and any and all resulting damage to the Product arising therefrom.
6. FieldTurf does not warrant the percolation rate, long term planarity and/or compaction of the base which the product is installed. **FIELDTURF DISCLAIMS ALL WARRANTIES AS TO THE BASE, EXPRESS OR IMPLIED, AND ANY AND ALL RESULTING DAMAGE TO THE PRODUCT ARISING THEREFROM**.
7. Damage resulting from the use of improper footwear such as long-spiked track shoes, regular and repeated use of steel cleats, and flat-soled shoes. Standard molded soccer or football cleats are recommended.
8. Damage resulting from the inadequate installation, improper maintenance and/or other failure of any third-party shock pad or underlayment pad installed beneath the Product, including, but not limited to, detachment of the Product caused by expansion and/or contraction of the third party shock pad or underlayment pad.

All synthetic turf is subject to normal wear and tear, which does not constitute a manufacturing defect and is not covered by this Warranty. In addition to the other factors listed in this Warranty and without limitation, the extent of the wear and tear depends on the construction of synthetic turf (fiber face weight, stitch rate, fiber pile height and gauge, infill components and maintenance of the field) and the intensity of use of the synthetic turf. The synthetic turf will be stable to light fading with the maximum fading of the synthetic turf during the Warranty period not to exceed fifteen percent (15%) of color loss annually based upon an acceptable grey scale. This Warranty does not cover slight variations or gradations of color within the Product and/or face distortion. Normal behavior of the fiber and infill with respect to the wear pattern of a field is more fully explained in the "Field Settling" document, provided in the FieldTurf After-Sales Service Package and the PureFill "*What to Look Out For*" Handout attached herein as **Appendix 1**.

FieldTurf disclaims all liability for incidental and consequential damages for breach of any express or implied warranty, including any implied warranty of merchantability, with respect to the Product. In the event that the Product be used for purposes other than the sporting activities provided herein or for any other uses for which FieldTurf has provided its written authorization, FieldTurf shall not be responsible for damages resulting therefrom and, therefore, this Warranty, as well as any and all applicable legal warranties, shall become **null and void** as Purchaser understands that FieldTurf has tested the Product for use in connection with the said sporting activities and/or uses, and that it may not have tested the Product for other such uses. Any Product repairs or replacements performed under the terms of this Warranty shall not extend the term of this Warranty.

Name of Purchaser:	**CLIENT NAME**	*Sporting Activities:*	Multi-Sport Use
Date of Completion:		*Installed by:*	FieldTurf USA, Inc.
Location:		*City:*	
Address:		*Zip:*	
State:		*Fax/email:*	
Tel:			
Signature:		*Name :*	Darren Gill
Date:		*Reference:*	8800

SAMPLE

FieldTurf
A Tarkett Sports Company

Manufacturer's Limited Warranty

Appendix 1

FieldTurf®
A Tarkett Sports Company

SUSTAIN THE GAME

PureFill

WHAT TO LOOK OUT FOR

OUR SYSTEMS WITH PUREFILL INFILL REQUIRE THE CARE AND MAINTENANCE YOU WOULD EXPECT TO GIVE TO A SYNTHETIC TURF FIELD, BUT THERE ARE SOME SPECIFICS THAT YOU SHOULD B E AWARE OF:

THE FIRST MONTHS AFTER INSTALLATION

It will normally take several months for the infill to fully settle between the grass filaments and some 'static cling' of the natural infill to the synthetic turf fiber is normal. Regular maintenance should start immediately after the handover of the field.

REQUIRED MAINTENANCE

PureFill typically requires additional attention and maintenance. Due to its specific weight, some of the infill material is more mobile, especially during extreme weather. Care should be taken to top up and brush as required. It is possible that the infill may displace during heavy rainfall, however it can be easily redistributed once the playing area has dried out. If infill becomes visible on the playing surface, sprinkling with water, or allowing the rain to fall, will settle the infill back into the system. PureFill retains more water than rubber based infills. As a result, depending on the climate, the high moisture content could lend itself to being vulnerable to freezing due to ambient temperature changes. The maintenance activities of Brushing, Aerating, Raking, and Sweeping should be adhered to.

AESTHETICS

PureFill is a natural material with a natural aesthetic and, over time, the look and shape of the infill granules will alter slightly. Typically, the granules will go darker in colour. This is completely normal and does not affect their performance or durability in any way.

NATURAL INFILLS CAN COOL

PureFill acts as a cooling agent within a synthetic turf system – also adding an additional level of comfort during hot periods.

fieldturf.com

This warranty is insured by a third party.

For more information please contact Customer Service at FieldTurf at the number listed below.

7445 Côte-de-Liesse Road Suite 200, Montreal, QC, Canada H4T 1G2 • Toll Free: 1-800-724-2969 •

FieldTurf
A Tarkett Sports Company

Manufacturer's Limited Warranty

FieldTurf warrants that if **FieldTurf COREproduct code *PureFill*** (Product) for multi-sport use synthetic turf proves to be defective in material or installation workmanship, therefore, resulting in premature wear, during normal and ordinary use of the Product for the sporting activities provided herein or for any other uses for which FieldTurf has provided its written authorization, within **ten (10) years** from the date of completion of installation as indicated in this Warranty, FieldTurf shall either repair or replace the affected area of the Product in accordance with the terms of this Warranty. FieldTurf's sole liability under this Warranty shall be limited to either repair or replacement of the affected area of the Product, at its sole discretion, and FieldTurf shall have no other obligations or liabilities with respect to defects of the Product. FieldTurf will, at FieldTurf's option, either repair or replace the affected area to the extent required to meet the Warranty period, but no cash refunds will be made**.** This Warranty shall commence upon the date of completion indicated in this Warranty. The accompanying Warranty service will not come into effect unless and until FieldTurf's Certificate of Completion is sent for validation to the corporate office of FieldTurf indicated herein within thirty (30) days of the date of completion or Purchaser's first use, whichever occurs first. In all cases, the Warranty shall be deemed to commence upon the date of completion indicated in this Warranty. The acceptance form of the terms and conditions contained in FieldTurf's Maintenance Guidelines must also be provided to FieldTurf's corporate office within thirty (30) days of completion of installation. This Warranty is limited to the remedies of repair or replacement, which shall constitute the exclusive remedies available under this Warranty; all other remedies or recourses which might otherwise be available are hereby waived by the Purchaser. FieldTurf will have no other obligations or liability for damages arising out of or in connection with the use or performance of the Product, including, but without limitation, damages for personal injury and/or economic losses. This Warranty shall not come into effect, and FieldTurf shall have no obligations under this Warranty, unless and until FieldTurf is paid in full for the Product to be warranted hereunder.

Field Markings: Football, Soccer

Other Exclusions

EXCEPT AS EXPRESSLY SET FORTH IN THE MANUFACTURER'S LIMITED WARRANTY ABOVE, FIELDTURF DISCLAIMS ALL OTHER WARRANTIES OF ANY KIND, EXPRESS OR IMPLIED, IN FACT OR IN LAW, INCLUDING, BUT NOT LIMITED TO, THE IMPLIED WARRANTIES OF MERCHANTABILITY AND FITNESS FOR A PARTICULAR PURPOSE.

THIS WARRANTY SHALL BECOME NULL AND VOID IF THE PURCHASER FAILS TO MAINTAIN THE FIELD IN ACCORDANCE WITH THE FIELDTURF MAINTENANCE GUIDELINES AND SCHEDULE PROVIDED BY FIELDTURF THEREIN. ALL MAINTENANCE SHALL BE PERFORMED BY FIELDTURF-TRAINED AND/OR FIELDTURF-AUTHORIZED MAINTENANCE PERSONNEL ONLY.

Furthermore, this Manufacturer's Limited Warranty ***does not cover:***

1. Any damage resulting, directly or indirectly, from *force majeure*, accident, misuse, intentional and unintentional abuse, infill displacement, neglect; or from usage, unintentional or otherwise, that cannot reasonably be considered as normal play or ordinary use of the Product. For purposes of this Warranty, normal play and ordinary use shall mean usage up to 3,000 hours per year of regular play and utilization for the sporting activities provided herein; normal play and ordinary use also includes a reasonable number of users or participants, but does not include repetitive marching, repetitive training or high-intensity drills on the same part of the field, especially in the areas including, but not limited to, home plate, pitcher's mound, base areas, base paths, soccer penalty mark/spot areas, goal areas, sideline areas and lacrosse crease areas, all of which require frequent maintenance in accordance with FieldTurf Maintenance Guidelines and which may require regular replacement. This Warranty is expressly conditioned upon the Customer completing and submitting the FieldTurf Maintenance Log provided in FieldTurf's Maintenance Guidelines.
2. Damage resulting from failure to maintain the Product in accordance with FieldTurf's Maintenance Guidelines provided to the Purchaser. The Purchaser shall keep a log of all maintenance performed on the Product and supply FieldTurf with a copy upon request. Purchaser acknowledges that organic infill systems such as those in the *PureFill* product require specialized maintenance and care and given the nature of FieldTurf's *PureFill* product, this Warranty shall be conditioned upon the Purchaser carrying out regular *PureFill*-specific field maintenance as specified in FieldTurf's applicable maintenance manuals/guidelines and upon maintaining written logs showing same. Purchaser understands the particular *PureFill* requirements for maintaining proper infill levels and agrees, as necessary, to undertake responsibility for infill replenishment and maintenance anywhere infill is naturally displaced. The Purchaser also

SAMPLE

FieldTurf
A Tarkett Sports Company

Manufacturer's Limited Warranty

acknowledges that the characteristics of the *PureFill* materials may result in naturally occurring changes, including but not limited to, color and appearance of the materials within the infill layers; accordingly and without limitation, *PureFill* is subject to a change in color which usually presents as a darker surface color, but which will not affect the performance of the field

3. Damage resulting from repair, attempted repair and/or maintenance by anyone other than FieldTurf, an authorized FieldTurf distributor or an authorized FieldTurf maintainer.
4. Damage due to causes which include, but are not limited to, the application of chemicals and/or cleaning agents, adhesive backing, dirt, traffic, negligence, vandalism, fire, flood, windstorm, animals, improper care and Acts of God.
5. Failure and/or improper design of the base; depression of the soil, subsurface or other matter upon which the base or Product rests; and any and all resulting damage to the Product arising therefrom.
6. FieldTurf does not warrant the percolation rate, long term planarity and/or compaction of the base which the product is installed. **FIELDTURF DISCLAIMS ALL WARRANTIES AS TO THE BASE, EXPRESS OR IMPLIED, AND ANY AND ALL RESULTING DAMAGE TO THE PRODUCT ARISING THEREFROM**.
7. Damage resulting from the use of improper footwear such as long-spiked track shoes, regular and repeated use of steel cleats, and flat-soled shoes. Standard molded soccer or football cleats are recommended.
8. Damage resulting from the inadequate installation, improper maintenance and/or other failure of any third-party shock pad or underlayment pad installed beneath the Product, including, but not limited to, detachment of the Product caused by expansion and/or contraction of the third party shock pad or underlayment pad.

All synthetic turf is subject to normal wear and tear, which does not constitute a manufacturing defect and is not covered by this Warranty. In addition to the other factors listed in this Warranty and without limitation, the extent of the wear and tear depends on the construction of synthetic turf (fiber face weight, stitch rate, fiber pile height and gauge, infill components and maintenance of the field) and the intensity of use of the synthetic turf. The synthetic turf will be stable to light fading with the maximum fading of the synthetic turf during the Warranty period not to exceed fifteen percent (15%) of color loss annually based upon an acceptable grey scale. This Warranty does not cover slight variations or gradations of color within the Product and/or face distortion. Normal behavior of the fiber and infill with respect to the wear pattern of a field is more fully explained in the "Field Settling" document, provided in the FieldTurf After-Sales Service Package and the PureFill "*What to Look Out For*" Handout attached herein as **Appendix 1**.

FieldTurf disclaims all liability for incidental and consequential damages for breach of any express or implied warranty, including any implied warranty of merchantability, with respect to the Product. In the event that the Product be used for purposes other than the sporting activities provided herein or for any other uses for which FieldTurf has provided its written authorization, FieldTurf shall not be responsible for damages resulting therefrom and, therefore, this Warranty, as well as any and all applicable legal warranties, shall become **null and void** as Purchaser understands that FieldTurf has tested the Product for use in connection with the said sporting activities and/or uses, and that it may not have tested the Product for other such uses. Any Product repairs or replacements performed under the terms of this Warranty shall not extend the term of this Warranty.

Name of Purchaser:	**CLIENT NAME**	*Sporting Activities:*	Multi-Sport Use
Date of Completion:		*Installed by:*	FieldTurf USA, Inc.
Location:		*City:*	
Address:		*Zip:*	
State:		*Fax/email:*	
Tel:			
Signature:		*Name :*	Darren Gill
Date:		*Reference:*	8800

SAMPLE

FieldTurf
A Tarkett Sports Company

Manufacturer's Limited Warranty

Appendix 1

FieldTurf®
A Tarkett Sports Company

SUSTAIN THE GAME

PureFill

WHAT TO LOOK OUT FOR

OUR SYSTEMS WITH PUREFILL INFILL REQUIRE THE CARE AND MAINTENANCE YOU WOULD EXPECT TO GIVE TO A SYNTHETIC TURF FIELD, BUT THERE ARE SOME SPECIFICS THAT YOU SHOULD B E AWARE OF:

THE FIRST MONTHS AFTER INSTALLATION

It will normally take several months for the infill to fully settle between the grass filaments and some 'static cling' of the natural infill to the synthetic turf fiber is normal. Regular maintenance should start immediately after the handover of the field.

REQUIRED MAINTENANCE

PureFill typically requires additional attention and maintenance. Due to its specific weight, some of the infill material is more mobile, especially during extreme weather. Care should be taken to top up and brush as required. It is possible that the infill may displace during heavy rainfall, however it can be easily redistributed once the playing area has dried out. If infill becomes visible on the playing surface, sprinkling with water, or allowing the rain to fall, will settle the infill back into the system. PureFill retains more water than rubber based infills. As a result, depending on the climate, the high moisture content could lend itself to being vulnerable to freezing due to ambient temperature changes. The maintenance activities of Brushing, Aerating, Raking, and Sweeping should be adhered to.

AESTHETICS

PureFill is a natural material with a natural aesthetic and, over time, the look and shape of the infill granules will alter slightly. Typically, the granules will go darker in colour. This is completely normal and does not affect their performance or durability in any way.

NATURAL INFILLS CAN COOL

PureFill acts as a cooling agent within a synthetic turf system – also adding an additional level of comfort during hot periods.

fieldturf.com

This warranty is insured by a third party.

For more information please contact Customer Service at FieldTurf at the number listed below.

7445 Côte-de-Liesse Road Suite 200, Montreal, QC, Canada H4T 1G2 • Toll Free: 1-800-724-2969 •

FieldTurf
A Tarkett Sports Company

Manufacturer's Limited Warranty

FieldTurf warrants that if **FieldTurf product code *PureSelect*** (Product) for multi-sport use synthetic turf proves to be defective in material or installation workmanship, therefore, resulting in premature wear, during normal and ordinary use of the Product for the sporting activities provided herein or for any other uses for which FieldTurf has provided its written authorization, within **eight (8) years** from the date of completion of installation as indicated in this Warranty, FieldTurf shall either repair or replace the affected area of the Product in accordance with the terms of this Warranty. FieldTurf's sole liability under this Warranty shall be limited to either repair or replacement of the affected area of the Product, at its sole discretion, and FieldTurf shall have no other obligations or liabilities with respect to defects of the Product. FieldTurf will, at FieldTurf's option, either repair or replace the affected area to the extent required to meet the Warranty period, but no cash refunds will be made**.** FieldTurf warrants that all materials installed meet or exceed the product specifications and further warrants that replacement material will be available through the Warranty period. FieldTurf will verify that their representative has inspected the installation and that the work conforms to FieldTurf's requirements and further warrants that the installation was done in accordance with both FieldTurf's recommendations and any written directives of FieldTurf's representative. This Warranty shall commence upon the date of completion indicated in this Warranty. The accompanying Warranty service will not come into effect unless and until FieldTurf's Certificate of Completion is sent for validation to the corporate office of FieldTurf indicated herein within thirty (30) days of the date of completion or Purchaser's first use, whichever occurs first. In all cases, the Warranty shall be deemed to commence upon the date of completion indicated in this Warranty. The acceptance form of the terms and conditions contained in FieldTurf's Maintenance Guidelines must also be provided to FieldTurf's corporate office within thirty (30) days of completion of installation. FieldTurf warrants that the G-max shall maintain a value (option 1: below one hundred thirty-five (135) at installation and no greater than one hundred eight-five (185)) or option 2: (that shall not exceed two hundred (200)) for the duration of the warranty, as per ASTM 1936 and F-355 standards, providing that the customer has performed the regular maintenance as outlined in the maintenance guidelines. This Warranty is limited to the remedies of repair or replacement, which shall constitute the exclusive remedies available under this Warranty; all other remedies or recourses which might otherwise be available are hereby waived by the Purchaser. FieldTurf will have no other obligations or liability for damages arising out of or in connection with the use or performance of the Product, including, but without limitation, damages for personal injury and/or economic losses. This Warranty shall not come into effect, and FieldTurf shall have no obligations under this Warranty, unless and until FieldTurf is paid in full for the Product to be warranted hereunder.

Field Markings: Football, Soccer

Other Exclusions

EXCEPT AS EXPRESSLY SET FORTH IN THE MANUFACTURER'S LIMITED WARRANTY ABOVE, FIELDTURF DISCLAIMS ALL OTHER WARRANTIES OF ANY KIND, EXPRESS OR IMPLIED, IN FACT OR IN LAW, INCLUDING, BUT NOT LIMITED TO, THE IMPLIED WARRANTIES OF MERCHANTABILITY AND FITNESS FOR A PARTICULAR PURPOSE.

THIS WARRANTY SHALL BECOME NULL AND VOID IF THE PURCHASER FAILS TO MAINTAIN THE FIELD IN ACCORDANCE WITH THE FIELDTURF MAINTENANCE GUIDELINES AND SCHEDULE PROVIDED BY FIELDTURF THEREIN. ALL MAINTENANCE SHALL BE PERFORMED BY FIELDTURF-TRAINED AND/OR FIELDTURF-AUTHORIZED MAINTENANCE PERSONNEL ONLY.

Furthermore, this Manufacturer's Limited Warranty ***does not cover****:*

1. Any damage resulting, directly or indirectly, from *force majeure*, accident, misuse, intentional and unintentional abuse, infill displacement, neglect; or from usage, unintentional or otherwise, that cannot reasonably be considered as normal play or ordinary use of the Product. For purposes of this Warranty, normal play and ordinary use shall mean usage up to 3,000 hours per year of regular play and utilization for the sporting activities provided herein; normal play and ordinary use also includes a reasonable number of users or participants, but does not include repetitive marching, repetitive training or high-intensity drills on the same part of the field, especially in the areas including, but not limited to, home plate, pitcher's mound, base areas, base paths, soccer penalty mark/spot areas, goal areas, sideline areas and lacrosse crease areas, all of which require frequent maintenance in accordance with FieldTurf Maintenance Guidelines and which may require regular replacement. This Warranty is expressly conditioned upon the Customer completing and submitting the FieldTurf Maintenance Log provided in FieldTurf's Maintenance Guidelines.

2. Damage resulting from failure to maintain the Product in accordance with FieldTurf's Maintenance Guidelines provided to the Purchaser. The Purchaser shall keep a log of all maintenance performed on the Product and supply FieldTurf with a copy upon request. Purchaser acknowledges that organic infill systems such as those in the *PureSelect* product require specialized maintenance and care and given the nature of FieldTurf's *PureSelect* product, this Warranty shall be conditioned upon the Purchaser carrying out regular *PureSelect*-specific field maintenance as specified in FieldTurf's applicable maintenance manuals/guidelines and upon maintaining written

SAMPLE

FieldTurf
A Tarkett Sports Company

Manufacturer's Limited Warranty

logs showing same. Purchaser understands the particular *PureSelect* requirements for maintaining proper infill levels and agrees, as necessary, to undertake responsibility for infill replenishment and maintenance anywhere infill is naturally displaced. The Purchaser also acknowledges that the characteristics of the *PureSelect* materials may result in naturally occurring changes, including but not limited to, color and appearance of the materials within the infill layers; accordingly and without limitation, *PureSelect* is subject to a change in color which usually presents as a darker surface color, but which will not affect the performance of the field

3. Damage resulting from repair, attempted repair and/or maintenance by anyone other than FieldTurf, an authorized FieldTurf distributor or an authorized FieldTurf maintainer.
4. Damage due to causes which include, but are not limited to, the application of chemicals and/or cleaning agents, adhesive backing, dirt, traffic, negligence, vandalism, fire, flood, windstorm, animals, improper care and Acts of God.
5. Failure and/or improper design of the base; depression of the soil, subsurface or other matter upon which the base or Product rests; and any and all resulting damage to the Product arising therefrom.
6. FieldTurf does not warrant the percolation rate, long term planarity and/or compaction of the base which the product is installed. **FIELDTURF DISCLAIMS ALL WARRANTIES AS TO THE BASE, EXPRESS OR IMPLIED, AND ANY AND ALL RESULTING DAMAGE TO THE PRODUCT ARISING THEREFROM**.
7. Damage resulting from the use of improper footwear such as long-spiked track shoes, regular and repeated use of steel cleats, and flat-soled shoes. Standard molded soccer or football cleats are recommended.
8. Damage resulting from the inadequate installation, improper maintenance and/or other failure of any third-party shock pad or underlayment pad installed beneath the Product, including, but not limited to, detachment of the Product caused by expansion and/or contraction of the third-party shock pad or underlayment pad.

All synthetic turf is subject to normal wear and tear, which does not constitute a manufacturing defect and is not covered by this Warranty. In addition to the other factors listed in this Warranty and without limitation, the extent of the wear and tear depends on the construction of synthetic turf (fiber face weight, stitch rate, fiber pile height and gauge, infill components and maintenance of the field) and the intensity of use of the synthetic turf. The synthetic turf will be stable to light fading with the maximum fading of the synthetic turf during the Warranty period not to exceed fifteen percent (15%) of color loss annually based upon an acceptable grey scale. This Warranty does not cover slight variations or gradations of color within the Product and/or face distortion. Normal behavior of the fiber and infill with respect to the wear pattern of a field is more fully explained in the "Field Settling" document, provided in the FieldTurf After-Sales Service Package and the PureSelect "*What to Look Out For*" Handout attached herein as **Appendix 1**.

FieldTurf disclaims all liability for incidental and consequential damages for breach of any express or implied warranty, including any implied warranty of merchantability, with respect to the Product. In the event that the Product be used for purposes other than the sporting activities provided herein or for any other uses for which FieldTurf has provided its written authorization, FieldTurf shall not be responsible for damages resulting therefrom and, therefore, this Warranty, as well as any and all applicable legal warranties, shall become **null and void** as Purchaser understands that FieldTurf has tested the Product for use in connection with the said sporting activities and/or uses, and that it may not have tested the Product for other such uses. Any Product repairs or replacements performed under the terms of this Warranty shall not extend the term of this Warranty.

Name of Purchaser:	**CLIENT NAME**	*Sporting Activities:*	Multi-Sport Use
Date of Completion:		*Installed by:*	FieldTurf USA, Inc.
Location:		*City:*	
Address:		*Zip:*	
State:		*Fax/email:*	
Tel:			
Signature:		*Name :*	
Date:		*Reference:*	

SAMPLE

This warranty is insured by a third party.
For more information please contact Customer Service at FieldTurf at the number listed below.
7445 Côte-de-Liesse Road Suite 200, Montreal, QC, Canada H4T 1G2 • Toll Free: 1-800-724-2969 •

FieldTurf
A Tarkett Sports Company

Manufacturer's Limited Warranty

Appendix 1

FieldTurf®
A Tarkett Sports Company

SUSTAIN THE GAME

PureSelect

WHAT TO LOOK OUT FOR

OUR SYSTEMS WITH PURESELECT INFILL REQUIRE THE CARE AND MAINTENANCE YOU WOULD EXPECT TO GIVE TO A SYNTHETIC TURF FIELD, BUT THERE ARE SOME SPECIFICS THAT YOU SHOULD B E AWARE OF:

THE FIRST MONTHS AFTER INSTALLATION

It will normally take several months for the infill to fully settle between the grass filaments and some 'static cling' of the natural infill to the synthetic turf fiber is normal. Regular maintenance should start immediately after the handover of the field.

REQUIRED MAINTENANCE

PureSelect typically requires additional attention and maintenance. Due to its specific weight, some of the infill material is more mobile, especially during extreme weather. Care should be taken to top up and brush as required. It is possible that the infill may displace during heavy rainfall, however it can be easily redistributed once the playing area has dried out. If infill becomes visible on the playing surface, sprinkling with water, or allowing the rain to fall, will settle the infill back into the system. PureSelect retains more water than rubber based infills. As a result, depending on the climate, the high moisture content could lend itself to being vulnerable to freezing due to ambient temperature changes. The maintenance activities of Brushing, Aerating, Raking, and Sweeping should be adhered to.

AESTHETICS

PureSelect is a natural material with a natural aesthetic and, over time, the look and shape of the infill granules will alter slightly. Typically, the granules will go darker in colour. This is completely normal and does not affect their performance or durability in any way.

NATURAL INFILLS CAN COOL

PureSelect acts as a cooling agent within a synthetic turf system – also adding an additional level of comfort during hot periods.

fieldturf.com

This warranty is insured by a third party.
For more information please contact Customer Service at FieldTurf at the number listed below.
7445 Côte-de-Liesse Road Suite 200, Montreal, QC, Canada H4T 1G2 • Toll Free: 1-800-724-2969 •

FieldTurf
A Tarkett Sports Company

Manufacturer's Limited Warranty

FieldTurf warrants that if **FieldTurf product code *PureSelect*** (Product) for multi-sport use synthetic turf proves to be defective in material or installation workmanship, therefore, resulting in premature wear, during normal and ordinary use of the Product for the sporting activities provided herein or for any other uses for which FieldTurf has provided its written authorization, within **eight (8) years** from the date of completion of installation as indicated in this Warranty, FieldTurf shall either repair or replace the affected area of the Product in accordance with the terms of this Warranty. FieldTurf's sole liability under this Warranty shall be limited to either repair or replacement of the affected area of the Product, at its sole discretion, and FieldTurf shall have no other obligations or liabilities with respect to defects of the Product. FieldTurf will, at FieldTurf's option, either repair or replace the affected area to the extent required to meet the Warranty period, but no cash refunds will be made**.** This Warranty shall commence upon the date of completion indicated in this Warranty. The accompanying Warranty service will not come into effect unless and until FieldTurf's Certificate of Completion is sent for validation to the corporate office of FieldTurf indicated herein within thirty (30) days of the date of completion or Purchaser's first use, whichever occurs first. In all cases, the Warranty shall be deemed to commence upon the date of completion indicated in this Warranty. The acceptance form of the terms and conditions contained in FieldTurf's Maintenance Guidelines must also be provided to FieldTurf's corporate office within thirty (30) days of completion of installation. This Warranty is limited to the remedies of repair or replacement, which shall constitute the exclusive remedies available under this Warranty; all other remedies or recourses which might otherwise be available are hereby waived by the Purchaser. FieldTurf will have no other obligations or liability for damages arising out of or in connection with the use or performance of the Product, including, but without limitation, damages for personal injury and/or economic losses. This Warranty shall not come into effect, and FieldTurf shall have no obligations under this Warranty, unless and until FieldTurf is paid in full for the Product to be warranted hereunder.

Field Markings: Football, Soccer

Other Exclusions

EXCEPT AS EXPRESSLY SET FORTH IN THE MANUFACTURER'S LIMITED WARRANTY ABOVE, FIELDTURF DISCLAIMS ALL OTHER WARRANTIES OF ANY KIND, EXPRESS OR IMPLIED, IN FACT OR IN LAW, INCLUDING, BUT NOT LIMITED TO, THE IMPLIED WARRANTIES OF MERCHANTABILITY AND FITNESS FOR A PARTICULAR PURPOSE.

THIS WARRANTY SHALL BECOME NULL AND VOID IF THE PURCHASER FAILS TO MAINTAIN THE FIELD IN ACCORDANCE WITH THE FIELDTURF MAINTENANCE GUIDELINES AND SCHEDULE PROVIDED BY FIELDTURF THEREIN. ALL MAINTENANCE SHALL BE PERFORMED BY FIELDTURF-TRAINED AND/OR FIELDTURF-AUTHORIZED MAINTENANCE PERSONNEL ONLY.

Furthermore, this Manufacturer's Limited Warranty ***does not cover:***

1. Any damage resulting, directly or indirectly, from *force majeure*, accident, misuse, intentional and unintentional abuse, infill displacement, neglect; or from usage, unintentional or otherwise, that cannot reasonably be considered as normal play or ordinary use of the Product. For purposes of this Warranty, normal play and ordinary use shall mean usage up to 3,000 hours per year of regular play and utilization for the sporting activities provided herein; normal play and ordinary use also includes a reasonable number of users or participants, but does not include repetitive marching, repetitive training or high-intensity drills on the same part of the field, especially in the areas including, but not limited to, home plate, pitcher's mound, base areas, base paths, soccer penalty mark/spot areas, goal areas, sideline areas and lacrosse crease areas, all of which require frequent maintenance in accordance with FieldTurf Maintenance Guidelines and which may require regular replacement. This Warranty is expressly conditioned upon the Customer completing and submitting the FieldTurf Maintenance Log provided in FieldTurf's Maintenance Guidelines.
2. Damage resulting from failure to maintain the Product in accordance with FieldTurf's Maintenance Guidelines provided to the Purchaser. The Purchaser shall keep a log of all maintenance performed on the Product and supply FieldTurf with a copy upon request. Purchaser acknowledges that organic infill systems such as those in the *PureSelect* product require specialized maintenance and care and given the nature of FieldTurf's *PureSelect* product, this Warranty shall be conditioned upon the Purchaser carrying out regular *PureSelect*-specific field maintenance as specified in FieldTurf's applicable maintenance manuals/guidelines and upon maintaining written logs showing same. Purchaser understands the particular *PureSelect* requirements for maintaining proper infill levels and agrees, as necessary, to undertake responsibility for infill replenishment and maintenance anywhere infill is naturally displaced. The Purchaser also

SAMPLE

Manufacturer's Limited Warranty

acknowledges that the characteristics of the *PureSelect* materials may result in naturally occurring changes, including but not limited to, color and appearance of the materials within the infill layers; accordingly and without limitation, *PureSelect* is subject to a change in color which usually presents as a darker surface color, but which will not affect the performance of the field

3. Damage resulting from repair, attempted repair and/or maintenance by anyone other than FieldTurf, an authorized FieldTurf distributor or an authorized FieldTurf maintainer.
4. Damage due to causes which include, but are not limited to, the application of chemicals and/or cleaning agents, adhesive backing, dirt, traffic, negligence, vandalism, fire, flood, windstorm, animals, improper care and Acts of God.
5. Failure and/or improper design of the base; depression of the soil, subsurface or other matter upon which the base or Product rests; and any and all resulting damage to the Product arising therefrom.
6. FieldTurf does not warrant the percolation rate, long term planarity and/or compaction of the base which the product is installed. **FIELDTURF DISCLAIMS ALL WARRANTIES AS TO THE BASE, EXPRESS OR IMPLIED, AND ANY AND ALL RESULTING DAMAGE TO THE PRODUCT ARISING THEREFROM**.
7. Damage resulting from the use of improper footwear such as long-spiked track shoes, regular and repeated use of steel cleats, and flat-soled shoes. Standard molded soccer or football cleats are recommended.
8. Damage resulting from the inadequate installation, improper maintenance and/or other failure of any third-party shock pad or underlayment pad installed beneath the Product, including, but not limited to, detachment of the Product caused by expansion and/or contraction of the third-party shock pad or underlayment pad.

All synthetic turf is subject to normal wear and tear, which does not constitute a manufacturing defect and is not covered by this Warranty. In addition to the other factors listed in this Warranty and without limitation, the extent of the wear and tear depends on the construction of synthetic turf (fiber face weight, stitch rate, fiber pile height and gauge, infill components and maintenance of the field) and the intensity of use of the synthetic turf. The synthetic turf will be stable to light fading with the maximum fading of the synthetic turf during the Warranty period not to exceed fifteen percent (15%) of color loss annually based upon an acceptable grey scale. This Warranty does not cover slight variations or gradations of color within the Product and/or face distortion. Normal behavior of the fiber and infill with respect to the wear pattern of a field is more fully explained in the "Field Settling" document, provided in the FieldTurf After-Sales Service Package and the PureSelect "*What to Look Out For*" Handout attached herein as **Appendix 1**.

FieldTurf disclaims all liability for incidental and consequential damages for breach of any express or implied warranty, including any implied warranty of merchantability, with respect to the Product. In the event that the Product be used for purposes other than the sporting activities provided herein or for any other uses for which FieldTurf has provided its written authorization, FieldTurf shall not be responsible for damages resulting therefrom and, therefore, this Warranty, as well as any and all applicable legal warranties, shall become **null and void** as Purchaser understands that FieldTurf has tested the Product for use in connection with the said sporting activities and/or uses, and that it may not have tested the Product for other such uses. Any Product repairs or replacements performed under the terms of this Warranty shall not extend the term of this Warranty.

Name of Purchaser:	**CLIENT NAME**	*Sporting Activities:*	Multi-Sport Use
Date of Completion:		*Installed by:*	FieldTurf USA, Inc.
Location:		*City:*	
Address:		*Zip:*	
State:		*Fax/email:*	
Tel:			
Signature:		*Name :*	
Date:		*Reference:*	

SAMPLE

FieldTurf
A Tarkett Sports Company

Manufacturer's Limited Warranty

Appendix 1

FieldTurf®
A Tarkett Sports Company

SUSTAIN THE GAME

PureSelect

WHAT TO LOOK OUT FOR

OUR SYSTEMS WITH PURESELECT INFILL REQUIRE THE CARE AND MAINTENANCE YOU WOULD EXPECT TO GIVE TO A SYNTHETIC TURF FIELD, BUT THERE ARE SOME SPECIFICS THAT YOU SHOULD B E AWARE OF:

THE FIRST MONTHS AFTER INSTALLATION

It will normally take several months for the infill to fully settle between the grass filaments and some 'static cling' of the natural infill to the synthetic turf fiber is normal. Regular maintenance should start immediately after the handover of the field.

REQUIRED MAINTENANCE

PureSelect typically requires additional attention and maintenance. Due to its specific weight, some of the infill material is more mobile, especially during extreme weather. Care should be taken to top up and brush as required. It is possible that the infill may displace during heavy rainfall, however it can be easily redistributed once the playing area has dried out. If infill becomes visible on the playing surface, sprinkling with water, or allowing the rain to fall, will settle the infill back into the system. PureSelect retains more water than rubber based infills. As a result, depending on the climate, the high moisture content could lend itself to being vulnerable to freezing due to ambient temperature changes. The maintenance activities of Brushing, Aerating, Raking, and Sweeping should be adhered to.

AESTHETICS

PureSelect is a natural material with a natural aesthetic and, over time, the look and shape of the infill granules will alter slightly. Typically, the granules will go darker in colour. This is completely normal and does not affect their performance or durability in any way.

NATURAL INFILLS CAN COOL

PureSelect acts as a cooling agent within a synthetic turf system – also adding an additional level of comfort during hot periods.

fieldturf.com

This warranty is insured by a third party.
For more information please contact Customer Service at FieldTurf at the number listed below.
7445 Côte-de-Liesse Road Suite 200, Montreal, QC, Canada H4T 1G2 • Toll Free: 1-800-724-2969 •

FieldTurf
A Tarkett Sports Company

Manufacturer's Limited Warranty

FieldTurf warrants that if **FieldTurf COREproduct code *PureSelect*** (Product) for multi-sport use synthetic turf proves to be defective in material or installation workmanship, therefore, resulting in premature wear, during normal and ordinary use of the Product for the sporting activities provided herein or for any other uses for which FieldTurf has provided its written authorization, within **ten (10) years** from the date of completion of installation as indicated in this Warranty, FieldTurf shall either repair or replace the affected area of the Product in accordance with the terms of this Warranty. FieldTurf's sole liability under this Warranty shall be limited to either repair or replacement of the affected area of the Product, at its sole discretion, and FieldTurf shall have no other obligations or liabilities with respect to defects of the Product. FieldTurf will, at FieldTurf's option, either repair or replace the affected area to the extent required to meet the Warranty period, but no cash refunds will be made**.** FieldTurf warrants that all materials installed meet or exceed the product specifications and further warrants that replacement material will be available through the Warranty period. FieldTurf will verify that their representative has inspected the installation and that the work conforms to FieldTurf's requirements and further warrants that the installation was done in accordance with both FieldTurf's recommendations and any written directives of FieldTurf's representative. This Warranty shall commence upon the date of completion indicated in this Warranty. The accompanying Warranty service will not come into effect unless and until FieldTurf's Certificate of Completion is sent for validation to the corporate office of FieldTurf indicated herein within thirty (30) days of the date of completion or Purchaser's first use, whichever occurs first. In all cases, the Warranty shall be deemed to commence upon the date of completion indicated in this Warranty. The acceptance form of the terms and conditions contained in FieldTurf's Maintenance Guidelines must also be provided to FieldTurf's corporate office within thirty (30) days of completion of installation. FieldTurf warrants that the G-max shall maintain a value (option 1: below one hundred thirty-five (135) at installation and no greater than one hundred eight-five (185)) or option 2: (that shall not exceed two hundred (200)) for the duration of the warranty, as per ASTM 1936 and F-355 standards, providing that the customer has performed the regular maintenance as outlined in the maintenance guidelines. This Warranty is limited to the remedies of repair or replacement, which shall constitute the exclusive remedies available under this Warranty; all other remedies or recourses which might otherwise be available are hereby waived by the Purchaser. FieldTurf will have no other obligations or liability for damages arising out of or in connection with the use or performance of the Product, including, but without limitation, damages for personal injury and/or economic losses. This Warranty shall not come into effect, and FieldTurf shall have no obligations under this Warranty, unless and until FieldTurf is paid in full for the Product to be warranted hereunder.

Field Markings: Football, Soccer

Other Exclusions

EXCEPT AS EXPRESSLY SET FORTH IN THE MANUFACTURER'S LIMITED WARRANTY ABOVE, FIELDTURF DISCLAIMS ALL OTHER WARRANTIES OF ANY KIND, EXPRESS OR IMPLIED, IN FACT OR IN LAW, INCLUDING, BUT NOT LIMITED TO, THE IMPLIED WARRANTIES OF MERCHANTABILITY AND FITNESS FOR A PARTICULAR PURPOSE.

THIS WARRANTY SHALL BECOME NULL AND VOID IF THE PURCHASER FAILS TO MAINTAIN THE FIELD IN ACCORDANCE WITH THE FIELDTURF MAINTENANCE GUIDELINES AND SCHEDULE PROVIDED BY FIELDTURF THEREIN. ALL MAINTENANCE SHALL BE PERFORMED BY FIELDTURF-TRAINED AND/OR FIELDTURF-AUTHORIZED MAINTENANCE PERSONNEL ONLY.

Furthermore, this Manufacturer's Limited Warranty ***does not cover****:*

1. Any damage resulting, directly or indirectly, from *force majeure*, accident, misuse, intentional and unintentional abuse, infill displacement, neglect; or from usage, unintentional or otherwise, that cannot reasonably be considered as normal play or ordinary use of the Product. For purposes of this Warranty, normal play and ordinary use shall mean usage up to 3,000 hours per year of regular play and utilization for the sporting activities provided herein; normal play and ordinary use also includes a reasonable number of users or participants, but does not include repetitive marching, repetitive training or high-intensity drills on the same part of the field, especially in the areas including, but not limited to, home plate, pitcher's mound, base areas, base paths, soccer penalty mark/spot areas, goal areas, sideline areas and lacrosse crease areas, all of which require frequent maintenance in accordance with FieldTurf Maintenance Guidelines and which may require regular replacement. This Warranty is expressly conditioned upon the Customer completing and submitting the FieldTurf Maintenance Log provided in FieldTurf's Maintenance Guidelines.

2. Damage resulting from failure to maintain the Product in accordance with FieldTurf's Maintenance Guidelines provided to the Purchaser. The Purchaser shall keep a log of all maintenance performed on the Product and supply FieldTurf with a copy upon request. Purchaser acknowledges that organic infill systems such as those in the *PureSelect* product require specialized maintenance and care and given the nature of FieldTurf's *PureSelect* product, this Warranty shall be conditioned upon the Purchaser carrying out regular *PureSelect*-specific field maintenance as specified in FieldTurf's applicable maintenance manuals/guidelines and upon maintaining written

SAMPLE

FieldTurf
A Tarkett Sports Company

Manufacturer's Limited Warranty

logs showing same. Purchaser understands the particular *PureSelect* requirements for maintaining proper infill levels and agrees, as necessary, to undertake responsibility for infill replenishment and maintenance anywhere infill is naturally displaced. The Purchaser also acknowledges that the characteristics of the *PureSelect* materials may result in naturally occurring changes, including but not limited to, color and appearance of the materials within the infill layers; accordingly and without limitation, *PureSelect* is subject to a change in color which usually presents as a darker surface color, but which will not affect the performance of the field

3. Damage resulting from repair, attempted repair and/or maintenance by anyone other than FieldTurf, an authorized FieldTurf distributor or an authorized FieldTurf maintainer.
4. Damage due to causes which include, but are not limited to, the application of chemicals and/or cleaning agents, adhesive backing, dirt, traffic, negligence, vandalism, fire, flood, windstorm, animals, improper care and Acts of God.
5. Failure and/or improper design of the base; depression of the soil, subsurface or other matter upon which the base or Product rests; and any and all resulting damage to the Product arising therefrom.
6. FieldTurf does not warrant the percolation rate, long term planarity and/or compaction of the base which the product is installed. **FIELDTURF DISCLAIMS ALL WARRANTIES AS TO THE BASE, EXPRESS OR IMPLIED, AND ANY AND ALL RESULTING DAMAGE TO THE PRODUCT ARISING THEREFROM**.
7. Damage resulting from the use of improper footwear such as long-spiked track shoes, regular and repeated use of steel cleats, and flat-soled shoes. Standard molded soccer or football cleats are recommended.
8. Damage resulting from the inadequate installation, improper maintenance and/or other failure of any third-party shock pad or underlayment pad installed beneath the Product, including, but not limited to, detachment of the Product caused by expansion and/or contraction of the third-party shock pad or underlayment pad.

All synthetic turf is subject to normal wear and tear, which does not constitute a manufacturing defect and is not covered by this Warranty. In addition to the other factors listed in this Warranty and without limitation, the extent of the wear and tear depends on the construction of synthetic turf (fiber face weight, stitch rate, fiber pile height and gauge, infill components and maintenance of the field) and the intensity of use of the synthetic turf. The synthetic turf will be stable to light fading with the maximum fading of the synthetic turf during the Warranty period not to exceed fifteen percent (15%) of color loss annually based upon an acceptable grey scale. This Warranty does not cover slight variations or gradations of color within the Product and/or face distortion. Normal behavior of the fiber and infill with respect to the wear pattern of a field is more fully explained in the "Field Settling" document, provided in the FieldTurf After-Sales Service Package and the PureSelect "*What to Look Out For*" Handout attached herein as **Appendix 1**.

FieldTurf disclaims all liability for incidental and consequential damages for breach of any express or implied warranty, including any implied warranty of merchantability, with respect to the Product. In the event that the Product be used for purposes other than the sporting activities provided herein or for any other uses for which FieldTurf has provided its written authorization, FieldTurf shall not be responsible for damages resulting therefrom and, therefore, this Warranty, as well as any and all applicable legal warranties, shall become **null and void** as Purchaser understands that FieldTurf has tested the Product for use in connection with the said sporting activities and/or uses, and that it may not have tested the Product for other such uses. Any Product repairs or replacements performed under the terms of this Warranty shall not extend the term of this Warranty.

Name of Purchaser:	**CLIENT NAME**	*Sporting Activities:*	Multi-Sport Use
Date of Completion:		*Installed by:*	FieldTurf USA, Inc.
Location:		*City:*	
Address:		*Zip:*	
State:		*Fax/email:*	
Tel:			
Signature:		*Name :*	
Date:		*Reference:*	

SAMPLE

This warranty is insured by a third party.
For more information please contact Customer Service at FieldTurf at the number listed below.
7445 Côte-de-Liesse Road Suite 200, Montreal, QC, Canada H4T 1G2 • Toll Free: 1-800-724-2969 •

FieldTurf
A Tarkett Sports Company

Manufacturer's Limited Warranty

Appendix 1

FieldTurf®
A Tarkett Sports Company

SUSTAIN THE GAME

PureSelect

WHAT TO LOOK OUT FOR

OUR SYSTEMS WITH PURESELECT INFILL REQUIRE THE CARE AND MAINTENANCE YOU WOULD EXPECT TO GIVE TO A SYNTHETIC TURF FIELD, BUT THERE ARE SOME SPECIFICS THAT YOU SHOULD B E AWARE OF:

THE FIRST MONTHS AFTER INSTALLATION

It will normally take several months for the infill to fully settle between the grass filaments and some 'static cling' of the natural infill to the synthetic turf fiber is normal. Regular maintenance should start immediately after the handover of the field.

REQUIRED MAINTENANCE

PureSelect typically requires additional attention and maintenance. Due to its specific weight, some of the infill material is more mobile, especially during extreme weather. Care should be taken to top up and brush as required. It is possible that the infill may displace during heavy rainfall, however it can be easily redistributed once the playing area has dried out. If infill becomes visible on the playing surface, sprinkling with water, or allowing the rain to fall, will settle the infill back into the system. PureSelect retains more water than rubber based infills. As a result, depending on the climate, the high moisture content could lend itself to being vulnerable to freezing due to ambient temperature changes. The maintenance activities of Brushing, Aerating, Raking, and Sweeping should be adhered to.

AESTHETICS

PureSelect is a natural material with a natural aesthetic and, over time, the look and shape of the infill granules will alter slightly. Typically, the granules will go darker in colour. This is completely normal and does not affect their performance or durability in any way.

NATURAL INFILLS CAN COOL

PureSelect acts as a cooling agent within a synthetic turf system – also adding an additional level of comfort during hot periods.

fieldturf.com

This warranty is insured by a third party.
For more information please contact Customer Service at FieldTurf at the number listed below.
7445 Côte-de-Liesse Road Suite 200, Montreal, QC, Canada H4T 1G2 • Toll Free: 1-800-724-2969 •

FieldTurf
A Tarkett Sports Company

Manufacturer's Limited Warranty

FieldTurf warrants that if **FieldTurf COREproduct code *PureSelect*** (Product) for multi-sport use synthetic turf proves to be defective in material or installation workmanship, therefore, resulting in premature wear, during normal and ordinary use of the Product for the sporting activities provided herein or for any other uses for which FieldTurf has provided its written authorization, within **ten (10) years** from the date of completion of installation as indicated in this Warranty, FieldTurf shall either repair or replace the affected area of the Product in accordance with the terms of this Warranty. FieldTurf's sole liability under this Warranty shall be limited to either repair or replacement of the affected area of the Product, at its sole discretion, and FieldTurf shall have no other obligations or liabilities with respect to defects of the Product. FieldTurf will, at FieldTurf's option, either repair or replace the affected area to the extent required to meet the Warranty period, but no cash refunds will be made**.** This Warranty shall commence upon the date of completion indicated in this Warranty. The accompanying Warranty service will not come into effect unless and until FieldTurf's Certificate of Completion is sent for validation to the corporate office of FieldTurf indicated herein within thirty (30) days of the date of completion or Purchaser's first use, whichever occurs first. In all cases, the Warranty shall be deemed to commence upon the date of completion indicated in this Warranty. The acceptance form of the terms and conditions contained in FieldTurf's Maintenance Guidelines must also be provided to FieldTurf's corporate office within thirty (30) days of completion of installation. This Warranty is limited to the remedies of repair or replacement, which shall constitute the exclusive remedies available under this Warranty; all other remedies or recourses which might otherwise be available are hereby waived by the Purchaser. FieldTurf will have no other obligations or liability for damages arising out of or in connection with the use or performance of the Product, including, but without limitation, damages for personal injury and/or economic losses. This Warranty shall not come into effect, and FieldTurf shall have no obligations under this Warranty, unless and until FieldTurf is paid in full for the Product to be warranted hereunder.

Field Markings: Football, Soccer

Other Exclusions

EXCEPT AS EXPRESSLY SET FORTH IN THE MANUFACTURER'S LIMITED WARRANTY ABOVE, FIELDTURF DISCLAIMS ALL OTHER WARRANTIES OF ANY KIND, EXPRESS OR IMPLIED, IN FACT OR IN LAW, INCLUDING, BUT NOT LIMITED TO, THE IMPLIED WARRANTIES OF MERCHANTABILITY AND FITNESS FOR A PARTICULAR PURPOSE.

THIS WARRANTY SHALL BECOME NULL AND VOID IF THE PURCHASER FAILS TO MAINTAIN THE FIELD IN ACCORDANCE WITH THE FIELDTURF MAINTENANCE GUIDELINES AND SCHEDULE PROVIDED BY FIELDTURF THEREIN. ALL MAINTENANCE SHALL BE PERFORMED BY FIELDTURF-TRAINED AND/OR FIELDTURF-AUTHORIZED MAINTENANCE PERSONNEL ONLY.

Furthermore, this Manufacturer's Limited Warranty ***does not cover****:*

1. Any damage resulting, directly or indirectly, from *force majeure*, accident, misuse, intentional and unintentional abuse, infill displacement, neglect; or from usage, unintentional or otherwise, that cannot reasonably be considered as normal play or ordinary use of the Product. For purposes of this Warranty, normal play and ordinary use shall mean usage up to 3,000 hours per year of regular play and utilization for the sporting activities provided herein; normal play and ordinary use also includes a reasonable number of users or participants, but does not include repetitive marching, repetitive training or high-intensity drills on the same part of the field, especially in the areas including, but not limited to, home plate, pitcher's mound, base areas, base paths, soccer penalty mark/spot areas, goal areas, sideline areas and lacrosse crease areas, all of which require frequent maintenance in accordance with FieldTurf Maintenance Guidelines and which may require regular replacement. This Warranty is expressly conditioned upon the Customer completing and submitting the FieldTurf Maintenance Log provided in FieldTurf's Maintenance Guidelines.
2. Damage resulting from failure to maintain the Product in accordance with FieldTurf's Maintenance Guidelines provided to the Purchaser. The Purchaser shall keep a log of all maintenance performed on the Product and supply FieldTurf with a copy upon request. Purchaser acknowledges that organic infill systems such as those in the *PureSelect* product require specialized maintenance and care and given the nature of FieldTurf's *PureSelect* product, this Warranty shall be conditioned upon the Purchaser carrying out regular *PureSelect*-specific field maintenance as specified in FieldTurf's applicable maintenance manuals/guidelines and upon maintaining written logs showing same. Purchaser understands the particular *PureSelect* requirements for maintaining proper infill levels and agrees, as necessary, to undertake responsibility for infill replenishment and maintenance anywhere infill is naturally displaced. The Purchaser also

SAMPLE

FieldTurf
A Tarkett Sports Company

Manufacturer's Limited Warranty

acknowledges that the characteristics of the *PureSelect* materials may result in naturally occurring changes, including but not limited to, color and appearance of the materials within the infill layers; accordingly and without limitation, *PureSelect* is subject to a change in color which usually presents as a darker surface color, but which will not affect the performance of the field

3. Damage resulting from repair, attempted repair and/or maintenance by anyone other than FieldTurf, an authorized FieldTurf distributor or an authorized FieldTurf maintainer.
4. Damage due to causes which include, but are not limited to, the application of chemicals and/or cleaning agents, adhesive backing, dirt, traffic, negligence, vandalism, fire, flood, windstorm, animals, improper care and Acts of God.
5. Failure and/or improper design of the base; depression of the soil, subsurface or other matter upon which the base or Product rests; and any and all resulting damage to the Product arising therefrom.
6. FieldTurf does not warrant the percolation rate, long term planarity and/or compaction of the base which the product is installed. **FIELDTURF DISCLAIMS ALL WARRANTIES AS TO THE BASE, EXPRESS OR IMPLIED, AND ANY AND ALL RESULTING DAMAGE TO THE PRODUCT ARISING THEREFROM**.
7. Damage resulting from the use of improper footwear such as long-spiked track shoes, regular and repeated use of steel cleats, and flat-soled shoes. Standard molded soccer or football cleats are recommended.
8. Damage resulting from the inadequate installation, improper maintenance and/or other failure of any third-party shock pad or underlayment pad installed beneath the Product, including, but not limited to, detachment of the Product caused by expansion and/or contraction of the third-party shock pad or underlayment pad.

All synthetic turf is subject to normal wear and tear, which does not constitute a manufacturing defect and is not covered by this Warranty. In addition to the other factors listed in this Warranty and without limitation, the extent of the wear and tear depends on the construction of synthetic turf (fiber face weight, stitch rate, fiber pile height and gauge, infill components and maintenance of the field) and the intensity of use of the synthetic turf. The synthetic turf will be stable to light fading with the maximum fading of the synthetic turf during the Warranty period not to exceed fifteen percent (15%) of color loss annually based upon an acceptable grey scale. This Warranty does not cover slight variations or gradations of color within the Product and/or face distortion. Normal behavior of the fiber and infill with respect to the wear pattern of a field is more fully explained in the "Field Settling" document, provided in the FieldTurf After-Sales Service Package and the PureSelect "*What to Look Out For*" Handout attached herein as **Appendix 1**.

FieldTurf disclaims all liability for incidental and consequential damages for breach of any express or implied warranty, including any implied warranty of merchantability, with respect to the Product. In the event that the Product be used for purposes other than the sporting activities provided herein or for any other uses for which FieldTurf has provided its written authorization, FieldTurf shall not be responsible for damages resulting therefrom and, therefore, this Warranty, as well as any and all applicable legal warranties, shall become **null and void** as Purchaser understands that FieldTurf has tested the Product for use in connection with the said sporting activities and/or uses, and that it may not have tested the Product for other such uses. Any Product repairs or replacements performed under the terms of this Warranty shall not extend the term of this Warranty.

Name of Purchaser:	**CLIENT NAME**	*Sporting Activities:*	Multi-Sport Use
Date of Completion:		*Installed by:*	FieldTurf USA, Inc.
Location:		*City:*	
Address:		*Zip:*	
State:		*Fax/email:*	
Tel:			
Signature:		*Name :*	
Date:		*Reference:*	

SAMPLE

FieldTurf
A Tarkett Sports Company

Manufacturer's Limited Warranty

Appendix 1

FieldTurf®
A Tarkett Sports Company

SUSTAIN THE GAME

PureSelect

WHAT TO LOOK OUT FOR

OUR SYSTEMS WITH PURESELECT INFILL REQUIRE THE CARE AND MAINTENANCE YOU WOULD EXPECT TO GIVE TO A SYNTHETIC TURF FIELD, BUT THERE ARE SOME SPECIFICS THAT YOU SHOULD B E AWARE OF:

THE FIRST MONTHS AFTER INSTALLATION

It will normally take several months for the infill to fully settle between the grass filaments and some 'static cling' of the natural infill to the synthetic turf fiber is normal. Regular maintenance should start immediately after the handover of the field.

REQUIRED MAINTENANCE

PureSelect typically requires additional attention and maintenance. Due to its specific weight, some of the infill material is more mobile, especially during extreme weather. Care should be taken to top up and brush as required. It is possible that the infill may displace during heavy rainfall, however it can be easily redistributed once the playing area has dried out. If infill becomes visible on the playing surface, sprinkling with water, or allowing the rain to fall, will settle the infill back into the system. PureSelect retains more water than rubber based infills. As a result, depending on the climate, the high moisture content could lend itself to being vulnerable to freezing due to ambient temperature changes. The maintenance activities of Brushing, Aerating, Raking, and Sweeping should be adhered to.

AESTHETICS

PureSelect is a natural material with a natural aesthetic and, over time, the look and shape of the infill granules will alter slightly. Typically, the granules will go darker in colour. This is completely normal and does not affect their performance or durability in any way.

NATURAL INFILLS CAN COOL

PureSelect acts as a cooling agent within a synthetic turf system – also adding an additional level of comfort during hot periods.

fieldturf.com

This warranty is insured by a third party.
For more information please contact Customer Service at FieldTurf at the number listed below.
7445 Côte-de-Liesse Road Suite 200, Montreal, QC, Canada H4T 1G2 • Toll Free: 1-800-724-2969 •

WARRANTY

SMARTBUY
Purchasing Program Tarkett Sports

Certificate

Limited Product and Performance Warranty for ProPlay-Sport

ProPlay

by Schmitz Foam Products

Part 1.

Schmitz Foam Products ("Schmitz") warrants to the owner of the sports field or fields, at which the ProPlay-Sport product ("Products") have been originally installed, ("Owner") that the Products are warranted against warping, breaking, tearing and splitting under normal and proper use as an underlayment for an artificial turf sports surface and shall be free from defects in material and workmanship for a period of twenty-five (25) years after the date of installation (''Warranty Period").
Schmitz also warrants that the Products will continue to act as a shock absorbing and draining layer during the Warranty Period, as long as the Products are not subjected to compressive stresses in excess of 40 psi or 25 N/cm² for short time frames (e.g. installation and/or maintenance equipment driving over the surface) and 20 psi or 12½ N/cm² for longer time frames (e.g. installation and/or maintenance equipment parked on the surface).
Schmitz also warrants that the average force reduction of the Products will stay within 10% *relative* (as per Advanced Artificial Athlete) and that the rain water infiltration rate (as per EN 12616) will be at least 1,800 mm per hour, during the Warranty Period.
Schmitz also warrants that the impact attenuation of the field will stay below 165 [Gmax] *if the field is tested below 120 [Gmax] at installation* (as per ASTM F355 A-missile), and that the shock absorption of the field will stay above 50% *if the field is tested above 60% at installation* (as per Advanced Artificial Athlete or EN 14808), during the warranty period of the artificial turf, when properly installed and maintained.

Schmitz will indemnify, defend (with counsel of Schmitz's choice or Schmitz's insurance carrier's choice) and hold harmless the owner against any loss, liability or claim arising from breach of the warranty, to the extent set forth below. If Schmitz determines that any Products do not conform to this Warranty, Schmitz shall deliver to the Owner new Products to replace the non-conforming Products. Schmitz will arrange for installation of such Products, including the temporary removal and repair or replacement of the artificial turf and infill over the affected area. Schmitz shall have reasonable discretion as to whether to repair or make replacement of the artificial turf. Owner shall give Schmitz reasonable advance notice of replacement of the entire turf surface (for reasons other than breach of Schmitz's Warranty) so that a Schmitz representative will be present at the time of turf replacement to inspect the Products for lack of damage which would void the Warranty. The Warranty will not continue in effect after turf replacement if such notice is not given.

Restrictions

This Limited Product Warranty ("Warranty") shall be effective only if (1) the Owner signs and returns this warranty to Schmitz within thirty (30) days of installation of the Products; (2) the Owner gives Schmitz written notice of a claim under this Warranty within thirty (30) days after the Owner discovers, or should have discovered the existence of the condition that gives rise to the claim, and (3) Schmitz has been provided the opportunity to inspect the Products (in place as originally installed) subject to a claim, within ten (10) days after the written notice set forth under (2) above.

Exclusions

This Warranty shall not apply to any Products which have once been installed and thereafter removed to a new location.

Notwithstanding anything to the contrary in this Warranty, any damage or defect resulting in whole or in part from any of the following causes is NOT covered by this Warranty:

1. Normal wear and tear;
2. Improper handling or use of Products after delivery to the job site, including, but not limited to imposition of excessive compressive stresses or warping, breaking, tearing and splitting or improper cutting of Products during the installation process;
3. Improper or inadequate site preparation including, without limitation improper or inadequate base material, improper or inadequate base material grading or compaction; improper material usage in perimeter drain collectors; or improper design or installation of drainage facilities or field edging that would impede drainage;
4. Improper installation of Products, including, without limitation, failure to comply with Schmitz's installation instructions;
5. Floods, fires, winds, lightning, accident, vandalism, terrorism, war, malicious mischief, or other causes outside the control of Schmitz;
6. Improper use or protection after installation, including, without limitation, imposition of excessive compressive stresses or cutting of Products by any cause after installation;
7. Soil expansion or contraction, subsidence, shifting, compression, erosion or any other condition related to the soil, base or subsurface upon which the Products are installed;
8. Improper installation, maintenance, repair or replacement of the field's artificial turf system;
9. Extended exposure of the Products to sunlight or other source of ultraviolet light;
10. Schmitz makes no warranty regarding the drainage of the field as a system, and shall not be responsible for the drainage of the field unless the ProPlay-Sport product is the cause of a non-draining system.

Disclaimer

THIS WARRANTY IS IN LIEU OF ALL OTHER WARRANTIES, EXPRESS OR IMPLIED, STATUTORY OR OTHERWISE, CONCERNING THE PURCHASE, USE OR CONDITION OF ANY PRODUCTS, INCLUDING, WITHOUT LIMITATION, ANY WARRANTY OF MERCHANTABILITY, FITNESS FOR A PARTICULAR PURPOSE, QUALITY OR CONFORMITY WITH ANY DESCRIPTION OR SAMPLE. EXCEPT AS SET FORTH IN THIS WARRANTY, ALL WARRANTIES, REPRESENTATIONS, CONDITIONS AND OTHER TERMS IMPLIED BY LAW ARE EXCLUDED TO THE FULLEST EXTENT PERMITTED BY LAW.

Limitation of Damages

OWNER'S EXCLUSIVE REMEDY FOR ANY AND ALL LIABILITIES, LOSSES, DAMAGES, COSTS AND EXPENSES ARISING OUT OF OR IN CONNECTION WITH THE PURCHASE, USE OR CONDITION OF ANY PRODUCTS, INCLUDING, WITHOUT LIMITATION, ANY BREACH OF WARRANTY, BREACH OF CONTRACT, NEGLIGENCE OR STRICT LIABILITY, OR ANY ALLEGATION THEREOF, SHALL BE LIMMITED TO REPLACEMENT OF THE PRODUCTS FOR WHICH A CLAIM IS MADE AND PROVED AND REPAIR OR REPLACEMENT OF OVERLYING ARTIFICIAL TURF. IN NO EVENT SHALL SCHMITZ BE LIABLE FOR ANY PUNITIVE, SPECIAL, CONSEQUENTIAL, INCIDENTAL OR INDIRECT LOSSES OR DAMAGES ARISING OUT OF OR IN CONNECTION WITH THE PURCHASE, USE OR CONDITION OF ANY PRODUCTS, INCLUDING, BUT NOT LIMITED TO, LOSS OF USE OF ANY PLAYING FIELD.

No person other than the Owner and Schmitz shall have any rights to enforce any term of this Warranty. Schmitz shall be permitted to assign any obligations and limitations under this Warranty, without the prior consent of Owner, to any purchaser of substantially all of the assets of Schmitz or to any financially responsible party in connection therewith.

If Owner is located in North America and/or the Products were supplied by Schmitz Foam Products LLC this Warranty will be governed by the laws of the State of New York and all disputes or claims arising out of or related to this Warranty or the contract or contracts related to the sale and/or installation of the Products shall be resolved by arbitration pursuant to the rules and procedures of the Construction Industry Division of the American Arbitration Association under its Construction Industry Arbitration Rules, and judgment on the award rendered by the arbitrator(s) may be entered by any court having jurisdiction thereof. Place of arbitration will be New York, New York.

If Owner is located outside of North America and the Products were supplied by Schmitz Foam Products B.V., this Warranty will be governed by the laws of The Netherlands and all disputes or claims arising out of or related to this Warranty or the contract or contracts related to the sale and/or installation of the Products shall be resolved by in accordance with the Arbitration Rules of the Netherlands Arbitration Institute and judgment on the award rendered by the arbitrator(s) may be entered by any court having jurisdiction thereof. The proceedings shall be conducted in the English language and the place of Arbitration will be Rotterdam, The Netherlands.

In the event of the arbitration (or litigation) of any dispute, the prevailing party on any claim shall be paid the prevailing party's reasonable attorney's fees, expert witness fees, and other costs associated with the particular claim.

Company (Owner) .....

Contact name .....

Date .....

Place .....

Signature .....

Part 2.

PROJECT	
project name	
street	
zip code	
city	
state	
country	
SCHMITZ FOAM PRODUCTS CUSTOMER	
company name	
street	
zip code	
city	
state	
country	
contact person	
name	
phone	
email	
PROPLAY-SPORT INSTALLER	
company name	
street	
zip code	
city	
state	
country	
contact person	
name	
phone	
email	

MAIN CONTRACTOR	
company name	
street	
zip code	
city	
state	
country	
contact person	
name	
phone	
email	
OWNER	
company name	
street	
zip code	
city	
state	
country	
contact person	
name	
phone	
email	
USE	
sport(s) (type)	

CONSTRUCTION DETAILS
sub-base
construction: (permeable or impermeable, with or without liner, ...) material(s): date of start of installation: date of end of installation:
ProPlay-Sport
type: installed amount: date of start of installation: date of end of installation:
artificial turf
brand & type: pile height: date of start of installation: date of end of installation:
infill
type(s): weight per unit area (or filled height): per type date of start of installation: date of end of installation:

test results
add lab test results (if available) !
add field test results (if available) !

comments:

Company (Customer) .....

Contact name .....

Date .....

Place .....

Signature .....

Manufacturer's Limited Warranty

FieldTurf warrants that if **FieldTurf (product code)** (Product) for multi-sport use synthetic turf proves to be defective in material or installation workmanship, therefore, resulting in premature wear, during normal and ordinary use of the Product for the sporting activities provided herein or for any other uses for which FieldTurf has provided its written authorization, within **five (5) years** from the date of completion of installation as indicated in this Warranty, FieldTurf shall either repair or replace the affected area of the Product in accordance with the terms of this Warranty. FieldTurf's sole liability under this Warranty shall be limited to either repair or replacement of the affected area of the Product, at its sole discretion, and FieldTurf shall have no other obligations or liabilities with respect to defects of the Product. FieldTurf will, at FieldTurf's option, either repair or replace the affected area to the extent required to meet the Warranty period, but no cash refunds will be made**.** This Warranty shall commence upon the date of completion indicated in this Warranty. The accompanying Warranty service will not come into effect unless and until FieldTurf's Certificate of Completion is sent for validation to the corporate office of FieldTurf indicated herein within thirty (30) days of the date of completion or Purchaser's first use, whichever occurs first. In all cases, the Warranty shall be deemed to commence upon the date of completion indicated in this Warranty. The acceptance form of the terms and conditions contained in FieldTurf's Maintenance Guidelines must also be provided to FieldTurf's corporate office within thirty (30) days of completion of installation. This Warranty is limited to the remedies of repair or replacement, which shall constitute the exclusive remedies available under this Warranty; all other remedies or recourses which might otherwise be available are hereby waived by the Purchaser. FieldTurf will have no other obligations or liability for damages arising out of or in connection with the use or performance of the Product, including, but without limitation, damages for personal injury and/or economic losses. This Warranty shall not come into effect, and FieldTurf shall have no obligations under this Warranty, unless and until FieldTurf is paid in full for the Product to be warranted hereunder.

Field Markings: (sport markings to be specified)

Other Exclusions

EXCEPT AS EXPRESSLY SET FORTH IN THE MANUFACTURER'S LIMITED WARRANTY ABOVE, FIELDTURF DISCLAIMS ALL OTHER WARRANTIES OF ANY KIND, EXPRESS OR IMPLIED, IN FACT OR IN LAW, INCLUDING, BUT NOT LIMITED TO, THE IMPLIED WARRANTIES OF MERCHANTABILITY AND FITNESS FOR A PARTICULAR PURPOSE.

THIS WARRANTY SHALL BECOME NULL AND VOID IF THE PURCHASER FAILS TO MAINTAIN THE FIELD IN ACCORDANCE WITH THE FIELDTURF MAINTENANCE GUIDELINES AND SCHEDULE PROVIDED BY FIELDTURF THEREIN. ALL MAINTENANCE SHALL BE PERFORMED BY FIELDTURF-TRAINED AND/OR FIELDTURF-AUTHORIZED MAINTENANCE PERSONNEL ONLY.

Furthermore, this Manufacturer's Limited Warranty ***does not cover***:

1. Any damage resulting, directly or indirectly, from *force majeure*, accident, misuse, intentional and unintentional abuse, infill displacement, neglect; or from usage, unintentional or otherwise, that cannot reasonably be considered as normal play or ordinary use of the Product. For purposes of this Warranty, normal play and ordinary use shall mean usage up to 3,000 hours per year of regular play and utilization for the sporting activities provided herein; normal play and ordinary use also includes a reasonable number of users or participants, but does not include repetitive marching, repetitive training or high-intensity drills on the same part of the field, especially in the areas including, but not limited to, home plate, pitcher's mound, base areas, base paths, soccer penalty mark/spot areas, goal areas, sideline areas and lacrosse crease areas, all of which require frequent maintenance in accordance with FieldTurf Maintenance Guidelines and which may require regular replacement. This Warranty is expressly conditioned upon the Customer completing and submitting the FieldTurf Maintenance Log provided in FieldTurf's Maintenance Guidelines.

SAMPLE

FieldTurf
A Tarkett Sports Company

Manufacturer's Limited Warranty

2. Damage resulting from failure to maintain the Product in accordance with FieldTurf's Maintenance Guidelines provided to the Purchaser. The Purchaser shall keep a log of all maintenance performed on the Product and supply FieldTurf with a copy upon request.

3. Damage resulting from repair, attempted repair and/or maintenance by anyone other than FieldTurf, an authorized FieldTurf distributor or an authorized FieldTurf maintainer.

4. Damage due to causes which include, but are not limited to, the application of chemicals and/or cleaning agents, adhesive backing, dirt, traffic, negligence, vandalism, fire, flood, windstorm, animals, improper care and Acts of God.

5. Failure and/or improper design of the base; depression of the soil, subsurface or other matter upon which the base or Product rests; and any and all resulting damage to the Product arising therefrom.

6. FieldTurf does not warrant the percolation rate, long term planarity and/or compaction of the base which the product is installed. **FIELDTURF DISCLAIMS ALL WARRANTIES AS TO THE BASE, EXPRESS OR IMPLIED, AND ANY AND ALL RESULTING DAMAGE TO THE PRODUCT ARISING THEREFROM**.

7. Damage resulting from the use of improper footwear such as long-spiked track shoes, regular and repeated use of steel cleats, and flat-soled shoes. Standard molded soccer or football cleats are recommended.

All synthetic turf is subject to normal wear and tear, which does not constitute a manufacturing defect and is not covered by this Warranty. In addition to the other factors listed in this Warranty and without limitation, the extent of the wear and tear depends on the construction of synthetic turf (fiber face weight, stitch rate, fiber pile height and gauge, infill components and maintenance of the field) and the intensity of use of the synthetic turf. The Product will be stable to light fading with the maximum fading of the Product during the Warranty period not to exceed fifteen percent (15%) of color loss annually based upon an acceptable grey scale. This Warranty does not cover slight variations or gradations of color within the Product and/or face distortion. Normal behavior of the fiber and infill with respect to the wear pattern of a field is more fully explained in the "Field Settling" document, provided in the FieldTurf After-Sales Service Package.

FieldTurf disclaims all liability for incidental and consequential damages for breach of any express or implied warranty, including any implied warranty of merchantability, with respect to the Product. In the event that the Product be used for purposes other than the sporting activities provided herein or for any other uses for which FieldTurf has provided its written authorization, FieldTurf shall not be responsible for damages resulting therefrom and, therefore, this Warranty, as well as any and all applicable legal warranties, shall become **null and void** as Purchaser understands that FieldTurf has tested the Product for use in connection with the said sporting activities and/or uses, and that it may not have tested the Product for other such uses. Any Product repairs or replacements performed under the terms of this Warranty shall not extend the term of this Warranty.

Name of Purchaser:		*Sporting Activities:*	Multi-Sport Use
Date of Completion:		*Installed by:*	FieldTurf USA, Inc.
Location:		*City:*	
Address:		*Zip:*	
State:		*Fax/email:*	
Tel:			
Signature:		*Name :*	
Date:		*Reference:*	

Disclaimer. *The information in this document is subject to change without notice and should not be construed as a commitment by FieldTurf USA, Inc. FieldTurf assumes no responsibility for any errors that may appear in this document.*

SAMPLE

This warranty is insured by a third party.
For more information please contact Customer Service at FieldTurf at the number listed below.
7445 Côte-de-Liesse Road Suite 200, Montreal, QC, Canada H4T 1G2 • Toll Free: 1-800-724-2969 •

Manufacturer's Limited Warranty

FieldTurf warrants that if **FieldTurf (product code)** (Product) for multi-sport use synthetic turf proves to be defective in material or installation workmanship, therefore, resulting in premature wear, during normal and ordinary use of the Product for the sporting activities provided herein or for any other uses for which FieldTurf has provided its written authorization, within **eight (8) years** from the date of completion of installation as indicated in this Warranty, FieldTurf shall either repair or replace the affected area of the Product in accordance with the terms of this Warranty. FieldTurf's sole liability under this Warranty shall be limited to either repair or replacement of the affected area of the Product, at its sole discretion, and FieldTurf shall have no other obligations or liabilities with respect to defects of the Product. FieldTurf will, at FieldTurf's option, either repair or replace the affected area to the extent required to meet the Warranty period, but no cash refunds will be made**.** This Warranty shall commence upon the date of completion indicated in this Warranty. The accompanying Warranty service will not come into effect unless and until FieldTurf's Certificate of Completion is sent for validation to the corporate office of FieldTurf indicated herein within thirty (30) days of the date of completion or Purchaser's first use, whichever occurs first. In all cases, the Warranty shall be deemed to commence upon the date of completion indicated in this Warranty. The acceptance form of the terms and conditions contained in FieldTurf's Maintenance Guidelines must also be provided to FieldTurf's corporate office within thirty (30) days of completion of installation. This Warranty is limited to the remedies of repair or replacement, which shall constitute the exclusive remedies available under this Warranty; all other remedies or recourses which might otherwise be available are hereby waived by the Purchaser. FieldTurf will have no other obligations or liability for damages arising out of or in connection with the use or performance of the Product, including, but without limitation, damages for personal injury and/or economic losses. This Warranty shall not come into effect, and FieldTurf shall have no obligations under this Warranty, unless and until FieldTurf is paid in full for the Product to be warranted hereunder.

Field Markings: (sport markings to be specified)

Other Exclusions

EXCEPT AS EXPRESSLY SET FORTH IN THE MANUFACTURER'S LIMITED WARRANTY ABOVE, FIELDTURF DISCLAIMS ALL OTHER WARRANTIES OF ANY KIND, EXPRESS OR IMPLIED, IN FACT OR IN LAW, INCLUDING, BUT NOT LIMITED TO, THE IMPLIED WARRANTIES OF MERCHANTABILITY AND FITNESS FOR A PARTICULAR PURPOSE.

THIS WARRANTY SHALL BECOME NULL AND VOID IF THE PURCHASER FAILS TO MAINTAIN THE FIELD IN ACCORDANCE WITH THE FIELDTURF MAINTENANCE GUIDELINES AND SCHEDULE PROVIDED BY FIELDTURF THEREIN. ALL MAINTENANCE SHALL BE PERFORMED BY FIELDTURF-TRAINED AND/OR FIELDTURF-AUTHORIZED MAINTENANCE PERSONNEL ONLY.

Furthermore, this Manufacturer's Limited Warranty ***does not cover***:

1. Any damage resulting, directly or indirectly, from *force majeure*, accident, misuse, intentional and unintentional abuse, infill displacement, neglect; or from usage, unintentional or otherwise, that cannot reasonably be considered as normal play or ordinary use of the Product. For purposes of this Warranty, normal play and ordinary use shall mean usage up to 3,000 hours per year of regular play and utilization for the sporting activities provided herein; normal play and ordinary use also includes a reasonable number of users or participants, but does not include repetitive marching, repetitive training or high-intensity drills on the same part of the field, especially in the areas including, but not limited to, home plate, pitcher's mound, base areas, base paths, soccer penalty mark/spot areas, goal areas, sideline areas and lacrosse crease areas, all of which require frequent maintenance in accordance with FieldTurf Maintenance Guidelines and which may require regular replacement. This Warranty is expressly conditioned upon the Customer completing and submitting the FieldTurf Maintenance Log provided in FieldTurf's Maintenance Guidelines.

SAMPLE

Manufacturer's Limited Warranty

2. Damage resulting from failure to maintain the Product in accordance with FieldTurf's Maintenance Guidelines provided to the Purchaser. The Purchaser shall keep a log of all maintenance performed on the Product and supply FieldTurf with a copy upon request.

3. Damage resulting from repair, attempted repair and/or maintenance by anyone other than FieldTurf, an authorized FieldTurf distributor or an authorized FieldTurf maintainer.

4. Damage due to causes which include, but are not limited to, the application of chemicals and/or cleaning agents, adhesive backing, dirt, traffic, negligence, vandalism, fire, flood, windstorm, animals, improper care and Acts of God.

5. Failure and/or improper design of the base; depression of the soil, subsurface or other matter upon which the base or Product rests; and any and all resulting damage to the Product arising therefrom.

6. FieldTurf does not warrant the percolation rate, long term planarity and/or compaction of the base which the product is installed. **FIELDTURF DISCLAIMS ALL WARRANTIES AS TO THE BASE, EXPRESS OR IMPLIED, AND ANY AND ALL RESULTING DAMAGE TO THE PRODUCT ARISING THEREFROM**.

7. Damage resulting from the use of improper footwear such as long-spiked track shoes, regular and repeated use of steel cleats, and flat-soled shoes. Standard molded soccer or football cleats are recommended.

All synthetic turf is subject to normal wear and tear, which does not constitute a manufacturing defect and is not covered by this Warranty. In addition to the other factors listed in this Warranty and without limitation, the extent of the wear and tear depends on the construction of synthetic turf (fiber face weight, stitch rate, fiber pile height and gauge, infill components and maintenance of the field) and the intensity of use of the synthetic turf. The Product will be stable to light fading with the maximum fading of the Product during the Warranty period not to exceed fifteen percent (15%) of color loss annually based upon an acceptable grey scale. This Warranty does not cover slight variations or gradations of color within the Product and/or face distortion. Normal behavior of the fiber and infill with respect to the wear pattern of a field is more fully explained in the "Field Settling" document, provided in the FieldTurf After-Sales Service Package.

FieldTurf disclaims all liability for incidental and consequential damages for breach of any express or implied warranty, including any implied warranty of merchantability, with respect to the Product. In the event that the Product be used for purposes other than the sporting activities provided herein or for any other uses for which FieldTurf has provided its written authorization, FieldTurf shall not be responsible for damages resulting therefrom and, therefore, this Warranty, as well as any and all applicable legal warranties, shall become **null and void** as Purchaser understands that FieldTurf has tested the Product for use in connection with the said sporting activities and/or uses, and that it may not have tested the Product for other such uses. Any Product repairs or replacements performed under the terms of this Warranty shall not extend the term of this Warranty.

Name of Purchaser:		*Sporting Activities:*	Multi-Sport Use
Date of Completion:		*Installed by:*	FieldTurf USA, Inc.
Location:		*City:*	
Address:		*Zip:*	
State:		*Fax/email:*	
Tel:			
Signature:		*Name :*	I
Date:		*Reference:*	

Disclaimer. *The information in this document is subject to change without notice and should not be construed as a commitment by FieldTurf USA, Inc. FieldTurf assumes no responsibility for any errors that may appear in this document.*

SAMPLE

This warranty is insured by a third party.

For more information please contact Customer Service at FieldTurf at the number listed below.

7445 Côte-de-Liesse Road Suite 200, Montreal, QC, Canada H4T 1G2 • Toll Free: 1-800-724-2969 •

FieldTurf
A Tarkett Sports Company

Manufacturer's Limited Warranty

FieldTurf warrants that if **FieldTurf (product code)** (Product) for multi-sport use synthetic turf proves to be defective in material or installation workmanship, therefore resulting in premature wear, during normal and ordinary use of the Product for the sporting activities provided herein or for any other uses for which FieldTurf has provided its written authorization, within **five (5) years** from the date of completion of installation as indicated in this Warranty, FieldTurf shall either repair or replace the affected area of the Product in accordance with the terms of this Warranty. FieldTurf's sole liability under this Warranty shall be limited to either repair or replacement of the affected area of the Product, at its sole discretion, and FieldTurf shall have no other obligations or liabilities with respect to defects of the Product. FieldTurf will, at FieldTurf's option, either repair or replace the affected area to the extent required to meet the Warranty period, but no cash refunds will be made**.** This Warranty shall commence upon the date of completion indicated in this Warranty. The accompanying Warranty service will not come into effect unless and until FieldTurf's Certificate of Completion is sent for validation to the corporate office of FieldTurf indicated herein within thirty (30) days of the date of completion or Purchaser's first use, whichever occurs first. In all cases, the Warranty shall be deemed to commence upon the date of completion indicated in this Warranty. The acceptance form of the terms and conditions contained in FieldTurf's Maintenance Guidelines must also be provided to FieldTurf's corporate office within thirty (30) days of completion of installation. This Warranty is limited to the remedies of repair or replacement, which shall constitute the exclusive remedies available under this Warranty; all other remedies or recourses which might otherwise be available are hereby waived by the Purchaser. FieldTurf will have no other obligations or liability for damages arising out of or in connection with the use or performance of the Product, including, but without limitation, damages for personal injury and/or economic losses. This Warranty shall not come into effect, and FieldTurf shall have no obligations under this Warranty, unless and until FieldTurf is paid in full for the Product to be warranted hereunder. **As concerns the designated high-traffic areas, which include but are not limited to: Home Plate, Pitcher's Mound, Base areas and paths; and all synthetic turf installed anywhere on the infield, the foregoing Warranty applies except that the applicable Warranty period shall be limited to a two (2) year Manufacturer's Warranty.**

Field Markings: Baseball

Other Exclusions

EXCEPT AS EXPRESSLY SET FORTH IN THE MANUFACTURER'S LIMITED WARRANTY ABOVE, FIELDTURF DISCLAIMS ALL OTHER WARRANTIES OF ANY KIND, EXPRESS OR IMPLIED, IN FACT OR IN LAW, INCLUDING, BUT NOT LIMITED TO, THE IMPLIED WARRANTIES OF MERCHANTABILITY AND FITNESS FOR A PARTICULAR PURPOSE.

THIS WARRANTY SHALL BECOME NULL AND VOID IF THE PURCHASER FAILS TO MAINTAIN THE FIELD IN ACCORDANCE WITH THE FIELDTURF MAINTENANCE GUIDELINES AND SCHEDULE PROVIDED BY FIELDTURF THEREIN. ALL MAINTENANCE SHALL BE PERFORMED BY FIELDTURF-TRAINED AND/OR FIELDTURF-AUTHORIZED MAINTENANCE PERSONNEL ONLY.

Furthermore, this Manufacturer's Limited Warranty ***does not cover***:

1. Any damage resulting, directly or indirectly, from *force majeure*, accident, misuse, intentional and unintentional abuse, infill displacement, neglect; or from usage, unintentional or otherwise, that cannot reasonably be considered as normal play or ordinary use of the Product. For purposes of this Warranty, normal play and ordinary use shall mean usage up to 3,000 hours per year of regular play and utilization for the sporting activities provided herein; normal play and ordinary use also includes a reasonable number of users or participants, but does not include repetitive marching, repetitive training or high-intensity drills on the same part of the field, especially in the areas of, but not limited to, home plate, pitcher's mound, base areas, base paths all of which require frequent maintenance in accordance with FieldTurf Maintenance Guidelines and may require regular replacement.

2. Damage resulting from failure to maintain the Product in accordance with FieldTurf's Maintenance Guidelines provided to the Purchaser, including without limitation, the baseball specific maintenance and use instructions. Given the nature of baseball, this warranty shall be conditional upon the Purchaser carrying out regular baseball specific field maintenance as specified in FieldTurf's applicable maintenance

SAMPLE

Manufacturer's Limited Warranty

manuals/guidelines and maintaining written logs showing same. The Purchaser understands the particular baseball requirement for frequent in-fill replenishment and maintenance on bases, base paths and anywhere else in-fill is naturally displaced.

3. Damage resulting from repair, attempted repair and/or maintenance by anyone other than FieldTurf, an authorized FieldTurf distributor or an authorized FieldTurf maintainer.

4. Damage due to causes which include, but are not limited to, the application of chemicals and/or cleaning agents, adhesive backing, dirt, traffic, negligence, vandalism, fire, flood, windstorm, animals, improper care and Acts of God.

5. Failure and/or improper design of the base; depression of the soil, subsurface or other matter upon which the base or Product rests; and any and all resulting damage to the Product arising therefrom.

6. FieldTurf does not warrant the percolation rate, long term planarity and/or compaction of the base which the product is installed. **FIELDTURF DISCLAIMS ALL WARRANTIES AS TO THE BASE, EXPRESS OR IMPLIED, AND ANY AND ALL RESULTING DAMAGE TO THE PRODUCT ARISING THEREFROM**.

7. Damage resulting from the use of improper footwear such as long-spiked track shoes, regular and repeated use of steel cleats, and flat-soled shoes. Standard molded soccer or football cleats are recommended.

All synthetic turf is subject to normal wear and tear, which does not constitute a manufacturing defect and is not covered by this Warranty. In addition to the other factors listed in this Warranty and without limitation, the extent of the wear and tear depends on the construction of synthetic turf (fiber face weight, stitch rate, fiber pile height and gauge, infill components and maintenance of the field) and the intensity of use of the synthetic turf. The Product will be stable to light fading with the maximum fading of the Product during the Warranty period not to exceed fifteen percent (15%) of color loss annually based upon an acceptable grey scale. This Warranty does not cover slight variations or gradations of color within the Product and/or face distortion. Normal behavior of the fiber and infill with respect to the wear pattern of a field is more fully explained in the "Field Settling" document, provided in the FieldTurf After-Sales Service Package.

FieldTurf disclaims all liability for incidental and consequential damages for breach of any express or implied warranty, including any implied warranty of merchantability, with respect to the Product. In the event that the Product be used for purposes other than the sporting activities provided herein or for any other uses for which FieldTurf has provided its written authorization, FieldTurf shall not be responsible for damages resulting therefrom and, therefore, this Warranty, as well as any and all applicable legal warranties, shall become **null and void** as Purchaser understands that FieldTurf has tested the Product for use in connection with the said sporting activities and/or uses, and that it may not have tested the Product for other such uses. Any Product repairs or replacements performed under the terms of this Warranty shall not extend the term of this Warranty.

Name of Purchaser:		*Sporting Activities:*	Multi-Sport Use
Date of Completion:		*Installed by:*	FieldTurf USA, Inc.
Location:		*City:*	
Address:		*Zip:*	
State:		*Fax/email:*	
Tel:			
Signature:		*Name :*	
Date:		*Reference:*	

Disclaimer. *The information in this document is subject to change without notice and should not be construed as a commitment by FieldTurf USA, Inc. FieldTurf assumes no responsibility for any errors that may appear in this document.*

SAMPLE

This warranty is insured by a third party.

For more information please contact Customer Service at FieldTurf at the number listed below.

7445 Côte-de-Liesse Road Suite 200, Montreal, QC, Canada H4T 1G2 • Toll Free: 1-800-724-2969 •

FieldTurf
A Tarkett Sports Company

Manufacturer's Limited Warranty

FieldTurf warrants that if **FieldTurf (product code)** (Product) for multi-sport use synthetic turf proves to be defective in material or installation workmanship, therefore resulting in premature wear, during normal and ordinary use of the Product for the sporting activities provided herein or for any other uses for which FieldTurf has provided its written authorization, within **eight (8) years** from the date of completion of installation as indicated in this Warranty, FieldTurf shall either repair or replace the affected area of the Product in accordance with the terms of this Warranty. FieldTurf's sole liability under this Warranty shall be limited to either repair or replacement of the affected area of the Product, at its sole discretion, and FieldTurf shall have no other obligations or liabilities with respect to defects of the Product. FieldTurf will, at FieldTurf's option, either repair or replace the affected area to the extent required to meet the Warranty period, but no cash refunds will be made. This Warranty shall commence upon the date of completion indicated in this Warranty. The accompanying Warranty service will not come into effect unless and until FieldTurf's Certificate of Completion is sent for validation to the corporate office of FieldTurf indicated herein within thirty (30) days of the date of completion or Purchaser's first use, whichever occurs first. In all cases, the Warranty shall be deemed to commence upon the date of completion indicated in this Warranty. This Warranty is limited to the remedies of repair or replacement, which shall constitute the exclusive remedies available under this Warranty; all other remedies or recourses which might otherwise be available are hereby waived by the Purchaser. FieldTurf will have no other obligations or liability for damages arising out of or in connection with the use or performance of the Product, including, but without limitation, damages for personal injury and/or economic losses. This Warranty shall not come into effect, and FieldTurf shall have no obligations under this Warranty, unless and until FieldTurf is paid in full for the Product to be warranted hereunder. **As concerns the designated high-traffic areas, which include but are not limited to: Home Plate, Pitcher's Mound, Base areas and paths; and all synthetic turf installed anywhere on the infield, the foregoing Warranty applies except that the applicable Warranty period shall be limited to a two (2) year Manufacturer's Warranty.**

Field Markings: Baseball

Other Exclusions

EXCEPT AS EXPRESSLY SET FORTH IN THE MANUFACTURER'S LIMITED WARRANTY ABOVE, FIELDTURF DISCLAIMS ALL OTHER WARRANTIES OF ANY KIND, EXPRESS OR IMPLIED, IN FACT OR IN LAW, INCLUDING, BUT NOT LIMITED TO, THE IMPLIED WARRANTIES OF MERCHANTABILITY AND FITNESS FOR A PARTICULAR PURPOSE.

THIS WARRANTY SHALL BECOME NULL AND VOID IF THE PURCHASER FAILS TO MAINTAIN THE FIELD IN ACCORDANCE WITH THE FIELDTURF MAINTENANCE GUIDELINES AND SCHEDULE PROVIDED BY FIELDTURF THEREIN. ALL MAINTENANCE SHALL BE PERFORMED BY FIELDTURF-TRAINED AND/OR FIELDTURF-AUTHORIZED MAINTENANCE PERSONNEL ONLY.

Furthermore, this Manufacturer's Limited Warranty ***does not cover***:

1. Any damage resulting, directly or indirectly, from *force majeure*, accident, misuse, intentional and unintentional abuse, infill displacement, neglect; or from usage, unintentional or otherwise, that cannot reasonably be considered as normal play or ordinary use of the Product. For purposes of this Warranty, normal play and ordinary use shall mean usage up to 3,000 hours per year of regular play and utilization for the sporting activities provided herein; normal play and ordinary use also includes a reasonable number of users or participants, but does not include repetitive marching, repetitive training or high-intensity drills on the same part of the field, especially in the areas of, but not limited to, home plate, pitcher's mound, base areas, base paths all of which require frequent maintenance in accordance with FieldTurf Maintenance Guidelines and may require regular replacement.
2. Damage resulting from failure to maintain the Product in accordance with FieldTurf's Maintenance Guidelines provided to the Purchaser, including without limitation, the baseball specific maintenance and use instructions. Given the nature of baseball, this warranty shall be conditional upon the Purchaser carrying out regular baseball specific field maintenance as specified in FieldTurf's applicable maintenance manuals/guidelines and maintaining written logs showing same. The Purchaser understands the particular

SAMPLE

FieldTurf
A Tarkett Sports Company

Manufacturer's Limited Warranty

baseball requirement for frequent in-fill replenishment and maintenance on bases, base paths and anywhere else in-fill is naturally displaced.

3. Damage resulting from repair, attempted repair and/or maintenance by anyone other than FieldTurf, an authorized FieldTurf distributor or an authorized FieldTurf maintainer.
4. Damage due to causes which include, but are not limited to, the application of chemicals and/or cleaning agents, adhesive backing, dirt, traffic, negligence, vandalism, fire, flood, windstorm, animals, improper care and Acts of God.
5. Failure and/or improper design of the base; depression of the soil, subsurface or other matter upon which the base or Product rests; and any and all resulting damage to the Product arising therefrom.
6. FieldTurf does not warrant the percolation rate, long term planarity and/or compaction of the base which the product is installed. **FIELDTURF DISCLAIMS ALL WARRANTIES AS TO THE BASE, EXPRESS OR IMPLIED, AND ANY AND ALL RESULTING DAMAGE TO THE PRODUCT ARISING THEREFROM**.
7. Damage resulting from the use of improper footwear such as long-spiked track shoes, regular and repeated use of steel cleats, and flat-soled shoes. Standard molded soccer or football cleats are recommended.

All synthetic turf is subject to normal wear and tear, which does not constitute a manufacturing defect and is not covered by this Warranty. In addition to the other factors listed in this Warranty and without limitation, the extent of the wear and tear depends on the construction of synthetic turf (fiber face weight, stitch rate, fiber pile height and gauge, infill components and maintenance of the field) and the intensity of use of the synthetic turf. The Product will be stable to light fading with the maximum fading of the Product during the Warranty period not to exceed fifteen percent (15%) of color loss annually based upon an acceptable grey scale. This Warranty does not cover slight variations or gradations of color within the Product and/or face distortion. Normal behavior of the fiber and infill with respect to the wear pattern of a field is more fully explained in the "Field Settling" document, provided in the FieldTurf After-Sales Service Package.

FieldTurf disclaims all liability for incidental and consequential damages for breach of any express or implied warranty, including any implied warranty of merchantability, with respect to the Product. In the event that the Product be used for purposes other than the sporting activities provided herein or for any other uses for which FieldTurf has provided its written authorization, FieldTurf shall not be responsible for damages resulting therefrom and, therefore, this Warranty, as well as any and all applicable legal warranties, shall become **null and void** as Purchaser understands that FieldTurf has tested the Product for use in connection with the said sporting activities and/or uses, and that it may not have tested the Product for other such uses. Any Product repairs or replacements performed under the terms of this Warranty shall not extend the term of this Warranty.

Name of Purchaser:
Date of Completion:
Location:
Address:
State:
Tel:
Signature:
Date:

Sporting Activities: Multi-Sport Use
Installed by: FieldTurf USA, Inc.
City:
Zip:
Fax/email:

Name :
Reference:

SAMPLE

Disclaimer. *The information in this document is subject to change without notice and should not be construed as a commitment by FieldTurf USA, Inc. FieldTurf assumes no responsibility for any errors that may appear in this document.*

This warranty is insured by a third party.
For more information please contact Customer Service at FieldTurf at the number listed below.
7445 Côte-de-Liesse Road Suite 200, Montreal, QC, Canada H4T 1G2 • Toll Free: 1-800-724-2969 •

FieldTurf
A Tarkett Sports Company

Manufacturer's Limited Warranty

FieldTurf warrants that if **FieldTurf product code** (Product) for multi-sport use synthetic turf proves to be defective in material or installation workmanship, therefore resulting in premature wear, during normal and ordinary use of the Product for the sporting activities provided herein or for any other uses for which FieldTurf has provided its written authorization, within **ten (10) years** from the date of completion of installation as indicated in this Warranty (the first eight (8) years to be insured and the final two (2) years to be a manufacturer's warranty), FieldTurf shall either repair or replace the affected area of the Product in accordance with the terms of this Warranty. FieldTurf's sole liability under this Warranty shall be limited to either repair or replacement of the affected area of the Product, at its sole discretion, and FieldTurf shall have no other obligations or liabilities with respect to defects of the Product. FieldTurf will, at FieldTurf's option, either repair or replace the affected area to the extent required to meet the Warranty period, but no cash refunds will be made. This Warranty shall commence upon the date of completion indicated in this Warranty. The accompanying Warranty service will not come into effect unless and until FieldTurf's Certificate of Completion is sent for validation to the corporate office of FieldTurf indicated herein within thirty (30) days of the date of completion or Purchaser's first use, whichever occurs first. In all cases, the Warranty shall be deemed to commence upon the date of completion indicated in this Warranty. This Warranty is limited to the remedies of repair or replacement, which shall constitute the exclusive remedies available under this Warranty; all other remedies or recourses which might otherwise be available are hereby waived by the Purchaser. FieldTurf will have no other obligations or liability for damages arising out of or in connection with the use or performance of the Product, including, but without limitation, damages for personal injury and/or economic losses. This Warranty shall not come into effect, and FieldTurf shall have no obligations under this Warranty, unless and until FieldTurf is paid in full for the Product to be warranted hereunder. **As concerns the designated high-traffic areas, which include but are not limited to: Home Plate, Pitcher's Mound, Base areas and paths; and all synthetic turf installed anywhere on the infield, the foregoing Warranty applies except that the applicable Warranty period shall be limited to a two (2) year Manufacturer's Warranty.**

Field Markings: Baseball/Softball

Other Exclusions

EXCEPT AS EXPRESSLY SET FORTH IN THE MANUFACTURER'S LIMITED WARRANTY ABOVE, FIELDTURF DISCLAIMS ALL OTHER WARRANTIES OF ANY KIND, EXPRESS OR IMPLIED, IN FACT OR IN LAW, INCLUDING, BUT NOT LIMITED TO, THE IMPLIED WARRANTIES OF MERCHANTABILITY AND FITNESS FOR A PARTICULAR PURPOSE.

THIS WARRANTY SHALL BECOME NULL AND VOID IF THE PURCHASER FAILS TO MAINTAIN THE FIELD IN ACCORDANCE WITH THE FIELDTURF MAINTENANCE GUIDELINES AND SCHEDULE PROVIDED BY FIELDTURF THEREIN. ALL MAINTENANCE SHALL BE PERFORMED BY FIELDTURF-TRAINED AND/OR FIELDTURF-AUTHORIZED MAINTENANCE PERSONNEL ONLY.

Furthermore, this Manufacturer's Limited Warranty ***does not cover***:

1. Any damage resulting, directly or indirectly, from *force majeure*, accident, misuse, intentional and unintentional abuse, infill displacement, neglect; or from usage, unintentional or otherwise, that cannot reasonably be considered as normal play or ordinary use of the Product. For purposes of this Warranty, normal play and ordinary use shall mean usage up to 3,000 hours per year of regular play and utilization for the sporting activities provided herein; normal play and ordinary use also includes a reasonable number of users or participants, but does not include repetitive marching, repetitive training or high-intensity drills on the same part of the field, especially in the areas of, but not limited to, home plate, pitcher's mound, base areas, base paths all of which require frequent maintenance in accordance with FieldTurf Maintenance Guidelines and may require regular replacement.
2. Damage resulting from failure to maintain the Product in accordance with FieldTurf's Maintenance Guidelines provided to the Purchaser, including without limitation, the baseball specific maintenance and use instructions. Given the nature of baseball, this warranty shall be conditional upon the Purchaser carrying out regular baseball specific field maintenance as specified in FieldTurf's applicable maintenance manuals/guidelines and maintaining written logs showing same. The Purchaser understands the particular baseball requirement for frequent in-fill replenishment and maintenance on bases, base paths and anywhere else in-fill is naturally displaced.

SAMPLE

FieldTurf
A Tarkett Sports Company

Manufacturer's Limited Warranty

3. Damage resulting from repair, attempted repair and/or maintenance by anyone other than FieldTurf, an authorized FieldTurf distributor or an authorized FieldTurf maintainer.
4. Damage due to causes which include, but are not limited to, the application of chemicals and/or cleaning agents, adhesive backing, dirt, traffic, negligence, vandalism, fire, flood, windstorm, animals, improper care and Acts of God.
5. Failure and/or improper design of the base; depression of the soil, subsurface or other matter upon which the base or Product rests; and any and all resulting damage to the Product arising therefrom.
6. FieldTurf does not warrant the percolation rate, long term planarity and/or compaction of the base which the product is installed. **FIELDTURF DISCLAIMS ALL WARRANTIES AS TO THE BASE, EXPRESS OR IMPLIED, AND ANY AND ALL RESULTING DAMAGE TO THE PRODUCT ARISING THEREFROM**.
7. Damage resulting from the use of improper footwear such as long-spiked track shoes, regular and repeated use of steel cleats, and flat-soled shoes. Standard molded soccer or football cleats are recommended.
8. Damage resulting from the inadequate installation, improper maintenance and/or other failure of any third party shock pad or underlayment pad installed beneath the Product, including, but not limited to, detachment of the Product caused by expansion and/or contraction of the third party shock pad or underlayment pad.

All synthetic turf is subject to normal wear and tear, which does not constitute a manufacturing defect and is not covered by this Warranty. In addition to the other factors listed in this Warranty and without limitation, the extent of the wear and tear depends on the construction of synthetic turf (fiber face weight, stitch rate, fiber pile height and gauge, infill components and maintenance of the field) and the intensity of use of the synthetic turf. The Product will be stable to light fading with the maximum fading of the Product during the Warranty period not to exceed fifteen percent (15%) of color loss annually based upon an acceptable grey scale. This Warranty does not cover slight variations or gradations of color within the Product and/or face distortion. Normal behavior of the fiber and infill with respect to the wear pattern of a field is more fully explained in the "Field Settling" document, provided in the FieldTurf After-Sales Service Package.

FieldTurf disclaims all liability for incidental and consequential damages for breach of any express or implied warranty, including any implied warranty of merchantability, with respect to the Product. In the event that the Product be used for purposes other than the sporting activities provided herein or for any other uses for which FieldTurf has provided its written authorization, FieldTurf shall not be responsible for damages resulting therefrom and, therefore, this Warranty, as well as any and all applicable legal warranties, shall become **null and void** as Purchaser understands that FieldTurf has tested the Product for use in connection with the said sporting activities and/or uses, and that it may not have tested the Product for other such uses. Any Product repairs or replacements performed under the terms of this Warranty shall not extend the term of this Warranty.

Name of Purchaser:		*Sporting Activities:*	Multi-Sport Use
Date of Completion:		*Installed by:*	FieldTurf USA, Inc.
Location:		*City:*	
Address:		*Zip:*	
State:		*Fax/email:*	
Tel:			
Signature:		*Name :*	
Date:		*Reference:*	

SAMPLE

Disclaimer. The information in this document is subject to change without notice and should not be construed as a commitment by FieldTurf USA, Inc. FieldTurf assumes no responsibility for any errors that may appear in this document.

This warranty is insured by a third party.

For more information please contact Customer Service at FieldTurf at the number listed below.
7445 Côte-de-Liesse Road Suite 200, Montreal, QC, Canada H4T 1G2 • Toll Free: 1-800-724-2969 •

Manufacturer's Limited Warranty

FieldTurf warrants that if **FieldTurf FT CORE** (Product) for multi-sport use synthetic turf proves to be defective in material, installation workmanship, therefore resulting in premature wear, during normal and ordinary use of the Product for the sporting activities provided herein or for any other uses for which FieldTurf has provided its written authorization, within **ten (10) years** from the date of completion of installation as indicated in this Warranty, FieldTurf shall either repair or replace the affected area of the Product in accordance with the terms of this Warranty. FieldTurf's sole liability under this Warranty shall be limited to either repair or replacement of the affected area of the Product, at its sole discretion, and FieldTurf shall have no other obligations or liabilities with respect to defects of the Product. FieldTurf will, at FieldTurf's option, either repair or replace the affected area to the extent required to meet the Warranty period, but no cash refunds will be made. This Warranty shall commence upon the date of completion indicated in this Warranty. The accompanying Warranty service will not come into effect unless and until FieldTurf's Certificate of Completion is sent for validation to the corporate office of FieldTurf indicated herein within thirty (30) days of the date of completion or Purchaser's first use, whichever occurs first. In all cases, the Warranty shall be deemed to commence upon the date of completion indicated in this Warranty. The acceptance form of the terms and conditions contained in FieldTurf's Maintenance Guidelines must also be provided to FieldTurf's corporate office within thirty (30) days of completion of installation. This Warranty is limited to the remedies of repair or replacement, which shall constitute the exclusive remedies available under this Warranty; all other remedies or recourses which might otherwise be available are hereby waived by the Purchaser. FieldTurf will have no other obligations or liability for damages arising out of or in connection with the use or performance of the Product, including, but without limitation, damages for personal injury and/or economic losses. This Warranty shall not come into effect, and FieldTurf shall have no obligations under this Warranty, unless and until FieldTurf is paid in full for the Product to be warranted hereunder. **As concerns the designated high-traffic areas, which include but are not limited to: Home Plate, Pitcher's Mound, Base areas and paths; and all synthetic turf installed anywhere on the infield, the foregoing Warranty applies except that the applicable Warranty period shall be limited to a two (2) year Manufacturer's Warranty.**

Field Markings: sports markings to be defined

Other Exclusions

EXCEPT AS EXPRESSLY SET FORTH IN THE MANUFACTURER'S LIMITED WARRANTY ABOVE, FIELDTURF DISCLAIMS ALL OTHER WARRANTIES OF ANY KIND, EXPRESS OR IMPLIED, IN FACT OR IN LAW, INCLUDING, BUT NOT LIMITED TO, THE IMPLIED WARRANTIES OF MERCHANTABILITY AND FITNESS FOR A PARTICULAR PURPOSE.

THIS WARRANTY SHALL BECOME NULL AND VOID IF THE PURCHASER FAILS TO MAINTAIN THE FIELD IN ACCORDANCE WITH THE FIELDTURF MAINTENANCE GUIDELINES AND SCHEDULE PROVIDED BY FIELDTURF THEREIN. ALL MAINTENANCE SHALL BE PERFORMED BY FIELDTURF-TRAINED AND/OR FIELDTURF-AUTHORIZED MAINTENANCE PERSONNEL ONLY.

Furthermore, this Manufacturer's Limited Warranty ***does not cover***:

1. Any damage resulting, directly or indirectly, from *force majeure*, accident, misuse, intentional and unintentional abuse, infill displacement, neglect; or from usage, unintentional or otherwise, that cannot reasonably be considered as normal play or ordinary use of the Product. For purposes of this Warranty, normal play and ordinary use shall mean usage up to 3,000 hours per year of regular play and utilization for the sporting activities provided herein; normal play and ordinary use also includes a reasonable number of users or participants, but does not include repetitive marching, repetitive training or high-intensity drills on the same part of the field, especially in the areas including, but not limited to, home plate, pitcher's mound, base areas, base paths, soccer penalty mark/spot areas, goal areas, sideline areas and lacrosse crease areas, all of which require frequent maintenance in accordance with FieldTurf Maintenance Guidelines and which may require regular replacement. This Warranty is expressly conditioned upon the Customer completing and submitting the FieldTurf Maintenance Log provided in FieldTurf's Maintenance Guidelines.

SAMPLE

Manufacturer's Limited Warranty

2. Damage resulting from failure to maintain the Product in accordance with FieldTurf's Maintenance Guidelines provided to the Purchaser. The Purchaser shall keep a log of all maintenance performed on the Product and supply FieldTurf with a copy upon request.

3. Damage resulting from repair, attempted repair and/or maintenance by anyone other than FieldTurf, an authorized FieldTurf distributor or an authorized FieldTurf maintainer.

4. Damage due to causes which include, but are not limited to, the application of chemicals and/or cleaning agents, adhesive backing, dirt, traffic, negligence, vandalism, fire, flood, windstorm, animals, improper care and Acts of God.

5. Failure and/or improper design of the base; depression of the soil, subsurface or other matter upon which the base or Product rests; and any and all resulting damage to the Product arising therefrom.

6. FieldTurf does not warrant the percolation rate, long term planarity and/or compaction of the base which the product is installed. **FIELDTURF DISCLAIMS ALL WARRANTIES AS TO THE BASE, EXPRESS OR IMPLIED, AND ANY AND ALL RESULTING DAMAGE TO THE PRODUCT ARISING THEREFROM**.

7. Damage resulting from the use of improper footwear such as long-spiked track shoes, regular and repeated use of steel cleats, and flat-soled shoes. Standard molded soccer or football cleats are recommended.

All synthetic turf is subject to normal wear and tear, which does not constitute a manufacturing defect and is not covered by this Warranty. In addition to the other factors listed in this Warranty and without limitation, the extent of the wear and tear depends on the construction of synthetic turf (fiber face weight, stitch rate, fiber pile height and gauge, infill components and maintenance of the field) and the intensity of use of the synthetic turf. The Product will be stable to light fading with the maximum fading of the Product during the Warranty period not to exceed fifteen percent (15%) of color loss annually based upon an acceptable grey scale. This Warranty does not cover slight variations or gradations of color within the Product and/or face distortion. Normal behavior of the fiber and infill with respect to the wear pattern of a field is more fully explained in the "Field Settling" document, provided in the FieldTurf After-Sales Service Package.

FieldTurf disclaims all liability for incidental and consequential damages for breach of any express or implied warranty, including any implied warranty of merchantability, with respect to the Product. In the event that the Product be used for purposes other than the sporting activities provided herein or for any other uses for which FieldTurf has provided its written authorization, FieldTurf shall not be responsible for damages resulting therefrom and, therefore, this Warranty, as well as any and all applicable legal warranties, shall become **null and void** as Purchaser understands that FieldTurf has tested the Product for use in connection with the said sporting activities and/or uses, and that it may not have tested the Product for other such uses. Any Product repairs or replacements performed under the terms of this Warranty shall not extend the term of this Warranty.

Name of Purchaser:	**CLIENT NAME**	*Sporting Activities:*	Multi-Sport Use
Date of Completion:		*Installed by:*	FieldTurf USA, Inc.
Location:		*City:*	
Address:		*Zip:*	
State:		*Fax/email:*	
Tel:			
Signature:		*Name :*	
Date:		*Reference:*	8800

SAMPLE

This warranty is insured by a third party.

For more information please contact Customer Service at FieldTurf at the number listed below.

7445 Côte-de-Liesse Road Suite 200, Montreal, QC, Canada H4T 1G2 • Toll Free: 1-800-724-2969 •

Manufacturer's Limited Warranty

FieldTurf warrants that if **FieldTurf (product code)** ***CoolPlay*** **(**Product) for multi-sport use synthetic turf proves to be defective in material or installation workmanship, therefore, resulting in premature wear, during normal and ordinary use of the Product for the sporting activities provided herein or for any other uses for which FieldTurf has provided its written authorization, within **eight (8) years** from the date of completion of installation as indicated in this Warranty, FieldTurf shall either repair or replace the affected area of the Product in accordance with the terms of this Warranty. FieldTurf's sole liability under this Warranty shall be limited to either repair or replacement of the affected area of the Product, at its sole discretion, and FieldTurf shall have no other obligations or liabilities with respect to defects of the Product. FieldTurf will, at FieldTurf's option, either repair or replace the affected area to the extent required to meet the Warranty period, but no cash refunds will be made. This Warranty shall commence upon the date of completion indicated in this Warranty. The accompanying Warranty service will not come into effect unless and until FieldTurf's Certificate of Completion is sent for validation to the corporate office of FieldTurf indicated herein within thirty (30) days of the date of completion or Purchaser's first use, whichever occurs first. In all cases, the Warranty shall be deemed to commence upon the date of completion indicated in this Warranty. The acceptance form of the terms and conditions contained in FieldTurf's Maintenance Guidelines must also be provided to FieldTurf's corporate office within thirty (30) days of completion of installation. This Warranty is limited to the remedies of repair or replacement, which shall constitute the exclusive remedies available under this Warranty; all other remedies or recourses which might otherwise be available are hereby waived by the Purchaser. FieldTurf will have no other obligations or liability for damages arising out of or in connection with the use or performance of the Product, including, but without limitation, damages for personal injury and/or economic losses. This Warranty shall not come into effect, and FieldTurf shall have no obligations under this Warranty, unless and until FieldTurf is paid in full for the Product to be warranted hereunder.

Field Markings: (sport markings to be specified)

Other Exclusions

EXCEPT AS EXPRESSLY SET FORTH IN THE MANUFACTURER'S LIMITED WARRANTY ABOVE, FIELDTURF DISCLAIMS ALL OTHER WARRANTIES OF ANY KIND, EXPRESS OR IMPLIED, IN FACT OR IN LAW, INCLUDING, BUT NOT LIMITED TO, THE IMPLIED WARRANTIES OF MERCHANTABILITY AND FITNESS FOR A PARTICULAR PURPOSE.

THIS WARRANTY SHALL BECOME NULL AND VOID IF THE PURCHASER FAILS TO MAINTAIN THE FIELD IN ACCORDANCE WITH THE FIELDTURF MAINTENANCE GUIDELINES AND SCHEDULE PROVIDED BY FIELDTURF THEREIN. ALL MAINTENANCE SHALL BE PERFORMED BY FIELDTURF-TRAINED AND/OR FIELDTURF-AUTHORIZED MAINTENANCE PERSONNEL ONLY.

Furthermore, this Manufacturer's Limited Warranty ***does not cover****:*

1. Any damage resulting, directly or indirectly, from *force majeure*, accident, misuse, intentional and unintentional abuse, infill displacement, neglect; or from usage, unintentional or otherwise, that cannot reasonably be considered as normal play or ordinary use of the Product. For purposes of this Warranty, normal play and ordinary use shall mean usage up to 3,000 hours per year of regular play and utilization for the sporting activities provided herein; normal play and ordinary use also includes a reasonable number of users or participants, but does not include repetitive marching, repetitive training or high-intensity drills on the same part of the field, especially in the areas including, but not limited to, home plate, pitcher's mound, base areas, base paths, soccer penalty mark/spot areas, goal areas, sideline areas and lacrosse crease areas, all of which require frequent maintenance in accordance with FieldTurf Maintenance Guidelines and which may require regular replacement. This Warranty is expressly conditioned upon the Customer completing and submitting the FieldTurf Maintenance Log provided in FieldTurf's Maintenance Guidelines.
2. Damage resulting from failure to maintain the Product in accordance with FieldTurf's Maintenance Guidelines provided to the Purchaser. The Purchaser shall keep a log of all maintenance performed on the Product and supply FieldTurf with a copy upon request. Purchaser acknowledges that organic infill systems such as those in the *CoolPlay* product require specialized maintenance and care and given the nature of FieldTurf's *CoolPlay* product; this Warranty shall be conditioned upon the Purchaser carrying out regular *CoolPlay*-specific field maintenance as specified in FieldTurf's applicable maintenance manuals/guidelines

SAMPLE

Manufacturer's Limited Warranty

and upon maintaining written logs showing same. The Purchaser understands the particular *CoolPlay* requirements for maintaining proper infill levels and agrees, as necessary, to undertake responsibility for infill replenishment and maintenance anywhere infill is naturally displaced. Purchaser also acknowledges that the characteristics of the *CoolPlay* materials may result in naturally-occurring changes, including but not limited to, color and appearance of the materials within the infill layers; accordingly and without limitation, *CoolPlay* is subject to a change in color which usually presents as a rapidly-occurring lighter surface color, but which will not affect the mechanical properties or performance.

3. Damage resulting from repair, attempted repair and/or maintenance by anyone other than FieldTurf, an authorized FieldTurf distributor or an authorized FieldTurf maintainer.
4. Damage due to causes which include, but are not limited to, the application of chemicals and/or cleaning agents, adhesive backing, dirt, traffic, negligence, vandalism, fire, flood, windstorm, animals, improper care and Acts of God.
5. Failure and/or improper design of the base; depression of the soil, subsurface or other matter upon which the base or Product rests; and any and all resulting damage to the Product arising therefrom.
6. FieldTurf does not warrant the percolation rate, long term planarity and/or compaction of the base which the product is installed. **FIELDTURF DISCLAIMS ALL WARRANTIES AS TO THE BASE, EXPRESS OR IMPLIED, AND ANY AND ALL RESULTING DAMAGE TO THE PRODUCT ARISING THEREFROM**.
7. Damage resulting from the use of improper footwear such as long-spiked track shoes, regular and repeated use of steel cleats, and flat-soled shoes. Standard molded soccer or football cleats are recommended.

All synthetic turf is subject to normal wear and tear, which does not constitute a manufacturing defect and is not covered by this Warranty. In addition to the other factors listed in this Warranty and without limitation, the extent of the wear and tear depends on the construction of synthetic turf (fiber face weight, stitch rate, fiber pile height and gauge, infill components and maintenance of the field) and the intensity of use of the synthetic turf. The Product will be stable to light fading with the maximum fading of the Product during the Warranty period not to exceed fifteen percent (15%) of color loss annually based upon an acceptable grey scale. This Warranty does not cover slight variations or gradations of color within the Product and/or face distortion. Normal behavior of the fiber and infill with respect to the wear pattern of a field is more fully explained in the "Field Settling" document, provided in the FieldTurf After-Sales Service Package.

FieldTurf disclaims all liability for incidental and consequential damages for breach of any express or implied warranty, including any implied warranty of merchantability, with respect to the Product. In the event that the Product be used for purposes other than the sporting activities provided herein or for any other uses for which FieldTurf has provided its written authorization, FieldTurf shall not be responsible for damages resulting therefrom and, therefore, this Warranty, as well as any and all applicable legal warranties, shall become **null and void** as Purchaser understands that FieldTurf has tested the Product for use in connection with the said sporting activities and/or uses, and that it may not have tested the Product for other such uses. Any Product repairs or replacements performed under the terms of this Warranty shall not extend the term of this Warranty.

Name of Purchaser:	*Sporting Activities:*	Multi-Sport Use
Date of Completion:	*Installed by:*	FieldTurf USA, Inc.
Location:	*City:*	
Address:	*Zip:*	
State:	*Fax/email:*	
Tel:		
Signature:	*Name :*	
Date:	*Reference:*	

Disclaimer. *The information in this document is subject to change without notice and should not be construed as a commitment by FieldTurf USA, Inc. FieldTurf assumes no responsibility for any errors that may appear in this document.*

SAMPLE

This warranty is insured by a third party.

For more information please contact Customer Service at FieldTurf at the number listed below.

7445 Côte-de-Liesse Road Suite 200, Montreal, QC, Canada H4T 1G2 • Toll Free: 1-800-724-2969 •

FieldTurf
A Tarkett Sports Company

Manufacturer's Limited Warranty

FieldTurf warrants that if **FieldTurf FTCORE-** (Product) for multi-sport use synthetic turf proves to be defective in material, installation workmanship, therefore resulting in premature wear, during normal and ordinary use of the Product for the sporting activities provided herein or for any other uses for which FieldTurf has provided its written authorization, within **ten (10) years** from the date of completion of installation as indicated in this Warranty, FieldTurf shall either repair or replace the affected area of the Product in accordance with the terms of this Warranty. FieldTurf's sole liability under this Warranty shall be limited to either repair or replacement of the affected area of the Product, at its sole discretion, and FieldTurf shall have no other obligations or liabilities with respect to defects of the Product. FieldTurf will, at FieldTurf's option, either repair or replace the affected area to the extent required to meet the Warranty period, but no cash refunds will be made. This Warranty shall commence upon the date of completion indicated in this Warranty. The accompanying Warranty service will not come into effect unless and until FieldTurf's Certificate of Completion is sent for validation to the corporate office of FieldTurf indicated herein within thirty (30) days of the date of completion or Purchaser's first use, whichever occurs first. In all cases, the Warranty shall be deemed to commence upon the date of completion indicated in this Warranty. The acceptance form of the terms and conditions contained in FieldTurf's Maintenance Guidelines must also be provided to FieldTurf's corporate office within thirty (30) days of completion of installation. This Warranty is limited to the remedies of repair or replacement, which shall constitute the exclusive remedies available under this Warranty; all other remedies or recourses which might otherwise be available are hereby waived by the Purchaser. FieldTurf will have no other obligations or liability for damages arising out of or in connection with the use or performance of the Product, including, but without limitation, damages for personal injury and/or economic losses. This Warranty shall not come into effect, and FieldTurf shall have no obligations under this Warranty, unless and until FieldTurf is paid in full for the Product to be warranted hereunder.

Field Markings: (sport markings to be specified)

Other Exclusions

EXCEPT AS EXPRESSLY SET FORTH IN THE MANUFACTURER'S LIMITED WARRANTY ABOVE, FIELDTURF DISCLAIMS ALL OTHER WARRANTIES OF ANY KIND, EXPRESS OR IMPLIED, IN FACT OR IN LAW, INCLUDING, BUT NOT LIMITED TO, THE IMPLIED WARRANTIES OF MERCHANTABILITY AND FITNESS FOR A PARTICULAR PURPOSE.

THIS WARRANTY SHALL BECOME NULL AND VOID IF THE PURCHASER FAILS TO MAINTAIN THE FIELD IN ACCORDANCE WITH THE FIELDTURF MAINTENANCE GUIDELINES AND SCHEDULE PROVIDED BY FIELDTURF THEREIN. ALL MAINTENANCE SHALL BE PERFORMED BY FIELDTURF-TRAINED AND/OR FIELDTURF-AUTHORIZED MAINTENANCE PERSONNEL ONLY.

Furthermore, this Manufacturer's Limited Warranty ***does not cover***:

1. Any damage resulting, directly or indirectly, from *force majeure*, accident, misuse, intentional and unintentional abuse, infill displacement, neglect; or from usage, unintentional or otherwise, that cannot reasonably be considered as normal play or ordinary use of the Product. For purposes of this Warranty, normal play and ordinary use shall mean usage up to 3,000 hours per year of regular play and utilization for the sporting activities provided herein; normal play and ordinary use also includes a reasonable number of users or participants, but does not include repetitive marching, repetitive training or high-intensity drills on the same part of the field, especially in the areas including, but not limited to, home plate, pitcher's mound, base areas, base paths, soccer penalty mark/spot areas, goal areas, sideline areas and lacrosse crease areas, all of which require frequent maintenance in accordance with FieldTurf Maintenance Guidelines and which may require regular replacement. This Warranty is expressly conditioned upon the Customer completing and submitting the FieldTurf Maintenance Log provided in FieldTurf's Maintenance Guidelines.

2. Damage resulting from failure to maintain the Product in accordance with FieldTurf's Maintenance Guidelines provided to the Purchaser. The Purchaser shall keep a log of all maintenance performed on the Product and supply FieldTurf with a copy upon request.

SAMPLE

Manufacturer's Limited Warranty

3. Damage resulting from repair, attempted repair and/or maintenance by anyone other than FieldTurf, an authorized FieldTurf distributor or an authorized FieldTurf maintainer.

4. Damage due to causes which include, but are not limited to, the application of chemicals and/or cleaning agents, adhesive backing, dirt, traffic, negligence, vandalism, fire, flood, windstorm, animals, improper care and Acts of God.

5. Failure and/or improper design of the base; depression of the soil, subsurface or other matter upon which the base or Product rests; and any and all resulting damage to the Product arising therefrom.

6. FieldTurf does not warrant the percolation rate, long term planarity and/or compaction of the base which the product is installed. **FIELDTURF DISCLAIMS ALL WARRANTIES AS TO THE BASE, EXPRESS OR IMPLIED, AND ANY AND ALL RESULTING DAMAGE TO THE PRODUCT ARISING THEREFROM**.

7. Damage resulting from the use of improper footwear such as long-spiked track shoes, regular and repeated use of steel cleats, and flat-soled shoes. Standard molded soccer or football cleats are recommended.

All synthetic turf is subject to normal wear and tear, which does not constitute a manufacturing defect and is not covered by this Warranty. In addition to the other factors listed in this Warranty and without limitation, the extent of the wear and tear depends on the construction of synthetic turf (fiber face weight, stitch rate, fiber pile height and gauge, infill components and maintenance of the field) and the intensity of use of the synthetic turf. The Product will be stable to light fading with the maximum fading of the Product during the Warranty period not to exceed fifteen percent (15%) of color loss annually based upon an acceptable grey scale. This Warranty does not cover slight variations or gradations of color within the Product and/or face distortion. Normal behavior of the fiber and infill with respect to the wear pattern of a field is more fully explained in the "Field Settling" document, provided in the FieldTurf After-Sales Service Package.

FieldTurf disclaims all liability for incidental and consequential damages for breach of any express or implied warranty, including any implied warranty of merchantability, with respect to the Product. In the event that the Product be used for purposes other than the sporting activities provided herein or for any other uses for which FieldTurf has provided its written authorization, FieldTurf shall not be responsible for damages resulting therefrom and, therefore, this Warranty, as well as any and all applicable legal warranties, shall become **null and void** as Purchaser understands that FieldTurf has tested the Product for use in connection with the said sporting activities and/or uses, and that it may not have tested the Product for other such uses. Any Product repairs or replacements performed under the terms of this Warranty shall not extend the term of this Warranty.

Name of Purchaser:	**CLIENT NAME**	*Sporting Activities:*	Multi-Sport Use
Date of Completion:		*Installed by:*	FieldTurf USA, Inc.
Location:		*City:*	
Address:		*Zip:*	
State:		*Fax/email:*	
Tel:			
Signature:		*Name :*	Darren Gill
Date:	August 8, 2018	*Reference:*	8800

SAMPLE

This warranty is insured by a third party.

For more information please contact Customer Service at FieldTurf at the number listed below.

7445 Côte-de-Liesse Road Suite 200, Montreal, QC, Canada H4T 1G2 • Toll Free: 1-800-724-2969 •

Disclaimer. *The information in this document is subject to change without notice and should not be construed as a commitment by FieldTurf USA, Inc. FieldTurf assumes no responsibility for any errors that may appear in this document.*

Manufacturer's Limited Warranty

FieldTurf warrants that if the **FieldTurf EasyField** ("Product") for multi-sport use synthetic turf proves to be defective in material or initial installation workmanship, resulting in premature wear, during normal and ordinary use of the Product for the sporting activities provided herein, or for any other uses for which FieldTurf provides its written authorization, within one (1) year from the Date of Purchase (as indicated in this Warranty), FieldTurf shall either repair or replace the affected area of the Product in accordance with the terms of this Warranty. FieldTurf's sole liability under this Warranty shall be limited to either repair or replacement of the affected area of the Product, at its sole discretion, and FieldTurf shall have no other obligations or liabilities with respect to defects of the Product. FieldTurf will, at FieldTurf's option, either repair or replace the affected area to the extent required to meet the Warranty period, but no cash refunds will be made**.** This Warranty shall commence upon the Date of Purchase indicated in this Warranty. This Warranty is limited to the remedies of repair or replacement, which shall constitute the exclusive remedies available under this Warranty; all other remedies or recourse which might otherwise be available are hereby waived by the Purchaser. FieldTurf will have no other obligations or liability for damages arising out of or in connection with the use or performance of the Product, including, without limitation, damages for personal injury, economic losses and/or damages related to base/subgrade, utilities, business interruption, lost revenue, increased costs, and downtime costs. In no event shall FieldTurf be liable for indirect, special, consequential and/or incidental damages of any kind, no matter what the cause. This Warranty shall not come into effect, and FieldTurf shall have no obligations under this Warranty, unless and until FieldTurf is paid in full for the Product to be warranted hereunder.

Any modification to the Product may void this warranty. Should the Product be discontinued, FieldTurf will replace the defective material with a FieldTurf product of equal value. Any product repairs or replacements performed under the terms of this warranty shall not lead to any extension whatsoever of the warranty period. This warranty is exclusive to the original purchaser, is not transferable, and in lieu of all other warranties, expressed or implied, and all other remedies, guarantees and/or liabilities arising by law or otherwise.

Other Exclusions

EXCEPT AS EXPRESSLY SET FORTH IN THE MANUFACTURER'S LIMITED WARRANTY ABOVE, FIELDTURF DISCLAIMS ALL OTHER WARRANTIES OF ANY KIND, EXPRESS OR IMPLIED, IN FACT OR IN LAW, INCLUDING, BUT NOT LIMITED TO, THE IMPLIED WARRANTIES OF MERCHANTABILITY AND FITNESS FOR A PARTICULAR PURPOSE.

THIS WARRANTY SHALL BECOME NULL AND VOID IF (A) THE PURCHASER FAILS TO MAINTAIN THE FIELD IN ACCORDANCE WITH THE FIELDTURF MAINTENANCE GUIDELINES AND SCHEDULE PROVIDED BY FIELDTURF THEREIN AND/OR (B) THE PURCHASER FAILS TO INSTALL, REMOVE AND/OR RE-INSTALL THE PRODUCT IN ACCORDANCE WITH FIELDTURF'S RECOMMENDED INSTALLATION PROCEDURES.

Furthermore, this Manufacturer's Limited Warranty ***does not cover****:*

1. Any part of the installation procedure by the Purchaser and/or end user. FieldTurf is not responsible for any labor costs incurred for installation of the Product. This warranty does not cover damage caused by improper installation, negligence, water intrusion and/or flooding, abrasion, extreme heat, impact, cutting, freight damage, alteration, or any wear or damage caused by Acts of God.
2. Damage resulting from accident, *force majeure*, misuse, intentional and unintentional abuse, and neglect or from other than normal play and ordinary use of the Product. For purposes of this Warranty, normal play and ordinary use shall mean usage up to 3,000 hours per year of regular play and utilization for the sporting activities provided herein; normal play and ordinary use also includes a reasonable number of users or participants, but does not include repetitive marching, repetitive training or high-intensity drills on the same part of the field, especially in the areas of, but not limited to, home plate, pitcher's mound, base areas, base paths, soccer penalty mark/spot areas, goal areas, sideline areas and lacrosse crease areas, all of which require frequent maintenance in accordance with FieldTurf Maintenance Guidelines and may require regular replacement.
3. Damage resulting from failure to maintain the Product in accordance with FieldTurf's Maintenance Guidelines provided to the Purchaser, a copy of which has been made available to Purchaser. Purchaser shall keep a log of all maintenance performed on the Product and supply FieldTurf with a copy upon request.

Manufacturer's Limited Warranty

4. Damage resulting from the Purchaser's failure to install, remove and/or re-install the Product in accordance with FieldTurf's Recommended Installation Procedures, a copy of which has been made available to Purchaser. Purchaser shall limit Product conversions, including installation, removal and re-installation to a reasonable and suitable number of conversions, in the sole discretion of FieldTurf, as the failure of Purchaser to limit all such Product conversions to a reasonable and suitable number may cause damage to the Product, which is not covered under this Warranty. Purchaser shall keep a log of all Product conversions.
5. Damage resulting from repair, attempted repair and/or maintenance by anyone other than FieldTurf or an authorized FieldTurf distributor or authorized FieldTurf maintainer.
6. Damage due to causes which include, but are not limited to, the application of chemicals and/or cleaning agents, adhesive backing, dirt, traffic, negligence, vandalism, fire, flood, windstorm, animals, improper care and Acts of God.
7. Failure and/or improper design of the base; depression of the soil, subsurface or other matter upon which the base or Product rests; and any and all resulting damage to the Product arising therefrom.
8. FieldTurf does not warrant the percolation rate, long term planarity and/or compaction of the base which the product is installed. **FIELDTURF DISCLAIMS ALL WARRANTIES AS TO THE BASE, EXPRESS OR IMPLIED, AND ANY AND ALL RESULTING DAMAGE TO THE PRODUCT ARISING THEREFROM**.
9. Damage resulting from the use of improper footwear such as long-spiked track shoes, regular and repeated use of steel cleats, and flat-soled shoes. Standard molded soccer or football cleats are recommended.
10. Any additional warranties and/or promises offered by a third party. No unauthorized person, fabricator, installer, agent or employee of FieldTurf is entitled to assume any liability on behalf of FieldTurf relating to the sale of the Product or has the authority to increase or alter the obligations or limitations of this warranty.

All synthetic turf is subject to normal wear and tear, which is not a manufacturing defect and is not covered by this Warranty. In addition to the other factors listed in this Warranty, wear and tear depends on, without limitation, the construction of synthetic turf (fiber face weight, stitch rate, fiber pile height and gauge, and maintenance of the field) and the intensity of use of the synthetic turf. The Product will be stable to light fading with the maximum fading of the Product during the Warranty period not to exceed fifteen percent (15%) of color loss annually based upon an acceptable grey scale. This Warranty does not cover slight variations or gradations of color within the Product and/or face distortion.

FieldTurf disclaims all liability for incidental and consequential damages for breach of any express or implied warranty, including any implied warranty of merchantability, with respect to the Product. In the event that the Product is used for purposes other than the sporting activities provided herein or any other uses for which FieldTurf gives its written authorization, it being understood that FieldTurf has tested the Product for use in connection with these sporting activities and may not have tested it for other uses, FieldTurf shall not be responsible for any and all damages incurred and the Manufacturer's Limited Warranty, as well as all legal warranties, shall become null and void. Any Product repairs or replacements performed under the terms of this Warranty shall not extend the term of this Warranty.

Name of Purchaser:	**CLIENT NAME**	*Sporting Activities:*	Multi-Sport Use
Date of Completion:		*Installed by:*	FieldTurf USA, Inc.
Location:		*City:*	
Address:		*Zip:*	
State:		*Fax/email:*	
Tel:			
Signature:		*Name :*	Darren Gill
Date:	March 6, 2019	*Reference:*	8800

This warranty is insured by a third party.

For more information please contact Customer Service at FieldTurf at the number listed below.

7445 Côte-de-Liesse Road Suite 200, Montreal, QC, Canada H4T 1G2 • Toll Free: 1-800-724-2969 •

Manufacturer's Limited Warranty

FieldTurf warrants that if **FieldTurf (poduct code)** (Product) for multi-sport use synthetic turf proves to be defective in material, installation workmanship, therefore resulting in premature wear, during normal and ordinary use of the Product for the sporting activities provided herein or for any other uses for which FieldTurf has provided its written authorization, within **ten (10) years** from the date of completion of installation as indicated in this Warranty (the first eight (8) years to be insured and the final two (2) years to be a manufacturer's warranty), FieldTurf shall either repair or replace the affected area of the Product in accordance with the terms of this Warranty. FieldTurf's sole liability under this Warranty shall be limited to either repair or replacement of the affected area of the Product, at its sole discretion, and FieldTurf shall have no other obligations or liabilities with respect to defects of the Product. FieldTurf will, at FieldTurf's option, either repair or replace the affected area to the extent required to meet the Warranty period, but no cash refunds will be made. This Warranty shall commence upon the date of completion indicated in this Warranty. The accompanying Warranty service will not come into effect unless and until FieldTurf's Certificate of Completion is sent for validation to the corporate office of FieldTurf indicated herein within thirty (30) days of the date of completion or Purchaser's first use, whichever occurs first. In all cases, the Warranty shall be deemed to commence upon the date of completion indicated in this Warranty. The acceptance form of the terms and conditions contained in FieldTurf's Maintenance Guidelines must also be provided to FieldTurf's corporate office within thirty (30) days of completion of installation. This Warranty is limited to the remedies of repair or replacement, which shall constitute the exclusive remedies available under this Warranty; all other remedies or recourses which might otherwise be available are hereby waived by the Purchaser. FieldTurf will have no other obligations or liability for damages arising out of or in connection with the use or performance of the Product, including, but without limitation, damages for personal injury and/or economic losses. This Warranty shall not come into effect, and FieldTurf shall have no obligations under this Warranty, unless and until FieldTurf is paid in full for the Product to be warranted hereunder.

Field Markings: Football, Soccer

Other Exclusions

EXCEPT AS EXPRESSLY SET FORTH IN THE MANUFACTURER'S LIMITED WARRANTY ABOVE, FIELDTURF DISCLAIMS ALL OTHER WARRANTIES OF ANY KIND, EXPRESS OR IMPLIED, IN FACT OR IN LAW, INCLUDING, BUT NOT LIMITED TO, THE IMPLIED WARRANTIES OF MERCHANTABILITY AND FITNESS FOR A PARTICULAR PURPOSE.

THIS WARRANTY SHALL BECOME NULL AND VOID IF THE PURCHASER FAILS TO MAINTAIN THE FIELD IN ACCORDANCE WITH THE FIELDTURF MAINTENANCE GUIDELINES AND SCHEDULE PROVIDED BY FIELDTURF THEREIN. ALL MAINTENANCE SHALL BE PERFORMED BY FIELDTURF-TRAINED AND/OR FIELDTURF-AUTHORIZED MAINTENANCE PERSONNEL ONLY.

Furthermore, this Manufacturer's Limited Warranty ***does not cover***:

1. Any damage resulting, directly or indirectly, from *force majeure*, accident, misuse, intentional and unintentional abuse, infill displacement, neglect; or from usage, unintentional or otherwise, that cannot reasonably be considered as normal play or ordinary use of the Product. For purposes of this Warranty, normal play and ordinary use shall mean usage up to 3,000 hours per year of regular play and utilization for the sporting activities provided herein; normal play and ordinary use also includes a reasonable number of users or participants, but does not include repetitive marching, repetitive training or high-intensity drills on the same part of the field, especially in the areas including, but not limited to, home plate, pitcher's mound, base areas, base paths, soccer penalty mark/spot areas, goal areas, sideline areas and lacrosse crease areas, all of which require frequent maintenance in accordance with FieldTurf Maintenance Guidelines and which may require regular replacement. This Warranty is expressly conditioned upon the Customer completing and submitting the FieldTurf Maintenance Log provided in FieldTurf's Maintenance Guidelines.

2. Damage resulting from failure to maintain the Product in accordance with FieldTurf's Maintenance Guidelines provided to the Purchaser. The Purchaser shall keep a log of all maintenance performed on the Product and supply FieldTurf with a copy upon request.

SAMPLE

Manufacturer's Limited Warranty

3. Damage resulting from repair, attempted repair and/or maintenance by anyone other than FieldTurf, an authorized FieldTurf distributor or an authorized FieldTurf maintainer.

4. Damage due to causes which include, but are not limited to, the application of chemicals and/or cleaning agents, adhesive backing, dirt, traffic, negligence, vandalism, fire, flood, windstorm, animals, improper care and Acts of God; and damage due to due floods and flooding, the introduction of dirt or other contaminants, Acts of God and/or other causes leading to the contamination of the Product.

5. Failure and/or improper design of the base; depression of the soil, subsurface or other matter upon which the base or Product rests; and any and all resulting damage to the Product arising therefrom.

6. FieldTurf does not warrant the percolation rate, long term planarity and/or compaction of the base which the product is installed. **FIELDTURF DISCLAIMS ALL WARRANTIES AS TO THE BASE, EXPRESS OR IMPLIED, AND ANY AND ALL RESULTING DAMAGE TO THE PRODUCT ARISING THEREFROM**.

7. Damage resulting from the use of improper footwear such as long-spiked track shoes, regular and repeated use of steel cleats, and flat-soled shoes. Standard molded soccer or football cleats are recommended.

8. Damage resulting from the inadequate installation, improper maintenance and/or other failure of any third party shock pad or underlayment pad installed beneath the Product, including, but not limited to, detachment of the Product caused by expansion and/or contraction of the third party shock pad or underlayment pad.

All synthetic turf is subject to normal wear and tear, which does not constitute a manufacturing defect and is not covered by this Warranty. In addition to the other factors listed in this Warranty and without limitation, the extent of the wear and tear depends on the construction of synthetic turf (fiber face weight, stitch rate, fiber pile height and gauge, infill components and maintenance of the field) and the intensity of use of the synthetic turf. The Product will be stable to light fading with the maximum fading of the Product during the Warranty period not to exceed fifteen percent (15%) of color loss annually based upon an acceptable grey scale. This Warranty does not cover slight variations or gradations of color within the Product and/or face distortion. Normal behavior of the fiber and infill with respect to the wear pattern of a field is more fully explained in the "Field Settling" document, provided in the FieldTurf After-Sales Service Package.

FieldTurf disclaims all liability for incidental and consequential damages for breach of any express or implied warranty, including any implied warranty of merchantability, with respect to the Product. In the event that the Product be used for purposes other than the sporting activities provided herein or for any other uses for which FieldTurf has provided its written authorization, FieldTurf shall not be responsible for damages resulting therefrom and, therefore, this Warranty, as well as any and all applicable legal warranties, shall become **null and void** as Purchaser understands that FieldTurf has tested the Product for use in connection with the said sporting activities and/or uses, and that it may not have tested the Product for other such uses. Any Product repairs or replacements performed under the terms of this Warranty shall not extend the term of this Warranty.

Name of Purchaser:	**CLIENT NAME**	*Sporting Activities:*	Multi-Sport Use
Date of Completion:		*Installed by:*	FieldTurf USA, Inc.
Location:		*City:*	
Address:		*Zip:*	
State:		*Fax/email:*	
Tel:			
Signature:		*Name :*	Darren Gill
Date:	December 4, 2019	*Reference:*	8800

This warranty is insured by a third party.

For more information please contact Customer Service at FieldTurf at the number listed below.

7445 Côte-de-Liesse Road Suite 200, Montreal, QC, Canada H4T 1G2 • Toll Free: 1-800-724-2969 •

FieldTurf
A Tarkett Sports Company

Manufacturer's Limited Warranty

FieldTurf warrants that if **FieldTurf (product code)** ***PureFill*** (Product) for multi-sport use synthetic turf proves to be defective in material or installation workmanship, therefore, resulting in premature wear, during normal and ordinary use of the Product for the sporting activities provided herein or for any other uses for which FieldTurf has provided its written authorization, within **eight (8) years** from the date of completion of installation as indicated in this Warranty, FieldTurf shall either repair or replace the affected area of the Product in accordance with the terms of this Warranty. FieldTurf's sole liability under this Warranty shall be limited to either repair or replacement of the affected area of the Product, at its sole discretion, and FieldTurf shall have no other obligations or liabilities with respect to defects of the Product. FieldTurf will, at FieldTurf's option, either repair or replace the affected area to the extent required to meet the Warranty period, but no cash refunds will be made**.** This Warranty shall commence upon the date of completion indicated in this Warranty. The accompanying Warranty service will not come into effect unless and until FieldTurf's Certificate of Completion is sent for validation to the corporate office of FieldTurf indicated herein within thirty (30) days of the date of completion or Purchaser's first use, whichever occurs first. In all cases, the Warranty shall be deemed to commence upon the date of completion indicated in this Warranty. The acceptance form of the terms and conditions contained in FieldTurf's Maintenance Guidelines must also be provided to FieldTurf's corporate office within thirty (30) days of completion of installation. This Warranty is limited to the remedies of repair or replacement, which shall constitute the exclusive remedies available under this Warranty; all other remedies or recourses which might otherwise be available are hereby waived by the Purchaser. FieldTurf will have no other obligations or liability for damages arising out of or in connection with the use or performance of the Product, including, but without limitation, damages for personal injury and/or economic losses. This Warranty shall not come into effect, and FieldTurf shall have no obligations under this Warranty, unless and until FieldTurf is paid in full for the Product to be warranted hereunder.

Field Markings: (sport markings to be specified)

Other Exclusions

EXCEPT AS EXPRESSLY SET FORTH IN THE MANUFACTURER'S LIMITED WARRANTY ABOVE, FIELDTURF DISCLAIMS ALL OTHER WARRANTIES OF ANY KIND, EXPRESS OR IMPLIED, IN FACT OR IN LAW, INCLUDING, BUT NOT LIMITED TO, THE IMPLIED WARRANTIES OF MERCHANTABILITY AND FITNESS FOR A PARTICULAR PURPOSE.

THIS WARRANTY SHALL BECOME NULL AND VOID IF THE PURCHASER FAILS TO MAINTAIN THE FIELD IN ACCORDANCE WITH THE FIELDTURF MAINTENANCE GUIDELINES AND SCHEDULE PROVIDED BY FIELDTURF THEREIN. ALL MAINTENANCE SHALL BE PERFORMED BY FIELDTURF-TRAINED AND/OR FIELDTURF-AUTHORIZED MAINTENANCE PERSONNEL ONLY.

Furthermore, this Manufacturer's Limited Warranty ***does not cover****:*

1. Any damage resulting, directly or indirectly, from *force majeure*, accident, misuse, intentional and unintentional abuse, infill displacement, neglect; or from usage, unintentional or otherwise, that cannot reasonably be considered as normal play or ordinary use of the Product. For purposes of this Warranty, normal play and ordinary use shall mean usage up to 3,000 hours per year of regular play and utilization for the sporting activities provided herein; normal play and ordinary use also includes a reasonable number of users or participants, but does not include repetitive marching, repetitive training or high-intensity drills on the same part of the field, especially in the areas including, but not limited to, home plate, pitcher's mound, base areas, base paths, soccer penalty mark/spot areas, goal areas, sideline areas and lacrosse crease areas, all of which require frequent maintenance in accordance with FieldTurf Maintenance Guidelines and which may require regular replacement. This Warranty is expressly conditioned upon the Customer completing and submitting the FieldTurf Maintenance Log provided in FieldTurf's Maintenance Guidelines.
2. Damage resulting from failure to maintain the Product in accordance with FieldTurf's Maintenance Guidelines provided to the Purchaser. The Purchaser shall keep a log of all maintenance performed on the Product and supply FieldTurf with a copy upon request. Purchaser acknowledges that organic infill systems such as those in the *PureFill* product require specialized maintenance and care and given the nature of

SAMPLE

FieldTurf
A Tarkett Sports Company

Manufacturer's Limited Warranty

FieldTurf's *PureFill* product, this Warranty shall be conditioned upon the Purchaser carrying out regular *PureFill*-specific field maintenance as specified in FieldTurf's applicable maintenance manuals/guidelines and upon maintaining written logs showing same. Purchaser understands the particular *PureFill* requirements for maintaining proper infill levels and agrees, as necessary, to undertake responsibility for infill replenishment and maintenance anywhere infill is naturally displaced. The Purchaser also acknowledges that the characteristics of the *PureFill* materials may result in naturally-occurring changes, including but not limited to, color and appearance of the materials within the infill layers; accordingly and without limitation, *PureFill* is subject to a change in color which usually presents as a rapidly-occurring lighter surface color, but which will not affect the mechanical properties or performance.

3. Damage resulting from repair, attempted repair and/or maintenance by anyone other than FieldTurf, an authorized FieldTurf distributor or an authorized FieldTurf maintainer.
4. Damage due to causes which include, but are not limited to, the application of chemicals and/or cleaning agents, adhesive backing, dirt, traffic, negligence, vandalism, fire, flood, windstorm, animals, improper care and Acts of God.
5. Failure and/or improper design of the base; depression of the soil, subsurface or other matter upon which the base or Product rests; and any and all resulting damage to the Product arising therefrom.
6. FieldTurf does not warrant the percolation rate, long term planarity and/or compaction of the base which the product is installed. **FIELDTURF DISCLAIMS ALL WARRANTIES AS TO THE BASE, EXPRESS OR IMPLIED, AND ANY AND ALL RESULTING DAMAGE TO THE PRODUCT ARISING THEREFROM**.
7. Damage resulting from the use of improper footwear such as long-spiked track shoes, regular and repeated use of steel cleats, and flat-soled shoes. Standard molded soccer or football cleats are recommended.

All synthetic turf is subject to normal wear and tear, which does not constitute a manufacturing defect and is not covered by this Warranty. In addition to the other factors listed in this Warranty and without limitation, the extent of the wear and tear depends on the construction of synthetic turf (fiber face weight, stitch rate, fiber pile height and gauge, infill components and maintenance of the field) and the intensity of use of the synthetic turf. The Product will be stable to light fading with the maximum fading of the Product during the Warranty period not to exceed fifteen percent (15%) of color loss annually based upon an acceptable grey scale. This Warranty does not cover slight variations or gradations of color within the Product and/or face distortion. Normal behavior of the fiber and infill with respect to the wear pattern of a field is more fully explained in the "Field Settling" document, provided in the FieldTurf After-Sales Service Package.

FieldTurf disclaims all liability for incidental and consequential damages for breach of any express or implied warranty, including any implied warranty of merchantability, with respect to the Product. In the event that the Product be used for purposes other than the sporting activities provided herein or for any other uses for which FieldTurf has provided its written authorization, FieldTurf shall not be responsible for damages resulting therefrom and, therefore, this Warranty, as well as any and all applicable legal warranties, shall become **null and void** as Purchaser understands that FieldTurf has tested the Product for use in connection with the said sporting activities and/or uses, and that it may not have tested the Product for other such uses. Any Product repairs or replacements performed under the terms of this Warranty shall not extend the term of this Warranty.

Name of Purchaser:		*Sporting Activities:*	Multi-Sport Use
Date of Completion:		*Installed by:*	FieldTurf USA, Inc.
Location:		*City:*	
Address:		*Zip:*	
State:		*Fax/email:*	
Tel:			
Signature:		*Name :*	
Date:		*Reference:*	

Disclaimer. *The information in this document is subject to change without notice and should not be construed as a commitment by FieldTurf USA, Inc. FieldTurf assumes no responsibility for any errors that may appear in this document.*

This warranty is insured by a third party.
For more information please contact Customer Service at FieldTurf at the number listed below.
7445 Côte-de-Liesse Road Suite 200, Montreal, QC, Canada H4T 1G2 • Toll Free: 1-800-724-2969 •

SAMPLE

TURF CHIEF - WARRANTY

Thank you for purchasing the Turf Chief from Friction Sweepers International ("FSI").

This Limited Warranty applies only to the physical goods (the "Physical Goods") purchased from FSI.

This Limited Warranty covers any defects in material or workmanship under normal use during the Warranty Period. During the Warranty Period, FSI will repair or replace, at no cost, products, or parts of a product that prove defective because of improper material or workmanship under normal use and maintenance. Normal use is outlined in the Turf Chief Operator's Manual.

FSI will correct the problem by either repairing the product at no cost using new or refurbished replacement parts or by providing a replacement product at no cost. No cash refund will be made.

The Warranty Period for the Physical Goods purchased from FSI is five years from the date of purchase. A replacement Physical Good assumes the remaining warranty of the original Physical Good.

This Limited Warranty applies to a fault in the equipment caused by faulty labour or materials in the manufacture of the Physical Goods and does not extend to;

a) Physical Goods altered or repaired in any way other than through Friction Sweepers International,
b) B) Physical Goods that have not complied with the normal use outlined in the Operators Manual and that have been operated in a way that causes excessive wear or damage,
c) Physical Goods which are purchased second-hand.

To obtain this Limited Warranty service, you must first contact us to determine the problem and the most appropriate solution.

Friction Sweepers International Pty Ltd

www.frictionsweepers.com p: +61 (0) 409 173 196 e: brook@frictionsweepers.com

LIMITED WARRANTY

Sportsfield Specialties, Inc. warrants this product to be free of defects in materials and workmanship for a period of twelve months from the original delivery date. This warranty does not cover components or parts caused to be deficient due to normal wear, misuse, accidents, or lack of proper maintenance.

Any parts thought to be defective must be returned to Sportsfield Specialties along with the unit for warranty consideration. The owner/operator will be responsible for the expense of returning the above items to Sportsfield Specialties for warranty service as well as the expense for returning same after repair or replacement. A Return Authorization Number must be obtained and clearly marked on all packages of parts requiring return to the factory.

The obligation of Sportsfield Specialties, Inc under this limited warranty, to the extend allowed by law, is in lieu of all warranties, implied or expressed, INCLUDING WARRANTIES OF MECHANTAILITY AND FITNESS FOR A PARTICULAR PURPOSE and any liability of incidental and consequential damages with respect to the sale or use of the items warranted. Such incidental and consequential damages shall include but not be limited to: transportation charges other than normal freight charges; cost of installation other than cost approved by Sportsfield Specialties, Inc.; duty; taxes; charges from normal service or adjustment; loss of synthetic carpet or any other income, ; rental of substitute equipment, expenses due to loss, damage, detention or delay in delivery of equipment or parts resulting from the acts beyond the control of Sportsfield Specialties, Inc.

LIMITED WARRANTY SHALL NOT APPLY:

1. If the Equipment has been subjected to misapplication, abuse, misuse, negligence, fire or other accident.

2. If parts not made by Sportsfield Specialties have been used in connection with the unit, if, in the sole judgment of Sportsfield Specialties, Inc. such use affects its performance, stability or reliability.

3. If the unit has been altered or repaired in a manner which, in the sole judgment of Sportsfield Specialties, Inc., affects its performance, stability, or reliability.

4. To normal maintenance service and normal replacement items such as brushes, tines, etc. or to normal deterioration of exterior finish due to use or exposure.

5. To expendable or wear items that in the company's sole judgment is a wear item.

This warranty gives you specific legal rights, and you may also have other legal rights which vary from state to state.

WARRANTY CARD TO BE COPIED AND MAILED OR FAXED TO (Please retain copy for your records):

Sportsfield Specialties, Inc.
Attn: Warranty Department
P.O. Box 231
41155 State Highway 10
Delhi, NY 13753
(607) 746-8481 - Fax
(888) 975-3343 - Phone

Customer Name: _____

Customer Address: _____

Customer Contact Information:

Phone: _____

Fax: _____

E-mail: _____

Date of Arrival at Customer Location: _____

Model Number (See Serial Plate – Front of Unit): _____

Serial Number (See Serial Plate – Front of Unit): _____

THE ABOVE WARRANTY CARD MUST BE MAILED OR FAXED WITHIN (10) DAYS OF RECEIPT AT OWNER'S FACILITY.

Tarkett Sports Canada Inc. ("**Tarkett**") warrants to the purchaser**,** that the product**, ThermaGreen SportLite™ ("SportLite")** will conform to the product specifications and shall be free from defects in material workmanship for a period of twenty (20) years from the date indicated in this warranty. When properly installed and maintained **SportLite™** will not suffer significant deterioration, splitting, and cracking due to normal atmospheric conditions for the period of this warranty. The accompanying Warranty service will not come into effect unless and until full and final payment has been received.

This warranty does not cover any damage or defects to **SportLite™** found to have been a result of misuse, abuse or conditions existing after manufacture including, but not limited to, rough handling; malicious mischief; vandalism; sabotage; fire; acts of God; acts of the public enemy; acts of war or public rebellion; severe stress from any source; improper handling during transportation, unloading, storage, floating debris; damage due to machinery; foreign objects or animals.

Use and System

SportLite™, manufactured by Tarkett is used as a shock attenuation and drainage underlayment sheet in artificial grass systems ("**Intended Use**"). All ThermaGreen™ products are made of closed-cell cross linked polyethylene XLPE foam.

SportLite™ is always a component of a larger system consisting of:

- A compacted, stabilized, firm sub base;
- **SportLite™**
- Artificial grass surface; and
- Infill material like sand, rubber, EPDM, coated sand, etc.

THIS WARRANTY IS SUBJECT TO THE FOLLOWING CONDITIONS:

Installation:

SportLite™ shall have been transported, unloaded, stored and installed in accordance with product specifications and in such a manner so as to not cause any damage to the **SportLite™** product**.** If infill is used over the top of the **SportLite™** it shall be free from any foreign and/or sharp objects. The present warranty is expressly conditioned upon the **SportLite™** system being installed in strict compliance with manufacturer's specifications, including without limitation, installation of the appropriate infill amount; and the Customer having performed regular maintenance as outlined in the Tarkett maintenance guidelines. Moreover, **SportLite™** shall have been installed on compacted soil or granular base free of sharp protrusions and foreign objects.

Inspection & Maintenance:

The Customer must follow the guidelines stated in the Tarkett Maintenance Guidelines or if Tarkett is not the artificial turf supplier, whatever maintenance manual is provided by the artificial turf supplier. Notwithstanding, an acceptable maintenance schedule shall include, at a minimum, an annual visual inspection of the field. This Warranty is expressly conditioned upon the Customer completing and submitting an annual inspection/maintenance report to Tarkett.

Maximum Load:

Unusually heavy loads can change the characteristics of **SportLite™.** Regular maintenance machinery should not exceed a 25N/cm² (35psi) load.

Unintended Use and Other Exclusions:
Any damage resulting from usage, unintentional or otherwise, that cannot reasonably be considered as the Intended Usage of **SportLite™** or (ii) from improper or inadequate site drainage, including without limitation, lack of adequate drainage systems, gutters, channels, and/or water diversion mechanisms is expressly excluded from the present Warranty.

If any hydrocarbons are spilled on **SportLite™,** they must be removed immediately; otherwise, the Warranty shall become null and void.

Claim Procedure:
In the event circumstances are found to exist which a customer believes may give rise to a claim under this Warranty, the following procedure shall be followed:

(a) Provide Tarkett with written notice of the facts and circumstances of the claim within ten (10) days of becoming aware of said facts and circumstances, as per the notification procedure indicated herein.

(b) Within twenty (20) days of receipt of the notice described in paragraph (a), Tarkett shall notify the Customer whether it intends to send an authorized representative to inspect the allegedly defective product or that it does not conduct an inspection. If Tarkett determines, in its sole discretion, that the claim is not covered by this Warranty, the Customer shall pay the expenses incurred by Tarkett in making the inspection, including current per diem rates for personnel involved. **THE CUSTOMER SHALL NOT REPAIR, REPLACE, REMOVE, ALTER, OR DISTURB THE PRODUCT, NOR SHALL THE CUSTOMER ALLOW OR CAUSE ANYONE ELSE TO REPAIR, REPLACE, REMOVE, ALTER, OR DISTURB ANY PRODUCT PRIOR TO SUCH INSPECTION OR RECEIPT OF NOTICE BY TARKETT THAT IT ELECTS NOT TO INSPECT. ANY FAILURE TO STRICTLY COMPLY WITH THIS PARAGRAPH SHALL VOID THIS WARRANTY OR MAY LEAD TO A DETERMINATION THAT THE ALLEGED DEFECTS ARE NOT WITHIN THE SCOPE OF THIS WARRANTY**.

(c) If Tarkett determines that the alleged defects are covered by this Warranty, it shall, in its sole discretion, provide the Customer with replacement product. **THE REMEDIES PROVIDED HEREIN ARE THE EXCLUSIVE REMEDIES AVAILABLE UNDER THIS WARRANTY. NEITHER THIS WARRANTY NOR ANY RIGHTS HEREUNDER SHALL BE ASSIGNABLE WITHOUT TARKETT'S PRIOR CONSENT (AS PER THE NOTIFICATION PROCEDURE INDICATED HEREIN) TARKETTSHALL HAVE NO LIABILITY UNDER THIS WARRANTY TO THIRD PARTIES TO THIS AGREEMENT.**

THE WARRANTY SET FORTH ABOVE IS THE ONLY WARRANTY APPLICABLE TO THE SPORTLITE™ PRODUCT AND ALL OTHER WARRANTIES, EXPRESSED OR IMPLIED, INCLUDING, BUT NOT LIMITED TO, ANY WARRANTY OF MERCHANTABILITY OR FITNESS FOR A PARTICULAR PURPOSE ARE DISCLAIMED.

IN NO EVENT SHALL TARKETT BE LIABLE FOR ANY DIRECT, INDIRECT, INCIDENTAL, SPECIAL OR CONSEQUENTIAL DAMAGES (INCLUDING, WITHOUT LIMITATION, LOST PROFITS, BUSINESS INTERRUPTION DAMAGES, LOSS OF USE DAMAGES AND DAMAGE TO REPUTATION OR GOODWILL) FOR, RESULTING FROM, OR IN CONNECTION WITH, ANY LOSS RESULTING FROM THE USE OF SPORTLITE. I. IN NO EVENT, REGARDLESS OF THE FORM OF THE CLAIM OR CAUSE OF ACTION (WHETHER BASED IN CONTRACT, INFRINGEMENT, NEGLIGENCE, STRICT LIABILITY, OTHER TORT OR OTHERWISE),

SHALL TARKETT'S LIABILITY TO CUSTOMER AND/OR ANY THIRD PARTIES CLAIMING THROUGH CUSTOMER FOR DIRECT DAMAGES EXCEED THE PRICE PAID BY CUSTOMER FOR THE SPECIFIC PRODUCT GIVING RISE TO THE CLAIM OR CAUSE OF ACTION. EXCEPT FOR THE WARRANTY SET FORTH ABOVE, NO REPRESENTATION NOR ANY WARRANTY MADE BY ANY SALES OR OTHER REPRESENTATIVE OR ANY OTHER PERSON, CONCERNING SportLite™ SHALL BE BINDING UPON TARKETT.

Failure by Tarkett to insist upon strict adherence to any term of this Warranty on any occasion shall not be considered a waiver of Tarkett's rights or deprive Tarkett of the right thereafter to insist upon strict adherence of that terms or any other term of this Warranty. Any waiver of the terms and conditions of this Warranty shall be made in writing and signed by Tarkett.

NOTIFICATION PROCEDURE

Any notice of claim or request for Tarkett's consent to assignment under the present Warranty shall be made by registered or certified mail, return receipt requested, postage prepaid, addressed to **Tarkett Sports Canada Inc.**, **7445, Cote-de-Liesse, Suite 200, Montreal, Quebec, H4T 1G2**. The words "**WARRANTY CLAIM**" or "**CONSENT TO ASSIGNMENT OF WARRANTY**" shall be clearly indicated on the face of the envelope. Said notice shall contain at a minimum, the name and address of the Customer (or owner), the name and address of the installation, the name and address of the installer, the date upon which the material was purchased and either (i) the facts upon which the warranty claim is based; or (ii) the name and contact information of the proposed assignee as well as the reason for assignment. Failure to strictly comply with requirements of this paragraph shall render this Warranty null and void and the claim/assignment shall be rejected.

LIABILITY LIMIT

Both Tarkett liability for any damages, penalties indemnifications, liabilities, costs and expenses incurred as a result of any failure by Tarkett to meet its obligations under the contract between Tarkett and Purchaser is limited to the contract price.

If the replacement of the product is required, Tarkett will provide an experienced individual to oversee the re-installation of the **SportLite™** shock pad.

The provisions of this Warranty supersede and govern all other provisions of any contract between Tarkett and the Purchaser regarding the purchase, sale and performance of **SportLite™.**

Name of Purchaser:	
Date of Purchase:	*Installed by:*
Location:	*City:*
Address:	*Postal Code/Zip:*
Province/State:	*Fax/email:*
Tel:	
Signature:	*Name :*
Date:	*P.O. Number:*

WARRANTY

EASYTURF
A FieldTurf Company

MANUFACTURER'S LIMITED WARRANTY

EasyTurf warrants that if the EasyTurf FIT with attached pad ("Product") for multi-sport use synthetic turf proves to be defective in material, resulting in premature wear, during normal and ordinary use of the Product for the sporting activities provided herein, or for any other uses for which EasyTurf provides its written authorization, within five (5) years from the Date of Purchase (as indicated in this Warranty), EasyTurf shall either repair or replace the affected area of the Product in accordance with the terms of this Warranty and the following pro-rated schedule:

Year 1: One hundred percent (100%) of the repair or replacement cost.

Year 2: Seventy-five percent (75%) of the repair or replacement cost.

Year 3: Fifty percent (50%) of the repair or replacement cost.

Year 4: Twenty-five percent (25%) of the repair or replacement cost.

Year 5: Five percent (5%) of the repair or replacement cost.

NAME OF PURCHASER	INSTALLED BY		
ADDRESS	CITY	ST	ZIP
COUNTRY	TEL	FAX	
DATE OF COMPLETION	DATE	REFERENCE	

2750 La Mirada Dr., Vista, CA, 92081 • (866) 327-9887

WARRANTY DETAILS

EasyTurf's sole liability under this Warranty shall be limited to either repair or replacement product (limited to materials) for the affected area of the Product, at its sole discretion, and EasyTurf shall have no other obligations or liabilities with respect to defects of the Product. EasyTurf will, at EasyTurf's option, either repair or replace the affected area to the extent required to meet the Warranty period, but no cash refunds will be made. This Warranty shall commence upon the Date of Purchase indicated in this Warranty. This Warranty is limited to the remedies of repair or replacement, which shall constitute the exclusive remedies available under this Warranty; all other remedies or recourse which might otherwise be available are hereby waived by the Purchaser. EasyTurf will have no other obligations or liability for damages arising out of or in connection with the use or performance of the Product, including, without limitation, damages for personal injury, economic losses and/or damages related to base/subgrade, utilities, business interruption, lost revenue, increased costs, and downtime costs. In no event shall EasyTurf be liable for indirect, special, consequential and/or incidental damages of any kind, no matter what the cause. This Warranty shall not come into effect, and EasyTurf shall have no obligations under this Warranty, unless and until EasyTurf is paid in full for the Product to be warranted hereunder.

Any modification to the Product may void this Warranty. Should the Product be discontinued, EasyTurf will replace the defective material with a EasyTurf product of equal value. Any Product repairs or replacements performed under the terms of this Warranty shall not lead to any extension whatsoever of the Warranty period. This Warranty is exclusive to the original Purchaser, is not transferable, and in lieu of all other warranties, expressed or implied, and all other remedies, guarantees and/or liabilities arising by law or otherwise. This Warranty covers first quality Product only and does not extend to Product sold as irregulars, seconds or through any means other than the original purchase. EasyTurf's liability hereunder shall be limited to the original purchase price paid by Purchaser for the Product.

OTHER EXCLUSIONS

EXCEPT AS EXPRESSLY SET FORTH IN THE MANUFACTURER'S LIMITED WARRANTY ABOVE, EASYTURF DISCLAIMS ALL OTHER WARRANTIES OF ANY KIND, EXPRESS OR IMPLIED, IN FACT OR IN LAW, INCLUDING, BUT NOT LIMITED TO, THE IMPLIED WARRANTIES OF MERCHANTABILITY AND FITNESS FOR A PARTICULAR PURPOSE.

THIS WARRANTY SHALL BECOME NULL AND VOID IF (A) THE PURCHASER FAILS TO MAINTAIN THE FIELD IN ACCORDANCE WITH THE EASYTURF MAINTENANCE GUIDELINES AND SCHEDULE PROVIDED BY EASYTURF THEREIN AND/OR (B) THE PURCHASER FAILS TO INSTALL, REMOVE AND/OR RE-INSTALL THE PRODUCT IN ACCORDANCE WITH EASYTURF'S RECOMMENDED INSTALLATION PROCEDURES.

This Manufacturer's Limited Warranty ***does not cover*:**

1. Any part of the installation procedure. EasyTurf is not responsible for any labor costs incurred for installation of the Product and/or repair or replacement of the Product under this Warranty. This Warranty does not cover damage caused by improper installation, negligence, water intrusion and/or flooding, abrasion, extreme heat, impact, cutting, freight damage, alteration, or any wear or damage caused by Acts of God.

2. Damage resulting from accident, force majeure, misuse, intentional and unintentional abuse, neglect, repetitive use or repetitive activities, or from other than normal play and ordinary use of the Product. For purposes of this Warranty, normal play and ordinary use shall mean usage up to 3,000 hours per year of regular play and utilization for the sporting activities provided herein; normal play and ordinary use also includes a reasonable number of users or participants, but does not include repetitive marching, repetitive training, high use areas and/or high-intensity drills on the same part of the field, all of which require frequent maintenance in accordance with EasyTurf Maintenance Guidelines and may require regular replacement.

3. Damage resulting from failure to maintain the Product in accordance with EasyTurf's Maintenance Guidelines provided to the Purchaser, a copy of which has been made available to Purchaser. Purchaser shall keep a log of all maintenance performed on the Product and supply EasyTurf with a copy upon request.

4. Damage resulting from the Purchaser's failure to install the Product in accordance with EasyTurf's Recommended Installation Procedures, a copy of which has been made available to Purchaser.

5. Damage resulting from repair, attempted repair and/or maintenance by anyone other than EasyTurf or an authorized EasyTurf distributor or authorized EasyTurf maintainer.

6. Damage due to causes which include, but are not limited to, the application of chemicals and/or cleaning agents, adhesive backing, dirt, traffic, negligence, vandalism, fire, flood, windstorm, animals, improper care and Acts of God.

7. Failure and/or improper design of the base; depression of the soil, subsurface or other matter upon which the base or Product rests; and any and all resulting damage to the Product arising therefrom.

8. EasyTurf does not warrant the percolation rate, long term planarity and/or compaction of the base which the product is installed. EASYTURF DISCLAIMS ALL WARRANTIES AS TO THE BASE, EXPRESS OR IMPLIED, AND ANY AND ALL RESULTING DAMAGE TO THE PRODUCT ARISING THEREFROM.

9. Damage resulting from the use of improper or inappropriate footwear. Users and participants should wear standard molded cleats or other footwear appropriate for synthetic turf. The use of flat-soled shoes and/or other improper or inappropriate footwear may accelerate the wear of the Product.

10. Damage resulting from the use of the Product other than for the purpose for which it is intended.

11. Damage resulting from the use, placement and/or abrasion caused by athletic equipment and/or high-friction uses or activities.

12. Damage, melting and/or shrinking of the Product resulting from heat reflection or sources of extreme heat.

13. Damage caused by movement of the Product due to improper installation or improper securing of the edges of the Product.

14. Damage resulting from the handling, shipping or transportation of the Product.

15. Any additional warranties and/or promises offered by a third party. No unauthorized person, fabricator, installer, agent or employee of EasyTurf is entitled to assume any liability on behalf of EasyTurf relating to the sale of the Product or has the authority to increase or alter the obligations or limitations of this Warranty.

The following conditions are not a manufacturing defect and not covered by this Warranty: soiling or staining, water marks, mold, mildew, fuzzing, shedding or damage due to excessive brushing. All synthetic turf is subject to normal wear and tear, which is not a manufacturing defect and is not covered by this Warranty. In addition to the other factors listed in this Warranty, wear and tear depends on, without limitation, the construction of synthetic turf (fiber face weight, stitch rate, fiber pile height and gauge, and maintenance of the field) and the intensity of use of the synthetic turf. The Product will retain at least fifty percent (50%) of it pile weight during the Warranty period and will be stable to light fading with the maximum fading of the Product during the Warranty period not to exceed fifteen percent (15%) of color loss annually based upon an acceptable grey scale. This Warranty does not cover slight variations or gradations of color within the Product and/or face distortion.

EasyTurf disclaims all liability for incidental and consequential damages for breach of any express or implied warranty, including any implied warranty of merchantability, with respect to the Product. In the event that the Product is used for purposes other than approved sporting activities or any other uses for which EasyTurf gives its written authorization, it being understood that EasyTurf has tested the Product for use in connection with these sporting activities and may not have tested it for other uses, EasyTurf shall not be responsible for any and all damages incurred and the Manufacturer's Limited Warranty, as well as all legal warranties, shall become null and void. Any Product repairs or replacements performed under the terms of this Warranty shall not extend the term of this Warranty.

EasyTurf will not be responsible for any costs and/or expenses incurred by the Purchaser and/or others due to testing, consultation or inspection of the Product.

The Purchaser must promptly inspect the Product upon delivery of the Product. The Purchaser must notify EasyTurf in writing of any defect in the Product prior to installation of the Product, in which case the installation shall immediately be stopped until EasyTurf has the opportunity to review the claim of defect. In the event of a latent defect after installation of the Product, the Purchaser must notify EasyTurf in writing as soon as practicable of any such defect, but not later than thirty (30) days within the date on which Purchaser knows or should have known of the defect.

Brock PowerBase YSR
Limited Product and Performance Warranty

1. Limited Warranties. Subject to the terms and conditions of this Limited Warranty, Brock International LLC ("Brock") warrants to the owner of the playing field(s) ("Owner") at which Brock PowerBase YSR panels ("Panels") have been installed that, for a period of twenty five (25) years from date of purchase (the "Warranty Period"), the Panels shall: (1) be comprised of an expanded polypropylene composite material with a minimum 43 grams per liter density; (2) be free from defects in materials and workmanship; (3) not materially degrade under normal use as an underlayment for artificial turf sports surfaces; and (4) be part of a turf system that will not exceed a field average GMax of 120 G's (the "GMax Warranty") as tested according to the ASTM 1936 Protocol using the F-335-A Missile with test conditions above 40° F with field free of any frost or contaminants, provided the original turf initially installed over the Panels has never been replaced (collectively, the "Limited Warranties").

2. Warranty Claim Process. In the event the Panels fail to comply with these Limited Warranties during the Warranty Period, Owner shall: (1) provide Brock written notice within thirty (30) days after it first discovery of the non-compliance; and (2) afford Brock an opportunity to inspect the Panels (in place as originally installed) prior to modifying or altering the Panels in any manner.

3. Exclusions. Notwithstanding any provision herein to the contrary, Brock does not warrant and shall not be responsible for, the Limited Warranties shall not cover, and Owner shall not be entitled to recover, (for breach of contract, tort, strict liability, or otherwise), any loss, liability, claim, damage, cost, expense, or defect (collectively, a "Claim") caused by, in whole or in part, or arising from any of the following: (1) any party's failure to install, use, and maintain the Panels strictly in accordance with Brock's Installation Standards and Manufacturer's Standards. (2) improper handling, use or protection of Panels, including, but not limited to, imposition of excessive static loads (in excess of 35 PSI for a period greater than 30 minutes) or dynamic loads (impact in excess of 106 PSI) or breaking or improper cutting of Panels; (3) improper or inadequate site preparation, including, without limitation, improper base material, grading, compaction, or material usage in perimeter drain collectors and other drain collectors; (4) improper or inadequate site drainage, including without limitation, lack of adequate drainage systems, gutters, channels, and water diversion mechanisms; (5) any permanent depression of the surface of the Panels which is less than 6 mm in depth; (6) any cause or event that is not reasonably foreseeable by Brock, including acts of God, extreme weather events, fires, floods, lightning, earthquakes, landslides, explosions, riots, wars, hurricane, sabotage, terrorism, vandalism, accident, restraint of government, governmental acts, and injunctions; (7) any condition related to the soil, base, earth, or subsurface upon which the Panels are installed, including without limitation, soil expansion, shifting, contraction, subsidence, compression, or erosion; (8) improper or inadequate selection, use, installation, maintenance, repair, or replacement of the field's artificial turf system, including any infill; (9) cumulative exposure of the Panels to sunlight or other source of Ultraviolet light for more than ten (10) calendar days; (10) contamination of the infill with sand, dirt, or other substances; (11) failure to install the Panels with a minimum depth of 25 mm of an infill that includes a minimum 25 percent by weight of resilient content; and (12) as to the GMax Warranty, any Claim occurring after the original turf that was initially installed over the Panels has been replaced (collectively, the "Exclusions").

4. Remedy. As Owner's sole and exclusive remedy for any Claim relating to or arising from the Limited Warranties or Panels, and provided the Claim was not caused by or arising from any Exclusion, Brock shall deliver to the Owner and install new Panels to replace the non-conforming Panels. The installation shall include the temporary removal and repair or replacement of the artificial turf and infill over the affected area. Brock shall have discretion as to whether to repair or make replacement of the artificial turf and infill. If Owner decides to replace the entire surface for reasons other than a breach of Brock Warranty, Owner shall give Brock reasonable advance notice of replacement of the surface so that a Brock representative can be present as the time of the turf replacement to inspect Brock panels.

5. Limitation of Liability. OWNER'S SOLE AND EXCLUSIVE REMEDY FOR ANY AND ALL CLAIMS ARISING OUT OF OR RELATING TO THE PURCHASE, USE, OR CONDITION OF ANY PANELS OR THIS LIMITED WARRANTY UNDER ANY LEGAL THEORY, INCLUDING WITHOUT LIMITATION, BREACH OF WARRANTY, BREACH OF CONTRACT, NEGLIGENCE (INCLUDING NEGLIGENT MISREPRESENTATION), OR STRICT LIABILITY, SHALL BE LIMITED TO THE REMEDIES PROVIDED IN SECTION 4 (REMEDY) OF THIS LIMITED WARRANTY. IN NO EVENT SHALL BROCK BE LIABLE FOR, AND OWNER HEREBY WAIVES ANY RIGHT TO RECOVER, ANY PUNITIVE, SPECIAL, CONSEQUENTIAL, OR INDIRECT LOSSES OR DAMAGES, ALL OF WHICH OWNER EXPRESSLY DISCLAIMS. BROCK'S TOTAL AGGREGATE LIABILTY TO OWNER FOR ANY AND ALL CLAIMS UNDER ANY LEGAL THEORY ARISING FROM OR RELATING TO THE PANELS, ANY ACTION OR INACTION OF BROCK, OR THIS LIMITED WARRANTY, SHALL NOT EXCEED THE TOTAL CONSIDERATION OWNER PAID FOR THE NON-CONFORMING PANELS. The foregoing Limitation of Liability shall not apply to any Claim caused by the grossly negligent or intentional acts or omissions of Brock. Owner and Brock (the "Parties") agree that: (1) this Limitation of Liability was the product of commercial negotiation, formed part of the basis of the sale contract for the Panels, factored into the pricing of the panels, and that Owner had an opportunity to review the same with its legal counsel; (2) in the event the Sole and Exclusive Remedy Fails of its essential purpose, they intend for the above disclaimer of punitive, special, consequential, and indirect losses or damages (the "Disclaimer") to survive and remain binding upon the Parties; and (3) the Disclaimer is independent of any other limitation of liability in this Limited Warranty and reflects a separate allocation of risk.

6. Disclaimer of Warranties. THIS LIMITED WARRANTY AND ITS REMEDIES ARE EXCLUSIVE AND IN LIEU OF ALL OTHER WARRANTIES, REMEDIES AND CONDITIONS, WHETHER ORAL, WRITTEN, STATUTORY, EXPRESS OR IMPLIED. BROCK DISCLAIMS ALL STATUTORY AND IMPLIED WARRANTIES, INCLUDING WITHOUT LIMITATION, WARRANTIES OF MERCHANTABILITY AND FITNESS FOR A PARTICULAR PURPOSE AND WARRANTIES AGAINST HIDDEN OR LATENT DEFECTS.

7. General Terms. This Limited Warranty: (1) shall be governed, interpreted, and enforced solely under laws of the State of Colorado, irrespective of conflict of laws principles; (2) shall not be waived, altered, or modified except in a writing signed by the Parties; (3) supersedes and replaces entirely any previous representations, warranties, or promises made in relation to the Panels; and (4) may only be assigned by Brock in its sole discretion. Failure to enforce any provision of this Limited Warranty shall not constitute a waiver of any other provision.

WARRANTY

EASYTURF
A FieldTurf Company

COMMERCIAL MANUFACTURER

LIMITED WARRANTY

EASYTURF AUTHORIZED DEALER

With an enduring reputation for innovation and quality in manufacturing, EasyTurf is proud to extend to you its 8 year limited warranty on its landscape products and its 7 year limited warranty on golf, bocce ball and auxiliary sport products.

EASYTURF PRODUCTS ARE WARRANTIED AGAINST:

1. **Manufacturing Defects.** At the time of original purchase, the product will be free of any defects. Artificial grass products are subject to normal wear and tear. Normal wear and tear is not a manufacturer's defect and is not covered by this limited warranty.

2. **Pile Retention.** Product will retain at least 50% of its pile fiber under the following conditions:
   a. When properly installed to manufacturers acceptable standards, for normal use by a reputable contractor; and
   b. When product is properly maintained according to all manufacturer's care and maintenance guidelines.

BEST COMMERCIAL WARRANTY
8
8 YEAR NON-PRORATED
IN THE INDUSTRY

GOLF • BOCCE BALL
7 YEAR WARRANTY
AUXILIARY SPORTS

REFERENCE #			
PROJECT NAME	INSTALLED BY		
PROJECT ADDRESS	CITY	ST	ZIP
PHONE	EMAIL	DATE OF COMPLETION	

See page 2 for complete warranty details.

WARRANTY DETAILS

EasyTurf,, Inc. ("EasyTurf") provides the original purchaser ("Purchaser") of EasyTurf Artificial Grass products ("Product") with a Limited Warranty ("Warranty") as set forth herein.

This Warranty shall be in force and remain in effect for a period of eight (8) years from the date of substantial completion of the installation of the Product ("Effective Date").

Warranty applicable to Putting Greens, Bocce Ball and Auxiliary Sports: this Warranty shall be in force and remain in effect for a period of seven (7) years from the Effective Date.

For the purposes of this Warranty, Auxiliary Sports shall mean all sports which are not soccer, football, rugby, lacrosse, baseball, softball or field hockey.

WARRANTY

1. Manufacturing Defects. At the time of original purchase, the product will be free of any defects. Artificial grass products are subject to normal wear and tear. Normal wear and tear is not a manufacturer's defect and is not covered by this limited warranty.
2. Pile Retention. Product will retain at least 50% of its pile fiber under the following conditions:
   a. When properly installed to manufacturers acceptable standards, for normal use by an EasyTurf Authorized Dealer; and
   b. When Product is properly maintained according to all manufacturer's care and maintenance guidelines.

WARRANTY REMEDY LIMITED TO REPLACEMENT PRODUCT

EasyTurf will, at its discretion, repair or replace only the affected area of the Product during the period of this Warranty, subject to specific terms and conditions contained herein. This Warranty excludes all cost associated with removal of the defective Product and installation of the replacement Product. No cash rebates will be made. This Warranty covers first quality Products only, and is not applicable to Products sold as seconds or irregulars. All Warranty claims must be submitted to EasyTurf as set forth in the "Claims Procedure" section herein.

In the event that the Product in question is discontinued, EasyTurf will replace the defective Product with a comparable Product of equal value. This Warranty covers the original purchaser and is not transferrable. The Warranty Period for the replacement Product shall be limited to the Warranty Period for the initial Product.

Product replaced under this Warranty will not extend the warranty period.

WARRANTY LIMITATIONS AND EXCLUSIONS

This Manufacturer's Limited Warranty does not cover:

1. Any costs related to the removal of the defective material, site preparation and installation procedures.
2. The installation of the Product and/or the labor/workmanship associated with the installation of the Product.
3. Damage as the result of an accident, misuse, intentional or unintentional abuse, infill displacement, neglect, or anything beyond normal use of the Product.
4. Damage as the result of repetitive activities, such as landing zones, slide areas and other high friction activity areas.
5. Damage due to improper installation, negligence, water intrusion, flooding, abrasion, impact, cutting, freight damage, alteration, or any wear or damage caused by Acts of God.
6. Damage as the result of a failure of the purchaser/owner to maintain the Product in accordance with manufacturer's guidelines.
7. Damage that is the result of attempted repairs or replacement or general maintenance that is not performed by an authorized EasyTurf dealer.
8. Damage caused by the application of cleaning agents or chemicals, adhesives, animals, or general negligence.
9. Damage that is the result of shrinking or melting of fibers due to reflection, sun magnification or other sources of extreme heat.
10. Variations in appearance caused by light refraction including the appearance of faint lines and/or matting.
11. Variations in color. The purchaser understands that, as with any manufactured product, different dye lots create slight variations in shading and color. Any such variations in color are not covered under this limited warranty.
12. Failure of the subsurface whether through improper preparation or poor design.
13. The compaction rate or integrity of the subsurface upon which the Product is placed. Any damage caused to the Product by the subsurface or conditions are not covered by this Warranty.
14. Damage cause by the use of spiked shoes, steel cleats, or other similar footwear for which the Product was not intended.

NO EXPRESSED OR IMPLIED WARRANTIES

No third party warranties, expressed or implied, are covered under this Warranty. No individual, whether an installer, employee of EasyTurf or EasyTurf, agent, fabricator, or other may authorize liability on behalf of EasyTurf. EasyTurf Artificial Grass is designed to withstand certain normal 'wear and tear' and as such, this is not considered a manufacturer's defect. Any product upon which walking, running and playing is to take place, normal wear and tear, including matting, should be expected.

LIMITATIONS ON LIABILITY

EasyTurf's liability under this Warranty is limited to the value of the material in question. IN NO EVENT SHALL EASYTURF BE LIABLE FOR LOST PROFITS OR REVENUES, LOSS OF USE OR SIMILAR ECONOMIC LOSS, OR INDIRECT SPECIAL, INCIDENTAL, CONSEQUENTIAL, PUNITIVE OR SIMILAR DAMAGES ARISING OUT OF OR IN CONNECTION WITH SUCH CLAUSE.

PURCHASER'S OBLIGATION TO INSPECT UPON DELIVERY

Purchaser must promptly inspect all Products upon delivery and notify EasyTurf in writing of any defects, shortages or non-conformities within 30 days of the date of delivery ("Delivery Date"). Notwithstanding anything herein to the contrary, if Purchaser fails to promptly inspect and identify any Product defects, shortages or non-conformities, Purchaser shall be deemed to have accepted the Products "as is" and EasyTurf shall have no obligations and/or liability with respect to such defects and shortages.

ASSIGNMENT

Purchaser may not transfer, convey or otherwise assign any or all of its rights under this Warranty without prior written consent of EasyTurf. Any such transfer or assignment without prior written consent shall be null and void and of no force or effect.

MODIFICATION

THIS WARRANTY CONSTITUTES THE FINAL AND EXCLUSIVE TERMS FOR THE SALE OF PRODUCTS AND MAY NOT BE MODIFIED, ABSENT THE EXPRESS WRITTEN CONSENT FROM EASYTURF.

CLAIMS PROCEDURE

All warranty claims must be made in writing, within thirty (30) days of discovering the alleged defect, shortage or non-conformity giving rise to the claim. Include proof of purchase from an EasyTurf authorized agent with the warranty claim. In the event that the Purchaser fails to notify EasyTurf within thirty (30) days, EasyTurf has the right to deny any and all claims on this Warranty.

All warranty claims should be made in writing to your Authorized EasyTurf Dealer.

GOVERNING LAW

This Warranty and its terms and conditions shall be exclusively governed by and construed in accordance with the laws of the State of Georgia without regards to its conflicts of law provisions.

BEYNON®

A Tarkett Sports Company

5-YEAR WARRANTY

SAMPLE

INSTALLED AT

(TYPE IN LOCATION)

16 Alt Road - Hunt Valley, Maryland 21030 | 410-771-9473 | FAX: 410-771-9479

WARRANTOR: Beynon Sports Surfaces, Inc. ("BSS")

16 Alt Road - Hunt Valley, Maryland 21030

OWNER: ("Owner")

PROJECT: BSS(TYPE PRODUCT) Track Surface (the "Surface(s)")
Installed at

WARRANTY: BSS warrants to Owner, subject to the terms and conditions contained in this Warranty, that the above-described Surface is free from defects in materials and workmanship under normal use and service, and that the Surface was installed in accordance with the drawings, plans and specifications for the Surface.

WARRANTY PERIOD: This Warranty shall be in force for a period of five years from the Effective Date as defined below.

RESPONSE FOR WARRANTY REPAIRS: BSS agrees to perform all repairs required by this Warranty within a reasonable time upon receiving proper written notice from Owner as provided below and after BSS carries out all inspections and tests which it may deem necessary or advisable.

LIMITATIONS AND EXCLUSIONS: This Warranty does not apply to any defect, failure, damage, or undue wear in or to the Surface caused by or connected with: (a) improper or insufficient design or engineering, or improper or insufficient project drawings, plans or specifications which were not provided by BSS; (b) an inadequate or defective pre-existing base or surface under the Surface covered by this Warranty, including but not limited to separations of concrete slab(s) or deterioration of asphalt not installed by BSS ; (c) the inherent characteristics of the surface or other supporting materials upon which the Surface is installed; (d) misuse, abuse, or deliberate acts of vandalism; (e) accident, negligence, or acts of God; (f) excessive static or dynamic loads; (g) use of improper cleaning methods; (h) moisture accumulation under the Surface after installation which may cause: 1) bubbles under the Surface, 2) adhesion problems or failures, or 3) other problems or failures not related to defects in materials; or (i) Owner's failure to care for and maintain the Surface in accordance with BSS's written instructions.

This Warranty does not cover any staining, discolorations, or other damage caused by excessive moisture from such things as flooding, plumbing and appliance leaks, or other water leakage. BSS does not warrant or guarantee the accuracy or sufficiency of any drawings, plans or specifications not prepared by BSS and which were used in connection with installing the Surface. This Warranty shall not apply to the Surface, or any part thereof, which has been repaired or altered without BSS's prior written consent. No allowance or credit will be granted for any repairs or alterations to the Surface made by Owner except as authorized by this Warranty.

THIS WARRANTY IS EXPRESSLY IN LIEU OF ALL OTHER WARRANTIES, EXPRESS, IMPLIED OR ARISING BY OPERATION OF LAW, INCLUDING (BUT NOT LIMITED TO) ANY IMPLIED WARRANTIES OF

SAMPLE

MERCHANTABILITY OR FITNESS FOR A PARTICULAR PURPOSE AND OF ALL OTHER OBLIGATIONS OR LIABILITIES ON BSS'S PART. BSS SHALL NOT BE LIABLE FOR ANY INCIDENTAL, CONSEQUENTIAL, SPECIAL OR INDIRECT DAMAGES UNDER THIS WARRANTY, INCLUDING BUT NOT LIMITED TO ANY ACTIONS ALLEGING DAMAGES UNDER TORT, CONTRACT OR STRICT LIABILITY. THIS WARRANTY SHALL BE VOID IF CONTRACTOR HAS NOT BEEN PAID IN FULL FOR ITS WORK.

BSS'S SOLE OBLIGATION UNDER THIS WARRANTY IS TO REPAIR OR REPLACE AT ITS SOLE DISCRETION ALL OR ANY PORTION OF THE SURFACE WHICH MAY BE DETERMINED TO BE DEFECTIVE. BSS'S LIABILITY FOR ANY SUCH REPAIR OR REPLACEMENT SHALL IN NO EVENT EXCEED THE AMOUNT OF THE PURCHASE PRICE ATTRIBUTABLE TO THE DEFECTIVE PORTION OF THE SURFACE WHICH IS REPAIRED OR REPLACED.

BSS neither assumes nor authorizes any person to assume for it any other liability in connection with the sale, installation or use of the Surface. This Warranty shall not be construed to be an obligation of any performance or other bond furnished by any party in connection with BSS's contract for the Surface and shall not be enforceable against any such party. Labor and materials needed for any repair work not covered by this Warranty will be billed to Owner at BSS's regular hourly rates and materials charges.

WARRANTY DISCLAIMER ON PRE-EXISTING BASE AND UNDERLYING SURFACE COATING: All pre-existing base and surface coating (if any) upon which the new BSS Surface has been installed is specifically excluded from any coverage under this Warranty. BSS's previous acceptance of any such pre-existing base or surface coating for installation of the Surface shall not be deemed to constitute a warranty or other guaranty thereof. Depressions in any pre-existing base or surface coating have been patched by BSS only as specified in the written plans and specifications for the Surface. Owner further acknowledges and agrees that any damage caused to the Surface by (a) any pre-existing base or surface coating and (b) any cracks which are now in or which may develop hereafter in the pre-existing base or surface coating are specifically excluded from any coverage under this Warranty.

MAINTENANCE INSTRUCTIONS: BSS has supplied Owner with a copy of the written Maintenance Instructions containing directions for the care and maintenance of the Surface. Owner acknowledges receipt of said Instructions and agrees to comply with and carry out the directions contained in it as a condition of this Warranty. The terms of the Instructions are incorporated in this Warranty by reference.

CLAIMS: All claims by Owner under this Warranty must be made in writing to the following address within thirty calendar days after Owner learns of any defect giving rise to the claim: Contract Administrator, Beynon Sports Surfaces, Inc., 16 Alt Road, Hunt Valley, MD 21030.

INSPECTION AND TESTS: BSS shall be allowed to inspect the Surface during reasonable business hours regarding any claim which Owner makes under this Warranty; to be present at and to analyze the results of all tests conducted by Owner or others; and to conduct such tests as BSS in its discretion may deem advisable. Owner shall promptly furnish BSS with a copy of all written reports of any tests performed by Owner or on Owner's behalf. BSS shall not be responsible for any costs or expenses incurred by Owner or others with respect to such tests, except that BSS shall pay for the costs of all tests and analyses conducted or directed by BSS's representatives.

SAMPLE

EFFECTIVE DATE: The Effective Date of this Warranty is

GOVERNING LAW: This Warranty shall be governed by and interpreted in accordance with the laws of the State of Maryland.

SAMPLE

("Owner")

Beynon Sports Surfaces, Inc.
16 Alt Rd
Hunt Valley, MD 21030

By: _____

By: _____
Drew Beynon

Title: _____

Title: Chief Operating Officer

Date: _____

Date: _____

ClassicCourt
By Tarkett Sports

50-YEAR WARRANTY

THIRD-PARTY INSURED

50-year structural warranty.
Includes a revolving, self-renewing 10-year term.
Refer to the full warranty for details.

MANUFACTURER'S LIMITED WARRANTY

WARRANTOR: FieldTurf, USA Inc.
175 N Industrial Boulevard NE
Calhoun, Georgia 30701
USA

OWNER: **("Insert Owner's Name and Address")**

SURFACE: **OMNISPORTS 7.1mm (" S u r f a c e ")**

WARRANTY DESCRIPTION AND WARRANTY PERIODS:

LIMITED PRODUCT DEFECT WARRANTY: FieldTurf USA, Inc. ("FieldTurf") warrants to Owner, subject to all terms and conditions contained in this Warranty, that the above-described Surface is free from defects in materials and workmanship under normal use and service, as long as the Surface was installed in accordance with the Installation Systems section of this Warranty, FieldTurf installation guidelines, and drawings, plans and specifications for the Surface. The Limited Product Defect Warranty shall be in force for a period of fifteen (15) years from the Effective Date as defined below.

LIMITED WEAR WARRANTY: FieldTurf warrants to Owner, subject to all terms and conditions contained in this Warranty, that there will be no wear-through of the Surface's wear layer under normal use and service, as long as the Surface was installed in accordance with the Installation Systems section of this Warranty, FieldTurf installation guidelines, and drawings, plans and specifications for the Surface. For purposes of the Limited Wear Warranty, "wear-through" refers to the top layer of the Surface and means a complete loss of the wear-layer so that the printed layer (pattern or color) is materially changed or affected. The Limited Wear Warranty only shall be in force for a period of fifteen (15) years from the Effective Date.

LIMITED MOISTURE WARRANTY: FieldTurf warrants to Owner, subject to the terms and conditions contained in this Warranty, that the above-described Surface shall free from defects caused by subfloor moisture, as long as the Surface was installed in accordance with the Installation Systems section of this Warranty, FieldTurf installation guidelines, and the building or structure in which the Surface is installed maintains a relative humidity ("RH") level (according to ASTM F2170) as provided in the Installation Systems section of this Warranty, at all times during the Warranty period. This Limited Moisture Warranty shall be in force for a period of ten (10) years from the Effective Date as defined below.

RESPONSE FOR WARRANTY REPAIRS: FieldTurf agrees to perform all repairs required by this Warranty within a reasonable time upon receiving proper written notice from Owner as provided below and after FieldTurf carries out all inspections and tests, which it may deem necessary or advisable. Any required repair work shall be initiated by FieldTurf within a reasonable time after FieldTurf's receipt of Owner's written notice requesting such repairs. FieldTurf's sole liability under this Warranty shall be limited to either repair or replacement of the affected area of the Surface, at its sole discretion, and FieldTurf shall have no other obligations or liabilities with respect to defects of the Surface.

LIMITATIONS AND EXCLUSIONS: This Warranty does not apply to any defect, failure, damage, and/or accelerated, undue or excessive wear in or to the Surface caused by or connected with: (a) the installation process of the Surface on the Owner's subfloor surface; (b) improper or insufficient design or engineering, or improper or insufficient project drawings, plans or specifications; (c) an inadequate

SAMPLE

or defective pre-existing subfloor or surface; (d) the inherent characteristics of the earth and/or surface upon which the Surface is installed; (e) misuse, abuse, or deliberate acts of vandalism; (f) accident, negligence, or acts of God; (g) static or dynamic loads exceeding FieldTurf''s recommendations; (h) use of improper cleaning methods; (i) the introduction or accumulation of moisture around or under the Surface beyond the tolerances permitted by FieldTurf's installation guidelines; (j) high moisture and/or other adverse conditions; (k) Owner's failure to care for and maintain the Surface in accordance with FieldTurf's Maintenance Manual and other written instructions; (l) use which is not generally accepted as a typical use of the Surface; (m) improper installation; (n) improper protection from excessive loads; and/or (o) floods and/or other events introducing water to the Surface.

Furthermore, this Warranty ***does not cover nor will be FieldTurf be liable for*** (1) damages due to personal injury; (2) change of the Surface appearance due to excessive ultraviolet (UV) exposure and/or or heat; (3) damage due to unpredictable and/or unknown causes;(4) damage and/or performance reductions due to improper control of atmospheric soiling and/or contamination; (5) stains and/or discoloration of the Surface; and (6) costs associated with the temporary and/or permanent closing of the facility in which the Surface was installed. FieldTurf does not warrant or guarantee the accuracy or sufficiency of any drawings, plans, or specifications not prepared by FieldTurf and which are used in connection with installing the Surface. This Warranty shall be of no force and effect if FieldTurf is not paid in full for the Surface and FieldTurf's obligations under this Warranty are expressly contingent upon FieldTurf being paid in full for the Surface.

This Warranty shall not apply to the Surface, or any part thereof, which has been repaired or altered without FieldTurf's prior written consent. No allowance or credit will be granted for any repairs or alterations to the Surface made by Owner except as authorized by this Warranty.

THIS WARRANTY IS EXPRESSLY IN LIEU OF ALL OTHER WARRANTIES, EXPRESSED, IMPLIED OR ARISING BY OPERATION OF LAW, INCLUDING (BUT NOT LIMITED TO) ANY IMPLIED WARRANTIES OF MERCHANTABILITY OR FITNESS FOR A PARTICULAR PURPOSE AND OF ALL OTHER OBLIGATIONS OR LIABILITIES ON FIELDTURF'S PART. FIELDTURF USA, INC. SHALL NOT BE LIABLE FOR ANY DAMAGES UNDER TORT, CONTRACT OR STRICT LIABILITY AND/ OR INCIDENTAL, CONSEQUENTIAL, SPECIAL OR INDIRECT DAMAGES UNDER THIS WARRANTY.

FIELDTURF'S SOLE OBLIGATION UNDER THIS WARRANTY IS TO REPAIR OR REPLACE AT ITS SOLE DISCRETION ALL OR ANY PORTION OF THE SURFACE WHICH MAY BE DETERMINED TO BE DEFECTIVE. FIELDTURF'S LIABILITY FOR ANY SUCH REPAIR OR REPALCEMENT SHALL IN NO EVENT EXCEED THE AMOUNT OF THE PURCHASE PRICE ATTRIBUTABLE TO THE DEFECTIVE PORTION OF THE SURFACE WHICH IS REPAIRED OR REPLACED.

MAINTENANCE INSTRUCTIONS: FieldTurf has made available or supplied Owner with a copy of the Maintenance Manual containing written instructions for the care and maintenance of the Surface. Owner acknowledges receipt of said Maintenance Manual and agrees to comply with and carry out the instructions contained in it as a condition of this Warranty. The terms of the Maintenance Manual are incorporated in this Warranty by reference. If a Maintenance Manual is not received by Owner at the time of issuance of this warranty, it is the owner's obligation to request and maintain record of receipt.

CLAIMS: All claims by Owner under this Warranty must be made in writing to the following address within thirty calendar days after Owner learns of any defect giving rise to the claim: FieldTurf USA, Inc. Indoor Division, 175 N Industrial Blvd. Calhoun, Georgia, 30701.

INSPECTIONS AND TESTS: FieldTurf shall be allowed to inspect the Surface during reasonable business hours regarding any claim, which Owner makes under this Warranty; to be present at and to analyze the results of all tests conducted by Owner or others; and to conduct such tests as FieldTurf in

SAMPLE

its discretion may deem advisable. Owner shall promptly furnish FieldTurf with a copy of all written reports of any tests performed by Owner or on Owner's behalf. FieldTurf shall not be responsible for any costs or expenses incurred by Owner or others with respect to such tests, except that FieldTurf shall pay for the costs of all tests and analyses conducted or directed by FieldTurf representatives.

INSTALLATION SYSTEMS: FieldTurf provides specific installation systems to accommodate a variety of building conditions. It is critical that care is taken by both the owner and the contractor (and other interested parties) performing the work to understand the benefits and limitations of each system and select the appropriate system. All concrete slabs should be carefully inspected for typical, predictable and acceptable conditions, especially as it concerns moisture testing. Existing buildings and structures that are remodeled may not contain effective vapor retarders/barriers, exhibit poor drainage and/or other conditions that allow the introduction of moisture. All FieldTurf installation systems are based on typical, predictable and acceptable concrete conditions. For fully adhered systems and GreenLay products, concrete must maintain conditions consistent with FieldTurf's written tolerances, as outlined in FieldTurf's installation guidelines. FieldTurf does not warrant against the loss of bond or all other adverse effects upon any installation system where conditions exceed FieldTurf's written tolerances; this includes, but is not limited to, the presence and/or accumulation of standing water on the surface of the concrete slab or over other installation systems, including moisture mitigation products that FieldTurf does not provide. In the event of a claim hereunder, FieldTurf reserves the right to perform its own inspections during normal business hours, in its sole discretion, to determine the validity of the claim. FieldTurf does not warrant against the effect of high moisture conditions and/or other adverse conditions existing within any and all building materials, components, elements and conditions.

All FieldTurf installation systems require the ability to bond directly to concrete or approved alternative subfloor surface. Sealers, existing adhesives and/or any other contaminants may affect the performance of any FieldTurf installation system. Strict adherence to ASTM F710 is required. The use of solvents to remove existing adhesives is prohibited. FieldTurf does not warrant against any damage caused by the existence and/or application of moisture mitigation systems without FieldTurf's express written approval and consent. FieldTurf expressly excludes from this Warranty the movement of joints and the development of cracks, divots, scratches and gouges in the subfloor surface.

The bridging of moving joints is expressly prohibited with the exception of FieldTurf installation systems incorporating Tarkolay products provided those joints are properly prepared.

Projects must be registered using FieldTurf's specific warranty registration form within thirty (30) days of substantial completion of the installation of the Surface. A sample warranty may be provided upon request, but the Warranty will not be issued by FieldTurf without timely submittal of FieldTurf's warranty registration form; all FieldTurf registration forms must include evidence of moisture testing and written evidence of inspections, both of which must be acceptable to FieldTurf, along with the FieldTurf installation system type used. FieldTurf does not validate moisture testing information and does not interpret such testing, but is collected for data and reference purposes. FieldTurf does not interpret existing conditions. PH testing is required and must also meet and remain within FieldTurf's written tolerances.

Installation Systems Moisture Tolerances Applicable to this Warranty:

1.) Full spread with Multi-Set Acrylic Adhesive with a moisture tolerance of eighty-three percent (83%) RH per ASTM F2170.
2.) Full spread with HS Sport Spray Adhesive with a moisture tolerance of ninety percent (90%) RH per ASTM F2170.
3.) GreenLay with TarkoTape and Multi-Poxy with a moisture tolerance of ninety-two percent (92%) RH per ASTM F2170.
4.) Full spread with Multi-Poxy with a moisture tolerance of ninety-eight percent (98%) RH per ASTM F2170.

SAMPLE

5.) Tarkolay with Multi-Poxy which does not require moisture testing and is the only system recommended to bridge properly prepared moving joints or minor cracks.

GOVERNING LAW AND CONSENT: This Warranty shall be governed by and interpreted in accordance with the law of the State of Georgia.

EFFECTIVE DATE: The Effective Date of this Warranty is the _____day of _____, 2016.

OWNER'S NAME

By:_____

Title:_____

Date:_____

FieldTurf USA, Inc.

By:_____

Title:_____

Date:_____

SAMPLE

For more information please contact the Indoor division of FieldTurf at 888-364-6541.

MANUFACTURER'S LIMITED WARRANTY

WARRANTOR: FieldTurf USA, Inc.
175 N Industrial Boulevard NE
Calhoun, Georgia 30701
USA

OWNER: **("Insert Owner's Name and Address")**

SURFACE: **Polyturf Plus Pad and Pour**
("Surface")

WARRANTY DESCRIPTION AND WARRANTY PERIODS:

LIMITED PRODUCT DEFECT WARRANTY: FieldTurf USA, Inc. ("FieldTurf") warrants to Owner, subject to all terms and conditions contained in this Warranty, that the above-described Surface is free from defects in materials and workmanship under normal use and service, as long as the Surface was installed in accordance with the Installation Systems section of this Warranty, FieldTurf installation guidelines, and drawings, plans and specifications for the Surface. The Limited Product Defect Warranty shall be in force for a period of thirty~~fifteen~~ (30) years from the Effective Date as defined below. For purposes of ~~t~~This W~~w~~arranty, the following occurrences ~~covers the following~~ may be defects and included in the coverage of this Warranty, subject to all terms and conditions of the Warranty:~~circumstances:~~

1) Manufacturing defects;
2) Delamination of the Surface layers;
3) Deterioration of the recycled rubber base mat layer;
4) Reversion or re-liquefying of the urethane layers; or
5) Separation of the seams within the base mat layer.

LIMITED MOISTURE WARRANTY: FieldTurf warrants to Owner, subject to the terms and conditions contained in this Warranty, that the above-described Surface shall free from defects caused by subfloor moisture, as long as the Surface was installed in accordance with the Installation Systems section of this Warranty, FieldTurf installation guidelines, and the building or structure in which the Surface is installed maintains a relative humidity ("RH") level (according to ASTM F2170) as provided in the Installation Systems section of this Warranty, at all times during the Warranty period. This Limited Moisture Warranty shall be in force for a period of ten (10) years from the Effective Date as defined below.

RESPONSE FOR WARRANTY REPAIRS: FieldTurf agrees to perform all repairs required by this Warranty within a reasonable time upon receiving proper written notice from Owner as provided below and after FieldTurf carries out all inspections and tests, which it may deem necessary or advisable. Any required repair work shall be initiated by FieldTurf within a reasonable time after FieldTurf's receipt of Owner's written notice requesting such repairs. FieldTurf's sole liability under this Warranty shall be limited to either repair or replacement of the affected area of the Surface, at its sole discretion, and FieldTurf shall have no other obligations or liabilities with respect to defects of the Surface.

LIMITATIONS AND EXCLUSIONS: This Warranty does not apply to any defect, failure, damage, and/or accelerated, undue or excessive wear in or to the Surface caused by or connected with: (a) the

For more information please contact the Indoor division of FieldTurf at (888) 364-6541.

Formatted: Not Highlight
Formatted: Not Highlight
Formatted: Font: Not Italic, Not Highlight
Formatted: Numbered + Level: 1 + Numbering Style: 1, 2, 3, … + Start at: 1 + Alignment: Left + Aligned at: 0.75" + Indent at: 1"
Formatted: Not Highlight
Formatted: Font: 9 pt, Not Italic, Not Highlight
Formatted: Font: Not Italic, Not Highlight
Formatted: Not Highlight
Formatted: Font: Not Italic, Not Highlight
Formatted: Not Highlight
Formatted: Font: Not Italic, Not Highlight
Formatted: Not Highlight
Formatted: Font: Not Italic, Not Highlight
Formatted: Numbered + Level: 1 + Numbering Style: 1, 2, 3, … + Start at: 1 + Alignment: Left + Aligned at: 0.75" + Indent at: 1", Don't adjust space between Latin and Asian text, Don't adjust space between Asian text and numbers
Formatted: Not Highlight
Formatted: Font: Not Italic, Not Highlight
Formatted: Not Highlight
Formatted: Font: Not Italic, Not Highlight
Formatted: Numbered + Level: 1 + Numbering Style: 1, 2, 3, … + Start at: 1 + Alignment: Left + Aligned at: 0.75" + Indent at: 1"
Formatted: Numbered + Level: 1 + Numbering Style: 1, 2, 3, … + Start at: 1 + Alignment: Left + Aligned at: 0.75" + Indent at: 1", Don't adjust space between Latin and Asian text, Don't adjust space between Asian text and numbers
Formatted: Font: Not Italic

Sample

installation process of the Surface on the Owner's subfloor surface; (b) improper or insufficient design or engineering, or improper or insufficient project drawings, plans or specifications; (c) an inadequate or defective pre-existing subfloor or surface; (d) the inherent characteristics of the earth and/or surface upon which the Surface is installed; (e) misuse, abuse, or deliberate acts of vandalism; (f) accident, negligence, or acts of God; (g) static or dynamic loads exceeding FieldTurf''s recommendations; (h) use of improper cleaning methods; (i) the introduction or accumulation of moisture around or under the Surface beyond the tolerances permitted by FieldTurf's installation guidelines; (j) high moisture and/or other adverse conditions; (k) Owner's failure to care for and maintain the Surface in accordance with FieldTurf's Maintenance Manual and other written instructions; (l) use which is not generally accepted as a typical use of the Surface; (m) improper installation; (n) improper protection from excessive loads; and/or (o) floods and/or other events introducing water to the Surface.

Furthermore, this Warranty ***does not cover nor will be FieldTurf be liable for*** (1) damages due to personal injury; (2) change of the Surface appearance due to excessive ultraviolet (UV) exposure and/or or heat; (3) damage due to unpredictable and/or unknown causes;(4) damage and/or performance reductions due to improper control of atmospheric soiling and/or contamination; (5) stains and/or discoloration of the Surface; and (6) costs associated with the temporary and/or permanent closing of the facility in which the Surface was installed. FieldTurf does not warrant or guarantee the accuracy or sufficiency of any drawings, plans, or specifications not prepared by FieldTurf and which are used in connection with installing the Surface. This Warranty shall be of no force and effect if FieldTurf is not paid in full for the Surface and FieldTurf's obligations under this Warranty are expressly contingent upon FieldTurf being paid in full for the Surface.

This Warranty shall not apply to the Surface, or any part thereof, which has been repaired or altered without FieldTurf's prior written consent. No allowance or credit will be granted for any repairs or alterations to the Surface made by Owner except as authorized by this Warranty.

THIS WARRANTY IS EXPRESSLY IN LIEU OF ALL OTHER WARRANTIES, EXPRESSED, IMPLIED OR ARISING BY OPERATION OF LAW, INCLUDING (BUT NOT LIMITED TO) ANY IMPLIED WARRANTIES OF MERCHANTABILITY OR FITNESS FOR A PARTICULAR PURPOSE AND OF ALL OTHER OBLIGATIONS OR LIABILITIES ON FIELDTURF'S PART. FIELDTURF USA, INC. SHALL NOT BE LIABLE FOR ANY DAMAGES UNDER TORT, CONTRACT OR STRICT LIABILITY AND/ OR INCIDENTAL, CONSEQUENTIAL, SPECIAL OR INDIRECT DAMAGES UNDER THIS WARRANTY.

FIELDTURF'S SOLE OBLIGATION UNDER THIS WARRANTY IS TO REPAIR OR REPLACE AT ITS SOLE DISCRETION ALL OR ANY PORTION OF THE SURFACE WHICH MAY BE DETERMINED TO BE DEFECTIVE. FIELDTURF'S LIABILITY FOR ANY SUCH REPAIR OR REPALCEMENT SHALL IN NO EVENT EXCEED THE AMOUNT OF THE PURCHASE PRICE ATTRIBUTABLE TO THE DEFECTIVE PORTION OF THE SURFACE WHICH IS REPAIRED OR REPLACED.

MAINTENANCE INSTRUCTIONS: FieldTurf has made available or supplied Owner with a copy of the Maintenance Manual containing written instructions for the care and maintenance of the Surface. Owner acknowledges receipt of said Maintenance Manual and agrees to comply with and carry out the instructions contained in it as a condition of this Warranty. The terms of the Maintenance Manual are incorporated in this Warranty by reference. If a Maintenance Manual is not received by Owner at the time of issuance of this warranty, it is the owner's obligation to request and maintain record of receipt.

CLAIMS: All claims by Owner under this Warranty must be made in writing to the following address within thirty calendar days after Owner learns of any defect giving rise to the claim: FieldTurf USA, Inc. Indoor Division, 175 N Industrial Blvd. Calhoun, Georgia, 30701.

INSPECTIONS AND TESTS: FieldTurf shall be allowed to inspect the Surface during reasonable business hours regarding any claim, which Owner makes under this Warranty; to be present at and to analyze the results of all tests conducted by Owner or others; and to conduct such tests as FieldTurf in

Sample

Tarkett Sports

its discretion may deem advisable. Owner shall promptly furnish FieldTurf with a copy of all written reports of any tests performed by Owner or on Owner's behalf. FieldTurf shall not be responsible for any costs or expenses incurred by Owner or others with respect to such tests, except that FieldTurf shall pay for the costs of all tests and analyses conducted or directed by FieldTurf representatives.

INSTALLATION SYSTEMS: FieldTurf provides specific installation systems to accommodate a variety of building conditions. It is critical that care is taken by both the owner and the contractor (and other interested parties) performing the work to understand the benefits and limitations of each system and select the appropriate system. All concrete slabs should be carefully inspected for typical, predictable and acceptable conditions, especially as it concerns moisture testing. Existing buildings and structures that are remodeled may not contain effective vapor retarders/barriers, exhibit poor drainage and/or other conditions that allow the introduction of moisture. All FieldTurf installation systems are based on typical, predictable and acceptable concrete conditions. For fully adhered systems and GreenLay products, concrete must maintain conditions consistent with FieldTurf's written tolerances, as outlined in FieldTurf's installation guidelines. FieldTurf does not warrant against the loss of bond or all other adverse effects upon any installation system where conditions exceed FieldTurf's written tolerances; this includes, but is not limited to, the presence and/or accumulation of standing water on the surface of the concrete slab or over other installation systems, including moisture mitigation products that FieldTurf does not provide. In the event of a claim hereunder, FieldTurf reserves the right to perform its own inspections during normal business hours, in its sole discretion, to determine the validity of the claim. FieldTurf does not warrant against the effect of high moisture conditions and/or other adverse conditions existing within any and all building materials, components, elements and conditions.

All FieldTurf installation systems require the ability to bond directly to concrete or approved alternative subfloor surface. Sealers, existing adhesives and/or any other contaminants may affect the performance of any FieldTurf installation system. Strict adherence to ASTM F710 is required. The use of solvents to remove existing adhesives is prohibited. FieldTurf does not warrant against any damage caused by the existence and/or application of moisture mitigation systems without FieldTurf's express written approval and consent. FieldTurf expressly excludes from this Warranty the movement of joints and the development of cracks, divots, scratches and gouges in the subfloor surface.

The bridging of moving joints is expressly prohibited with the exception of FieldTurf installation systems incorporating Tarkolay products provided those joints are properly prepared.

Projects must be registered using FieldTurf's specific warranty registration form within thirty (30) days of substantial completion of the installation of the Surface. A sample warranty may be provided upon request, but the Warranty will not be issued by FieldTurf without timely submittal of FieldTurf's warranty registration form; all FieldTurf registration forms must include evidence of moisture testing and written evidence of inspections, both of which must be acceptable to FieldTurf, along with the FieldTurf installation system type used. FieldTurf does not validate moisture testing information and does not interpret such testing, but is collected for data and reference purposes. FieldTurf does not interpret existing conditions. PH testing is required and must also meet and remain within FieldTurf's written tolerances.

Installation Systems Moisture Tolerances Applicable to this Warranty:

1.) Full spread with Beybond 50 with a moisture tolerance of ninety percent (90%) RH per ASTM F2170.
~~1.)~~2.) Full spread with Multi-Poxy with a moisture tolerance of ninety-eight percent (98%) RH per ASTM F2170.
~~2.)~~3.) Tarkolay with Multi-Poxy which does not require moisture testing and is the only system recommended to bridge properly prepared moving joints or minor cracks.

GOVERNING LAW AND CONSENT: This Warranty shall be governed by and interpreted in accordance with the law of the State of Georgia.

For more information please contact the Indoor division of FieldTurf at (888) 364-6541.

Sample

EFFECTIVE DATE: The Effective Date of this Warranty is the _____day of _____, 2019~~6~~.

OWNER'S NAME	**FieldTurf USA, Inc.**
By:_____	By:_____
Title:_____	Title:_____
Date:_____	Date:_____

Sample

For more information please contact the Indoor division of FieldTurf at (888) 364-6541.

FieldTurf
A Tarkett Sports Company

THE ULTIMATE
SURFACE EXPERIENCE

COURT WARRANTY

Beynon Sports Surfaces and California Products Corp. guarantees the installation of the tennis court surface to be free from defects in materials and workmanship for a period of (1) one year from completion of installation. Should any defect occur, repairs will be made free of charge. This guarantee covers only the materials and work performed by Beynon Sports Surfaces and their sub-contractors.

The guarantee covers tennis court use only, and shall not be interpreted as holding Beynon Sports Surfaces or California Products Corp. responsible for any deterioration of the work due to normal use or the abuses of the installation. Abuse of the installation specifically includes, but is not limited to:

1) Use of the tennis/basketball court by motor vehicles or equipment.

2) Use of the tennis court for other than tennis activity.

3) Damage to the surface caused by vandalism.

The owner acknowledges that the sub-base and the base are a completely separate installation and are not covered by this guarantee. This guarantee does not cover the base asphalt/concrete or problems in the court surfacing system which are a result of defect, cracking, shifting or deterioration of the base asphalt/concrete or vegetation growth through the base asphalt/concrete.

The court striping, when provided by Beynon Sports surfaces is guaranteed as above to be free from defects in materials and workmanship. Fading due to normal use is excluded.

This warranty is the exclusive and sole remedy of the owner. Prior to warranty being effective, all bills associated with the installation of the court system must be paid in full.

_____

Beynon Sports Surfaces California Products Corp.

_____

Project

_____

Date

Tarkett Sports

This Warranty shall not apply to the Surface, or any part thereof, which has been repaired or altered without FieldTurf's prior written consent. No allowance or credit will be granted for any repairs or alterations to the Surface made by Owner except as authorized by this Warranty.

THIS WARRANTY IS EXPRESSLY IN LIEU OF ALL OTHER WARRANTIES, EXPRESSED, IMPLIED OR ARISING BY OPERATION OF LAW, INCLUDING (BUT NOT LIMITED TO) ANY IMPLIED WARRANTIES OF MERCHANTABILITY OR FITNESS FOR A PARTICULAR PURPOSE AND OF ALL OTHER OBLIGATIONS OR LIABILITIES ON FIELDTURF'S PART. FIELDTURF USA, INC. SHALL NOT BE LIABLE FOR ANY DAMAGES UNDER TORT, CONTRACT OR STRICT LIABILITY AND/ OR INCIDENTAL, CONSEQUENTIAL, SPECIAL OR INDIRECT DAMAGES UNDER THIS WARRANTY.

FIELDTURF'S SOLE OBLIGATION UNDER THIS WARRANTY IS TO REPAIR OR REPLACE AT ITS SOLE DISCRETION ALL OR ANY PORTION OF THE SURFACE WHICH MAY BE DETERMINED TO BE DEFECTIVE. FIELDTURF'S LIABILITY FOR ANY SUCH REPAIR OR REPALCEMENT SHALL IN NO EVENT EXCEED THE AMOUNT OF THE PURCHASE PRICE ATTRIBUTABLE TO THE DEFECTIVE PORTION OF THE SURFACE WHICH IS REPAIRED OR REPLACED.

MAINTENANCE INSTRUCTIONS: FieldTurf has made available or supplied Owner with a copy of the Maintenance Manual containing written instructions for the care and maintenance of the Surface. Owner acknowledges receipt of said Maintenance Manual and agrees to comply with and carry out the instructions contained in it as a condition of this Warranty. The terms of the Maintenance Manual are incorporated in this Warranty by reference. If a Maintenance Manual is not received by Owner at the time of issuance of this warranty, it is the owner's obligation to request and maintain record of receipt.

CLAIMS: All claims by Owner under this Warranty must be made in writing to the following address within thirty calendar days after Owner learns of any defect giving rise to the claim: FieldTurf USA, Inc. Indoor Division, 175 N Industrial Blvd. Calhoun, Georgia, 30701.

INSPECTIONS AND TESTS: FieldTurf shall be allowed to inspect the Surface during reasonable business hours regarding any claim, which Owner makes under this Warranty; to be present at and to analyze the results of all tests conducted by Owner or others; and to conduct such tests as FieldTurf in its discretion may deem advisable. Owner shall promptly furnish FieldTurf with a copy of all written reports of any tests performed by Owner or on Owner's behalf. FieldTurf shall not be responsible for any costs or expenses incurred by Owner or others with respect to such tests, except that FieldTurf shall pay for the costs of all tests and analyses conducted or directed by FieldTurf representatives.

GOVERNING LAW AND CONSENT: This Warranty shall be governed by and interpreted in accordance with the law of the State of Georgia.

EFFECTIVE DATE: The Effective Date of this Warranty is the _____day of _____, 2014.

OWNER'S NAME	**FieldTurf USA, Inc.**
By:_____	By:_____
Title:_____	Title:_____
Date:_____	Date:_____

For more information please contact the Indoor division of FieldTurf at (888) 364-6541.

SAMPLE

BEYNON®

A Tarkett Sports Company

5-YEAR WARRANTY

SAMPLE

INSTALLED AT

(TYPE IN LOCATION)

16 Alt Road - Hunt Valley, Maryland 21030 | 410-771-9473 | FAX: 410-771-9479

WARRANTOR: Beynon Sports Surfaces, Inc. ("BSS")
16 Alt Road - Hunt Valley, Maryland 21030

OWNER: (“Owner”)

PROJECT: BSS(TYPE PRODUCT) Track Surface (the "Surface(s)")
Installed at

WARRANTY: BSS warrants to Owner, subject to the terms and conditions contained in this Warranty, that the above-described Surface is free from defects in materials and workmanship under normal use and service, and that the Surface was installed in accordance with the drawings, plans and specifications for the Surface.

WARRANTY PERIOD: This Warranty shall be in force for a period of five years from the Effective Date as defined below.

RESPONSE FOR WARRANTY REPAIRS: BSS agrees to perform all repairs required by this Warranty within a reasonable time upon receiving proper written notice from Owner as provided below and after BSS carries out all inspections and tests which it may deem necessary or advisable.

LIMITATIONS AND EXCLUSIONS: This Warranty does not apply to any defect, failure, damage, or undue wear in or to the Surface caused by or connected with: (a) improper or insufficient design or engineering, or improper or insufficient project drawings, plans or specifications which were not provided by BSS; (b) an inadequate or defective pre-existing base or surface under the Surface covered by this Warranty, including but not limited to separations of concrete slab(s) or deterioration of asphalt not installed by BSS ; (c) the inherent characteristics of the surface or other supporting materials upon which the Surface is installed; (d) misuse, abuse, or deliberate acts of vandalism; (e) accident, negligence, or acts of God; (f) excessive static or dynamic loads; (g) use of improper cleaning methods; (h) moisture accumulation under the Surface after installation which may cause: 1) bubbles under the Surface, 2) adhesion problems or failures, or 3) other problems or failures not related to defects in materials; or (i) Owner's failure to care for and maintain the Surface in accordance with BSS's written instructions.

This Warranty does not cover any staining, discolorations, or other damage caused by excessive moisture from such things as flooding, plumbing and appliance leaks, or other water leakage. BSS does not warrant or guarantee the accuracy or sufficiency of any drawings, plans or specifications not prepared by BSS and which were used in connection with installing the Surface. This Warranty shall not apply to the Surface, or any part thereof, which has been repaired or altered without BSS's prior written consent. No allowance or credit will be granted for any repairs or alterations to the Surface made by Owner except as authorized by this Warranty.

SAMPLE

THIS WARRANTY IS EXPRESSLY IN LIEU OF ALL OTHER WARRANTIES, EXPRESS, IMPLIED OR ARISING BY OPERATION OF LAW, INCLUDING (BUT NOT LIMITED TO) ANY IMPLIED WARRANTIES OF MERCHANTABILITY OR FITNESS FOR A PARTICULAR PURPOSE AND OF ALL OTHER OBLIGATIONS OR LIABILITIES ON BSS'S PART. BSS SHALL NOT BE LIABLE FOR ANY INCIDENTAL, CONSEQUENTIAL, SPECIAL OR INDIRECT DAMAGES UNDER THIS WARRANTY, INCLUDING BUT NOT LIMITED TO ANY ACTIONS ALLEGING DAMAGES UNDER TORT, CONTRACT OR STRICT LIABILITY. THIS WARRANTY SHALL BE VOID IF CONTRACTOR HAS NOT BEEN PAID IN FULL FOR ITS WORK.

BSS'S SOLE OBLIGATION UNDER THIS WARRANTY IS TO REPAIR OR REPLACE AT ITS SOLE DISCRETION ALL OR ANY PORTION OF THE SURFACE WHICH MAY BE DETERMINED TO BE DEFECTIVE. BSS'S LIABILITY FOR ANY SUCH REPAIR OR REPLACEMENT SHALL IN NO EVENT EXCEED THE AMOUNT OF THE PURCHASE PRICE ATTRIBUTABLE TO THE DEFECTIVE PORTION OF THE SURFACE WHICH IS REPAIRED OR REPLACED.

BSS neither assumes nor authorizes any person to assume for it any other liability in connection with the sale, installation or use of the Surface. This Warranty shall not be construed to be an obligation of any performance or other bond furnished by any party in connection with BSS's contract for the Surface and shall not be enforceable against any such party. Labor and materials needed for any repair work not covered by this Warranty will be billed to Owner at BSS's regular hourly rates and materials charges.

WARRANTY DISCLAIMER ON PRE-EXISTING BASE AND UNDERLYING SURFACE COATING: All pre-existing base and surface coating (if any) upon which the new BSS Surface has been installed is specifically excluded from any coverage under this Warranty. BSS's previous acceptance of any such pre-existing base or surface coating for installation of the Surface shall not be deemed to constitute a warranty or other guaranty thereof. Depressions in any pre-existing base or surface coating have been patched by BSS only as specified in the written plans and specifications for the Surface. Owner further acknowledges and agrees that any damage caused to the Surface by (a) any pre-existing base or surface coating and (b) any cracks which are now in or which may develop hereafter in the pre-existing base or surface coating are specifically excluded from any coverage under this Warranty.

MAINTENANCE INSTRUCTIONS: BSS has supplied Owner with a copy of the written Maintenance Instructions containing directions for the care and maintenance of the Surface. Owner acknowledges receipt of said Instructions and agrees to comply with and carry out the directions contained in it as a condition of this Warranty. The terms of the Instructions are incorporated in this Warranty by reference.

CLAIMS: All claims by Owner under this Warranty must be made in writing to the following address within thirty calendar days after Owner learns of any defect giving rise to the claim: Contract Administrator, Beynon Sports Surfaces, Inc., 16 Alt Road, Hunt Valley, MD 21030.

INSPECTION AND TESTS: BSS shall be allowed to inspect the Surface during reasonable business hours regarding any claim which Owner makes under this Warranty; to be present at and to analyze the results of all tests conducted by Owner or others; and to conduct such tests as BSS in its discretion may deem advisable. Owner shall promptly furnish BSS with a copy of all written reports of any tests performed by Owner or on Owner's behalf. BSS shall not be responsible for any costs or expenses incurred by Owner or

SAMPLE

others with respect to such tests, except that BSS shall pay for the costs of all tests and analyses conducted or directed by BSS's representatives.

EFFECTIVE DATE: The Effective Date of this Warranty is

GOVERNING LAW: This Warranty shall be governed by and interpreted in accordance with the laws of the State of Maryland.

SAMPLE

("Owner")	**Beynon Sports Surfaces, Inc.** **16 Alt Rd** **Hunt Valley, MD 21030**
By: _____	By: _____ **Drew Beynon**
Title: _____	Title: Chief Operating Officer
Date: _____	Date: _____

BEYNON®

A Tarkett Sports Company

10-YEAR WARRANTY

SAMPLE

INSTALLED AT

16 Alt Road - Hunt Valley, Maryland 21030 | 410-771-9473 | FAX: 410-771-9479

WARRANTOR: Beynon Sports Surfaces, Inc. ("BSS")
16 Alt Road - Hunt Valley, Maryland 21030

OWNER: (“Owner”)

PROJECT: BSS(TYPE PRODUCT) Track Surface (the "Surface(s)")
Installed at

WARRANTY: BSS warrants to Owner, subject to the terms and conditions contained in this Warranty, that the above-described Surface is free from defects in materials and workmanship under normal use and service, and that the Surface was installed in accordance with the drawings, plans and specifications for the Surface.

WARRANTY PERIOD: This Warranty shall be in force for a period of ten years from the Effective Date as defined below.

RESPONSE FOR WARRANTY REPAIRS: BSS agrees to perform all repairs required by this Warranty within a reasonable time upon receiving proper written notice from Owner as provided below and after BSS carries out all inspections and tests which it may deem necessary or advisable.

LIMITATIONS AND EXCLUSIONS: This Warranty does not apply to any defect, failure, damage, or undue wear in or to the Surface caused by or connected with: (a) improper or insufficient design or engineering, or improper or insufficient project drawings, plans or specifications which were not provided by BSS; (b) an inadequate or defective pre-existing base or surface under the Surface covered by this Warranty, including but not limited to separations of concrete slab(s) or deterioration of asphalt not installed by BSS ; (c) the inherent characteristics of the surface or other supporting materials upon which the Surface is installed; (d) misuse, abuse, or deliberate acts of vandalism; (e) accident, negligence, or acts of God; (f) excessive static or dynamic loads; (g) use of improper cleaning methods; (h) moisture accumulation under the Surface after installation which may cause: 1) bubbles under the Surface, 2) adhesion problems or failures, or 3) other problems or failures not related to defects in materials; or (i) Owner's failure to care for and maintain the Surface in accordance with BSS's written instructions.

This Warranty does not cover any staining, discolorations, or other damage caused by excessive moisture from such things as flooding, plumbing and appliance leaks, or other water leakage. BSS does not warrant or guarantee the accuracy or sufficiency of any drawings, plans or specifications not prepared by BSS and which were used in connection with installing the Surface. This Warranty shall not apply to the Surface, or any part thereof, which has been repaired or altered without BSS's prior written consent. No allowance or credit will be granted for any repairs or alterations to the Surface made by Owner except as authorized by this Warranty.

SAMPLE

THIS WARRANTY IS EXPRESSLY IN LIEU OF ALL OTHER WARRANTIES, EXPRESS, IMPLIED OR ARISING BY OPERATION OF LAW, INCLUDING (BUT NOT LIMITED TO) ANY IMPLIED WARRANTIES OF MERCHANTABILITY OR FITNESS FOR A PARTICULAR PURPOSE AND OF ALL OTHER OBLIGATIONS OR LIABILITIES ON BSS'S PART. BSS SHALL NOT BE LIABLE FOR ANY INCIDENTAL, CONSEQUENTIAL, SPECIAL OR INDIRECT DAMAGES UNDER THIS WARRANTY, INCLUDING BUT NOT LIMITED TO ANY ACTIONS ALLEGING DAMAGES UNDER TORT, CONTRACT OR STRICT LIABILITY. THIS WARRANTY SHALL BE VOID IF CONTRACTOR HAS NOT BEEN PAID IN FULL FOR ITS WORK.

BSS'S SOLE OBLIGATION UNDER THIS WARRANTY IS TO REPAIR OR REPLACE AT ITS SOLE DISCRETION ALL OR ANY PORTION OF THE SURFACE WHICH MAY BE DETERMINED TO BE DEFECTIVE. BSS'S LIABILITY FOR ANY SUCH REPAIR OR REPLACEMENT SHALL IN NO EVENT EXCEED THE AMOUNT OF THE PURCHASE PRICE ATTRIBUTABLE TO THE DEFECTIVE PORTION OF THE SURFACE WHICH IS REPAIRED OR REPLACED.

BSS neither assumes nor authorizes any person to assume for it any other liability in connection with the sale, installation or use of the Surface. This Warranty shall not be construed to be an obligation of any performance or other bond furnished by any party in connection with BSS's contract for the Surface and shall not be enforceable against any such party. Labor and materials needed for any repair work not covered by this Warranty will be billed to Owner at BSS's regular hourly rates and materials charges.

WARRANTY DISCLAIMER ON PRE-EXISTING BASE AND UNDERLYING SURFACE COATING: All pre-existing base and surface coating (if any) upon which the new BSS Surface has been installed is specifically excluded from any coverage under this Warranty. BSS's previous acceptance of any such pre-existing base or surface coating for installation of the Surface shall not be deemed to constitute a warranty or other guaranty thereof. Depressions in any pre-existing base or surface coating have been patched by BSS only as specified in the written plans and specifications for the Surface. Owner further acknowledges and agrees that any damage caused to the Surface by (a) any pre-existing base or surface coating and (b) any cracks which are now in or which may develop hereafter in the pre-existing base or surface coating are specifically excluded from any coverage under this Warranty.

MAINTENANCE INSTRUCTIONS: BSS has supplied Owner with a copy of the written Maintenance Instructions containing directions for the care and maintenance of the Surface. Owner acknowledges receipt of said Instructions and agrees to comply with and carry out the directions contained in it as a condition of this Warranty. The terms of the Instructions are incorporated in this Warranty by reference.

CLAIMS: All claims by Owner under this Warranty must be made in writing to the following address within thirty calendar days after Owner learns of any defect giving rise to the claim: Contract Administrator, Beynon Sports Surfaces, Inc., 16 Alt Road, Hunt Valley, MD 21030.

INSPECTION AND TESTS: BSS shall be allowed to inspect the Surface during reasonable business hours regarding any claim which Owner makes under this Warranty; to be present at and to analyze the results of all tests conducted by Owner or others; and to conduct such tests as BSS in its discretion may deem advisable. Owner shall promptly furnish BSS with a copy of all written reports of any tests performed by Owner or on Owner's behalf. BSS shall not be responsible for any costs or expenses incurred by Owner or

SAMPLE

others with respect to such tests, except that BSS shall pay for the costs of all tests and analyses conducted or directed by BSS's representatives.

EFFECTIVE DATE: The Effective Date of this Warranty is

GOVERNING LAW: This Warranty shall be governed by and interpreted in accordance with the laws of the State of Maryland.

SAMPLE

("Owner")

Beynon Sports Surfaces, Inc
16 Alt Rd
Hunt Valley, MD 21030

By: _____

By: _____
Drew Beynon

Title: _____

Title: Chief Operating Officer

Date: _____

Date: _____

FieldTurf®

A Tarkett Sports Company

VERTEX CORE

INSURED

10 YEARS

WARRANTY

YOU CAN HAVE IT ALL

This is one of those rare moments when you can truly have it all. We created Vertex CORE to deliver the perfect combination of performance and beauty. Vertex CORE delivers leading agility, safety, durability and aesthetics.

We equipped the system with, not only one of our legendary fibers, but two! We utilized our renowned Classic HD slit-film fiber and teamed it up with our CORE monofilament super fiber to construct Vertex CORE.

We strive to only deliver excellence. Our unwavering dedication to quality continues to fuel us to Change The Game.

ALL THE BELLS AND WHISTLES

Vertex CORE features all of FieldTurf's exclusive system technology: CORE & Classic HD fibers for performance, heavyweight infill for safety and SureLock coating drainage for durability and usage. From top to bottom, the system is designed to deliver at the elite level. The system can also be equipped with our renowned cooling infill, CoolPlay.

EXCLUSIVE SUPER FIBER

CORE's multi-layer dual-polymer fiber design optimizes the system's performance, delivering a more realistic, textured, grass-like shape with optimal durability and resiliency

PROVEN SAFETY

The findings of long-term independent research show that FieldTurf's heavyweight systems are safer than, or equal to, competitive systems.

INDUSTRY LEADING WARRANTY

We're not scared to back up what we preach. Vertex CORE comes with an industry leading 10-year warranty. Don't jeopardize your energy, time, and investment; protect it.

CERTIFIED ELITE

Tested and certified by leading international governing bodies, Vertex CORE is optimal for football, soccer and rugby.

*Vertex CORE is available in several World Rugby, FIFA Quality Pro & Quality systems.

DESIGNED BEAUTIFUL

As both fibers are tufted together in the same stitch, the system delivers a superior aesthetic appearance. Make your field the talk of the town

LEADING DRAINAGE

FieldTurf's SureLock backing delivers premier strength, stability and drainage. The patented finger-unit seals only the rows of fibers, leaving the backing 40% porous, allowing for leading drainage.

VERTEX CORE

TWO OF THE WORLD'S LEADING FIBERS

We equipped the system with not only one of our legendary fibers, but two! We utilized our renowned Classic HD slit-film fiber and teamed it up with our CORE monofilament super fiber to construct Vertex CORE.

PERFORMANCE AND SAFETY BACKED BY SCIENCE

FIBER PERFORMANCE INDEX 90

TEAR	RECOVERY	U.V.	FEEL
93	92	100	59

TESTED BY LABOSPORT

FPI AVERAGE	VERTEX CORE FPI
76	90*

*Score for CORE2 fiber. Averages based on 37 certificates issued in 2016.

FIFA QUALITY PRO

TEST	QUALITY PRO	VERTEX CORE
Ball Roll	4m - 8m	✓
Ball Rebound	0.6m - 0.85m	✓
Shock Absorption	62% - 68%	✓
Vertical Deformation	6mm - 10mm	✓
Rotational Resistance	32nm - 43nm	✓

PENN STATE SPORTS SURFACE RESEARCH CENTER

DURABILITY TESTING

CYCLES	SCORE
50,000	PERFECT: 10/10
100,000	PERFECT: 10/10
150,000	PERFECT: 10/10

SAFETY RESEARCH

ALL INJURIES

VERTEX CORE >9.0 LB/FT2	6-8.9 LB/FT2	3-5.9 LB/FT2	0-2.9 LB/FT2
17.4	25.4	30.3	31.3

Results based on 2.5" Vertex CORE system. Original Research Incidence, Mechanisms, and Severity of Game-Related High School Football Injuries Across Artificial Turf Systems of Various Infill Weights.

VERTEX CORE

"We are excited to upgrade our game field to the latest FieldTurf technology. It is our goal each year to provide the highest quality surface for both the New England Patriots and New England Revolution, and we were eager to take advantage of FieldTurf's latest innovations."

Jim Nolan

CHIEF OPERATING OFFICER
GILLETTE STADIUM

Gillette STADIUM

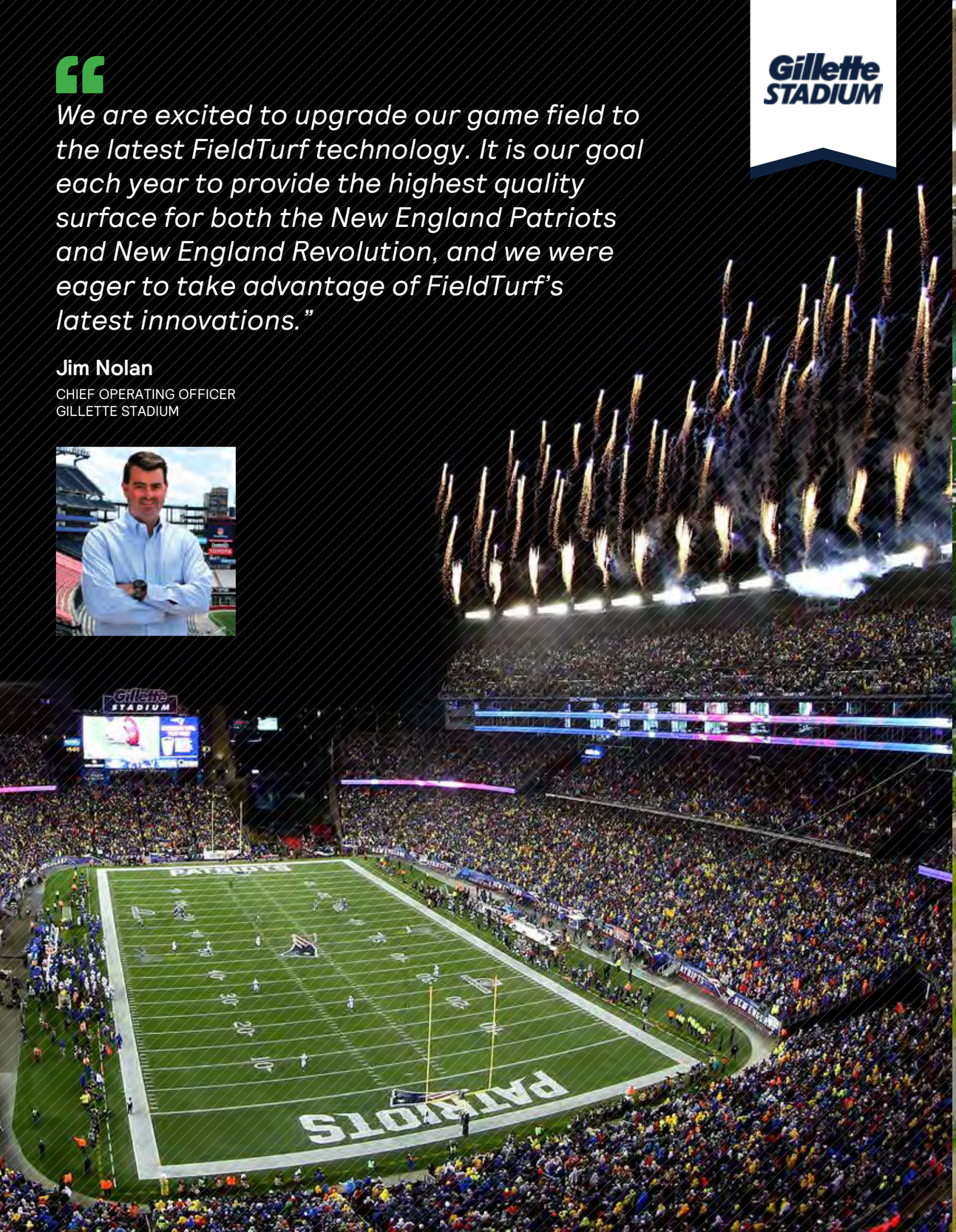

VERTEX CORE

CHANGE THE GAME

THE TARKETT SPORTS FAMILY - LEADERS IN SPORTS SURFACING

Tarkett SPORTS | FieldTurf® A Tarkett Sports Company | BEYNON® A Tarkett Sports Company | renner® A Beynon Sports Company | GRASSMASTER By Tarkett Sports | PLAYMASTER By Tarkett Sports

FieldTurf® A Tarkett Sports Company

800-724-2969 | info@fieldturf.com | fieldturf.com

FieldTurf®
A Tarkett Sports Company

TECHNICAL PRODUCT SPECIFICATION

VERTEX CORE

MONOFILAMENT/SLIT-FILM 2.5

PROPERTY	VALUE	UNITS	METHOD
Product Stock Code	FTVTC-1		
Pile Yarn Type	UV-resistant polyethylene		n/a
Yarn Structure 1	Ridged Monofilament		n/a
Yarn Denier 1	14000	Denier	D1577
Tape Thickness 1	380	Microns	
Yarn Structure 2	Slit-Film		
Yarn Denier 2	5000	Denier	D1577
Tape Thickness 2	130	Microns	
Pile Height	2.5	inches	D5823
Pile Weight	47	oz/yd^2	D5848
Primary Backing Weight	7+	oz/yd^2	D5848
Secondary Backing Weight (Finger-Unit)	14+	oz/yd^2	D5848
Total Carpet Weight	68	oz/yd^2	D5848
Stitch Gauge	3/4 inch centers		D5793
Tuft Bind	8+	lbs/force	D1335
Grab Tear Length	>200	lbs/force	D5034
Grab Tear Width	>200	lbs/force	D5034
Pill Burn Test	Pass		D2859
Impact Attenuation (Gmax)	<200	gmax	F1936
Water Permeability	>40	inch/hour	DIN 18-035
Cryogenic SBR Rubber Infill	3	Lbs/ft2	
Sand	6.2	Lbs/ft2	
Total Product Weight	1393	oz/yd^2	

Issue Date: 7/29/2020

Disclaimer: Variation of +/-5% on above listed property values is within normal manufacturing tolerances

FieldTurf®
A Tarkett Sports Company

TECHNICAL PRODUCT SPECIFICATION

VERTEX CORE

MONOFILAMENT/SLIT-FILM 2.5

PROPERTY	VALUE	UNITS	METHOD
Product Stock Code	FTVTC-1		
Pile Yarn Type	UV-resistant polyethylene		n/a
Yarn Structure 1	Ridged Monofilament		n/a
Yarn Denier 1	14000	Denier	D1577
Tape Thickness 1	380	Microns	
Yarn Structure 2	Slit-Film		
Yarn Denier 2	5000	Denier	D1577
Tape Thickness 2	130	Microns	
Pile Height	2.5	inches	D5823
Pile Weight	47	oz/yd^2	D5848
Primary Backing Weight	7+	oz/yd^2	D5848
Secondary Backing Weight (Finger-Unit)	14+	oz/yd^2	D5848
Total Carpet Weight	68	oz/yd^2	D5848
Stitch Gauge	3/4 inch centers		D5793
Tuft Bind	8+	lbs/force	D1335
Grab Tear Length	>200	lbs/force	D5034
Grab Tear Width	>200	lbs/force	D5034
Pill Burn Test	Pass		D2859
Impact Attenuation (Gmax)	<200	gmax	F1936
Water Permeability	>40	inch/hour	DIN 18-035
CoolPlay Infill	0.6	Lbs/ft2	
Cryogenic SBR Rubber Infill	2.4	Lbs/ft2	
Sand	6.2	Lbs/ft2	
Total Product Weight	1393	oz/yd^2	

Issue Date: 7/29/2020

Disclaimer: Variation of +/-5% on above listed property values is within normal manufacturing tolerances

FieldTurf®
A Tarkett Sports Company

TECHNICAL PRODUCT SPECIFICATION

VERTEX CORE

MONOFILAMENT/SLIT-FILM 2

PROPERTY	VALUE	UNITS	METHOD
Product Stock Code	FTVTC-2		
Pile Yarn Type	UV-resistant polyethylene		n/a
Yarn Structure 1	Ridged Monofilament		n/a
Yarn Denier 1	14000	Denier	D1577
Tape Thickness 1	380	Microns	
Yarn Structure 2	Slit-Film		
Yarn Denier 2	5000	Denier	D1577
Tape Thickness 2	130	Microns	
Pile Height	2	inches	D5823
Pile Weight	39	oz/yd^2	D5848
Primary Backing Weight	7+	oz/yd^2	D5848
Secondary Backing Weight (Finger-Unit)	14+	oz/yd^2	D5848
Total Carpet Weight	60	oz/yd^2	D5848
Stitch Gauge	3/4 inch centers		D5793
Tuft Bind	8+	lbs/force	D1335
Grab Tear Length	>200	lbs/force	D5034
Grab Tear Width	>200	lbs/force	D5034
Pill Burn Test	Pass		D2859
Impact Attenuation (Gmax)	<200	gmax	F1936
Water Permeability	>40	inch/hour	DIN 18-035
Cryogenic SBR Rubber Infill	2.6	Lbs/ft2	
Sand	3.65	Lbs/ft2	
Total Product Weight	960	oz/yd^2	

Issue Date: 7/29/2020

Disclaimer: Variation of +/-5% on above listed property values is within normal manufacturing tolerances

FieldTurf®
A Tarkett Sports Company

TECHNICAL PRODUCT SPECIFICATION

VERTEX CORE

MONOFILAMENT/SLIT-FILM 2

PROPERTY	VALUE	UNITS	METHOD
Product Stock Code	FTVTC-2		
Pile Yarn Type	UV-resistant polyethylene		n/a
Yarn Structure 1	Ridged Monofilament		n/a
Yarn Denier 1	14000	Denier	D1577
Tape Thickness 1	380	Microns	
Yarn Structure 2	Slit-Film		
Yarn Denier 2	5000	Denier	D1577
Tape Thickness 2	130	Microns	
Pile Height	2	inches	D5823
Pile Weight	39	oz/yd^2	D5848
Primary Backing Weight	7+	oz/yd^2	D5848
Secondary Backing Weight (Finger-Unit)	14+	oz/yd^2	D5848
Total Carpet Weight	60	oz/yd^2	D5848
Stitch Gauge	3/4 inch centers		D5793
Tuft Bind	8+	lbs/force	D1335
Grab Tear Length	>200	lbs/force	D5034
Grab Tear Width	>200	lbs/force	D5034
Pill Burn Test	Pass		D2859
Impact Attenuation (Gmax)	<200	gmax	F1936
Water Permeability	>40	inch/hour	DIN 18-035
CoolPlay Infill	0.6	Lbs/ft2	
Cryogenic SBR Rubber Infill	2	Lbs/ft2	
Sand	3.65	Lbs/ft2	
Total Product Weight	960	oz/yd^2	

Issue Date: 7/29/2020

Disclaimer: Variation of +/-5% on above listed property values is within normal manufacturing tolerances

FieldTurf®
A Tarkett Sports Company

TECHNICAL PRODUCT SPECIFICATION

VERTEX CORE

MONOFILAMENT/SLIT-FILM 2.25

PROPERTY	VALUE	UNITS	METHOD
Product Stock Code	FTVTC-57		
Pile Yarn Type	UV-resistant polyethylene		n/a
Yarn Structure 1	Ridged Monofilament		n/a
Yarn Denier 1	14000	Denier	D1577
Tape Thickness 1	380	Microns	
Yarn Structure 2	Slit-Film		
Yarn Denier 2	5000	Denier	D1577
Tape Thickness 2	130	Microns	
Pile Height	2.25	inches	D5823
Pile Weight	43	oz/yd^2	D5848
Primary Backing Weight	7+	oz/yd^2	D5848
Secondary Backing Weight (Finger-Unit)	14+	oz/yd^2	D5848
Total Carpet Weight	64	oz/yd^2	D5848
Stitch Gauge	3/4 inch centers		D5793
Tuft Bind	8+	lbs/force	D1335
Grab Tear Length	>200	lbs/force	D5034
Grab Tear Width	>200	lbs/force	D5034
Pill Burn Test	Pass		D2859
Impact Attenuation (Gmax)	<200	gmax	F1936
Water Permeability	>40	inch/hour	DIN 18-035
Cryogenic SBR Rubber Infill	2.2	Lbs/ft2	
Sand	6.2	Lbs/ft2	
Total Product Weight	1274	oz/yd^2	

Issue Date: 7/29/2020

Disclaimer: Variation of +/-5% on above listed property values is within normal manufacturing tolerances

FieldTurf®
A Tarkett Sports Company

TECHNICAL PRODUCT SPECIFICATION

VERTEX CORE

MONOFILAMENT/SLIT-FILM 2.25

PROPERTY	VALUE	UNITS	METHOD
Product Stock Code	FTVTC-57		
Pile Yarn Type	UV-resistant polyethylene		n/a
Yarn Structure 1	Ridged Monofilament		n/a
Yarn Denier 1	14000	Denier	D1577
Tape Thickness 1	380	Microns	
Yarn Structure 2	Slit-Film		
Yarn Denier 2	5000	Denier	D1577
Tape Thickness 2	130	Microns	
Pile Height	2.25	inches	D5823
Pile Weight	43	oz/yd^2	D5848
Primary Backing Weight	7+	oz/yd^2	D5848
Secondary Backing Weight (Finger-Unit)	14+	oz/yd^2	D5848
Total Carpet Weight	64	oz/yd^2	D5848
Stitch Gauge	3/4 inch centers		D5793
Tuft Bind	8+	lbs/force	D1335
Grab Tear Length	>200	lbs/force	D5034
Grab Tear Width	>200	lbs/force	D5034
Pill Burn Test	Pass		D2859
Impact Attenuation (Gmax)	<200	gmax	F1936
Water Permeability	>40	inch/hour	DIN 18-035
CoolPlay Infill	0.6	Lbs/ft2	
Cryogenic SBR Rubber Infill	1.6	Lbs/ft2	
Sand	6.2	Lbs/ft2	
Total Product Weight	1274	oz/yd^2	

Issue Date: 7/29/2020

Disclaimer: Variation of +/-5% on above listed property values is within normal manufacturing tolerances

PRODUCT TECHNICAL SPECIFICATION

CORE

Monofilament 2.5"

Property	Value	Units	ASTM
Product Stock Code	FTCORE-1		
Pile Yarn Type	UV-resistant polyethylene		n/a
Yarn Structure	Ridged Monofilament		n/a
Yarn Denier	14000	Denier	D1577
Tape Thickness	380	Microns	D3218
Pile Height	2.5	inches	D5823
Pile Weight	42	oz/yd^2	D5848
Primary Backing Weight (3-Layer)	8+	oz/yd^2	D5848
Secondary Backing Weight (Finger-Unit)	14+	oz/yd^2	D5848
Total Carpet Weight	64	oz/yd^2	D5848
Stitch Gauge	3/4 inch centers		D5793
Tuft Bind	8+	lbs/force	D1335
Grab Tear Length	>200	lbs/force	D5034
Grab Tear Width	>200	lbs/force	D5034
Pill Burn Test	Pass		D2859
Impact Attenuation (Gmax)	<200	gmax	F1936
Water Permeability	>40	inch/hour	DIN 18-035
Cryogenic SBR Rubber Infill	3	Lbs/ft2	
Sand	6.2	Lbs/ft2	
Total Product Weight	1389	oz/yd^2	

Variation of +/- 5% on above listed property values is within normal manufacturing tolerances

Issue Date: 6/9/17

PRODUCT TECHNICAL SPECIFICATION

CORE

Monofilament 2.25"

Property	Value	Units	ASTM
Product Stock Code	FTCORE-57		
Pile Yarn Type	UV-resistant polyethylene		n/a
Yarn Structure	Ridged Monofilament		n/a
Yarn Denier	14000	Denier	D1577
Tape Thickness	380	Microns	D3218
Pile Height	2.25	inches	D5823
Pile Weight	38	oz/yd^2	D5848
Primary Backing Weight (3-Layer)	8+	oz/yd^2	D5848
Secondary Backing Weight (Finger-Unit)	14+	oz/yd^2	D5848
Total Carpet Weight	60	oz/yd^2	D5848
Stitch Gauge	3/4 inch centers		D5793
Tuft Bind	8+	lbs/force	D1335
Grab Tear Length	>200	lbs/force	D5034
Grab Tear Width	>200	lbs/force	D5034
Pill Burn Test	Pass		D2859
Impact Attenuation (Gmax)	<200	gmax	F1936
Water Permeability	>40	inch/hour	DIN 18-035
Cryogenic SBR Rubber Infill	2.2	Lbs/ft2	
Sand	6.2	Lbs/ft2	
Total Product Weight	1270	oz/yd^2	

Variation of +/- 5% on above listed property values is within normal manufacturing tolerances

Issue Date: 6/9/17

PRODUCT TECHNICAL SPECIFICATION

CORE

Monofilament 2″

Property	Value	Units	ASTM
Product Stock Code	FTCORE-2		
Pile Yarn Type	UV-resistant polyethylene		n/a
Yarn Structure	Ridged Monofilament		n/a
Yarn Denier	14000	Denier	D1577
Tape Thickness	380	Microns	D3218
Pile Height	2	inches	D5823
Pile Weight	36	oz/yd^2	D5848
Primary Backing Weight (3-Layer)	8+	oz/yd^2	D5848
Secondary Backing Weight (Finger-Unit)	14+	oz/yd^2	D5848
Total Carpet Weight	58	oz/yd^2	D5848
Stitch Gauge	3/4 inch centers		D5793
Tuft Bind	8+	lbs/force	D1335
Grab Tear Length	>200	lbs/force	D5034
Grab Tear Width	>200	lbs/force	D5034
Pill Burn Test	Pass		D2859
Impact Attenuation (Gmax)	<200	gmax	F1936
Water Permeability	>40	inch/hour	DIN 18-035
Cryogenic SBR Rubber Infill	2.6	Lbs/ft2	
Sand	3.65	Lbs/ft2	
Total Product Weight	958	oz/yd^2	

Variation of +/- 5% on above listed property values is within normal manufacturing tolerances

Issue Date: 6/9/17

PRODUCT TECHNICAL SPECIFICATION

CORE CoolPlay

Monofilament 2.5"

Property	Value	Units	ASTM
Product Stock Code	FTCORE-1-CoolPlay		
Pile Yarn Type	UV-resistant polyethylene		n/a
Yarn Structure	Ridged Monofilament		n/a
Yarn Denier	14000	Denier	D1577
Tape Thickness	380	Microns	D3218
Pile Height	2.5	inches	D5823
Pile Weight	42	oz/yd^2	D5848
Primary Backing Weight (3-Layer)	8+	oz/yd^2	D5848
Secondary Backing Weight (Finger-Unit)	14+	oz/yd^2	D5848
Total Carpet Weight	64	oz/yd^2	D5848
Stitch Gauge	3/4 inch centers		D5793
Tuft Bind	8+	lbs/force	D1335
Grab Tear Length	>200	lbs/force	D5034
Grab Tear Width	>200	lbs/force	D5034
Pill Burn Test	Pass		D2859
Impact Attenuation (Gmax)	<200	gmax	F1936
Water Permeability	>40	inch/hour	DIN 18-035
CoolPlay Composite	0.6	Lbs/ft2	
Cryogenic SBR Rubber Infill	2.4	Lbs/ft2	
Sand	6.2	Lbs/ft2	
Total Product Weight	1389	oz/yd^2	

Variation of +/- 5% on above listed property values is within normal manufacturing tolerances

Issue Date: 10/30/17

PRODUCT TECHNICAL SPECIFICATION

CORE CoolPlay

Monofilament 2.25"

Property	Value	Units	ASTM
Product Stock Code	FTCORE -57 CoolPlay		
Pile Yarn Type	UV-resistant polyethylene		n/a
Yarn Structure	Ridged Monofilament		n/a
Yarn Denier	14000	Denier	D1577
Tape Thickness	380	Microns	D3218
Pile Height	2.25	inches	D5823
Pile Weight	38	oz/yd^2	D5848
Primary Backing Weight (3-Layer)	8+	oz/yd^2	D5848
Secondary Backing Weight (Finger-Unit)	14+	oz/yd^2	D5848
Total Carpet Weight	60	oz/yd^2	D5848
Stitch Gauge	3/4 inch centers		D5793
Tuft Bind	8+	lbs/force	D1335
Grab Tear Length	>200	lbs/force	D5034
Grab Tear Width	>200	lbs/force	D5034
Pill Burn Test	Pass		D2859
Impact Attenuation (Gmax)	<200	gmax	F1936
Water Permeability	>40	inch/hour	DIN 18-035
CoolPlay Composite	0.6	Lbs/ft2	
Cryogenic SBR Rubber Infill	1.6	Lbs/ft2	
Sand	6.2	Lbs/ft2	
Total Product Weight	1270	oz/yd^2	

Variation of +/- 5% on above listed property values is within normal manufacturing tolerances

Issue Date: 10/30/17

PRODUCT TECHNICAL SPECIFICATION

CORE CoolPlay

Monofilament 2.5"

Property	Value	Units	ASTM
Product Stock Code	FTCORE-1-CoolPlay		
Pile Yarn Type	UV-resistant polyethylene		n/a
Yarn Structure	Ridged Monofilament		n/a
Yarn Denier	14000	Denier	D1577
Tape Thickness	380	Microns	D3218
Pile Height	2.5	inches	D5823
Pile Weight	42	oz/yd^2	D5848
Primary Backing Weight (3-Layer)	8+	oz/yd^2	D5848
Secondary Backing Weight (Finger-Unit)	14+	oz/yd^2	D5848
Total Carpet Weight	64	oz/yd^2	D5848
Stitch Gauge	3/4 inch centers		D5793
Tuft Bind	8+	lbs/force	D1335
Grab Tear Length	>200	lbs/force	D5034
Grab Tear Width	>200	lbs/force	D5034
Pill Burn Test	Pass		D2859
Impact Attenuation (Gmax)	<200	gmax	F1936
Water Permeability	>40	inch/hour	DIN 18-035
CoolPlay Composite	0.6	Lbs/ft2	
Cryogenic SBR Rubber Infill	2.4	Lbs/ft2	
Sand	6.2	Lbs/ft2	
Total Product Weight	1389	oz/yd^2	

Variation of +/- 5% on above listed property values is within normal manufacturing tolerances

Issue Date: 10/30/17

PRODUCT TECHNICAL SPECIFICATION

CORE CoolPlay

Monofilament 2.25"

Property	Value	Units	ASTM
Product Stock Code	FTCORE -57 CoolPlay		
Pile Yarn Type	UV-resistant polyethylene		n/a
Yarn Structure	Ridged Monofilament		n/a
Yarn Denier	14000	Denier	D1577
Tape Thickness	380	Microns	D3218
Pile Height	2.25	inches	D5823
Pile Weight	38	oz/yd^2	D5848
Primary Backing Weight (3-Layer)	8+	oz/yd^2	D5848
Secondary Backing Weight (Finger-Unit)	14+	oz/yd^2	D5848
Total Carpet Weight	60	oz/yd^2	D5848
Stitch Gauge	3/4 inch centers		D5793
Tuft Bind	8+	lbs/force	D1335
Grab Tear Length	>200	lbs/force	D5034
Grab Tear Width	>200	lbs/force	D5034
Pill Burn Test	Pass		D2859
Impact Attenuation (Gmax)	<200	gmax	F1936
Water Permeability	>40	inch/hour	DIN 18-035
CoolPlay Composite	0.6	Lbs/ft2	
Cryogenic SBR Rubber Infill	1.6	Lbs/ft2	
Sand	6.2	Lbs/ft2	
Total Product Weight	1270	oz/yd^2	

Variation of +/- 5% on above listed property values is within normal manufacturing tolerances

Issue Date: 10/30/17

PRODUCT
TECHNICAL
SPECIFICATION

Revolution 360

Monofilament 2.5"

Property	Value	Units	ASTM
Product Stock Code	FTRV360-1		
Pile Yarn Type	UV-resistant polyethylene		n/a
Yarn Structure	Ridged Monofilament		n/a
Yarn Denier	14500	Denier	D1577
Tape Thickness	380	Microns	D3218
Pile Height	2.5	inches	D5823
Pile Weight	42	oz/yd^2	D5848
Primary Backing Weight	7+	oz/yd^2	D5848
Secondary Backing Weight (Finger-Unit)	14+	oz/yd^2	D5848
Total Carpet Weight	63	oz/yd^2	D5848
Stitch Gauge	3/4 inch centers		D5793
Tuft Bind	8+	lbs/force	D1335
Grab Tear Length	>200	lbs/force	D5034
Grab Tear Width	>200	lbs/force	D5034
Pill Burn Test	Pass		D2859
Impact Attenuation (Gmax)	<200	gmax	F1936
Water Permeability	>40	inch/hour	DIN 18-035
Cryogenic SBR Rubber Infill	3	Lbs/ft2	
Sand	6.2	Lbs/ft2	
Total Product Weight	1388	oz/yd^2	

Variation of +/- 5% on above listed property values is within normal manufacturing tolerances

Issue Date: 11/04/16

PRODUCT
TECHNICAL
SPECIFICATION

Revolution 360

Monofilament 2.25"

Property	Value	Units	ASTM
Product Stock Code	FTRV360-57		
Pile Yarn Type	UV-resistant polyethylene		n/a
Yarn Structure	Ridged Monofilament		n/a
Yarn Denier	14500	Denier	D1577
Tape Thickness	380	Microns	D3218
Pile Height	2.25	inches	D5823
Pile Weight	38	oz/yd^2	D5848
Primary Backing Weight	7+	oz/yd^2	D5848
Secondary Backing Weight (Finger-Unit)	14+	oz/yd^2	D5848
Total Carpet Weight	59	oz/yd^2	D5848
Stitch Gauge	3/4 inch centers		D5793
Tuft Bind	8+	lbs/force	D1335
Grab Tear Length	>200	lbs/force	D5034
Grab Tear Width	>200	lbs/force	D5034
Pill Burn Test	Pass		D2859
Impact Attenuation (Gmax)	<200	gmax	F1936
Water Permeability	>40	inch/hour	DIN 18-035
Cryogenic SBR Rubber Infill	2.2	Lbs/ft2	
Sand	6.2	Lbs/ft2	
Total Product Weight	1269	oz/yd^2	

Variation of +/- 5% on above listed property values is within normal manufacturing tolerances

Issue Date: 11/04/16

PRODUCT
TECHNICAL
SPECIFICATION

Revolution 360

Monofilament 2”

Property	Value	Units	ASTM
Product Stock Code	FTRV360-2		
Pile Yarn Type	UV-resistant polyethylene		n/a
Yarn Structure	Ridged Monofilament		n/a
Yarn Denier	14500	Denier	D1577
Tape Thickness	380	Microns	D3218
Pile Height	2	inches	D5823
Pile Weight	36	oz/yd^2	D5848
Primary Backing Weight	7+	oz/yd^2	D5848
Secondary Backing Weight (Finger-Unit)	14+	oz/yd^2	D5848
Total Carpet Weight	57	oz/yd^2	D5848
Stitch Gauge	3/4 inch centers		D5793
Tuft Bind	8+	lbs/force	D1335
Grab Tear Length	>200	lbs/force	D5034
Grab Tear Width	>200	lbs/force	D5034
Pill Burn Test	Pass		D2859
Impact Attenuation (Gmax)	<200	gmax	F1936
Water Permeability	>40	inch/hour	DIN 18-035
Cryogenic SBR Rubber Infill	2.6	Lbs/ft2	
Sand	3.65	Lbs/ft2	
Total Product Weight	957	oz/yd^2	

Variation of +/- 5% on above listed property values is within normal manufacturing tolerances

Issue Date: 12/30/16

PRODUCT
TECHNICAL
SPECIFICATION

Classic HD

Slit-Film 2.5”

Property	Value	Units	ASTM
Product Stock Code	FTHD-1		
Pile Yarn Type	UV-resistant polyethylene		n/a
Yarn Structure	Slit-Film		n/a
Yarn Denier	10800	Denier	D1577
Tape Thickness	130	Microns	D3218
Pile Height	2.5	inches	D5823
Pile Weight	36	oz/yd^2	D5848
Primary Backing Weight	7+	oz/yd^2	D5848
Secondary Backing Weight (Finger-Unit)	14+	oz/yd^2	D5848
Total Carpet Weight	57	oz/yd^2	D5848
Stitch Gauge	3/4 inch centers		D5793
Tuft Bind	8+	lbs/force	D1335
Grab Tear Length	>200	lbs/force	D5034
Grab Tear Width	>200	lbs/force	D5034
Pill Burn Test	Pass		D2859
Impact Attenuation (Gmax)	<200	gmax	F1936
Water Permeability	>40	inch/hour	DIN 18-035
Cryogenic SBR Rubber Infill	3	Lbs/ft2	
Sand	6.2	Lbs/ft2	
Total Product Weight	1382	oz/yd^2	

Variation of +/- 5% on above listed property values is within normal manufacturing tolerances

Issue Date: 11/04/16

PRODUCT
TECHNICAL
SPECIFICATION

Classic HD

Slit-Film 2.25"

Property	Value	Units	ASTM
Product Stock Code	FTHD-57		
Pile Yarn Type	UV-resistant polyethylene		n/a
Yarn Structure	Slit-Film		n/a
Yarn Denier	10800	Denier	D1577
Tape Thickness	130	Microns	D3218
Pile Height	2.25	inches	D5823
Pile Weight	33	oz/yd^2	D5848
Primary Backing Weight	7+	oz/yd^2	D5848
Secondary Backing Weight (Finger-Unit)	14+	oz/yd^2	D5848
Total Carpet Weight	54	oz/yd^2	D5848
Stitch Gauge	3/4 inch centers		D5793
Tuft Bind	8+	lbs/force	D1335
Grab Tear Length	>200	lbs/force	D5034
Grab Tear Width	>200	lbs/force	D5034
Pill Burn Test	Pass		D2859
Impact Attenuation (Gmax)	<200	gmax	F1936
Water Permeability	>40	inch/hour	DIN 18-035
Cryogenic SBR Rubber Infill	2.2	Lbs/ft2	
Sand	6.2	Lbs/ft2	
Total Product Weight	1264	oz/yd^2	

Variation of +/- 5% on above listed property values is within normal manufacturing tolerances

Issue Date: 11/04/16

PRODUCT
TECHNICAL
SPECIFICATION

Classic HD

Slit-Film 2"

Property	Value	Units	ASTM
Product Stock Code	FTHD-2		
Pile Yarn Type	UV-resistant polyethylene		n/a
Yarn Structure	Slit-Film		n/a
Yarn Denier	10800	Denier	D1577
Tape Thickness	130	Microns	D3218
Pile Height	2	inches	D5823
Pile Weight	30	oz/yd^2	D5848
Primary Backing Weight	7+	oz/yd^2	D5848
Secondary Backing Weight (Finger-Unit)	14+	oz/yd^2	D5848
Total Carpet Weight	51	oz/yd^2	D5848
Stitch Gauge	3/4 inch centers		D5793
Tuft Bind	8+	lbs/force	D1335
Grab Tear Length	>200	lbs/force	D5034
Grab Tear Width	>200	lbs/force	D5034
Pill Burn Test	Pass		D2859
Impact Attenuation (Gmax)	<200	gmax	F1936
Water Permeability	>40	inch/hour	DIN 18-035
Cryogenic SBR Rubber Infill	2.6	Lbs/ft2	
Sand	3.65	Lbs/ft2	
Total Product Weight	951	oz/yd^2	

Variation of +/- 5% on above listed property values is within normal manufacturing tolerances

Issue Date: 11/04/16

PRODUCT TECHNICAL SPECIFICATION

Classic HD CoolPlay

Slit-Film 2.5”

Property	Value	Units	ASTM
Product Stock Code	FTHD-1-CoolPlay		
Pile Yarn Type	UV-resistant polyethylene		n/a
Yarn Structure	Slit-Film		n/a
Yarn Denier	10800	Denier	D1577
Tape Thickness	130	Microns	D3218
Pile Height	2.5	inches	D5823
Pile Weight	36	oz/yd^2	D5848
Primary Backing Weight	7+	oz/yd^2	D5848
Secondary Backing Weight (Finger-Unit)	14+	oz/yd^2	D5848
Total Carpet Weight	57	oz/yd^2	D5848
Stitch Gauge	3/4 inch centers		D5793
Tuft Bind	8+	lbs/force	D1335
Grab Tear Length	>200	lbs/force	D5034
Grab Tear Width	>200	lbs/force	D5034
Pill Burn Test	Pass		D2859
Impact Attenuation (Gmax)	<200	gmax	F1936
Water Permeability	>40	inch/hour	DIN 18-035
CoolPlay Composite	0.6	Lbs/ft2	
Cryogenic SBR Rubber Infill	2.4	Lbs/ft2	
Sand	6.2	Lbs/ft2	
Total Product Weight	1382	oz/yd^2	

Variation of +/- 5% on above listed property values is within normal manufacturing tolerances

Issue Date: 9/8/17

PRODUCT TECHNICAL SPECIFICATION

Classic HD CoolPlay

Slit-Film 2”

Property	Value	Units	ASTM
Product Stock Code	FTHD-2-CoolPlay		
Pile Yarn Type	UV-resistant polyethylene		n/a
Yarn Structure	Slit-Film		n/a
Yarn Denier	10800	Denier	D1577
Tape Thickness	130	Microns	D3218
Pile Height	2	inches	D5823
Pile Weight	30	oz/yd^2	D5848
Primary Backing Weight	7+	oz/yd^2	D5848
Secondary Backing Weight (Finger-Unit)	14+	oz/yd^2	D5848
Total Carpet Weight	51	oz/yd^2	D5848
Stitch Gauge	3/4 inch centers		D5793
Tuft Bind	8+	lbs/force	D1335
Grab Tear Length	>200	lbs/force	D5034
Grab Tear Width	>200	lbs/force	D5034
Pill Burn Test	Pass		D2859
Impact Attenuation (Gmax)	<200	gmax	F1936
Water Permeability	>40	inch/hour	DIN 18-035
CoolPlay Composite	0.6	Lbs/ft2	
Cryogenic SBR Rubber Infill	2.0	Lbs/ft2	
Sand	3.65	Lbs/ft2	
Total Product Weight	951	oz/yd^2	

Variation of +/- 5% on above listed property values is within normal manufacturing tolerances

Issue Date: 9/8/17

PRODUCT TECHNICAL SPECIFICATION

Classic HD CoolPlay

Slit-Film 2.25"

Property	Value	Units	ASTM
Product Stock Code	FTHD-57-CoolPlay		
Pile Yarn Type	UV-resistant polyethylene		n/a
Yarn Structure	Slit-Film		n/a
Yarn Denier	10800	Denier	D1577
Tape Thickness	130	Microns	D3218
Pile Height	2.25	inches	D5823
Pile Weight	33	oz/yd^2	D5848
Primary Backing Weight	7+	oz/yd^2	D5848
Secondary Backing Weight (Finger-Unit)	14+	oz/yd^2	D5848
Total Carpet Weight	54	oz/yd^2	D5848
Stitch Gauge	3/4 inch centers		D5793
Tuft Bind	8+	lbs/force	D1335
Grab Tear Length	>200	lbs/force	D5034
Grab Tear Width	>200	lbs/force	D5034
Pill Burn Test	Pass		D2859
Impact Attenuation (Gmax)	<200	gmax	F1936
Water Permeability	>40	inch/hour	DIN 18-035
CoolPlay Composite	0.6	Lbs/ft2	
Cryogenic SBR Rubber Infill	1.6	Lbs/ft2	
Sand	6.2	Lbs/ft2	
Total Product Weight	1264	oz/yd^2	

Variation of +/- 5% on above listed property values is within normal manufacturing tolerances

Issue Date: 9/8/17

PRODUCT
TECHNICAL
SPECIFICATION

XM7

Monofilament 2.5"

Property	Value	Units	ASTM
Product Stock Code	XM7-65		
Pile Yarn Type	UV-resistant polyethylene		n/a
Yarn Structure	Ridged Monofilament		n/a
Yarn Denier	12000+	Denier	D1577
Tape Thickness	360	Microns	D3218
Pile Height	2.5	inches	D5823
Pile Weight	36	oz/yd^2	D5848
Primary Backing Weight	7+	oz/yd^2	D5848
Secondary Backing Weight (Perforated)	16+	oz/yd^2	D5848
Total Carpet Weight	59	oz/yd^2	D5848
Stitch Gauge	3/4 inch centers		D5793
Tuft Bind	8+	lbs/force	D1335
Grab Tear Length	>200	lbs/force	D5034
Grab Tear Width	>200	lbs/force	D5034
Pill Burn Test	Pass		D2859
Impact Attenuation (Gmax)	<200	gmax	F1936
Water Permeability	>40	inch/hour	DIN 18-035
SBR Rubber Infill	3.5	Lbs/ft2	
Sand	4	Lbs/ft2	
Total Product Weight	1139	oz/yd^2	

Variation of +/- 5% on above listed property values is within normal manufacturing tolerances

Issue Date: 9/12/17

PRODUCT TECHNICAL SPECIFICATION

XM7

Monofilament 2.25"

Property	Value	Units	ASTM
Product Stock Code	XM7-57		
Pile Yarn Type	UV-resistant polyethylene		n/a
Yarn Structure	Ridged Monofilament		n/a
Yarn Denier	12000+	Denier	D1577
Tape Thickness	360	Microns	D3218
Pile Height	2.25	inches	D5823
Pile Weight	33	oz/yd^2	D5848
Primary Backing Weight	7+	oz/yd^2	D5848
Secondary Backing Weight (Perforated)	16+	oz/yd^2	D5848
Total Carpet Weight	56	oz/yd^2	D5848
Stitch Gauge	3/4 inch centers		D5793
Tuft Bind	8+	lbs/force	D1335
Grab Tear Length	>200	lbs/force	D5034
Grab Tear Width	>200	lbs/force	D5034
Pill Burn Test	Pass		D2859
Impact Attenuation (Gmax)	<200	gmax	F1936
Water Permeability	>40	inch/hour	DIN 18-035
SBR Rubber Infill	3	Lbs/ft2	
Sand	3	Lbs/ft2	
Total Product Weight	920	oz/yd^2	

Variation of +/- 5% on above listed property values is within normal manufacturing tolerances

Issue Date: 9/12/17

PRODUCT TECHNICAL SPECIFICATION

XM7

Monofilament 2"

Property	Value	Units	ASTM
Product Stock Code	XM7-50		
Pile Yarn Type	UV-resistant polyethylene		n/a
Yarn Structure	Ridged Monofilament		n/a
Yarn Denier	12000+	Denier	D1577
Tape Thickness	360	Microns	D3218
Pile Height	2	inches	D5823
Pile Weight	30	oz/yd^2	D5848
Primary Backing Weight	7+	oz/yd^2	D5848
Secondary Backing Weight (Perforated)	16+	oz/yd^2	D5848
Total Carpet Weight	53	oz/yd^2	D5848
Stitch Gauge	3/4 inch centers		D5793
Tuft Bind	8+	lbs/force	D1335
Grab Tear Length	>200	lbs/force	D5034
Grab Tear Width	>200	lbs/force	D5034
Pill Burn Test	Pass		D2859
Impact Attenuation (Gmax)	<200	gmax	F1936
Water Permeability	>40	inch/hour	DIN 18-035
SBR Rubber Infill	3	Lbs/ft2	
Sand	2	Lbs/ft2	
Total Product Weight	773	oz/yd^2	

Variation of +/- 5% on above listed property values is within normal manufacturing tolerances

Issue Date: 9/12/17

PRODUCT
TECHNICAL
SPECIFICATION

XT

Slit-Film 2.5”

Property	Value	Units	ASTM
Product Stock Code	XT-65		
Pile Yarn Type	UV-resistant polyethylene		n/a
Yarn Structure	Slit-Film		n/a
Yarn Denier	10800	Denier	D1577
Tape Thickness	130	Microns	D3218
Pile Height	2.5	inches	D5823
Pile Weight	36	oz/yd^2	D5848
Primary Backing Weight	7+	oz/yd^2	D5848
Secondary Backing Weight (Perforated)	16+	oz/yd^2	D5848
Total Carpet Weight	59	oz/yd^2	D5848
Stitch Gauge	3/4 inch centers		D5793
Tuft Bind	8+	lbs/force	D1335
Grab Tear Length	>200	lbs/force	D5034
Grab Tear Width	>200	lbs/force	D5034
Pill Burn Test	Pass		D2859
Impact Attenuation (Gmax)	<200	gmax	F1936
Water Permeability	>40	inch/hour	DIN 18-035
SBR Rubber Infill	3.5	Lbs/ft2	
Sand	4	Lbs/ft2	
Total Product Weight	1139	oz/yd^2	

Variation of +/- 5% on above listed property values is within normal manufacturing tolerances

Issue Date: 11/04/16

PRODUCT
TECHNICAL
SPECIFICATION

XT

Slit-Film 2.25"

Property	Value	Units	ASTM
Product Stock Code	XT-57		
Pile Yarn Type	UV-resistant polyethylene		n/a
Yarn Structure	Slit-Film		n/a
Yarn Denier	10800	Denier	D1577
Tape Thickness	130	Microns	D3218
Pile Height	2.25	inches	D5823
Pile Weight	33	oz/yd^2	D5848
Primary Backing Weight	7+	oz/yd^2	D5848
Secondary Backing Weight (Perforated)	16+	oz/yd^2	D5848
Total Carpet Weight	56	oz/yd^2	D5848
Stitch Gauge	3/4 inch centers		D5793
Tuft Bind	8+	lbs/force	D1335
Grab Tear Length	>200	lbs/force	D5034
Grab Tear Width	>200	lbs/force	D5034
Pill Burn Test	Pass		D2859
Impact Attenuation (Gmax)	<200	gmax	F1936
Water Permeability	>40	inch/hour	DIN 18-035
SBR Rubber Infill	3	Lbs/ft2	
Sand	3	Lbs/ft2	
Total Product Weight	920	oz/yd^2	

Variation of +/- 5% on above listed property values is within normal manufacturing tolerances

Issue Date: 11/04/16

PRODUCT
TECHNICAL
SPECIFICATION

XT

Slit-Film 2”

Property	Value	Units	ASTM
Product Stock Code	XT-50		
Pile Yarn Type	UV-resistant polyethylene		n/a
Yarn Structure	Slit-Film		n/a
Yarn Denier	10800	Denier	D1577
Tape Thickness	130	Microns	D3218
Pile Height	2	inches	D5823
Pile Weight	30	oz/yd^2	D5848
Primary Backing Weight	7+	oz/yd^2	D5848
Secondary Backing Weight (Perforated)	16+	oz/yd^2	D5848
Total Carpet Weight	53	oz/yd^2	D5848
Stitch Gauge	3/4 inch centers		D5793
Tuft Bind	8+	lbs/force	D1335
Grab Tear Length	>200	lbs/force	D5034
Grab Tear Width	>200	lbs/force	D5034
Pill Burn Test	Pass		D2859
Impact Attenuation (Gmax)	<200	gmax	F1936
Water Permeability	>40	inch/hour	DIN 18-035
SBR Rubber Infill	3	Lbs/ft2	
Sand	2	Lbs/ft2	
Total Product Weight	773	oz/yd^2	

Variation of +/- 5% on above listed property values is within normal manufacturing tolerances

Issue Date: 11/04/16

PRODUCT TECHNICAL SPECIFICATION

Vertex Prime

Monofilament/Slit-Film 2.5"

Property	Value	Units	ASTM
Product Stock Code	FTVTP-1		
Pile Yarn Type	UV-resistant polyethylene		n/a
Yarn Structure 1	Ridged Monofilament		n/a
Yarn Denier 1	12000+	Denier	D1577
Tape Thickness 1	360+	Microns	
Yarn Structure 2	Slit-Film		
Yarn Denier 2	5000	Denier	D1577
Tape Thickness 2	120+	Microns	
Pile Height	2.5	inches	D5823
Pile Weight	47	oz/yd^2	D5848
Primary Backing Weight	7+	oz/yd^2	D5848
Secondary Backing Weight (Finger-Unit)	14+	oz/yd^2	D5848
Total Carpet Weight	68	oz/yd^2	D5848
Stitch Gauge	3/4 inch centers		D5793
Tuft Bind	8+	lbs/force	D1335
Grab Tear Length	>200	lbs/force	D5034
Grab Tear Width	>200	lbs/force	D5034
Pill Burn Test	Pass		D2859
Impact Attenuation (Gmax)	<200	gmax	F1936
Water Permeability	>40	inch/hour	DIN 18-035
Cryogenic SBR Rubber Infill	3	Lbs/ft2	
Sand	6.2	Lbs/ft2	
Total Product Weight	1393	oz/yd^2	

Variation of +/- 5% on above listed property values is within normal manufacturing tolerances

Issue Date: 9/12/17

PRODUCT TECHNICAL SPECIFICATION

Vertex Prime

Monofilament/Slit-Film 2.25"

Property	Value	Units	ASTM
Product Stock Code	FTVTP-57		
Pile Yarn Type	UV-resistant polyethylene		n/a
Yarn Structure 1	Ridged Monofilament		n/a
Yarn Denier 1	12000+	Denier	D1577
Tape Thickness 1	360+	Microns	
Yarn Structure 2	Slit-Film		
Yarn Denier 2	5000	Denier	D1577
Tape Thickness 2	120+	Microns	
Pile Height	2.25	inches	D5823
Pile Weight	43	oz/yd^2	D5848
Primary Backing Weight	7+	oz/yd^2	D5848
Secondary Backing Weight (Finger-Unit)	14+	oz/yd^2	D5848
Total Carpet Weight	64	oz/yd^2	D5848
Stitch Gauge	3/4 inch centers		D5793
Tuft Bind	8+	lbs/force	D1335
Grab Tear Length	>200	lbs/force	D5034
Grab Tear Width	>200	lbs/force	D5034
Pill Burn Test	Pass		D2859
Impact Attenuation (Gmax)	<200	gmax	F1936
Water Permeability	>40	inch/hour	DIN 18-035
Cryogenic SBR Rubber Infill	2.2	Lbs/ft2	
Sand	6.2	Lbs/ft2	
Total Product Weight	1274	oz/yd^2	

Variation of +/- 5% on above listed property values is within normal manufacturing tolerances

Issue Date: 9/12/17

PRODUCT TECHNICAL SPECIFICATION

Vertex Prime

Monofilament/Slit-Film 2"

Property	Value	Units	ASTM
Product Stock Code	FTVTP-2		
Pile Yarn Type	UV-resistant polyethylene		n/a
Yarn Structure 1	Ridged Monofilament		n/a
Yarn Denier 1	12000+	Denier	D1577
Tape Thickness 1	360+	Microns	
Yarn Structure 2	Slit-Film		
Yarn Denier 2	5000	Denier	D1577
Tape Thickness 2	120+	Microns	
Pile Height	2	inches	D5823
Pile Weight	39	oz/yd^2	D5848
Primary Backing Weight	7+	oz/yd^2	D5848
Secondary Backing Weight (Finger-Unit)	14+	oz/yd^2	D5848
Total Carpet Weight	60	oz/yd^2	D5848
Stitch Gauge	3/4 inch centers		D5793
Tuft Bind	8+	lbs/force	D1335
Grab Tear Length	>200	lbs/force	D5034
Grab Tear Width	>200	lbs/force	D5034
Pill Burn Test	Pass		D2859
Impact Attenuation (Gmax)	<200	gmax	F1936
Water Permeability	>40	inch/hour	DIN 18-035
Cryogenic SBR Rubber Infill	2.6	Lbs/ft2	
Sand	3.65	Lbs/ft2	
Total Product Weight	960	oz/yd^2	

Variation of +/- 5% on above listed property values is within normal manufacturing tolerances

Issue Date: 9/12/17

PRODUCT
TECHNICAL
SPECIFICATION

Vertex

Monofilament/Slit-Film 2.5"

Property	Value	Units	ASTM
Product Stock Code	FTVT-65		
Pile Yarn Type	UV-resistant polyethylene		n/a
Yarn Structure 1	Ridged Monofilament		n/a
Yarn Denier 1	12000+	Denier	D1577
Tape Thickness 1	360+	Microns	
Yarn Structure 2	Slit-Film		
Yarn Denier 2	5000	Denier	D1577
Tape Thickness 2	120+	Microns	
Pile Height	2.5	inches	D5823
Pile Weight	47	oz/yd^2	D5848
Primary Backing Weight	7+	oz/yd^2	D5848
Secondary Backing Weight (Perforated)	16+	oz/yd^2	D5848
Total Carpet Weight	70	oz/yd^2	D5848
Stitch Gauge	3/4 inch centers		D5793
Tuft Bind	8+	lbs/force	D1335
Grab Tear Length	>200	lbs/force	D5034
Grab Tear Width	>200	lbs/force	D5034
Pill Burn Test	Pass		D2859
Impact Attenuation (Gmax)	<200	gmax	F1936
Water Permeability	>40	inch/hour	DIN 18-035
SBR Rubber Infill	3.5	Lbs/ft2	
Sand	4	Lbs/ft2	
Total Product Weight	1150	oz/yd^2	

Variation of +/- 5% on above listed property values is within normal manufacturing tolerances

Issue Date: 9/12/17

PRODUCT
TECHNICAL
SPECIFICATION

Vertex

Monofilament/Slit-Film 2.25"

Property	Value	Units	ASTM
Product Stock Code	FTVT-57		
Pile Yarn Type	UV-resistant polyethylene		n/a
Yarn Structure 1	Ridged Monofilament		n/a
Yarn Denier 1	12000+	Denier	D1577
Tape Thickness 1	360+	Microns	
Yarn Structure 2	Slit-Film		
Yarn Denier 2	5000	Denier	D1577
Tape Thickness 2	120+	Microns	
Pile Height	2.25	inches	D5823
Pile Weight	43	oz/yd^2	D5848
Primary Backing Weight	7+	oz/yd^2	D5848
Secondary Backing Weight (Perforated)	16+	oz/yd^2	D5848
Total Carpet Weight	66	oz/yd^2	D5848
Stitch Gauge	3/4 inch centers		D5793
Tuft Bind	8+	lbs/force	D1335
Grab Tear Length	>200	lbs/force	D5034
Grab Tear Width	>200	lbs/force	D5034
Pill Burn Test	Pass		D2859
Impact Attenuation (Gmax)	<200	gmax	F1936
Water Permeability	>40	inch/hour	DIN 18-035
SBR Rubber Infill	3	Lbs/ft2	
Sand	3	Lbs/ft2	
Total Product Weight	930	oz/yd^2	

Variation of +/- 5% on above listed property values is within normal manufacturing tolerances

Issue Date: 9/12/17

PRODUCT
TECHNICAL
SPECIFICATION

Vertex

Monofilament/Slit-Film 2"

Property	Value	Units	ASTM
Product Stock Code	FTVT-50		
Pile Yarn Type	UV-resistant polyethylene		n/a
Yarn Structure 1	Ridged Monofilament		n/a
Yarn Denier 1	12000+	Denier	D1577
Tape Thickness 1	360+	Microns	
Yarn Structure 2	Slit-Film		
Yarn Denier 2	5000	Denier	D1577
Tape Thickness 2	120+	Microns	
Pile Height	2	inches	D5823
Pile Weight	39	oz/yd^2	D5848
Primary Backing Weight	7+	oz/yd^2	D5848
Secondary Backing Weight (Perforated)	16+	oz/yd^2	D5848
Total Carpet Weight	62	oz/yd^2	D5848
Stitch Gauge	3/4 inch centers		D5793
Tuft Bind	8+	lbs/force	D1335
Grab Tear Length	>200	lbs/force	D5034
Grab Tear Width	>200	lbs/force	D5034
Pill Burn Test	Pass		D2859
Impact Attenuation (Gmax)	<200	gmax	F1936
Water Permeability	>40	inch/hour	DIN 18-035
SBR Rubber Infill	3	Lbs/ft2	
Sand	2	Lbs/ft2	
Total Product Weight	782	oz/yd^2	

Variation of +/- 5% on above listed property values is within normal manufacturing tolerances

Issue Date: 9/12/17

PRODUCT TECHNICAL SPECIFICATION

Hockey Speed

Property	Value	Units	ASTM
Product Stock Code	Hockey Speed		
Pile Yarn Type	Nylon		n/a
Yarn Denier	4400	Denier	D1577
Pile Height	0.5	inches	D5823
Pile Weight	50	oz/yd^2	D5848
Primary Backing Weight	7	oz/yd^2	D5848
Secondary Backing Weight	20	oz/yd^2	D5848
Total Weight	77	oz/yd^2	D5848
Tuft Bind	8+	lbs/force	D1335
Stitch Gauge	3/16 inch centers		
Grab Tear Length	>200	lbs/force	D5034
Grab Tear Width	>200	lbs/force	D5034
Pill Burn Test	Pass		
Impact Attenuation (Gmax)	<200	Gmax	F1936

Variation of +/- 5% on properties listed above is within normal manufacturing tolerances
A separate shockpad is necessary under this system. Ask us for details.

Issue Date: 11/04/16

PRODUCT TECHNICAL SPECIFICATION

Hockey Gold

Property	Value	Units	ASTM
Product Stock Code	Hockey Gold WB		
Tufting Pattern	Straight		
Pile Yarn Type	Polyethylene		n/a
Green Yarn Color	Field Green		
Yarn Denier	7200	Denier	D1577
Pile Height	0.5	inches	D5823
Pile Weight	50	oz/yd^2	D5848
Primary Backing Weight	9	oz/yd^2	D5848
Secondary Backing Weight (Latex)	35	oz/yd^2	D5848
Total Weight	94	oz/yd^2	D5848
Tuft Bind	8+	lbs/force	D1335
Stitch Gauge	3/16 inch centers		
Grab Tear Length	>200	lbs/force	D5034
Grab Tear Width	>200	lbs/force	D5034
Pill Burn Test	Pass		
Impact Attenuation (Gmax)	<200	Gmax	F1936

Variation of +/- 5% on properties listed above is within normal manufacturing tolerances
A separate shockpad is necessary under this system. Ask us for details.

Issue Date: 11/04/16

PRODUCT
TECHNICAL
SPECIFICATION

Hockey Multi

Property	Value	Units	ASTM
Product Stock Code	Hockey Multi		
Pile Yarn Type	UV-resistant polyethylene		n/a
Yarn Structure	Slit-Film and Texturized		n/a
Slit-Film Yarn Denier	10800	Denier	D1577
Texturized Yarn Denier	5000	Denier	D1577
Pile Height	1	inches	D5823
Pile Weight	62	oz/yd^2	D5848
Primary Backing Weight	7+	oz/yd^2	D5848
Secondary Backing Weight	20+	oz/yd^2	D5848
Total Weight	89	oz/yd^2	D5848
Stitch Gauge	3/8 inch centers		D5793
Tuft Bind	8+	lbs/force	D1335
Grab Tear Length	>200	lbs/force	D5034
Grab Tear Width	>200	lbs/force	D5034
Pill Burn Test	Pass		D2859
Impact Attenuation (Gmax)	<200	gmax	F1936
Water Permeability	>40	inch/hour	DIN 18-035
Sand	4.5	Lbs/ft2	

Variation of +/- 5% on above listed property values is within normal manufacturing tolerances
A separate shockpad is necessary under this system. Ask us for details.

Issue Date: 4/17/18

PRODUCT TECHNICAL SPECIFICATION

FieldTurf EasyField

SYNTHETIC TURF COMPONENT

Property	Value	Units	ASTM
Pile Yarn Type	UV-resistant polyethylene		n/a
Yarn Structure	Slit-Film/Texturized		n/a
Yarn Denier	5000/5000/7500	Denier	D1577
Pile Height	1.125	inches	D5823
Pile Weight	72	oz/yd^2	D5848
Primary Backing Weight	7	oz/yd^2	D5848
Secondary Backing Weight	20	oz/yd^2	D5848
Total Weight	99	oz/yd^2	D5848
Stitch Gauge	1/4 inch centers		D5793
Tuft Bind	8+	lbs/force	D1335
Impact Attenuation (Gmax)	<200 (with shockpad)	gmax	F1936

Variation of +/- 5% on above listed property values is within normal manufacturing tolerances

INTERLOCKING SHOCKPAD COMPONENT

Property	Value	Units	ASTM
Density	2.8	Lb/ft3	D3575
Dimensions (Turf Area)	3.44ft X 5.17ft	Ft	
Weight – Pad and Turf	21	lbs	
Pad Thickness	45	mm	D3575
Compressive Strength @ 25%	42	Psi	D3575
Compressive Strength @ 50%	54	Psi	D3575
Compressive Strength @ 75%	111	Psi	D3575
Tensile Strength	67	Psi	D3575
Tensile Elongation	16	%	D3575
Tear Strength	16	Lbs/in	D3575
Compressive Set @ 25%	7	%	D3575
Compressive Set @ 50%	12	%	D3575
Thermal Conductivity	0.26	(K) BTU-in/ft2-hr-F	C177
Thermal Stability	<1.0	%	D3575
Coefficient of Linear Thermal Expansion	5.4		D3575
Service Temperature	212	F (Max)	D3575
Water Absorption	<0.01	Lb/ft2	D3575
Compressive Creep	<1.5	1000hr, % (at 2psi)	D3575
Flammability	Meets	<4.0 in/min	FMVSS-302

FieldTurf® | Genius
A Tarkett Sports Company

THE WORLD'S FIRST SMART SPORTS FIELD

Genius

YOUR FIELD IS ONE TOUCH AWAY

Imagine a sports field that could automatically track the number of athletes playing, hours of use and send maintenance alerts when needed. Imagine that it could then deliver in-depth reporting on executed maintenance and usage, allowing you to optimize scheduling, utilization and care.

THE FUTURE HAS ARRIVED. INTRODUCING FIELDTURF GENIUS, POWERED BY INTELLIGENT PLAY.

The world's first smart sports field.

- **EASY MAINTENANCE MANAGEMENT & SCHEDULING**
- **OPTIMIZED FACILITY USAGE**
- **HELPS IMPROVE PERFORMANCE, SAFETY & LONGEVITY**
- **IN-DEPTH RECORD MANAGEMENT**

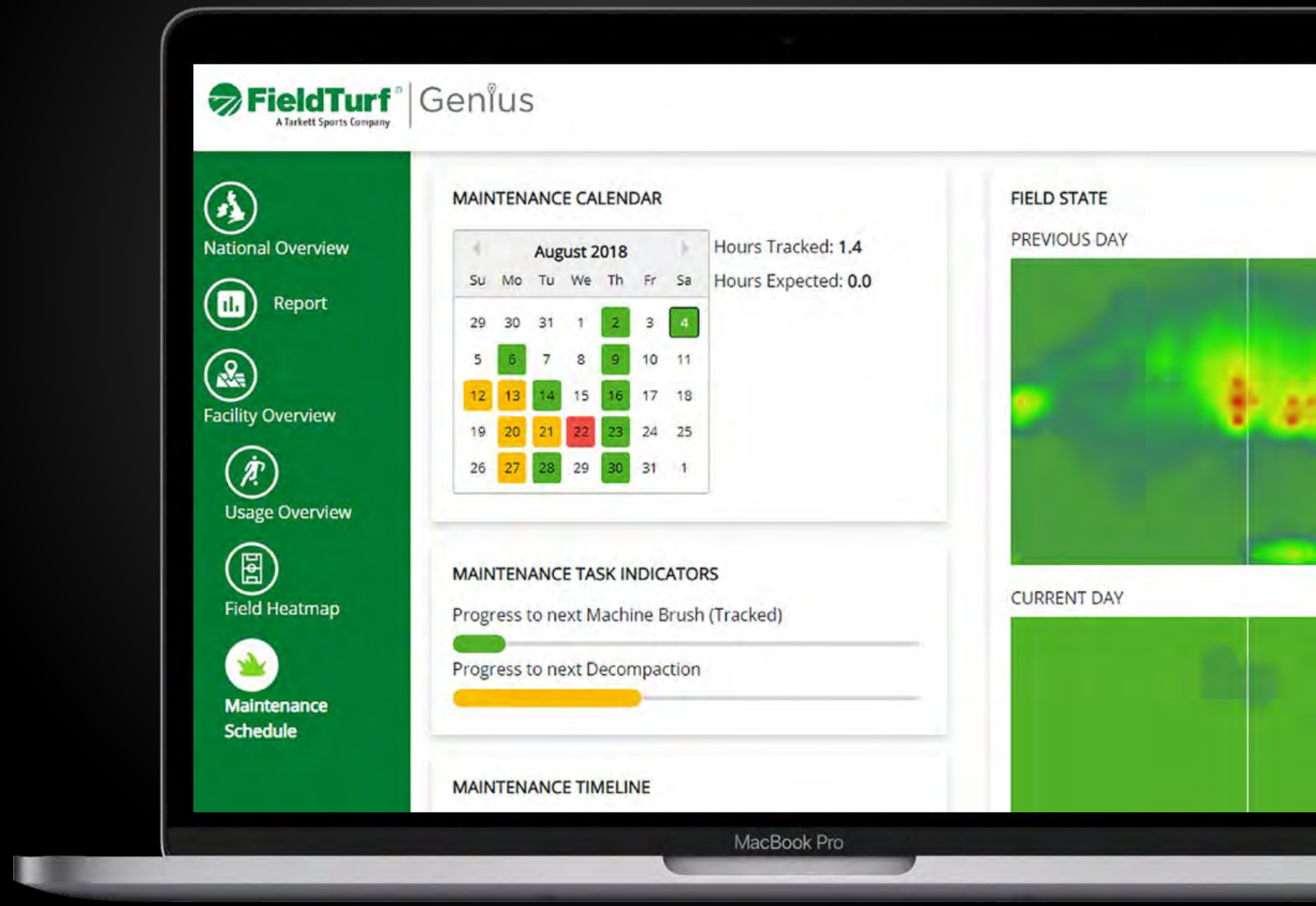

GAME-CHANGING TECHNOLOGY TO CONNECT WITH YOUR FIELD

FIELD LONGEVITY

An intelligently maintained surface can significantly contribute to extended product life. Prolonged usage allows for a greater return on investment.

SAFETY & PERFORMANCE

A properly maintained surface allows for more consistent planarity and proper infill levels, which can contribute to improved player safety and performance.

EASY MAINTENANCE

The automated maintenance alerts and live dashboard eliminate forms and human input. The system does the planning and enables you to track and monitor service, all from your desk.

INCREASED REVENUE

The advanced reporting allows you to track usage, optimize field scheduling, increase the possibility of rentals and improves facility management.

LIVE MONITORING

FieldTurf Genius allows you to have eyes on your field at all times. Know when, where, how long and how many athletes are using your field.

POWERING THE MISSING LINK

HOW DOES IT WORK?

THE SENSORS

Two sensors are mounted to the facility lights or stadium press box and automatically process and convert the recordings into anonymous data for analysis. Through advanced computer vision and deep learning algorithms, live field participation is translated into tangible data.

THE MONITORING

The system monitors all on-field activity and translates it into Equivalent Usage Hours (EUH)

22 PLAYERS PLAYING FOR 1 HOUR = 1 EUH
11 PLAYERS PLAYING FOR 1 HOUR = 0.5 EUH

By determining a quantifiable usage amount, proper maintenance and usage recommendations can be made. Live monitoring allows for accurate recommendations.

THE MAINTENANCE ALERTS

When your field reaches certain milestones, a maintenance alert is issued indicating the needed service: brushing, aerating, raking or sweeping. After the maintenance is completed, an updated heatmap allows you to track the efficiency of the session. A calendar and tracker help your team plan and ensure your field receives the proper care based on its true usage.

NO MORE FORMS. NO HUMAN INPUT.

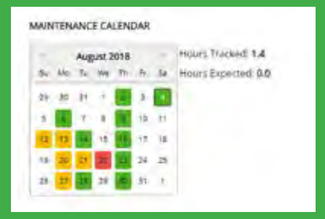

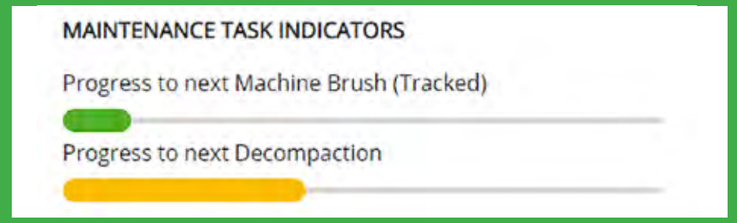

THE DASHBOARD

Using the online dashboard, advanced facility reporting is at your fingertips. Easily access field usage history, trends, planned and executed maintenance sessions and detailed heatmaps. Manage and compare multiple facilities using one platform from any device, from any location.

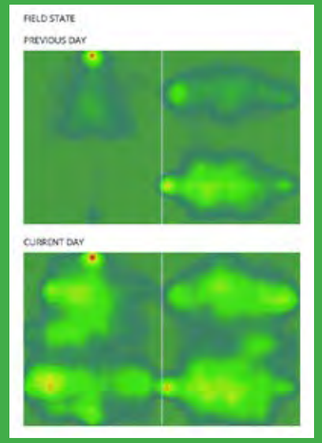

MAINTENANCE HUB

Using the live heatmap, you can easily identify areas of high use to help properly maintain and care for your surface.

USAGE HUB

Quickly access and sort field usage by quarters, thirds or halves to help balance utilization.

ADVANCED FACILITY REPORTING

Generate advanced reports integrating weekly or monthly averages and custom date ranges to gain in-depth knowledge on your facility. The tool can help identify areas for additional rental and aid justify investment.

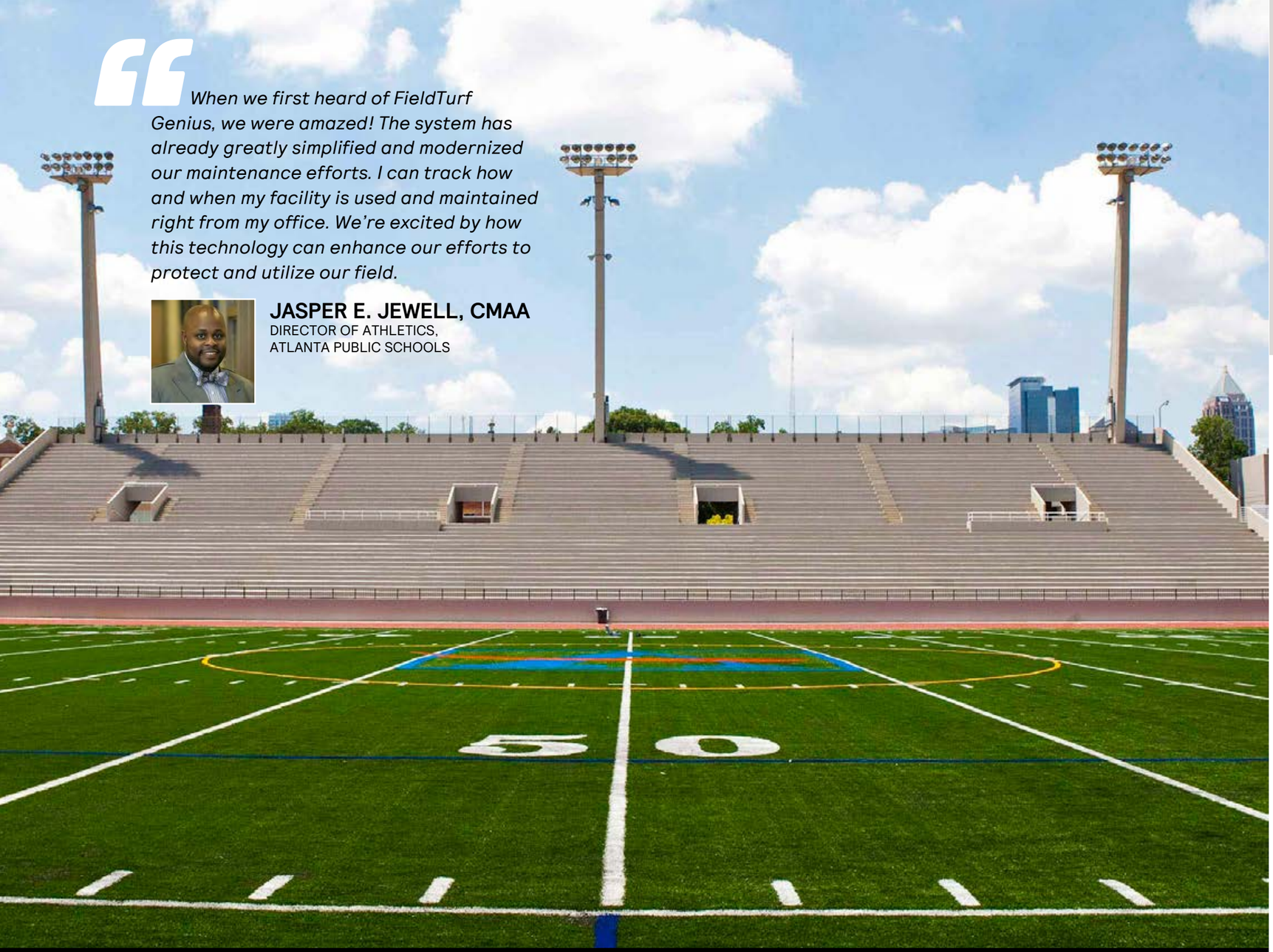

When we first heard of FieldTurf Genius, we were amazed! The system has already greatly simplified and modernized our maintenance efforts. I can track how and when my facility is used and maintained right from my office. We're excited by how this technology can enhance our efforts to protect and utilize our field.

JASPER E. JEWELL, CMAA
DIRECTOR OF ATHLETICS,
ATLANTA PUBLIC SCHOOLS

Intelligent Play. Installed at:

LET'S GET STARTED WITH OUR MOST FREQUENT QUESTIONS

DOES FIELDTURF GENIUS USE FACIAL RECOGNITION TECHNOLOGY?

NO. Our sensors record in low-resolution from far and elevated positions making facial recognition impossible. The recordings are automatically processed and converted into anonymous data, then discarded.

CAN I USE FIELDTURF GENIUS AS A SECURITY CAMERA?

NO. BUT IT CAN ALERT YOU. Our sensors record in low-resolution from far and elevated positions, making facial recognition impossible. An alert can be programmed to advise you of off-hour usage to help protect from unauthorized use and vandalism.

CAN FIELDTURF GENIUS BE INSTALLED ON EVERY FIELD?

YES. Pending the approval of the site suitability assessment, the system is easily installed. FieldTurf Genius requires only a low voltage power supply and two mount points (one per sensor), typically on the facility lights or stadium press box. Installation is normally completed in less than a day.

HOW IS THE DATA TRANSFERRED / COMMUNICATED?

The system is connected to the network via a 3G/4G connection, which updates remotely for the life of the unit. In cases where 3G/4G connectivity is an issue, a WIFI connection can be established to run the unit.

POWERED BY

THE TARKETT SPORTS FAMILY – LEADERS IN SPORTS SURFACING

800-724-2969 | info@fieldturf.com | fieldturf.com

1 FIELD INSPECTION

To start, FieldTurf experts perform a full facility inspection to warrant that your surface meets the Re-Cover qualifications. Ensuring proper drainage, planarity and curb design is key to preparing your field for Re-Cover. An initial site visit is conducted by a FIeldTurf technician for pre-approval and a second visit is conducted by an independent laboratory to ensure that the field is fit for Re-Cover.

2 EXISTING FIELD IS LEVELED

To allow for consistent footing, ball-to-surface interaction and performance on Re-Cover, the existing field is carefully leveled to ensure planarity. A surfactant is then applied to the existing infill to lower surface tension and aid in reducing long-term compaction.

3 NEW FIELD IS LAID

Once the existing surface is prepared, the new field is installed following the same procedure as a standard installation.

4 EDGING IS ADJUSTED

To ensure your Re-Cover field meets with your curb correctly, the infill of the existing field is tapered to allow for a natural slope. Then the Re-Cover carpet is attached to the nailer board and infilled completing the edging adjustment.

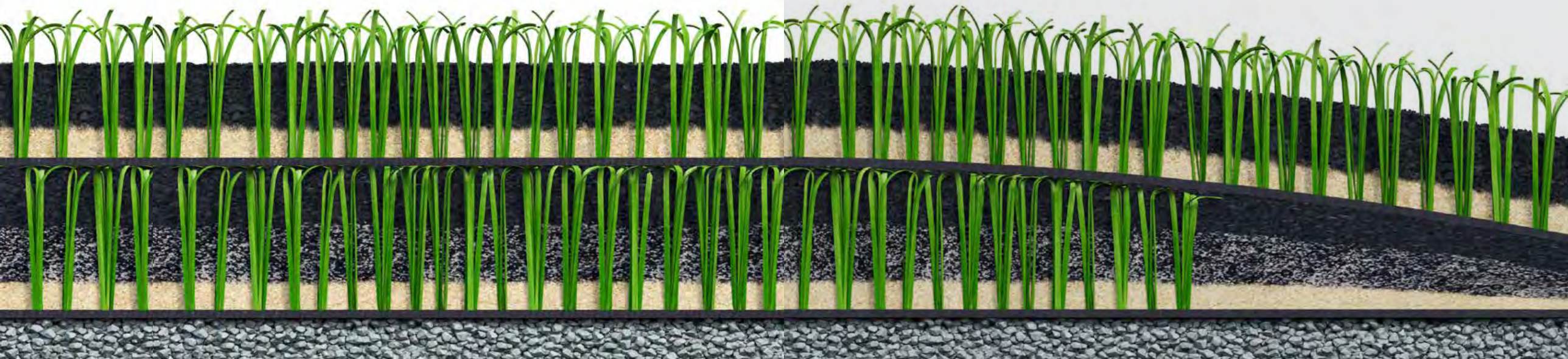

PRODUCT
TECHNICAL
SPECIFICATION

DoublePlay

Property	Value	Units	ASTM
Product Stock Code	FTHD-45-DoublePlay		
Pile Yarn Type	UV-resistant polyethylene		n/a
Yarn Structure	Slit-Film		n/a
Yarn Denier	10800	Denier	D1577
Tape Thickness	130	Microns	D3218
Pile Height	1.75	inches	D5823
Pile Weight	30	oz/yd^2	D5848
Primary Backing Weight	7+	oz/yd^2	D5848
Secondary Backing Weight	14+	oz/yd^2	D5848
Total Weight	51	oz/yd^2	D5848
Stitch Gauge	3/4 inch centers		D5793
Tuft Bind	8+	lbs/force	D1335
Grab Tear Length	>200	lbs/force	D5034
Grab Tear Width	>200	lbs/force	D5034
Pill Burn Test	Pass		D2859
Water Permeability	>40	inch/hour	DIN 18-035
SBR Rubber	1.5	Lbs/ft2	
Silica Sand	5.4	Lbs/ft2	
Total Product Weight	1045	oz/yd^2	

Variation of +/- 5% on above listed property values is within normal manufacturing tolerances

Issue Date: 12/11/17

PRODUCT
TECHNICAL
SPECIFICATION

DoublePlay

Property	Value	Units	ASTM
Product Stock Code	XT-45-DoublePlay		
Pile Yarn Type	UV-resistant polyethylene		n/a
Yarn Structure	Slit-Film		n/a
Yarn Denier	10800	Denier	D1577
Tape Thickness	130	Microns	D3218
Pile Height	1.75	inches	D5823
Pile Weight	30	oz/yd^2	D5848
Primary Backing Weight	7+	oz/yd^2	D5848
Secondary Backing Weight (perforated)	16+	oz/yd^2	D5848
Total Weight	53	oz/yd^2	D5848
Stitch Gauge	3/4 inch centers		D5793
Tuft Bind	8+	lbs/force	D1335
Grab Tear Length	>200	lbs/force	D5034
Grab Tear Width	>200	lbs/force	D5034
Pill Burn Test	Pass		D2859
Water Permeability	>40	inch/hour	DIN 18-035
SBR Rubber	1.5	Lbs/ft2	
Silica Sand	5.4	Lbs/ft2	
Total Product Weight	1047	oz/yd^2	

Variation of +/- 5% on above listed property values is within normal manufacturing tolerances

Issue Date: 12/11/17

FieldTurf®
A Tarkett Sports Company

CHANGE THE *Game*

REDEFINE

HOME FIELD *Advantage*

Our goal was simple… design an artificial turf baseball system that replicates the best ballparks in America. But like every road to greatness, creating the perfect surface took time and patience.

We started by testing and analyzing the nation's elite clay, grass and turf facilities to study ball surface interaction, speed and consistency. Then designed our new series to emulate the best results.

Our journey rewrote the book on testing and product development. Introducing our new baseball line, DoublePlay Speed and DoublePlay Natural.

IF YOU SWING, MAKE IT COUNT.

"Man, this stuff is good. I believe that playing on our FieldTurf field has helped in terms of getting our guys used to consistent play and focusing on making plays. It has been a contributor to our success and has helped Oregon State Baseball strive to reach the next level."

PAT CASEY
OREGON STATE BEAVERS

TECHNOLOGY FUELED OUR PURSUIT OF EXCELLENCE

Our journey had us push the boundaries of testing and product innovation like never before. We used science to analyze ball-surface interaction on a variety of systems and through the use of advanced high tech motion video cameras, we were able to translate it in real-life data. Never before has there been a way to build your FieldTurf baseball field with such precision.

THE RESULT? USING OUR THREE CRITICAL PERFORMANCE CRITERIA: SPEED, LINE & BOUNCE – YOU CAN BUILD YOUR FIELD TO PLAY FAST OR PLAY LIKE A NATURAL SURFACE.

1 SPEED

Speed is a total average of the ball speed-in and ball speed-out at the bounce points. Measured in feet per second.

WHY IS THIS IMPORTANT?
The SPEED rating allows you to select a system that either plays fast or plays like a natural surface.

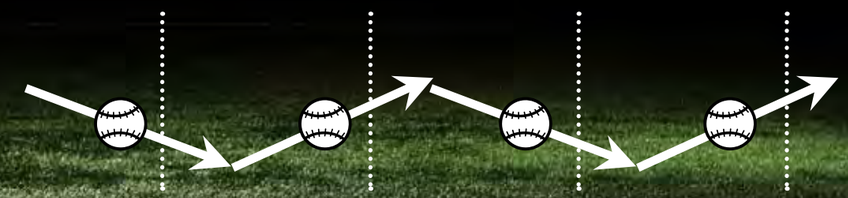

2 LINE

Line is a total average of the ball bounce straightness variation. Measured in degrees.

WHY IS THIS IMPORTANT?
The LINE rating indicates if the hop plays true.

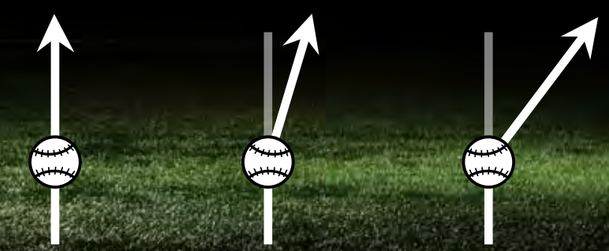

3 BOUNCE

Bounce height is a total average of the max height obtained at the bounce points. Measured in feet.

WHY IS THIS IMPORTANT?
The BOUNCE rating indicates if the ball plays like a natural surface

WHICH SYSTEM IS RIGHT FOR YOU?

DOUBLEPLAY *Speed*

PLAYS: FAST

INFIELD

SPEED

CLAY	FIELDTURF	COMPETITION
42.4 FT/S FEET PER SECOND	45.5 FT/S FEET PER SECOND	45.5 FT/S FEET PER SECOND

STRAIGHTNESS

CLAY	FIELDTURF	COMPETITION
3.6°	6.4°	11.5°

BOUNCE

COMPETITION	3.2 ft
FIELDTURF	2.5 ft
CLAY	2.4 ft

OUTFIELD

SPEED

GRASS	FIELDTURF
35.4 FT/S FEET PER SECOND	42.6 FT/S FEET PER SECOND

STRAIGHTNESS

GRASS	FIELDTURF
2.6°	3.2°

BOUNCE

FIELDTURF	2.3 ft
GRASS	2.0 ft

Our development program pushed past the infield to deliver optimal performance specifically for your outfield. DoublePlay allows you to design your entire field, start to finish, with precision.

DOUBLEPLAY *Natural*

PLAYS: LIKE A NATURAL SURFACE

INFIELD

SPEED

CLAY	FIELDTURF	COMPETITION
42.4 FT/S FEET PER SECOND	42.6 FT/S FEET PER SECOND	45.5 FT/S FEET PER SECOND

STRAIGHTNESS

CLAY	FIELDTURF	COMPETITION
3.6°	3.2°	11.5°

BOUNCE

COMPETITION	3.2 ft
CLAY	2.4 ft
FIELDTURF	2.3 ft

OUTFIELD

SPEED

GRASS	FIELDTURF
35.4 FT/S FEET PER SECOND	37.8 FT/S FEET PER SECOND

STRAIGHTNESS

GRASS	FIELDTURF
2.6°	6.5°

BOUNCE

FIELDTURF	2.6 ft
GRASS	2.0 ft

Our development program pushed past the infield to deliver optimal performance specifically for your outfield. DoublePlay allows you to design your entire field, start to finish, with precision.

TRUSTED AT *Every Level*

MAJOR LEAGUE

MINOR LEAGUE

COLLEGIATE

MAKE IT YOURS!

WE'VE NEVER BEEN FANS OF THE COOKIE CUTTER APPROACH. IT'S YOUR FIELD, SO MAKE IT YOURS! FROM DESIGN TO COLOR PATTERNS, WE'RE HERE TO HELP MAKE YOUR DIAMOND THE TALK OF THE TOWN.

MOUND OPTIONS

When it comes to mounds, several options are open to you depending on your preference. FieldTurf recommends these three options:

WARNING TRACKS OPTIONS

Changing the feeling under foot by substituting the infill material is key to alert your athletes of the transition from the outfield to the warning track. FieldTurf recommends these three options.

BASE PATHS COLORS

FieldTurf offers three standard colors options to design your base paths. Custom colors are available upon request.

ON-FIELD LOGOS

As we produce the logos for every FieldTurf field, nothing is left to a third party. Nothing is left to chance. This provides you with a level of quality assurance that simply cannot be matched.

PORTABLE

ALL SAND

FIELDTURF DARK BROWN

PANTONE 4625 C

PERMANENT

TURFACE® PRO LEAGUE

FIELDTURF RUST

PANTONE 174 C

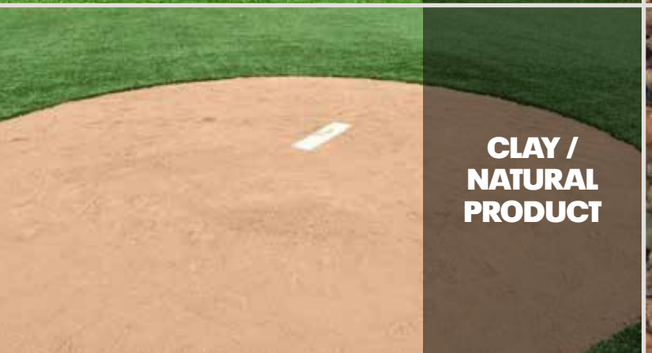

CLAY / NATURAL PRODUCT

LAVA ROCK

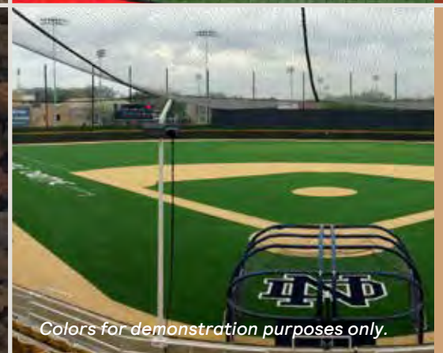

Colors for demonstration purposes only.

FIELDTURF TAN

PANTONE 728 C

GAME CHANGING *Technology*

TOUGHBACK

High-use areas are a challenge for any turf system, and baseball fields are no exception. Cleats dig deep into the turf, right down to backing layers, often puncturing right through them. The damaged areas must then be replaced.

What's the solution? Meet ToughBack, a unique layer applied to the system backing, resulting in a super tough layer once hardened.

"University of North Georgia Softball hosted 12 NCAA DII games last week over a 5-day period, and the pitching lane area is holding up great. FieldTurf has it figured out!"

MIKE DAVENPORT
UNIVERSITY OF NORTH GEORGIA

Equipped on all fieldturf DoublePlay systems

FIELDTURF INNOVATION+ PERFORMANCE CENTER

Our Velcro system offers a quick and simple solution to replacing your batter and umpire areas. We equip you with the spare pieces upfront, allowing your team to exchange when needed.

FTVELCRO

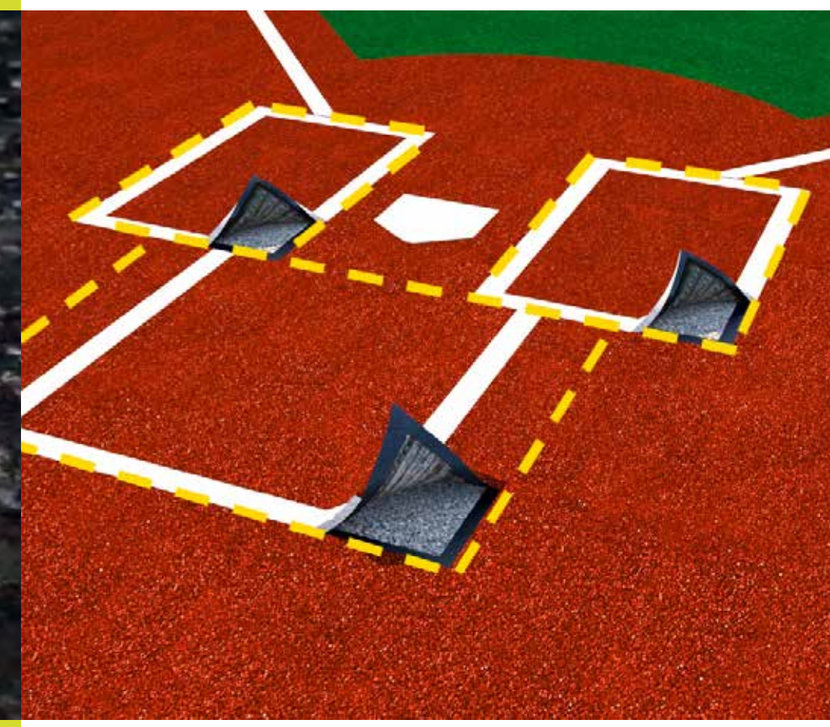

"We have had the Field Turf replaceable home plate batter's box set now for over a year. This is a great product, and it really holds up well. We no longer have to worry about holes in our turf as it is simple to replace that area. Also, the customer service from these guys is absolutely incredible. They are on the ball whenever we call! "

JOHN ARNTSON
CLACKAMAS HIGH SCHOOL
HEAD BASEBALL COACH

WHY FieldTurf

VERTICALLY INTEGRATED
FieldTurf controls all aspects of the manufacturing value chain. From start to finish, we're in control of your field.

EXPERIENCED
With over 20,000 installations worldwide, FieldTurf has been the surface of choice for the last 20+ years.

LEADING DURABILITY
Manufactured and installed with the highest attention to detail, FieldTurf systems showcase proven durability. There are over 2,000 FieldTurf fields still in use that are 8+ years old.

FINANCIALLY STABLE
Part of Tarkett Sports, a division of the Tarkett Group, a worldwide leader of innovative flooring and sports surface solutions, FieldTurf has unprecedented financial support and stability. You can rest easy.

TRUSTED
Regardless of the sport, FieldTurf is the trusted surface of the most elite programs in the world.

ENDLESS PURSUIT OF INNOVATION
From the original 3-layer infill system; to our SureLock coating drainage application; to our game-changing CoolPlay infill - our innovations continue to change the game.

SERVICE
We are as committed to your program as you are; and we're with you for the long term. When you buy a field from FieldTurf, you're buying from a company that knows how to take care of you. It's what we do best.

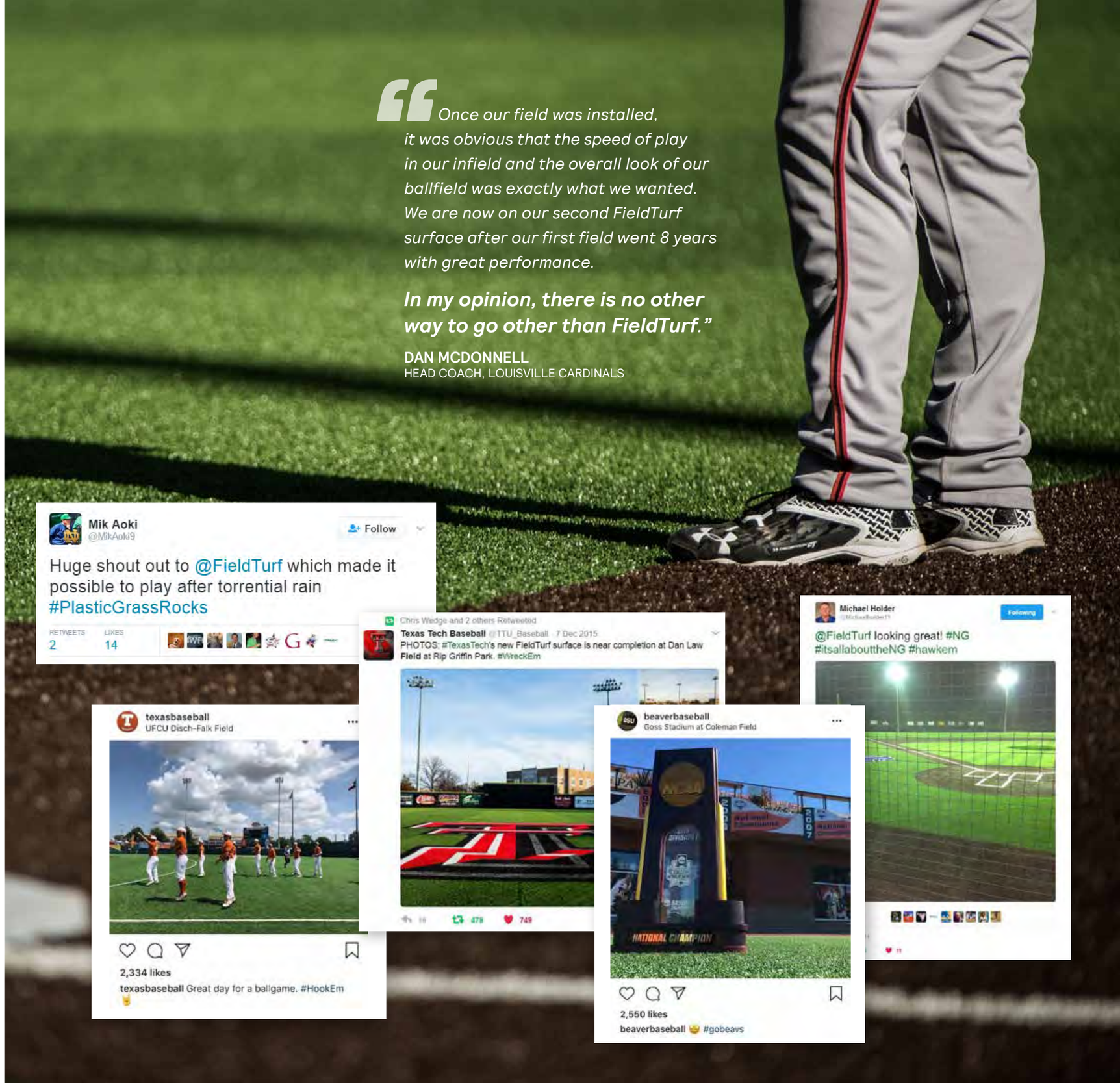

THE TARKETT SPORTS FAMILY – LEADERS IN SPORTS SURFACING

Tarkett SPORTS | FieldTurf® A Tarkett Sports Company | BEYNON® A Tarkett Sports Company | renner® A Beynon Sports Company | GRASSMASTER By Tarkett Sports | PLAYMASTER By Tarkett Sports

FieldTurf® A Tarkett Sports Company

800-724-2969 | info@fieldturf.com | fieldturf.com

FieldTurf®
A Tarkett Sports Company

DOUBLEPLAY Baseball

TECHNICAL SPECIFICATION

Clutch Infield 2"

PROPERTY	VALUE	UNITS	METHOD
Product Stock Code	XT-50-3/8		
Pile Yarn Type	UV-resistant polyethylene		n/a
Yarn Structure	Slit-Film		n/a
Yarn Denier	10800	Denier	D1577
Tape Thickness	130	Microns	D3218
Pile Height	2	inches	D5823
Pile Weight	42	oz/yd^2	D5848
Primary Backing Weight	7+	oz/yd^2	D5848
Secondary Backing Weight (Perforated)	16+	oz/yd^2	D5848
Total Carpet Weight	65	oz/yd^2	D5848
Stitch Gauge	3/8 inch centers		D5793
Tuft Bind	8+	lbs/force	D1335
Grab Tear Length	>200	lbs/force	D5034
Grab Tear Width	>200	lbs/force	D5034
Pill Burn Test	Pass		D2859
Water Permeability	>40	inch/hour	DIN 18-035
Ambient Rubber	1.5	Lbs/ft2	
Sand	5.4	Lbs/ft2	
Total Product Weight	1059	oz/yd^2	

Issue Date: 9/12/2018

Disclaimer: Variation of +/-5% on above listed property values is within normal manufacturing tolerances

FieldTurf®
A Tarkett Sports Company

DOUBLEPLAY Baseball

TECHNICAL SPECIFICATION

Clutch Outfield 2"

PROPERTY	VALUE	UNITS	METHOD
Product Stock Code	FTVT-50		
Pile Yarn Type	UV-resistant polyethylene		n/a
Yarn Structure 1	Ridged Monofilament		n/a
Yarn Denier 1	12000	Denier	D1577
Tape Thickness 1	360	Microns	
Yarn Structure 2	Slit-Film		
Yarn Denier 2	5000	Denier	D1577
Tape Thickness 2	130	Microns	
Pile Height	2	inches	D5823
Pile Weight	39	oz/yd^2	D5848
Primary Backing Weight	7+	oz/yd^2	D5848
Secondary Backing Weight (Perforated)	16+	oz/yd^2	D5848
Total Carpet Weight	62	oz/yd^2	D5848
Stitch Gauge	3/4 inch centers		D5793
Tuft Bind	8+	lbs/force	D1335
Grab Tear Length	>200	lbs/force	D5034
Grab Tear Width	>200	lbs/force	D5034
Pill Burn Test	Pass		D2859
Impact Attenuation (Gmax)	<200	gmax	F1936
Water Permeability	>40	inch/hour	DIN 18-035
Ambient Rubber	2.6	Lbs/ft2	
Sand	3.65	Lbs/ft2	
Total Product Weight	962	oz/yd^2	

Issue Date: 8/17/2018

Disclaimer: Variation of +/-5% on above listed property values is within normal manufacturing tolerances

AMORIM
CORK
COMPOSITES

Amorim 405CR 6mm Rubber Flooring Specifications

	Test Method	Amorim Typical Value
Durometer, Shore A, points of hardness	ASTM D2240-97	60
Density, lbs/ft^3	ASTM D297-93 Part A, Section 16.3	64
Compressibility @ 100 psi, %	ASTM F36-95	12
Recovery, % after 100 psi compression	ASTM F36-95	85
Flexibility	ASTM F137-71(1994)	F=1
Tensile, psi	ASTM D412-98a, die C @ 20 ipm	
With grain		600
Against grain		450
Tear, ppi	ASTM D624-98, die C @ 20 ipm	
With grain		150
Against grain		120
Compression Set, %, 22 hours at 158°F	ASTM D395-98, Method B	
25% deflection		40%
50% deflection		30%
Coefficient of Friction	ASTM D1894-95	
Dry		1.33
Wet		1.56
Critical Radiant Flux	ASTM E 648-99	0.1 W/cm^2
Flammability and Flame Spread	DOC FFI-70 CSPC	Pass
Indoor Abrasion, % of Material Loss	ASTM C501-84(1996)	0.24
Resistance to Chemical Attack	ASTM F925-97	
Ammonia		No surface attack or color change
Bleach		No surface attack or color change
Disinfectant		No surface attack or color change
Alcohol		No surface attack or color change
Tide		No surface attack or color change
5% NaOH Solution		No surface attack or color change
Human Sweat		No surface attack or color change
Instrumented Impact, absorbed energy at rupture, ft/lbs	ASTM D3763-00	20
Static Load Limit, residual compression	ASTM F970-98	.0016"
Rubber In Compression, % deflection	ASTM D575-91, 500 lb. Load	43
Compression Endurance	10,000 fatigue cycles at 50% displacement	5% set

FieldTurf®
A Tarkett Sports Company

DOUBLEPLAY Baseball

TECHNICAL SPECIFICATION

SLIT-FILM/THATCH 1.6"

PROPERTY	VALUE	UNITS	METHOD
Product Stock Code	Vintage 40		
Pile Yarn Type	UV-resistant polyethylene		n/a
Yarn Structure 1	Slit-Film		n/a
Yarn Denier 1	10000+	Denier	D1577
Yarn Structure 2	Texturized Thatch		
Yarn Denier 2	5000	Denier	D1577
Pile Height	1.6	inches	D5823
Pile Weight	90	oz/yd^2	D5848
Primary Backing Weight	7+	oz/yd^2	D5848
Secondary Backing Weight (Perforated)	20	oz/yd^2	D5848
Total Weight	117	oz/yd^2	D5848
Stitch Gauge	3/8 inch centers		D5793
Tuft Bind	8+	lbs/force	D1335
Water Permeability	>40	inch/hour	DIN 18-035
Grab Tear (Length)	>200	lbs/force	D5034
Grab Tear (Width)	>200	lbs/force	D5034
Olive Core Infill	1.2	lb/ft2	
Sand Infill	6	lbs/ft2	

Issue Date: 9/21/2020

Disclaimer: Variation of +/-5% on above listed property values is within normal manufacturing tolerances

FieldTurf®
A Tarkett Sports Company

DOUBLEPLAY Baseball

TECHNICAL SPECIFICATION

SLIT-FILM/THATCH 1.6"

PROPERTY	VALUE	UNITS	METHOD
Product Stock Code	Vintage 40		
Pile Yarn Type	UV-resistant polyethylene		n/a
Yarn Structure 1	Slit-Film		n/a
Yarn Denier 1	10000+	Denier	D1577
Yarn Structure 2	Texturized Thatch		
Yarn Denier 2	5000	Denier	D1577
Pile Height	1.6	inches	D5823
Pile Weight	90	oz/yd^2	D5848
Primary Backing Weight	7+	oz/yd^2	D5848
Secondary Backing Weight (Perforated)	20	oz/yd^2	D5848
Total Weight	117	oz/yd^2	D5848
Stitch Gauge	3/8 inch centers		D5793
Tuft Bind	8+	lbs/force	D1335
Water Permeability	>40	inch/hour	DIN 18-035
Grab Tear (Length)	>200	lbs/force	D5034
Grab Tear (Width)	>200	lbs/force	D5034
SBR Rubber Infill	1.2	lb/ft2	
Sand Infill	4.5	lbs/ft2	

Issue Date: 9/8/2020

Disclaimer: Variation of +/-5% on above listed property values is within normal manufacturing tolerances

FieldTurf®
A Tarkett Sports Company

TrueBlend

NATURALLY FUSED

BLENDED TO CREATE A SUPERIOR SOLUTION: Made from natural cork and premier-grade elastomers, TrueBlend is produced by fusing these materials into one. The result is an infill that provides natural-like playing characteristics, aesthetics and the added benefit of easy upkeep. Natural materials and sophisticated engineering blended into one.

COOLING PROPERTIES

The natural materials used in TrueBlend are designed to offer a beneficial cooling effect.

ENVIRONMENTALLY FRIENDLY

TrueBlend is engineered using all recycled material. The system contributes to a positive impact for the planet.

EASY UPKEEP

Being irrigation and replenishment free, TrueBlend truly is a low-stress solution.

DURABILTY

The materials used in TrueBlend showcases proven durability and experience.

SUSTAIN THE GAME

MAKING A REAL DIFFERENCE EVERY YEAR

We were founded with the promise to make athletes safer during the game — and now we extend that promise to completely eliminate its potential to harm not just people but the environment too. FieldTurf's new Sustain The Game program showcases our sustainability commitment and our unwavering dedication to drive the field to zero.

TECHNICAL DATA SHEET

FIELDTURF INNOVATION+ PERFORMANCE CENTER

HINGED **VERSATILE**

The ultimate drainage and shock underlayment solution.

VersaTile	
Dimensions	42'' x 24''
Thickness	13mm / ½''
Weight per sq.ft	220g / 0.5lb
% of recycled Turf	50 %
Dimensional Stability -30 °C / 60 °	< 1 %
Installation specification	Liner between stones and tiles
Installation specificity	Unroll carpet over the tiles before applying any equipment load

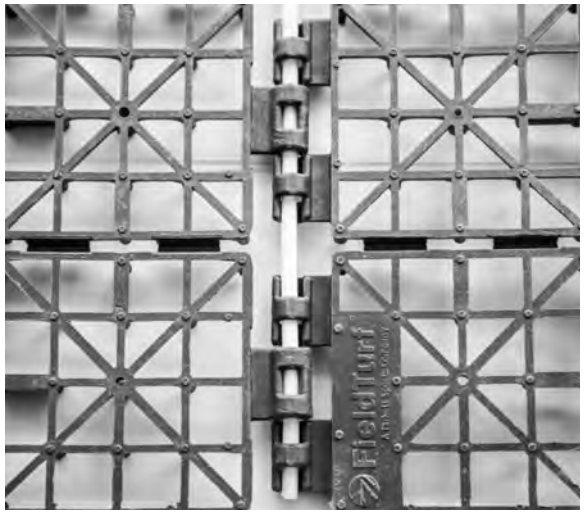

VersaTile installed under:	Alone (concrete)	Multi40-HD + SBR	FTRV2	FTRV1
Gmax (over concrete)	164	124	100	82
Clegg Hammer	185	99	74	65
Force Reduction (%)	47 %	61 %	67 %	69 %
Vertical Deformation (mm)	4.5 mm	8.0 mm	10.2 mm	10.8 mm
Percolation rate (with Mirafi liner)	> 360 mm/hr	System rate	System rate	System rate

SUBJECT	HINGED VERSATILE - SPEC SHEET				
TESTED BY	Nicolas Aumonier	DATE	27/06/2016	REPORT No.	16-031

FIELDTURF INNOVATION & RESEARCH CENTRE
PRIVILEDGED & CONFIDENTIAL – THIS REPORT IS FOR INTERNAL USE ONLY.

FieldTurf®
A Tarkett Sports Company

PRODUCT
TECHNICAL
SPECIFICATION

VERSATILE

Property	Value	Units	Test Method
Product Structure	Drainage and Shock Tile		N/A
Material Type	Recycled Turf/TPE		N/A
VersaTile Dimensions	24 X 21	inches	N/A
VersaTile Thickness	13	mm	N/A
VersaTile Weight per Square Foot	175	grams	N/A
Interlock Format	Edge Clips		N/A
Average Shock Absorption – VersaTile Only	53	%	EN 14808
Average Vertical Deformation – VersaTile Only	5.4	mm	EN 14809
Water Infiltration Rate	>72,000	mm/hr	EN 12616
Free Draining Void Area	84	%	N/A
Dimensional Stability -30C/60C	<1	%	EN 13746

Variation of +/- 5% on above listed property values is within normal manufacturing tolerances
A proper liner is needed between the (stone) base and the VersaTile
It is imperative to install the turf carpet over the VersaTile before applying any equipment or significant loads

Issue Date: 04/03/2014

Top Side View of VersaTile Design

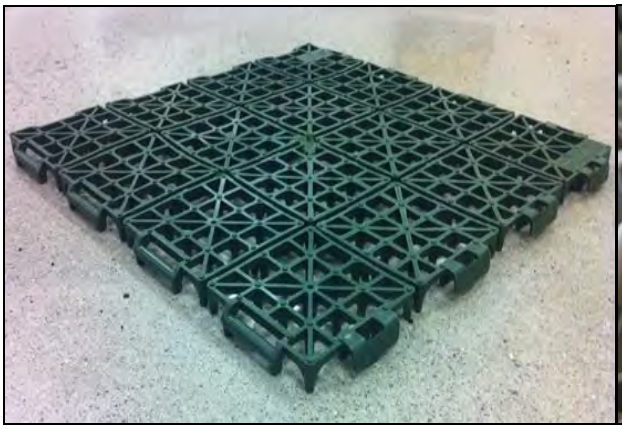

Bottom Side View of VersaTile Design

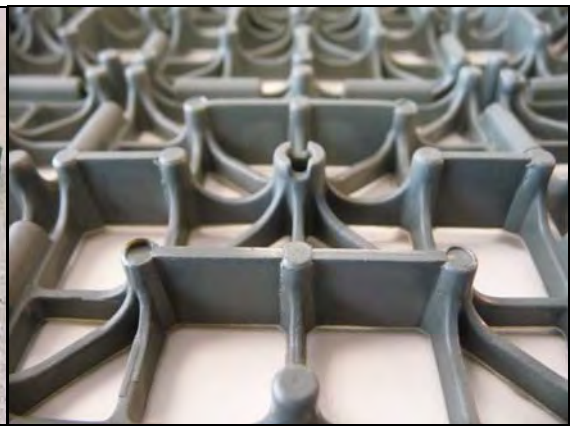

FieldTurf®
A Tarkett Sports Company

THE ULTIMATE
SURFACE EXPERIENCE

envirofill®
HIGH PERFORMANCE INFILL
Microban®
antimicrobial product protection

IT'S NOT JUST PART OF THE TURF.
IT'S PART OF THE GAME.™

Envirofill is the natural choice for infill on football fields across the country. It's tough like the game itself, and players love it because it's cooler, more natural, and non-compacting. Plus, it's durable and it's completely reusable for multiple turf lifecycles. Want an infill that can take some serious hits? Call 800-548-0402 or visit usgreentech.com for more information and samples.

Produced by
USGreentech

"Anderson Township Park District (ATPD) was looking for a synthetic turf field that delivered on performance, environmental responsibility, and longevity. The new fields, using Envirofill from USGreentech, delivered on all three aspects."

- Ken Kushner, Executive Director I Anderson Township Park District

Maximum playability. Envirofill® tests have shown that it has 85% less flyout than crumb rubber infill. Its highly rounded quartz core resists compression so it doesn't continue to compact over the life of your field.

It's cool. Envirofill's natural heat reducing properties have been proven to lower synthetic surface temperatures as much as 25%. And it resists changes brought on by even the harshest weather conditions.

It's cleaner. Microban antimicrobial protection is infused into Envirofill during the manufacturing process to help prevent the growth of bacteria, mold, and mildew that can cause stains, odors, and product deterioration.

It's reusable. With its superior durability, Envirofill can be used for multiple turf lifecycles with no decrease in performance.

PRODUCT DATA ENVIROFILL® 12-20

Physical properties	Measure	Test Method	Value
Dimensions	98.6% Retained 12-20 mesh sieves		
Materials	99.6% Silicon Dioxide, Pigment and Acrylic		
Hardness	Mohs Scale		6-8
Roundness	Krumbein Shape	ISO13503-2/API RP19C	0.7+
Density	lbs/cf	ASTM F-1815-06	110
Flammability		ASTM E648	Non-flammable
Dust			Negligible
Angle of Repose		ASTM C1444	±30 degrees
TCLP Metals Content	mg/kg	ASTM 6010	<Min Detectable Levels
Abrasiveness	Index	ASTM F 1015	26+/-2
Coefficient of Friction	Direct	ASTM F 1551	0.80 dynamic
Packaging	50lb bags or 3000lb Super Sacks		

Envirofill's exclusive partnership with Microban® provides an added level of antimicrobial protection for the lifetime of your infill.

For more information visit www.USGreentech.com or call (800) 548-0402

envirofill. HIGH PERFORMANCE INFILL

Microban antimicrobial product protection

Produced by USGreentech

FieldTurf
A Tarkett Sports Company
THE ULTIMATE SURFACE EXPERIENCE

ENVIROSAND MATERIAL SPECIFICATION

Test Method	Property	Unit	Range
ISO 2031	Bulk Density	g/cm3	1.68 – 1.76
ASTM D792	Specific Gravity	-	2.8 – 3.0
ISO 2030	Size Analysis by Mechanical Sieving	%	*see table*
	(mesh)	***(mm)***	***% retention***
	8	2.36	0.0
	10	2.00	0.0- 0.2
	12	1.70	0.8-1.0
	14	1.40	15.7 - 17.7
	16	1.18	29.8 - 31.8
	20	0.85	43.6 -45.6
	under	< 0.85	4.5- 6.9

PRODUCT TECHNICAL SPECIFICATION

FTHD-1-EcoGrind

Property	Value	Units	ASTM
Product Stock Code	FTHD-1-EcoGrind		
Pile Yarn Type	UV-resistant polyethylene		n/a
Yarn Structure	Slit-Film		n/a
Yarn Denier	10800	Denier	D1577
Tape Thickness	130	Microns	D3218
Pile Height	2.5	inches	D5823
Pile Weight	36	oz/yd^2	D5848
Primary Backing Weight	7+	oz/yd^2	D5848
Secondary Backing Weight (Finger-Unit)	14+	oz/yd^2	D5848
Total Weight	57	oz/yd^2	D5848
Stitch Gauge	3/4 inch centers		D5793
Tuft Bind	8+	lbs/force	D1335
Grab Tear Length	>200	lbs/force	D5034
Grab Tear Width	>200	lbs/force	D5034
Pill Burn Test	Pass		D2859
Impact Attenuation (Gmax)	<200	gmax	F1936
Water Permeability	>40	inch/hour	DIN 18-035
Nike Grind	3	Lbs/ft2	
Sand	4	Lbs/ft2	

Variation of +/- 5% on above listed property values is within normal manufacturing tolerances

PRODUCT TECHNICAL SPECIFICATION

FTHD-2-EcoGrind

Property	Value	Units	ASTM
Product Stock Code	FTHD-2-EcoGrind		
Pile Yarn Type	UV-resistant polyethylene		n/a
Yarn Structure	Slit-Film		n/a
Yarn Denier	10800	Denier	D1577
Tape Thickness	130	Microns	D3218
Pile Height	2	inches	D5823
Pile Weight	30	oz/yd^2	D5848
Primary Backing Weight	7+	oz/yd^2	D5848
Secondary Backing Weight (Finger-Unit)	14+	oz/yd^2	D5848
Total Weight	51	oz/yd^2	D5848
Stitch Gauge	3/4 inch centers		D5793
Tuft Bind	8+	lbs/force	D1335
Grab Tear Length	>200	lbs/force	D5034
Grab Tear Width	>200	lbs/force	D5034
Pill Burn Test	Pass		D2859
Impact Attenuation (Gmax)	<200	gmax	F1936
Water Permeability	>40	inch/hour	DIN 18-035
Nike Grind	3	Lbs/ft2	
Sand	2	Lbs/ft2	

Variation of +/- 5% on above listed property values is within normal manufacturing tolerances

Issue Date: 10/22/14

Forgrin® HT-140

Thermoplastic Elastomer (TPE)

Description	TPE pellet for infill of synthetic turf.
Characteristics	Made with origin guaranteed and first-use raw materials. High UV and weathering resistance. It does not release any dust. . Recommended for areas with UV irradiance ≤ 140 kLangley per year.
Colour	Dark brown, green, beige.
Norm compliance	Forgrin® passed the tests based on the following regulations: • EU Directive EN 71-3 (Safety of Toys)
Safety	Forgrin® does not contain the following hazardous substances: • **Phthalates** and **Perfluorooctane Sulfonates (PFOS),** as per European Regulation 1907/2006 annex 17 applicable from 01.06.2009 (REACH) • **Halogens,** as per IEC 61249-2-21 • **Polycyclic Aromatic Hydrocarbons (PAH)** as per Document Zek 01-08 • **Solvents (VOC),** as per D.Lgs 152/2006, Art.268

The following figures indicate the typical material properties and are not to be considered as a specification.

Physical properties	Typical values	Test method	Units
Hardness 3s	**63**	ASTM D2240	Shore A
Apparent density	**0.83**	ASTM D1895	g/cm^3
Pellet length	**2**		mm
Particle size (weight % sieve size 1.6 - 2.5 mm)	**98**	So.f.ter MA TPE-S 2.0	%

Disclaimer
The figures reported in this Technical Data Sheet are based on analyses carried out in SO.F.TER. laboratories according to the above mentioned test methods. These figures indicate the **typical material properties** and are not to be considered as a specification.

Use and maintenance.
Forgrin ® does not require any particular care after laying. In the hottest days, we recommend to water the pitch before using it, in order to lower the surface temperature. We also recommend not to shed any substance such as detergents, solvents and lubricating oils which could damage the pitch.

Recycling
Forgrin ® is completely recyclable and can be reprocessed at the end of its life cycle.

Trademark
Forgrin ® is a registered trademark of SO.F.TER. SPA, Italy.

SO.F.TER. SPA
Via Mastro Giorgio 1
Zona Industriale Villa Selva
47122 Forlì FC Italy

Tel +39 0543 790411
Fax +39 0543 473119
www.softerspa.com
www. tpeinfill.com.com

PRODUCT TECHNICAL SPECIFICATION

FTHD-57-EcoGrind

Property	Value	Units	ASTM
Product Stock Code	FTHD-57-EcoGrind		
Pile Yarn Type	UV-resistant polyethylene		n/a
Yarn Structure	Slit-Film		n/a
Yarn Denier	10800	Denier	D1577
Tape Thickness	130	Microns	D3218
Pile Height	2.25	inches	D5823
Pile Weight	33	oz/yd^2	D5848
Primary Backing Weight	7+	oz/yd^2	D5848
Secondary Backing Weight (Finger-Unit)	14+	oz/yd^2	D5848
Total Weight	54	oz/yd^2	D5848
Stitch Gauge	3/4 inch centers		D5793
Tuft Bind	8+	lbs/force	D1335
Grab Tear Length	>200	lbs/force	D5034
Grab Tear Width	>200	lbs/force	D5034
Pill Burn Test	Pass		D2859
Impact Attenuation (Gmax)	<200	gmax	F1936
Water Permeability	>40	inch/hour	DIN 18-035
Nike Grind	3	Lbs/ft2	
Sand	3	Lbs/ft2	

Variation of +/- 5% on above listed property values is within normal manufacturing tolerances

PRODUCT TECHNICAL SPECIFICATION

FTRV-1-EcoGrind

Property	Value	Units	ASTM
Product Stock Code	FTRV-1-EcoGrind		
Pile Yarn Type	UV-resistant polyethylene		n/a
Yarn Structure	Ridged Monofilament		n/a
Yarn Denier	10800	Denier	D1577
Tape Thickness	235	Microns	D3218
Pile Height	2.5	inches	D5823
Pile Weight	40	oz/yd^2	D5848
Primary Backing Weight	7+	oz/yd^2	D5848
Secondary Backing Weight (Finger-Unit)	14+	oz/yd^2	D5848
Total Weight	61	oz/yd^2	D5848
Stitch Gauge	3/4 inch centers		D5793
Tuft Bind	8+	lbs/force	D1335
Grab Tear Length	>200	lbs/force	D5034
Grab Tear Width	>200	lbs/force	D5034
Pill Burn Test	Pass		D2859
Impact Attenuation (Gmax)	<200	gmax	F1936
Water Permeability	>40	inch/hour	DIN 18-035
Nike Grind	3	Lbs/ft2	
Sand	4	Lbs/ft2	

Variation of +/- 5% on above listed property values is within normal manufacturing tolerances

PRODUCT TECHNICAL SPECIFICATION

FTRV-2-EcoGrind

Property	Value	Units	ASTM
Product Stock Code	FTRV-2-EcoGrind		
Pile Yarn Type	UV-resistant polyethylene		n/a
Yarn Structure	Ridged Monofilament		n/a
Yarn Denier	10800	Denier	D1577
Tape Thickness	235	Microns	D3218
Pile Height	2	inches	D5823
Pile Weight	34	oz/yd^2	D5848
Primary Backing Weight	7+	oz/yd^2	D5848
Secondary Backing Weight (Finger-Unit)	14+	oz/yd^2	D5848
Total Weight	55	oz/yd^2	D5848
Stitch Gauge	3/4 inch centers		D5793
Tuft Bind	8+	lbs/force	D1335
Grab Tear Length	>200	lbs/force	D5034
Grab Tear Width	>200	lbs/force	D5034
Pill Burn Test	Pass		D2859
Impact Attenuation (Gmax)	<200	gmax	F1936
Water Permeability	>40	inch/hour	DIN 18-035
Nike Grind	3	Lbs/ft2	
Sand	2	Lbs/ft2	

Variation of +/- 5% on above listed property values is within normal manufacturing tolerances

PRODUCT TECHNICAL SPECIFICATION

FTRV-57-EcoGrind

Property	Value	Units	ASTM
Product Stock Code	FTRV-57-EcoGrind		
Pile Yarn Type	UV-resistant polyethylene		n/a
Yarn Structure	Ridged Monofilament		n/a
Yarn Denier	10800	Denier	D1577
Tape Thickness	235	Microns	D3218
Pile Height	2.25	inches	D5823
Pile Weight	36	oz/yd^2	D5848
Primary Backing Weight	7+	oz/yd^2	D5848
Secondary Backing Weight (Finger-Unit)	14+	oz/yd^2	D5848
Total Weight	57	oz/yd^2	D5848
Stitch Gauge	3/4 inch centers		D5793
Tuft Bind	8+	lbs/force	D1335
Grab Tear Length	>200	lbs/force	D5034
Grab Tear Width	>200	lbs/force	D5034
Pill Burn Test	Pass		D2859
Impact Attenuation (Gmax)	<200	gmax	F1936
Water Permeability	>40	inch/hour	DIN 18-035
Nike Grind	3	Lbs/ft2	
Sand	3	Lbs/ft2	

Variation of +/- 5% on above listed property values is within normal manufacturing tolerances

PRODUCT TECHNICAL SPECIFICATION

FTVT-50-EcoGrind

Property	Value	Units	ASTM
Product Stock Code	FTVT-50-EcoGrind		
Pile Yarn Type	UV-resistant polyethylene		n/a
Yarn Structure 1	Ridged Monofilament Field Green		n/a
Yarn Denier 1	10800	Denier	D1577
Yarn Structure 2	Slit-Film Summergreen		
Yarn Denier 2	5000	Denier	
Pile Height	2	inches	D5823
Pile Weight	35	oz/yd²	D5848
Primary Backing Weight	7+	oz/yd²	D5848
Secondary Backing Weight (Perforated)	16+	oz/yd²	D5848
Total Weight	58	oz/yd²	D5848
Stitch Gauge	3/4 inch centers		D5793
Tuft Bind	8+	lbs/force	D1335
Pill Burn Test	Pass		D2859
Impact Attenuation (Gmax)	<200	gmax	F1936
Water Permeability	>40	inch/hour	DIN 18-035
Nike Grind	3	lbs/ft2	
Sand	2	lbs/ft2	

Variation of +/- 5% on above listed property values is within normal manufacturing tolerances

PRODUCT TECHNICAL SPECIFICATION

FTVT-57-EcoGrind

Property	Value	Units	ASTM
Product Stock Code	FTVT-57-EcoGrind		
Pile Yarn Type	UV-resistant polyethylene		n/a
Yarn Structure 1	Ridged Monofilament Field Green		n/a
Yarn Denier 1	10800	Denier	D1577
Yarn Structure 2	Slit-Film Summergreen		
Yarn Denier 2	5000	Denier	
Pile Height	2.25	inches	D5823
Pile Weight	38	oz/yd^2	D5848
Primary Backing Weight	7+	oz/yd^2	D5848
Secondary Backing Weight (Perforated)	16+	oz/yd^2	D5848
Total Weight	61	oz/yd^2	D5848
Stitch Gauge	3/4 inch centers		D5793
Tuft Bind	8+	lbs/force	D1335
Pill Burn Test	Pass		D2859
Impact Attenuation	<200	gmax	F1936
Water Permeability	>40	inch/hour	DIN 18-035
Nike Grind	3	lbs/ft2	
Sand	3	lbs/ft2	

Variation of +/- 5% on above listed property values is within normal manufacturing tolerances

PRODUCT TECHNICAL SPECIFICATION

FTVT-65-EcoGrind

Property	Value	Units	ASTM
Product Stock Code	FTVT-65-EcoGrind		
Pile Yarn Type	UV-resistant polyethylene		n/a
Yarn Structure 1	Ridged Monofilament Field Green		n/a
Yarn Denier 1	10800	Denier	D1577
Yarn Structure 2	Slit-Film Summergreen		
Yarn Denier 2	5000	Denier	
Pile Height	2.5	inches	D5823
Pile Weight	42	oz/yd²	D5848
Primary Backing Weight	7+	oz/yd²	D5848
Secondary Backing Weight (Perforated)	16+	oz/yd²	D5848
Total Weight	65	oz/yd²	D5848
Stitch Gauge	3/4 inch centers		D5793
Tuft Bind	8+	lbs/force	D1335
Pill Burn Test	Pass		D2859
Impact Attenuation (Gmax)	<200	gmax	F1936
Water Permeability	>40	inch/hour	DIN 18-035
Nike Grind	3	lbs/ft2	
Sand	4	lbs/ft2	

Variation of +/- 5% on above listed property values is within normal manufacturing tolerances

PRODUCT TECHNICAL SPECIFICATION

FTVTP-50-EcoGrind

Property	Value	Units	ASTM
Product Stock Code	FTVTP-50-EcoGrind		
Pile Yarn Type	UV-resistant polyethylene		n/a
Yarn Structure 1	Ridged Monofilament Field Green		n/a
Yarn Denier 1	10800	Denier	D1577
Yarn Structure 2	Slit-Film Summergreen		
Yarn Denier 2	5000	Denier	
Pile Height	2	inches	D5823
Pile Weight	35	oz/yd^2	D5848
Primary Backing Weight	7+	oz/yd^2	D5848
Secondary Backing Weight (Finger-Unit)	14+	oz/yd^2	D5848
Total Weight	56	oz/yd^2	D5848
Stitch Gauge	3/4 inch centers		D5793
Tuft Bind	8+	lbs/force	D1335
Pill Burn Test	Pass		D2859
Impact Attenuation (Gmax)	<200	gmax	F1936
Water Permeability	>40	inch/hour	DIN 18-035
Nike Grind	3	lbs/ft2	
Sand	2	lbs/ft2	

Variation of +/- 5% on above listed property values is within normal manufacturing tolerances

PRODUCT TECHNICAL SPECIFICATION

FTVTP-65-EcoGrind

Property	Value	Units	ASTM
Product Stock Code	FTVTP-65-EcoGrind		
Pile Yarn Type	UV-resistant polyethylene		n/a
Yarn Structure 1	Ridged Monofilament Field Green		n/a
Yarn Denier 1	10800	Denier	D1577
Yarn Structure 2	Slit-Film Summergreen		
Yarn Denier 2	5000	Denier	
Pile Height	2.5	inches	D5823
Pile Weight	42	oz/yd^2	D5848
Primary Backing Weight	7+	oz/yd^2	D5848
Secondary Backing Weight (Finger-Unit)	14+	oz/yd^2	D5848
Total Weight	63	oz/yd^2	D5848
Stitch Gauge	3/4 inch centers		D5793
Tuft Bind	8+	lbs/force	D1335
Pill Burn Test	Pass		D2859
Impact Attenuation (Gmax)	<200	gmax	F1936
Water Permeability	>40	inch/hour	DIN 18-035
Nike Grind	3	lbs/ft2	
Sand	4	lbs/ft2	

Variation of +/- 5% on above listed property values is within normal manufacturing tolerances

PRODUCT TECHNICAL SPECIFICATION

Multi40-HD-EcoGrind

Property	Value	Units	ASTM
Product Stock Code	Multi40-HD-EcoGrind		
Pile Yarn Type	UV-resistant polyethylene		n/a
Yarn Structure	Slit-Film		n/a
Yarn Denier	10800	Denier	D1577
Tape Thickness	130	Microns	D3218
Pile Height	1.6	inches	D5823
Pile Weight	38	oz/yd^2	D5848
Primary Backing Weight	7+	oz/yd^2	D5848
Secondary Backing Weight (Perforated)	26	oz/yd^2	D5848
Total Weight	71	oz/yd^2	D5848
Stitch Gauge	3/8 inch centers		D5793
Tuft Bind	8+	lbs/force	D1335
Grab Tear Length	>200	lbs/force	D5034
Grab Tear Width	>200	lbs/force	D5034
Pill Burn Test	Pass		D2859
Impact Attenuation (Gmax)	<200	gmax	F1936
Water Permeability	>40	inch/hour	DIN 18-035
Nike Grind	1.5	Lbs/ft2	
Sand	3.75	Lbs/ft2	

Variation of +/- 5% on above listed property values is within normal manufacturing tolerances
A separate shockpad is required under this system. Ask us for details.

PRODUCT TECHNICAL SPECIFICATION

Multi40-RV-EcoGrind

Property	Value	Units	ASTM
Product Stock Code	Multi40-RV-EcoGrind		
Pile Yarn Type	UV-resistant polyethylene		n/a
Yarn Structure	Ridged Monofilament		n/a
Yarn Denier	10800	Denier	D1577
Tape Thickness	235	Microns	D3218
Pile Height	1.6	inches	D5823
Pile Weight	38	oz/yd^2	D5848
Primary Backing Weight	7+	oz/yd^2	D5848
Secondary Backing Weight (Perforated)	26	oz/yd^2	D5848
Total Weight	71	oz/yd^2	D5848
Stitch Gauge	3/8 inch centers		D5793
Tuft Bind	8+	lbs/force	D1335
Grab Tear Length	>200	lbs/force	D5034
Grab Tear Width	>200	lbs/force	D5034
Pill Burn Test	Pass		D2859
Impact Attenuation (Gmax)	<200	gmax	F1936
Water Permeability	>40	inch/hour	DIN 18-035
Nike Grind	1.5	Lbs/ft2	
Sand	3.75	Lbs/ft2	

Variation of +/- 5% on above listed property values is within normal manufacturing tolerances
A separate shockpad is necessary under this system. Ask us for details.

PRODUCT TECHNICAL SPECIFICATION

XM6-50-EcoGrind

Property	Value	Units	ASTM
Product Stock Code	XM6-50-EcoGrind		
Pile Yarn Type	UV-resistant polyethylene		n/a
Yarn Structure	Ridged Monofilament		n/a
Yarn Denier	10800	Denier	D1577
Tape Thickness	280	Microns	D3218
Pile Height	2	inches	D5823
Pile Weight	30	oz/yd^2	D5848
Primary Backing Weight	7+	oz/yd^2	D5848
Secondary Backing Weight (Perforated)	16+	oz/yd^2	D5848
Total Weight	53	oz/yd^2	D5848
Stitch Gauge	3/4 inch centers		D5793
Tuft Bind	8+	lbs/force	D1335
Grab Tear Length	>200	lbs/force	D5034
Grab Tear Width	>200	lbs/force	D5034
Pill Burn Test	Pass		D2859
Impact Attenuation (Gmax)	<200	gmax	F1936
Water Permeability	>40	inch/hour	DIN 18-035
Nike Grind	3	Lbs/ft2	
Sand	2	Lbs/ft2	

Variation of +/- 5% on above listed property values is within normal manufacturing tolerances

PRODUCT TECHNICAL SPECIFICATION

XM6-57-EcoGrind

Property	Value	Units	ASTM
Product Stock Code	XM6-57-EcoGrind		
Pile Yarn Type	UV-resistant polyethylene		n/a
Yarn Structure	Ridged Monofilament		n/a
Yarn Denier	10800	Denier	D1577
Tape Thickness	280	Microns	D3218
Pile Height	2	inches	D5823
Pile Weight	33	oz/yd^2	D5848
Primary Backing Weight	7+	oz/yd^2	D5848
Secondary Backing Weight (Perforated)	16+	oz/yd^2	D5848
Total Weight	56	oz/yd^2	D5848
Stitch Gauge	3/4 inch centers		D5793
Tuft Bind	8+	lbs/force	D1335
Grab Tear Length	>200	lbs/force	D5034
Grab Tear Width	>200	lbs/force	D5034
Pill Burn Test	Pass		D2859
Impact Attenuation (Gmax)	<200	gmax	F1936
Water Permeability	>40	inch/hour	DIN 18-035
Nike Grind	3	Lbs/ft2	
Sand	3	Lbs/ft2	

Variation of +/- 5% on above listed property values is within normal manufacturing tolerances

PRODUCT TECHNICAL SPECIFICATION

XM6-65-EcoGrind

Property	Value	Units	ASTM
Product Stock Code	XM6-65-EcoGrind		
Pile Yarn Type	UV-resistant polyethylene		n/a
Yarn Structure	Ridged Monofilament		n/a
Yarn Denier	10800	Denier	D1577
Tape Thickness	280	Microns	D3218
Pile Height	2.5	inches	D5823
Pile Weight	35	oz/yd^2	D5848
Primary Backing Weight	7+	oz/yd^2	D5848
Secondary Backing Weight (Perforated)	16+	oz/yd^2	D5848
Total Weight	58	oz/yd^2	D5848
Stitch Gauge	3/4 inch centers		D5793
Tuft Bind	8+	lbs/force	D1335
Grab Tear Length	>200	lbs/force	D5034
Grab Tear Width	>200	lbs/force	D5034
Pill Burn Test	Pass		D2859
Impact Attenuation (Gmax)	<200	gmax	F1936
Water Permeability	>40	inch/hour	DIN 18-035
Nike Grind	3	Lbs/ft2	
Sand	4	Lbs/ft2	

Variation of +/- 5% on above listed property values is within normal manufacturing tolerances

PRODUCT TECHNICAL SPECIFICATION

XT-50-EcoGrind

Property	Value	Units	ASTM
Product Stock Code	XT-50-EcoGrind		
Pile Yarn Type	UV-resistant polyethylene		n/a
Yarn Structure	Slit-Film		n/a
Yarn Denier	10000+	Denier	D1577
Tape Thickness	100+	Microns	D3218
Pile Height	2	inches	D5823
Pile Weight	30	oz/yd^2	D5848
Primary Backing Weight	7+	oz/yd^2	D5848
Secondary Backing Weight (Perforated)	16+	oz/yd^2	D5848
Total Weight	53	oz/yd^2	D5848
Stitch Gauge	3/4 inch centers		D5793
Tuft Bind	8+	lbs/force	D1335
Grab Tear Length	>200	lbs/force	D5034
Grab Tear Width	>200	lbs/force	D5034
Pill Burn Test	Pass		D2859
Impact Attenuation (Gmax)	<200	gmax	F1936
Water Permeability	>40	inch/hour	DIN 18-035
Nike Grind	3	Lbs/ft2	
Sand	2	Lbs/ft2	

Variation of +/- 5% on above listed property values is within normal manufacturing tolerances

PRODUCT TECHNICAL SPECIFICATION

XT-57-EcoGrind

Property	Value	Units	ASTM
Product Stock Code	XT-57-EcoGrind		
Pile Yarn Type	UV-resistant polyethylene		n/a
Yarn Structure	Slit-Film		n/a
Yarn Denier	10000+	Denier	D1577
Tape Thickness	100+	Microns	D3218
Pile Height	2.25	inches	D5823
Pile Weight	33	oz/yd^2	D5848
Primary Backing Weight	7+	oz/yd^2	D5848
Secondary Backing Weight (Perforated)	16+	oz/yd^2	D5848
Total Weight	56	oz/yd^2	D5848
Stitch Gauge	3/4 inch centers		D5793
Tuft Bind	8+	lbs/force	D1335
Grab Tear Length	>200	lbs/force	D5034
Grab Tear Width	>200	lbs/force	D5034
Pill Burn Test	Pass		D2859
Impact Attenuation (Gmax)	<200	gmax	F1936
Water Permeability	>40	inch/hour	DIN 18-035
Nike Grind	3	Lbs/ft2	
Sand	3	Lbs/ft2	

Variation of +/- 5% on above listed property values is within normal manufacturing tolerances

PRODUCT TECHNICAL SPECIFICATION

XT-65-EcoGrind

Property	Value	Units	ASTM
Product Stock Code	XT-65-EcoGrind		
Pile Yarn Type	UV-resistant polyethylene		n/a
Yarn Structure	Slit-Film		n/a
Yarn Denier	10000+	Denier	D1577
Tape Thickness	100+	Microns	D3218
Pile Height	2	inches	D5823
Pile Weight	36	oz/yd^2	D5848
Primary Backing Weight	7+	oz/yd^2	D5848
Secondary Backing Weight (Perforated)	16+	oz/yd^2	D5848
Total Weight	59	oz/yd^2	D5848
Stitch Gauge	3/4 inch centers		D5793
Tuft Bind	8+	lbs/force	D1335
Grab Tear Length	>200	lbs/force	D5034
Grab Tear Width	>200	lbs/force	D5034
Pill Burn Test	Pass		D2859
Impact Attenuation (Gmax)	<200	gmax	F1936
Water Permeability	>40	inch/hour	DIN 18-035
Nike Grind	3	Lbs/ft2	
Sand	4	Lbs/ft2	

Variation of +/- 5% on above listed property values is within normal manufacturing tolerances

FieldTurf
A Tarkett Sports Company
THE ULTIMATE SURFACE EXPERIENCE

ECOMAX MATERIAL SPECIFICATION

Test Method	Property	Unit	Range
ISO 2031	Bulk Density	kg/l	0.45-0.65
ASTM D792	Specific Gravity	-	1.05-1.25
ISO 2030	Size Analysis by Mechanical Sieving	%	*see table*
	(mesh)	***(mm)***	***% retention***
	8	2.36	0.0-2.0
	10	2.00	0.0-40.0
	12	1.70	40.0-100.0
	14	1.40	0.0-40.0
	16	1.18	0.0-5.0
	20	0.85	0.0-1.0
	under	< 0.85	0.0

FieldTurf
A Tarkett Sports Company
THE ULTIMATE SURFACE EXPERIENCE

PUREGEO MATERIAL SPECIFICATION

Test Method	Property	Unit	Range
ISO 2031	Bulk Density	g/cm3	0.1 - 0.2
ASTM D792	Specific Gravity	-	< 1.0
ISO 2030	Size Analysis by Mechanical Sieving	%	*see table*
	(mesh)	***(mm)***	***% retention***
	8	2.36	5.0-20.0
	10	2.00	5.0-20.0
	12	1.70	5.0-20.0
	14	1.40	5.0-20.0
	16	1.18	5.0-20.0
	20	0.85	5.0-20.0
	40	0.42	20.0-50.0
	under	< 0.42	0.0-10.0

**Note that fluctuations in moisture content of the PureGeo organic material may alter the above listed properties*

PRODUCT
TECHNICAL
SPECIFICATION

FTHD-2-PureFill

Property	Value	Units	ASTM
Product Stock Code	FTHD-2-PureFill		
Pile Yarn Type	UV-resistant polyethylene		n/a
Yarn Structure	Slit-Film		n/a
Yarn Denier	10800	Denier	D1577
Tape Thickness	130	Microns	D3218
Pile Height	2	inches	D5823
Pile Weight	30	oz/yd^2	D5848
Primary Backing Weight	7+	oz/yd^2	D5848
Secondary Backing Weight (Finger-Unit)	14+	oz/yd^2	D5848
Total Weight	51	oz/yd^2	D5848
Stitch Gauge	3/4 inch centers		D5793
Tuft Bind	8+	lbs/force	D1335
Grab Tear Length	>200	lbs/force	D5034
Grab Tear Width	>200	lbs/force	D5034
Pill Burn Test	Pass		D2859
Impact Attenuation (Gmax)	<200	gmax	F1936
Water Permeability	>40	inch/hour	DIN 18-035
Cork 1-2 Infill	0.75	Lbs/ft2	
Sand	4.5	Lbs/ft2	
VersaTile Drainage/Shock Pad	13	mm	

Variation of +/- 5% on above listed property values is within normal manufacturing tolerances

PRODUCT
TECHNICAL
SPECIFICATION

FTHD-57-PureFill

Property	Value	Units	ASTM
Product Stock Code	FTHD-57-PureFill		
Pile Yarn Type	UV-resistant polyethylene		n/a
Yarn Structure	Slit-Film		n/a
Yarn Denier	10800	Denier	D1577
Tape Thickness	130	Microns	D3218
Pile Height	2.25	inches	D5823
Pile Weight	33	oz/yd^2	D5848
Primary Backing Weight	7+	oz/yd^2	D5848
Secondary Backing Weight (Finger-Unit)	14+	oz/yd^2	D5848
Total Weight	54	oz/yd^2	D5848
Stitch Gauge	3/4 inch centers		D5793
Tuft Bind	8+	lbs/force	D1335
Grab Tear Length	>200	lbs/force	D5034
Grab Tear Width	>200	lbs/force	D5034
Pill Burn Test	Pass		D2859
Impact Attenuation (Gmax)	<200	gmax	F1936
Water Permeability	>40	inch/hour	DIN 18-035
Cork 1-2 Infill	1	Lbs/ft2	
Sand	4.5	Lbs/ft2	
VersaTile Drainage/Shock Pad	13	mm	

Variation of +/- 5% on above listed property values is within normal manufacturing tolerances

PRODUCT
TECHNICAL
SPECIFICATION

FTRV-2-PureFill

Property	Value	Units	ASTM
Product Stock Code	FTRV-2-PureFill		
Pile Yarn Type	UV-resistant polyethylene		n/a
Yarn Structure	Ridged Monofilament		n/a
Yarn Denier	10800	Denier	D1577
Tape Thickness	235	Microns	D3218
Pile Height	2	inches	D5823
Pile Weight	34	oz/yd^2	D5848
Primary Backing Weight	7+	oz/yd^2	D5848
Secondary Backing Weight (Finger-Unit)	14+	oz/yd^2	D5848
Total Weight	55	oz/yd^2	D5848
Stitch Gauge	3/4 inch centers		D5793
Tuft Bind	8+	lbs/force	D1335
Grab Tear Length	>200	lbs/force	D5034
Grab Tear Width	>200	lbs/force	D5034
Pill Burn Test	Pass		D2859
Impact Attenuation (Gmax)	<200	gmax	F1936
Water Permeability	>40	inch/hour	DIN 18-035
Cork 1-2 Infill	0.75	Lbs/ft2	
Sand	4.5	Lbs/ft2	
VersaTile Drainage/Shock Pad	13	mm	

Variation of +/- 5% on above listed property values is within normal manufacturing tolerances

PRODUCT
TECHNICAL
SPECIFICATION

FTRV360-2-PureFill

Property	Value	Units	ASTM
Product Stock Code	FTRV360-2-PureFill		
Pile Yarn Type	UV-resistant polyethylene		n/a
Yarn Structure	Ridged Monofilament		n/a
Yarn Denier	14500	Denier	D1577
Tape Thickness	380	Microns	D3218
Pile Height	2	inches	D5823
Pile Weight	36	oz/yd^2	D5848
Primary Backing Weight	7+	oz/yd^2	D5848
Secondary Backing Weight (Finger-Unit)	14+	oz/yd^2	D5848
Total Weight	57	oz/yd^2	D5848
Stitch Gauge	3/4 inch centers		D5793
Tuft Bind	8+	lbs/force	D1335
Grab Tear Length	>200	lbs/force	D5034
Grab Tear Width	>200	lbs/force	D5034
Pill Burn Test	Pass		D2859
Impact Attenuation (Gmax)	<200	gmax	F1936
Water Permeability	>40	inch/hour	DIN 18-035
Cork 1-2 Infill	0.75	Lbs/ft2	
Sand	4.5	Lbs/ft2	
VersaTile Drainage/Shock Pad	13	mm	

Variation of +/- 5% on above listed property values is within normal manufacturing tolerances

Issue Date: 09/01/15

PRODUCT
TECHNICAL
SPECIFICATION

FTRV-57-PureFill

Property	Value	Units	ASTM
Product Stock Code	FTRV-57-PureFill		
Pile Yarn Type	UV-resistant polyethylene		n/a
Yarn Structure	Ridged Monofilament		n/a
Yarn Denier	10800	Denier	D1577
Tape Thickness	235	Microns	D3218
Pile Height	2.25	inches	D5823
Pile Weight	36	oz/yd^2	D5848
Primary Backing Weight	7+	oz/yd^2	D5848
Secondary Backing Weight (Finger-Unit)	14+	oz/yd^2	D5848
Total Weight	57	oz/yd^2	D5848
Stitch Gauge	3/4 inch centers		D5793
Tuft Bind	8+	lbs/force	D1335
Grab Tear Length	>200	lbs/force	D5034
Grab Tear Width	>200	lbs/force	D5034
Pill Burn Test	Pass		D2859
Impact Attenuation (Gmax)	<200	gmax	F1936
Water Permeability	>40	inch/hour	DIN 18-035
Cork 1-2 Infill	1	Lbs/ft2	
Sand	4	Lbs/ft2	
VersaTile Drainage/Shock Pad	13	mm	

Variation of +/- 5% on above listed property values is within normal manufacturing tolerances

Issue Date: 12/19/14

PRODUCT TECHNICAL SPECIFICATION

FTVT-50-PureFill

Property	Value	Units	ASTM
Product Stock Code	FTVT-50-PureFill		
Pile Yarn Type	UV-resistant polyethylene		n/a
Yarn Structure 1	Ridged Monofilament Field Green		n/a
Yarn Denier 1	10800	Denier	D1577
Yarn Structure 2	Slit-Film Summergreen		
Yarn Denier 2	5000	Denier	
Pile Height	2	inches	D5823
Pile Weight	35	oz/yd^2	D5848
Primary Backing Weight	7+	oz/yd^2	D5848
Secondary Backing Weight (Finger-Unit)	14+	oz/yd^2	D5848
Total Weight	56	oz/yd^2	D5848
Stitch Gauge	3/4 inch centers		D5793
Tuft Bind	8+	lbs/force	D1335
Pill Burn Test	Pass		D2859
Water Permeability	>40	inch/hour	DIN 18-035
PureFill Cork	0.75	lbs/ft2	
Sand	4.5	lbs/ft2	
VersaTile Drainage/Shockpad	13	mm	

Variation of +/- 5% on above listed property values is within normal manufacturing tolerances

PRODUCT TECHNICAL SPECIFICATION

FTVT-57-PureFill

Property	Value	Units	ASTM
Product Stock Code	FTVT-57-PureFill		
Pile Yarn Type	UV-resistant polyethylene		n/a
Yarn Structure 1	Ridged Monofilament Field Green		n/a
Yarn Denier 1	10800	Denier	D1577
Yarn Structure 2	Slit-Film Summergreen		
Yarn Denier 2	5000	Denier	
Pile Height	2.25	inches	D5823
Pile Weight	38	oz/yd^2	D5848
Primary Backing Weight	7+	oz/yd^2	D5848
Secondary Backing Weight (Finger-Unit)	14+	oz/yd^2	D5848
Total Weight	59	oz/yd^2	D5848
Stitch Gauge	3/4 inch centers		D5793
Tuft Bind	8+	lbs/force	D1335
Pill Burn Test	Pass		D2859
Water Permeability	>40	inch/hour	DIN 18-035
PureFill Cork	1	lbs/ft2	
Sand	4.5	lbs/ft2	
VersaTile Drainage/Shockpad	13	mm	

Variation of +/- 5% on above listed property values is within normal manufacturing tolerances

PRODUCT TECHNICAL SPECIFICATION

FTVTP-50-PureFill

Property	Value	Units	ASTM
Product Stock Code	FTVTP-50-PureFill		
Pile Yarn Type	UV-resistant polyethylene		n/a
Yarn Structure 1	Ridged Monofilament Field Green		n/a
Yarn Denier 1	10800	Denier	D1577
Yarn Structure 2	Slit-Film Summergreen		
Yarn Denier 2	5000	Denier	
Pile Height	2	inches	D5823
Pile Weight	35	oz/yd^2	D5848
Primary Backing Weight	7+	oz/yd^2	D5848
Secondary Backing Weight (Finger-Unit)	14+	oz/yd^2	D5848
Total Weight	56	oz/yd^2	D5848
Stitch Gauge	3/4 inch centers		D5793
Tuft Bind	8+	lbs/force	D1335
Pill Burn Test	Pass		D2859
Water Permeability	>40	inch/hour	DIN 18-035
PureFill Cork	0.75	lbs/ft2	
Sand	4.5	lbs/ft2	
VersaTile Drainage/Shockpad	13	mm	

Variation of +/- 5% on above listed property values is within normal manufacturing tolerances

PRODUCT TECHNICAL SPECIFICATION

FTVTP-57-PureFill

Property	Value	Units	ASTM
Product Stock Code	FTVTP-57-PureFill		
Pile Yarn Type	UV-resistant polyethylene		n/a
Yarn Structure 1	Ridged Monofilament Field Green		n/a
Yarn Denier 1	10800	Denier	D1577
Yarn Structure 2	Slit-Film Summergreen		
Yarn Denier 2	5000	Denier	
Pile Height	2.25	inches	D5823
Pile Weight	38	oz/yd^2	D5848
Primary Backing Weight	7+	oz/yd^2	D5848
Secondary Backing Weight (Finger-Unit)	14+	oz/yd^2	D5848
Total Weight	59	oz/yd^2	D5848
Stitch Gauge	3/4 inch centers		D5793
Tuft Bind	8+	lbs/force	D1335
Pill Burn Test	Pass		D2859
Water Permeability	>40	inch/hour	DIN 18-035
PureFill Cork	1	lbs/ft2	
Sand	4.5	lbs/ft2	
VersaTile Drainage/Shockpad	13	mm	

Variation of +/- 5% on above listed property values is within normal manufacturing tolerances

PRODUCT
TECHNICAL
SPECIFICATION

Multi40-HD-PureFill

Property	Value	Units	ASTM
Product Stock Code	Multi40-HD-PureFill		
Pile Yarn Type	UV-resistant polyethylene		n/a
Yarn Structure	Slit-Film		n/a
Yarn Denier	10800	Denier	D1577
Tape Thickness	130	Microns	D3218
Pile Height	1.6	inches	D5823
Pile Weight	38	oz/yd^2	D5848
Primary Backing Weight	7+	oz/yd^2	D5848
Secondary Backing Weight	26	oz/yd^2	D5848
Total Weight	71	oz/yd^2	D5848
Stitch Gauge	3/8 inch centers		D5793
Tuft Bind	8+	lbs/force	D1335
Grab Tear Length	>200	lbs/force	D5034
Grab Tear Width	>200	lbs/force	D5034
Pill Burn Test	Pass		D2859
Impact Attenuation (Gmax)	<200	gmax	F1936
Water Permeability	>40	inch/hour	DIN 18-035
PureFill Cork Infill	0.5	Lbs/ft2	
Silica Sand Infill	4.5	Lbs/ft2	
VersaTile Shock and Drain Pad	13	mm	

Variation of +/- 5% on above listed property values is within normal manufacturing tolerances

PRODUCT
TECHNICAL
SPECIFICATION

Multi40-RV-PureFill

Property	Value	Units	ASTM
Product Stock Code	Multi40-RV-PureFill		
Pile Yarn Type	UV-resistant polyethylene		n/a
Yarn Structure	Ridged Monofilament		n/a
Yarn Denier	10800	Denier	D1577
Tape Thickness	235	Microns	D3218
Pile Height	1.6	inches	D5823
Pile Weight	38	oz/yd^2	D5848
Primary Backing Weight	7+	oz/yd^2	D5848
Secondary Backing Weight	26	oz/yd^2	D5848
Total Weight	71	oz/yd^2	D5848
Stitch Gauge	3/8 inch centers		D5793
Tuft Bind	8+	lbs/force	D1335
Grab Tear Length	>200	lbs/force	D5034
Grab Tear Width	>200	lbs/force	D5034
Pill Burn Test	Pass		D2859
Impact Attenuation (Gmax)	<200	gmax	F1936
Water Permeability	>40	inch/hour	DIN 18-035
PureFill Cork Infill	0.5	Lbs/ft2	
Silica Sand Infill	4.5	Lbs/ft2	
VersaTile Shock and Drain Pad	13	mm	

Variation of +/- 5% on above listed property values is within normal manufacturing tolerances

PRODUCT
TECHNICAL
SPECIFICATION

XM6-50-PureFill

Property	Value	Units	ASTM
Product Stock Code	XM6-50-PureFill		
Pile Yarn Type	UV-resistant polyethylene		n/a
Yarn Structure	Ridged Monofilament		n/a
Yarn Denier	10800	Denier	D1577
Tape Thickness	280	Microns	D3218
Pile Height	2	inches	D5823
Pile Weight	30	oz/yd^2	D5848
Primary Backing Weight	7+	oz/yd^2	D5848
Secondary Backing Weight (Finger-Unit)	14+	oz/yd^2	D5848
Total Weight	51	oz/yd^2	D5848
Stitch Gauge	3/4 inch centers		D5793
Tuft Bind	8+	lbs/force	D1335
Grab Tear Length	>200	lbs/force	D5034
Grab Tear Width	>200	lbs/force	D5034
Pill Burn Test	Pass		D2859
Impact Attenuation (Gmax)	<200	gmax	F1936
Water Permeability	>40	inch/hour	DIN 18-035
PureFill Cork Infill	0.75	Lbs/ft2	
Silica Sand Infill	4.5	Lbs/ft2	
VersaTile Shock and Drain Pad	13	mm	

Variation of +/- 5% on above listed property values is within normal manufacturing tolerances

PRODUCT
TECHNICAL
SPECIFICATION

XM6-57-PureFill

Property	Value	Units	ASTM
Product Stock Code	XM6-57-PureFill		
Pile Yarn Type	UV-resistant polyethylene		n/a
Yarn Structure	Ridged Monofilament		n/a
Yarn Denier	10800	Denier	D1577
Tape Thickness	280	Microns	D3218
Pile Height	2.25	inches	D5823
Pile Weight	33	oz/yd^2	D5848
Primary Backing Weight	7+	oz/yd^2	D5848
Secondary Backing Weight (Finger-Unit)	14+	oz/yd^2	D5848
Total Weight	54	oz/yd^2	D5848
Stitch Gauge	3/4 inch centers		D5793
Tuft Bind	8+	lbs/force	D1335
Grab Tear Length	>200	lbs/force	D5034
Grab Tear Width	>200	lbs/force	D5034
Pill Burn Test	Pass		D2859
Impact Attenuation (Gmax)	<200	gmax	F1936
Water Permeability	>40	inch/hour	DIN 18-035
PureFill Cork Infill	1	Lbs/ft2	
Silica Sand Infill	4.5	Lbs/ft2	
VersaTile Shock and Drain Pad	13	mm	

Variation of +/- 5% on above listed property values is within normal manufacturing tolerances

PRODUCT
TECHNICAL
SPECIFICATION

XT-50-PureFill

Property	Value	Units	ASTM
Product Stock Code	XT-50-PureFill		
Pile Yarn Type	UV-resistant polyethylene		n/a
Yarn Structure	Slit-Film		n/a
Yarn Denier	10000+	Denier	D1577
Tape Thickness	100+	Microns	D3218
Pile Height	2	inches	D5823
Pile Weight	30	oz/yd^2	D5848
Primary Backing Weight	7+	oz/yd^2	D5848
Secondary Backing Weight (Finger-Unit)	14+	oz/yd^2	D5848
Total Weight	51	oz/yd^2	D5848
Stitch Gauge	3/4 inch centers		D5793
Tuft Bind	8+	lbs/force	D1335
Grab Tear Length	>200	lbs/force	D5034
Grab Tear Width	>200	lbs/force	D5034
Pill Burn Test	Pass		D2859
Impact Attenuation (Gmax)	<200	gmax	F1936
Water Permeability	>40	inch/hour	DIN 18-035
PureFill Cork Infill	0.75	Lbs/ft2	
Silica Sand Infill	4.5	Lbs/ft2	
VersaTile Shock and Drain Pad	13	mm	

Variation of +/- 5% on above listed property values is within normal manufacturing tolerances

PRODUCT
TECHNICAL
SPECIFICATION

XT-57-PureFill

Property	Value	Units	ASTM
Product Stock Code	XT-57-PureFill		
Pile Yarn Type	UV-resistant polyethylene		n/a
Yarn Structure	Slit-Film		n/a
Yarn Denier	10000+	Denier	D1577
Tape Thickness	100+	Microns	D3218
Pile Height	2.25	inches	D5823
Pile Weight	33	oz/yd^2	D5848
Primary Backing Weight	7+	oz/yd^2	D5848
Secondary Backing Weight (Finger-Unit)	14+	oz/yd^2	D5848
Total Weight	54	oz/yd^2	D5848
Stitch Gauge	3/4 inch centers		D5793
Tuft Bind	8+	lbs/force	D1335
Grab Tear Length	>200	lbs/force	D5034
Grab Tear Width	>200	lbs/force	D5034
Pill Burn Test	Pass		D2859
Impact Attenuation (Gmax)	<200	gmax	F1936
Water Permeability	>40	inch/hour	DIN 18-035
PureFill Cork Infill	1	Lbs/ft2	
Silica Sand Infill	4.5	Lbs/ft2	
VersaTile Shock and Drain Pad	13	mm	

Variation of +/- 5% on above listed property values is within normal manufacturing tolerances

FieldTurf
A Tarkett Sports Company

THE ULTIMATE
SURFACE EXPERIENCE

PUREFILL CORK MATERIAL SPECIFICATION

Property	Test Method	Unit	Range
Size	See Table	mm	0.6-3.15
Bulk Density	EN 1097-3	kg/m3	250 +/- 15%
Size analysis		%	See table
NET (mm)		*WEIGHT (gr)*	*PERC. (%)*
3.15			0 - 15
2.50			0 - 40
2.00			10 - 50
1.60			20 - 60
1.00			10 - 40
0.6			5 - 20
0.5			0 - 5
<0.5			0 - 5

The exact color of the PureFill infill may vary from submitted samples as it is a natural cork product.

FieldTurf
A Tarkett Sports Company
THE ULTIMATE SURFACE EXPERIENCE

OLIVE CORES 10-30 MATERIAL SPECIFICATION

Test Method	Property	Unit	Range
ISO 2031	Bulk Density	kg/l	0.70 - 0.80
ASTM D792	Specific Gravity	-	1.20 - 1.45
ISO 2030	Size Analysis by Mechanical Sieving	%	*see table*
	(mesh)	***(mm)***	***% retention***
	8	2.36	0-2
	10	2.00	0-10
	12	1.70	0-20
	14	1.40	0-30
	16	1.18	10-20
	20	0.85	10-20
	30	0.60	0-10
	40	0.42	0-10
	50	0.30	0-2
	Under 50	< 0.30	0-2

PDS

PRECISION DRAINAGE SYSTEM

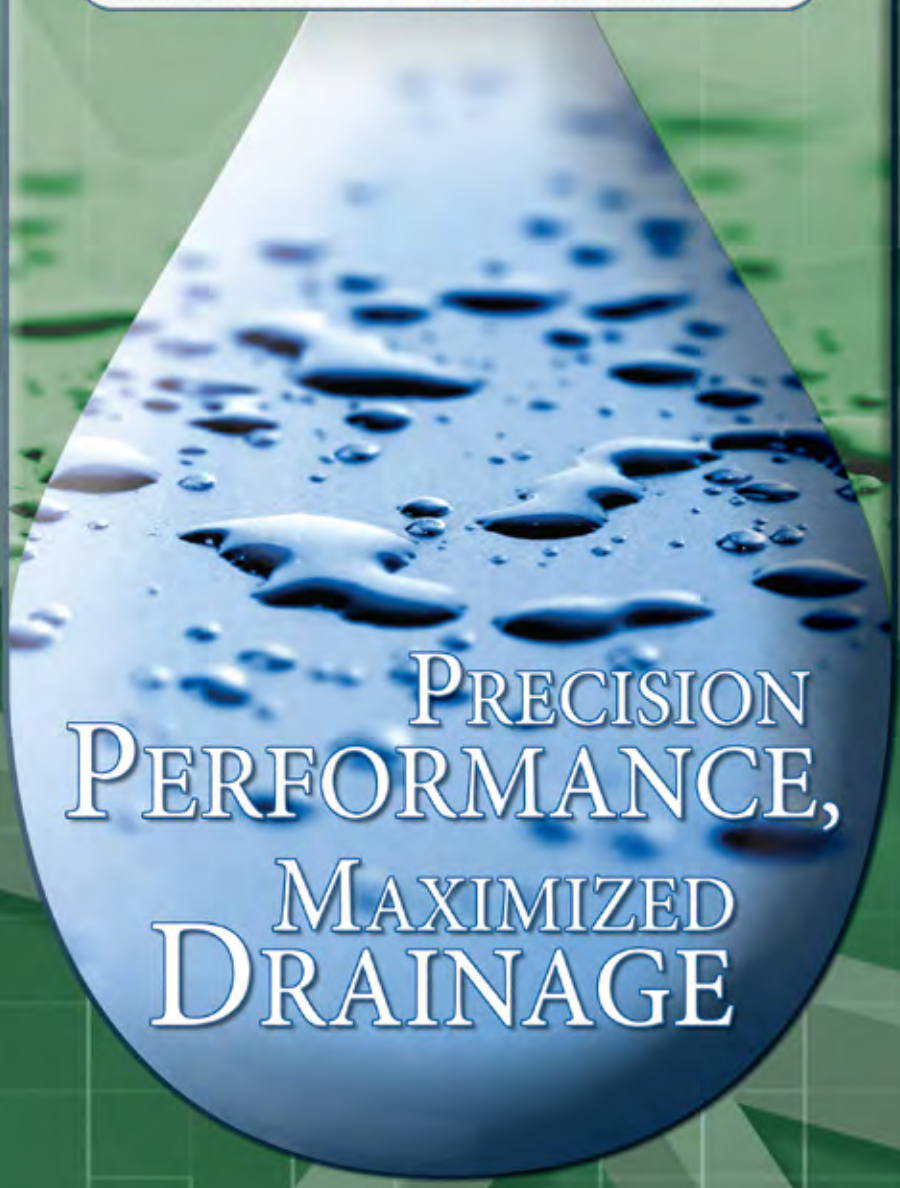

PRECISION PERFORMANCE, MAXIMIZED DRAINAGE

FieldTurf Tarkett

UNITED IN SPORT

PDS

PRECISION DRAINAGE SYSTEM

PDS delivers the Precision Performance and Maximized Drainage that the player and the facility demand. Consistent response throughout the field ensures that elite levels of play can always be reached. Maximizing the drainage ensures the on field performance when the weather gets tough. Wet or dry your level of play remains the same. The installation of the PDS system is user friendly and reduces base installation time by approximately 30% while reducing base costs by up to 50%. Your players and facility demand the best. PDS delivers.

The PDS Concept

- The organic grass is stripped and the natural soil or fill is compacted to 95% proctor.
- A 3" base of 0"-1/4" road stone is laser graded and compacted to 95% proctor.
- A non-permeable liner covers the PDS base and the bottom of the trench.
- The PDS tile is installed on the liner and across the trench.
- FieldTurf is installed over the tile.
- Water flows through the turf and tile onto the liner and then into the drains.

PDS The Complete System

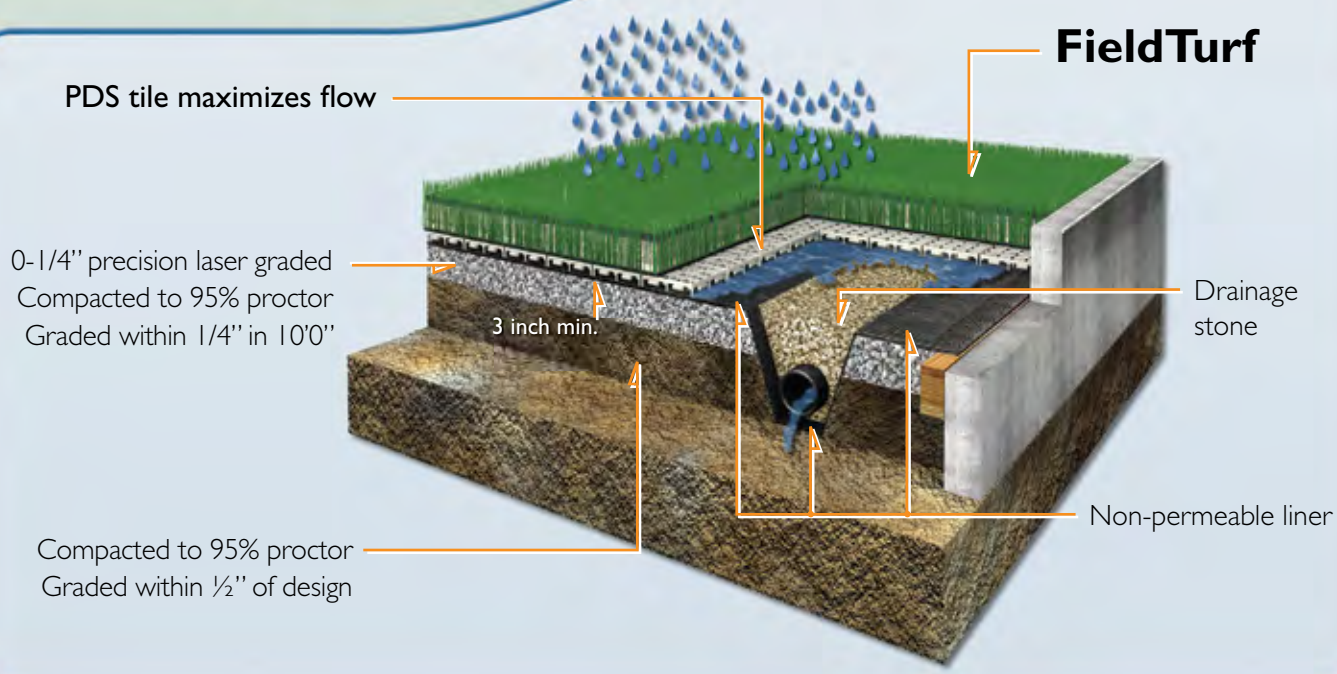

Precision Performance, Maximized Drainage

Precision Performance

- Field Consistency
  - The PDS tile ensures the same performance response at every spot on the field.
  - A single tile is composed of 64 small squares that conform to the field, eliminating bridging.
  - No matter where you are on the field the turf is sitting on the same performance surface… the PDS tile.

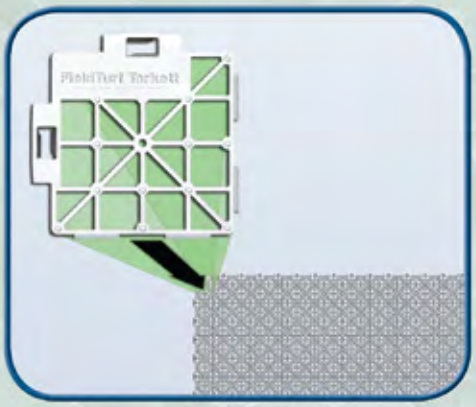

The PDS tile is composed of 64 small squares to eliminate bridging.

- Exceptional Load Bearing Capacity
  - At 164 psi, the load bearing capacity of the tile is 4.3 times greater than other competitive technologies.
  - The PDS tile respects a design safety factor of 2.7 and delivers the long term performance that a field deserves. Using the same performance benchmark factor, some competitive products have a design safety factor of 0.62.
  - The number of legs has been optimized and the Roman arches distribute stresses to ensure the long term performance of the field.

- Thermal Expansion and Contraction
  - The PDS tile is equipped with 64 mini squares designed with a total of 224 bidirectional thermal expansion U-joints that will expand and contract with changes in temperature.
  - Once the turf and infill are in place they act as an insulator and therefore only small levels of expansion and contraction need be addressed. The turf will remain "true" to its alignment.

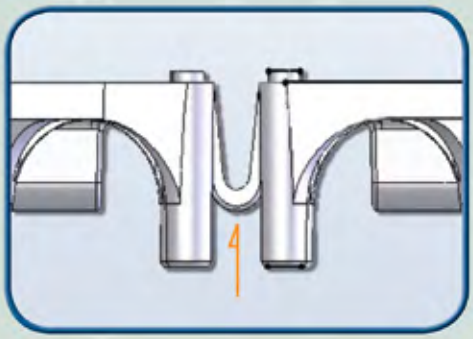

224 bidirectional thermal expansion joints ensure that your field remains flat.

Maximized Drainage

- Maximized Volume Voids
  - PDS tile volume voids are 84%.
  - Typical competitive products have approximately 35% voids.
  - The PDS tile will consistently deliver drainage since it never gets in the way of the water flow.

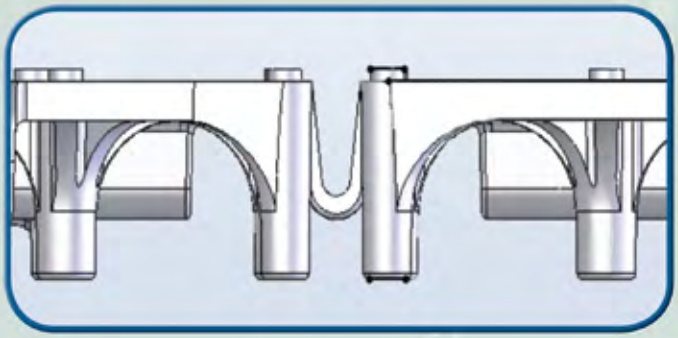

The design of the tile delivers 84% voids for unmatched vertical and horizontal drainage.

Precision Performance

- Tri-Axial Design
  - The 0°/90°/±45° design resists bending and twisting.
  - Furthermore, the small "grid" pattern eliminates "dips" in the turf.
  - Rugged and free of "dips". Performance day in and day out.

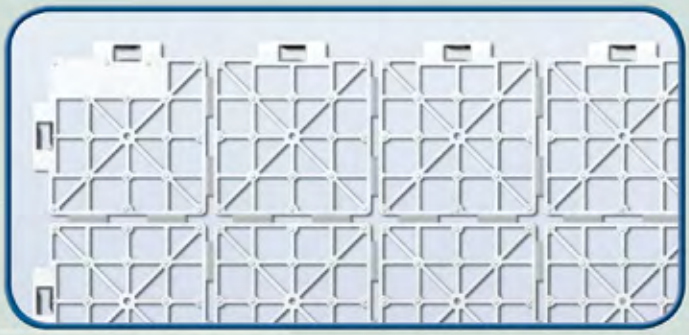

The 0°/90°/±45° design of the PDS tile resists bending and twisting.

- Turf Grip
  - The small "bumps" and the edges of the tri-axial design will keep the turf in place.

Keep in mind that our patented 10 lbs/ft^2 of infill also acts as a ballast, delivering sure footed performance.

- Unequalled Vertical Permeability
  - The surface voids are 71% ensuring that the water will flow vertically through the turf / tile system.
  - Some competitive products act like a surface - potentially causing surface drainage in heavy rainfall situations.
  - The PDS tile never holds back the water.
- Unparalleled Horizontal Transmissitivity
  - By optimizing the number and the height of the legs the horizontal transmissitivity is second to none.
  - The PDS tile drains at least 150 times greater than some typical competitive product.

Precision Performance, Maximized Drainage

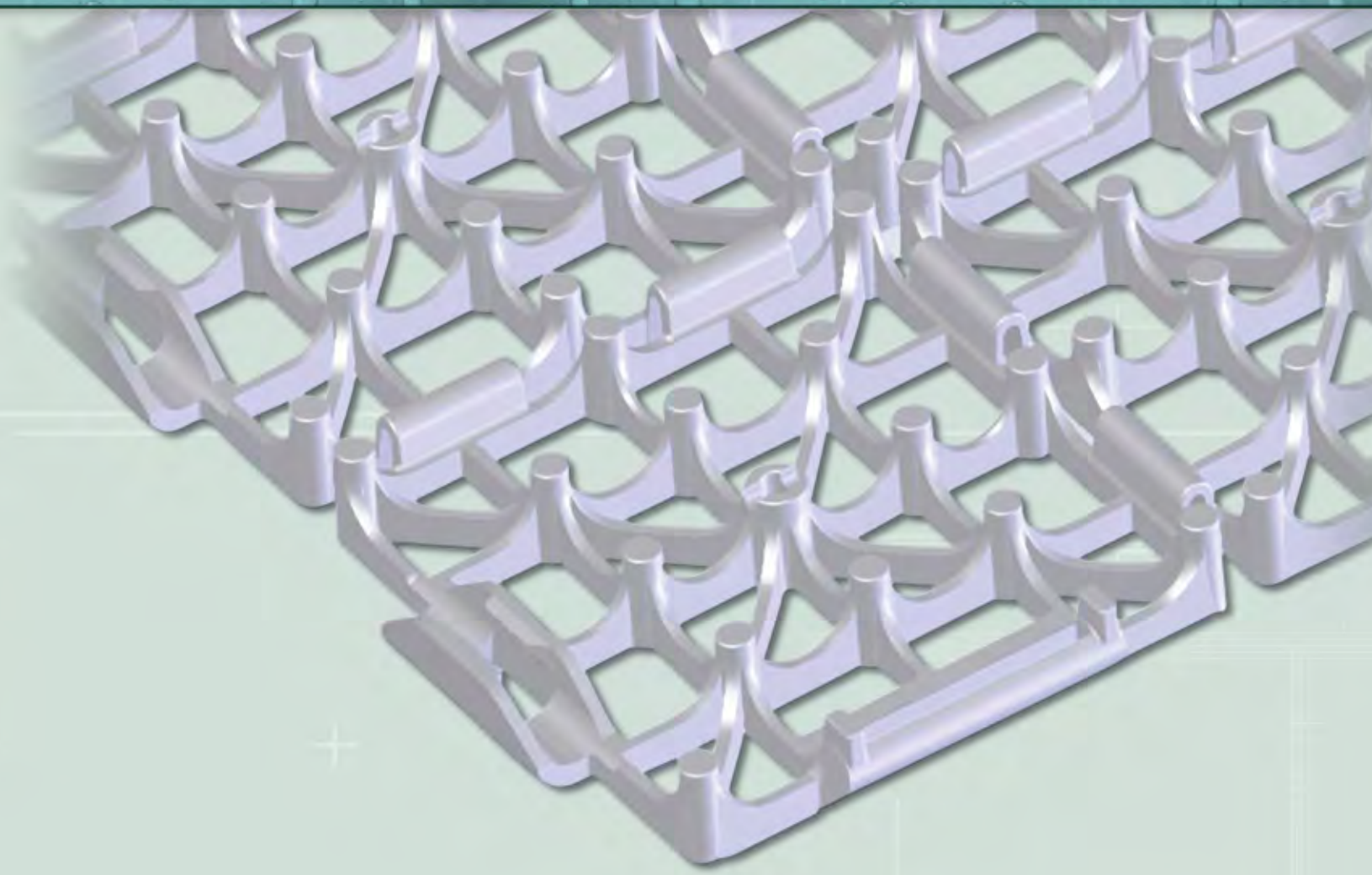

Outstanding Puncture Resistance

- There are 1,088 legs over a 3.92 ft^2 surface (1.93 legs/in^2 and 19% leg area/in^2) minimizing local load concentration.
- Like the magic of a bed of nails, the legs distribute the load to prevent puncture.
- The bottom edge of each leg has been slightly beveled so no sharp edges come in contact with the liner.
- Finally, the liner is supported by the 3" stone base and therefore will not be punctured.

Installation Friendly

- The lightweight design is easy to handle which speeds up the installation.
- The 8 "Smart Clips" on each side of the tile provide a firm positive lock.
- The beveled Smart Clip "teeth" allow for easy tile removal by simply twisting one clip away from the cylinder.
- The small rotation designed into the Smart Clips allows the installer to roll up the tile and temporarily place it aside if required.

Reduced Installation Time

- A base can be installed in approximately 30% less time than traditional stone bases.
- Less exposure to the elements, and reduced installation time leads to increased installation capacity.

Minimized Base Cost

- The PDS system can save up to 50% on the cost of a base.

Laser grade and compact to 95% proctor

Install non-permeable liner

Install PDS tiles across center of field

Align and snap Smart Clips

Install PDS tiles

Install Turf

LEED® Credits

How PDS Can Contribute To Obtaining **LEED®** Credits

FieldTurf Tarkett's Precision Drainage System can contribute towards obtaining LEED Credits. In addition to the Precision Performance and Maximized Drainage built into this system, the industry's most innovative drainage system has a positive effect on the environment.

Sustainable Site

Credit 5.1: Reduced Site Disturbance; protect or restore open space

Credit 5.2: Reduced Site Disturbance; development footprint

Credit 7.1: Landscape and Exterior Design to Reduce Heat Islands; roof

Water Efficiency Credit

Credit 1.1: Water Efficient Landscaping; reduce by 50%

Credit 1.2: Water Efficient Landscaping; no potable water or no landscaping

Credit 2: Innovative Wastewater Technologies

Credit 3.1: Water Use Reduction; reduce by 20%

Credit 3.2: Water Use Reduction; reduce by 30%

Materials and Resources

Credit 3.1 and 3.2: Resource Reuse; Specify 5% to 10%

Credit 4.1 and 4.2: Recycled Content; Specify 25% to 50%

Credit 5.1: Local/Regional Materials; 20% Manufactured Locally

Energy & Atmosphere Credits

Credit 1.1–1.5: Optimize Energy Performance; 20–60% New/ 10–50% Existing

US GREEN BUILDING COUNCIL

LEED VERSION 2.2

FieldTurf Tarkett
UNITED IN SPORT

PDS

PRECISION DRAINAGE SYSTEM

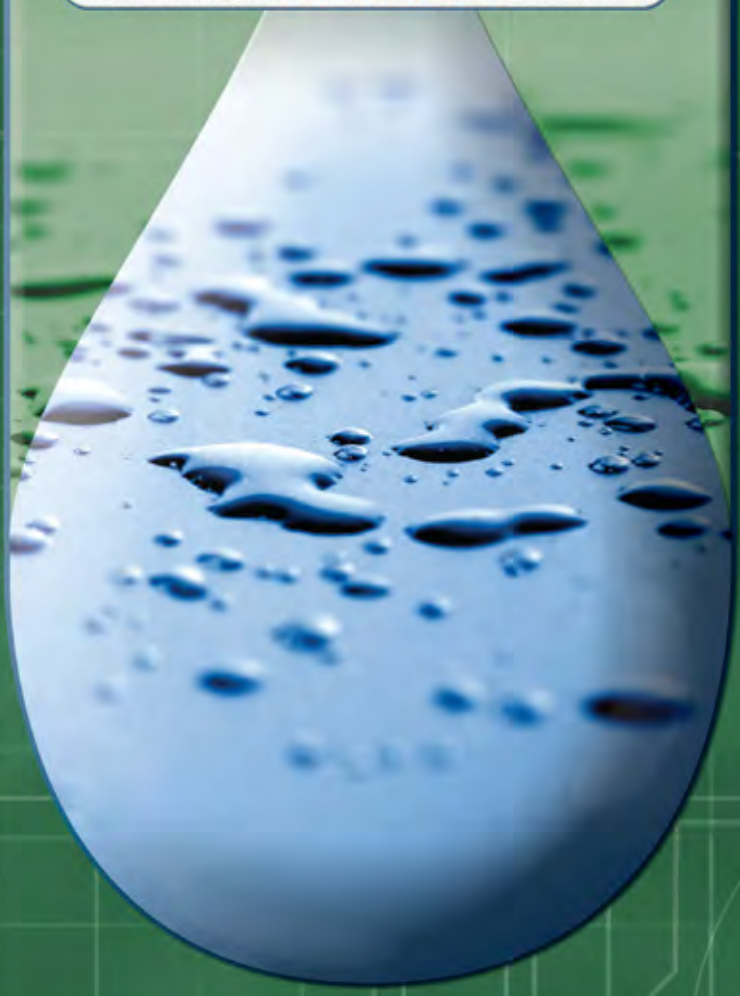

FieldTurf Tarkett

UNITED IN SPORT

8088 Montview, Montreal, Quebec Canada H4P 2L7
Tel. (514) 340-9311 | (800) 724-2969 | Fax. (514) 340-9374
info@fieldturftarkett.com | www.fieldturftarkett.com

E-LAYER (25mm)

Product Specifications

PART 1 – GENERAL

1.1 SUMMARY

A. Product Name: E-Layer.

B. Product Description: Pour-in-place, permeable, synthetic field surface base consisting of rubber granules, gravel aggregate and polyurethane binder.

C. Scope of Work: Furnish all required labor, materials and equipment to successfully install the specified synthetic field surface base.

1.2 RELATED WORK

A. Earthwork
B. Drainage
C. Asphaltic Concrete Paving
D. Cast-in-Place Concrete
E. Synthetic Turf

1.3 REFERENCE STANDARDS

A. The work shall conform to the standards for field construction as prescribed or approved by the appropriate governing body; NFHS, NCAA, or IAAF.

1.4 SUBMITTALS

A. Product Data
B. Warranty

1.5 QUALITY ASSURANCE

A. Synthetic surfacing contractor (SSC) shall be licensed and bonded and possess a valid contractor's license in the state where Work is performed.

B. SSC shall have a minimum of 5 years experience installing the specified permeable base surface under the same corporate name as current operations.

1.6 PROJECT CONDITIONS

A. SSC, General Contractor (GC) and/or Owner, shall conduct a pre-construction meeting to review project conditions prior to dispatch of the SSC's installation team.

B. Permeable Surface Sub-Base.
   1. The field sub-base shall meet the standards set by the Architect/Engineer and described in the product specifications.
   2. Repair work required on the base shall be approved by the Architect/Engineer.
   3. GC and/or Owner shall be responsible to protect the field sub-base from activities and traffic that may damage the sub-base prior to application.

C. Weather
   1. Apply the permeable field base surface only during favorable weather conditions.
   2. No application of the permeable field base surface shall be conducted during rainfall, when rain is imminent, when freezing temperatures are forecasted or exist, or when gusting winds are occurring.
   3. Work is to progress only when the SSC can guarantee successful cure of the materials.

D. During field base surface installation, all irrigation systems shall be shut-off or controlled so that no water falls on the field areas.

E. During set-up and installation, the GC and/or Owner shall be responsible to have the entire field and other pertinent areas closed and secured of all activities 24 hours per day until completion of the project.

1.7 WARRANTY

A. Manufacturer's and Installer's Warranty
   1. The warranty on the permeable base surface shall endure for eight (8) years from completion of installation.
   2. The warranty is to be provided directly by the SSC to the Owner.
   3. The warranty shall cover defects in materials and workmanship not deemed as ordinary wear on a synthetic field.

.

B. Warranty Bond not required.

PART 2 – PRODUCTS

2.1 MANUFACTURERS

A. Beynon Sports Surfaces, Inc., 19600 SW 129th Ave., Ste A, Tualatin, OR 97092, Tel: 503-691-2484, Fax: 503-692-0491, www.beynonsports.com

2.2 MATERIALS

A. Aggregate
   1. Birds Eye Pea Gravel with a 3.0-6.0mm gradation.
   2. Pea gravel shall be clean, washed and dry.
B. Rubber
   1. SBR granules with a 1.0-5.0mm gradation.
C. Binder
   1. Permeable base binder shall be polyurethane moisture cure, MDI based, 100% solids.

PART 3 – EXECUTION

3.1 EXAMINATION

A. SSC shall examine project conditions to ensure successful installation of the permeable field base surface. Any deficiencies shall be reported to the GC and/or Owner for corrective action.

3.2 PREPARATION

B. SSC to protect adjacent areas from contamination of permeable field base surfacing materials due to installation procedures.

3.3 INSTALLATION

A. Permeable Field Surface Base
   1. The permeable field surface base will be applied to a minimum depth of 25 mm.
   2. The permeable surface base shall consist of 6% binder, 47% rubber granule and 47% aggregate, by weight.
   3. The materials shall be prepared in a mechanical mixer, to assure complete coverage of each particle by the binding agent, and mixed until a homogenous mixture is obtained.
   4. Mixed materials shall be applied to the field sub-base surface by a mechanically operated finishing machine which shall have an electrically heated screed.

3.4 CLEANING

A. Upon completion of work remove all containers, surplus materials, and installation debris.

B. Leave area of work in clean orderly condition ready for synthetic field application.

ProPlay-Sport23D

Technical data sheet

ProPlay-Sport23D professionally designed as a sport technical performance layer for artificial turf sports fields.

Vertical and Horizontal drainage!
As well as the necessary sport technical performance characteristics, the ProPlay-Sport23D has additional (in-plane) drainage channels which ensure adequate gradient drainage of water to complement the vertical drainage capability and in case the artificial turf system is to be built on a sealed or subsequently underperforming existing sub base.

For a prompt installation, the ProPlay-Sport23D is supplied as interlocking panels which are equipped with expansion slots. The installation guide can be downloaded at our website (www.schmitzfoam.com) or available upon request from our sales department.

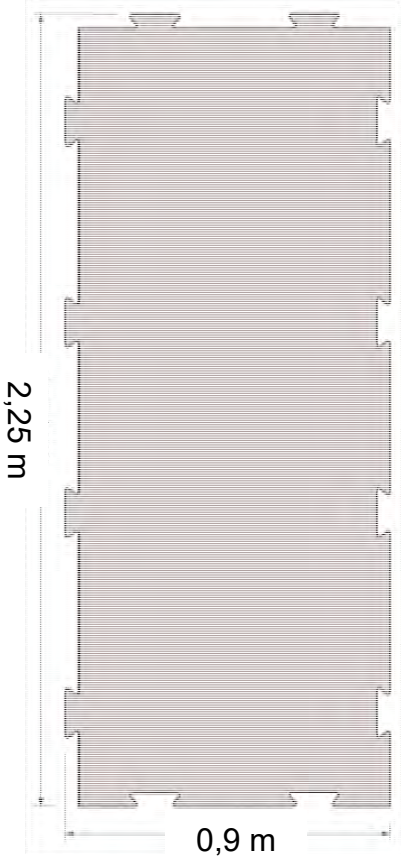

Physical characteristics

ProPlay-Sport23D consists of thermal bonded (closed-celled) cross-linked Polyethylene foam (PEX). This foam originates from production residues and contains no contaminants. ProPlay-Sport23D is fully tested based on microbiological resistance (according EN 12225) resistance to: weathering (according EN 12224), oxidation (according EN-ISO 13438), acids & bases (according EN 14030). The predicted durability of PEX is a 100 years minimum (according ISO/TR 13434).

ProPlay-Sport23D is tested by simulated mechanical wear using the Lisport wear test. Even after 65.000 cycles (Lisport simulated average 30* year usage) there are hardly any differences in sport technical characteristics (SA,VD, HIC).

The ProPlay-Sport23D is tested on simulated ageing weatherability according EN 13744 and EN 13817. This ageing test has virtually no influence on the dimensional properties of ProPlay-Sport23D.

* based on 1 cycle = 1 hour of usage and 2080 hours of usage per year (average usage of 52 weeks a year and 40 hrs a week)

Technical data

Physical			
Thickness at 2 kPa load	23	mm	
Mass per unit area	4,0	kg/m²	
Tensile strength	0,26	MPa	EN 12230 / ASTM D 3575
Performance			
Force reduction	58	%	AAA*
Energy restitution	41	%	AAA*
Vertical deformation	6,6	%	AAA*
Critical fall height (Head Injury Criterion ~ 1000)	0,85	m	EN 1177 / ASTM F 1292
Impact attenuation [gmax] **	80-110		ASTM F 355-A
Drainage and isolation			
Water infiltration rate [IA]	72000	mm/hr	EN 12616
Thermal conductivity [λ10]	0,05	W/m.K	EN 12667 / ASTM C 177
(resulting) Thermal resistance [R-value]	460	m².K/W	EN 12667 / ASTM C 177

* AAA = Advanced Artificial Athlete
** Results will vary depending on actual field configuration and final cross-section design

Drainage graph

Drainage distance [m] versus rainfall [mm/h] at different gradients. Measured according to the LND method.

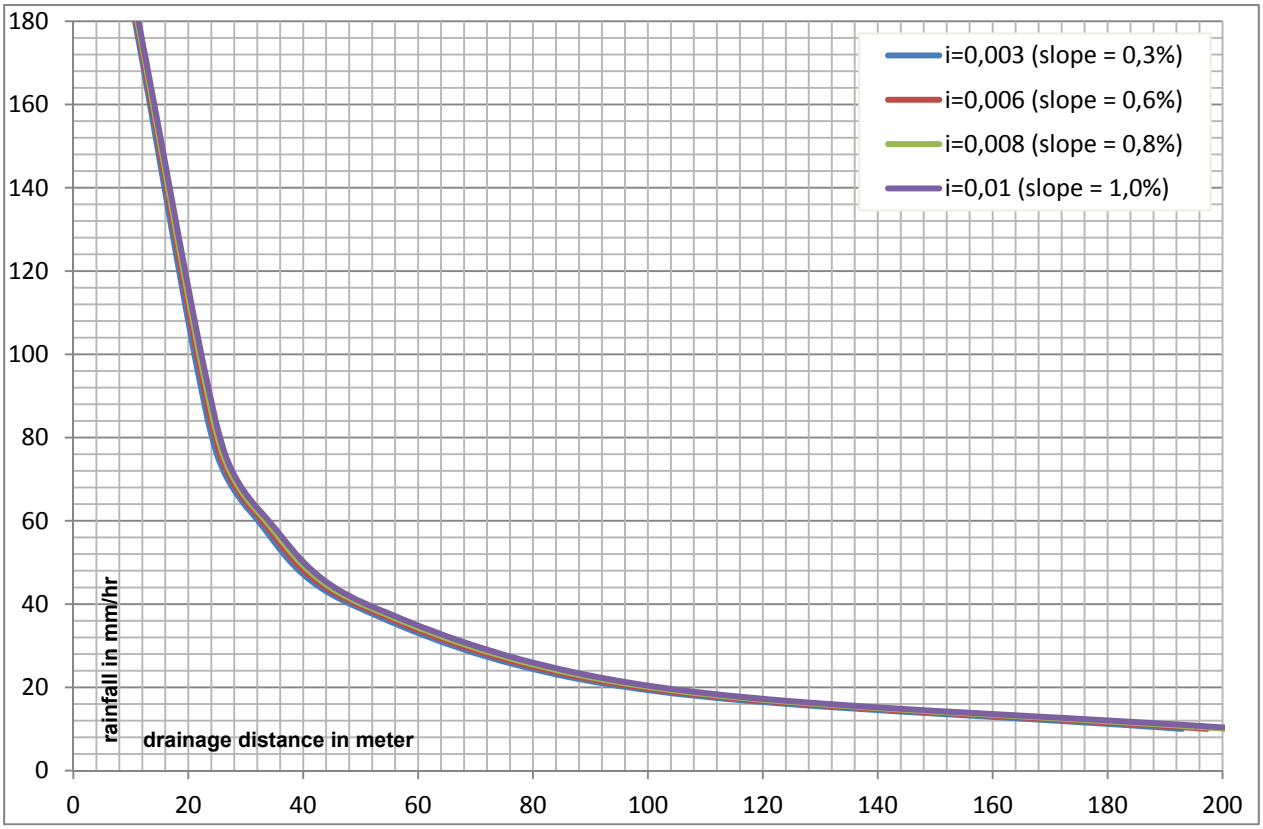

The provided information is, to the best of our knowledge, true and accurate (at the time of revision). This information is based on (independent) measurements and (where possible) based on average values, measured over a long and representative period. Additional information (e.g. additional characteristics, specific (independent) reports or statistical analysis) is available upon request. Schmitz Foam Products is allowed to change this information and/or the product (without notice) and assumes no legal responsibility for use of and/or reliance on this information.

FieldTurf USA Inc

SportLite™ HD23SL-NW3-SG

SportLite™, developed by ThermaGreen Environmental, is the Shock & Drainage pad for top quality synthetic turf systems. Our pad is manufactured in North America, approved under the NAFTA agreement, and is produced by re-purposing virgin non-contaminated post-industrial cross-linked (closed cell) PEX foam. It is bonded to a non-woven geotextile to create a pad that accommodates the various demands of different sports.
ThermaGreen Sport products meet energy absorption standards under ASTM F355-10a for HIC and G_{MAX}. SportLite™ does not contain or use any toxic substances (i.e. CFC & HCFC) during the manufacturing process; it has passed California Proposition 65 and the Synthetic Precipitation Leaching Procedure (SPLP) for metals, and is compliant under NSF 61 US/Canadian drinking water quality. It is inert, environmentally friendly, resistant to mold and most chemicals (including petroleum products), and helps you obtain LEED credits!

TESTED PROPERTY	TESTED METHOD	TYPICAL VALUES	
		SI units	Imperial units
FOAM / GEOTEXTILE COMPOSITE			
Mass per Unit Area	ASTM D3776M-09a	3.9 kg/m²	0.8 lb/ft²
Overall Density	ASTM D3575-08-W (A)	168 kg/m³	10.5 lb/ft³
Ply Adhesion (200mm wide specimen)	ASTM D7005-03 mod	0.2 kN/m	1.3 lbf/in
Thermal Stability	ASTM D3575-08-S	< 0.5 %	< 0.5 %
PERFORMANCE PROPERTIES			
Compression Set	ASTM D3575-08-B	8.2 %	8.2 %
Compressive Strength at 25% Deflection	ASTM D3575-08-D	150 kPa	22 psi
In-Plane Flow Rate (1)	ASTM D4716M-14	16.8 l/min/m	1.36 gal/min/ft
Water Permeability	ASTM D4491-99a (2014) el	1189/min/m²	29.2 gal/min/ft².
Shock Attenuation (2)	ASTM F355-10a	81 - 96 G_{MAX}	190 -218 HIC
GEOTEXTILE (prior to lamination)			
Grab Tensile Strength	ASTM D4632	400 N	90 lb
Grab Tensile Elongation	ASTM D4632	75 %	75 %
Tear Resistance	ASTM D4533	130 N	30 lb
Puncture Resistance	ASTM D6241	1100 N	250 lb
Permittivity	ASTM D4491	2.0 s^{-1}	2.0 s^{-1}
DURABILITY AND ENDURANCE PROPERTIES			
Residual properties after 4000 hours water immersion			
Compression Set	ASTM D5322-98 / D3575-08-B	100% retained	
Compressive Strength at 25% Deflection	ASTM D5322-98 / D3575-08-D	> 75% retained	
Residual properties after 4000 hours aging at 85°C/185°F			
Compressive Strength at 25% Deflection	ASTM D3045-92 / D3575-08-B	100% retained	
Compression Deflection	ASTM D3045-92 / D3575-08-D	> 75% retained	
DIMENSIONS			
Thickness +/-2 mm (0.08")	ASTM D5199-01	23 mm	7/8 in
Roll Weight	-	304 kg	672 lbs
Roll Width	-	1.22 m	4 ft
Roll Length (custom roll lengths available) +/-1%	-	62.48 m	205 ft
Roll Area	-	76.22 m²	820 ft²

(1) Hydraulic gradient 1% (0.01), compression strength of 10kPa (1.5 psi)
(2) Shock attenuation measured using Triax "A "Missile Tests - Results will vary depending on actual field configuration and final cross-section design

The technical information is provided by ThermaGreen and to the best of our knowledge, is true and accurate; ThermaGreen assumes no legal responsibility for use or reliance of data.

THERMAGREEN.COM
180 Bartor Road, Toronto, ON M9M 2W6
Phone: 416.782.5837 | Toll-Free: 1.877.782.4492
Fax: 416.782.2190
THERMA GREEN ENVIRONMENTAL

FieldTurf USA Inc

SportLite™ HD15SL-NW3-S

SportLite™, developed by ThermaGreen Environmental, is the Shock & Drainage Pad for top quality synthetic turf systems. Our pad is manufactured in North America, approved under the NAFTA agreement, and is produced by re-purposing virgin non-contaminated post-industrial cross-linked (closed cell) PEX foam. It is bonded to a non-woven geotextile to create a pad that accommodates the various demands of different sports.

ThermaGreen Sport products meet energy absorption standards under ASTM F355-10a for HIC and G_{MAX}. SportLite™ does not contain or use any toxic substances (i.e. CFC & HCFC) during the manufacturing process; it has passed California Proposition 65 and the Synthetic Precipitation Leaching Procedure (SPLP) for metals, and is compliant under NSF 61 US/Canadian drinking water quality. It is inert, environmentally friendly, resistant to mold and most chemicals (including petroleum products), and helps you obtain LEED credits!

TESTED PROPERTY	TESTED METHOD	TYPICAL VALUES	
		SI units	Imperial units
FOAM / GEOTEXTILE COMPOSITE			
Mass per Unit Area	ASTM D3776M-09a	2.7 kg/m²	0.57 lb/ft²
Overall Density	ASTM D3575-08-W (A)	139.8 kg/m³	8.7 lb/ft³
Ply Adhesion (200mm wide specimen)	ASTM D7005-03 mod	0.2 kN/m	1.3 lbf/in
Thermal Stability	ASTM D3575-08-S	< 0.24 %	< 0.24 %
Thermal Resistance	ISO 11092-1993ISO	15.01 r(m·K/W)	1.69 (R value)
PERFORMANCE PROPERTIES			
Compression Set	ASTM D3575-14	2.36%	2.36%
Compressive Strength at 25% Deflection	ASTM D3575-14	99 kPa	14 psi
Water Permeability (1)	ASTM D4491-99a (2014)	884 l/min/m²	21.7 gal/min/ft²
Shock Attenuation (2)	ASTM F355-10a	89 - 97 G_{MAX}	340 - 410 HIC
GEOTEXTILE (prior to lamination)			
Grab Tensile Strength	ASTM D4632	400 N	90 lb
Grab Tensile Elongation	ASTM D4632	75 %	75 %
Tear Resistance	ASTM D4533	130 N	30 lb
Puncture Resistance	ASTM D6241	1100 N	250 lb
Permittivity	ASTM D4491	2.0 s^{-1}	2.0 s^{-1}
DURABILITY AND ENDURANCE PROPERTIES			
Residual properties after 4000 hours water immersion			
Compression Set	ASTM D5322-98 / D3575-08-B	100% retained	
Compressive Strength at 25% Deflection	ASTM D5322-98 / D3575-08-D	> 75% retained	
Residual properties after 4000 hours aging at 85°C/185°F			
Compressive Strength at 25% Deflection	ASTM D3045-92 / D3575-08-B	100% retained	
Compression Deflection	ASTM D3045-92 / D3575-08-D	> 75% retained	
DIMENSIONS			
Thickness +/-2 mm (0.08")	ASTM D5199-01	15 mm	5/8 in
Roll Weight	-	233 kg	513 lbs
Roll Width	-	1.22 m	4 ft
Roll Length (custom roll lengths available) +/-1%	-	68.58 m	225 ft
Roll Area	-	83.67 m²	900 ft²

(1) Flow rate under 51mm hydraulic head
(2) Shock attenuation measured using Triax "A "Missile Tests - Results will vary depending on actual field configuration and final cross-section design

The technical information is provided by ThermaGreen and to the best of our knowledge, is true and accurate; ThermaGreen assumes no legal responsibility for use or reliance of data.

THERMAGREEN.COM
180 Bartor Road, Toronto, ON M9M 2W6
Phone: 416.782.5837 | Toll-Free: 1.877.782.4492
Fax: 416.782.2190
THERMA GREEN ENVIRONMENTAL

SportLite™ HD20SL-NW3-SG

SportLite™, developed by ThermaGreen Environmental, is the Shock & Drainage pad for top quality synthetic turf systems. Our pad is manufactured in North America, approved under the NAFTA agreement, and is produced by re-purposing virgin non-contaminated post-industrial cross-linked (closed cell) PEX foam. It is bonded to a non-woven geotextile to create a pad that accommodates the various demands of different sports.

ThermaGreen Sport products meet energy absorption standards under ASTM F355-10a for HIC and G_{MAX}. SportLite™ does not contain or use any toxic substances (i.e. CFC & HCFC) during the manufacturing process; it has passed California Proposition 65 and the Synthetic Precipitation Leaching Procedure (SPLP) for metals, and is compliant under NSF 61 US/Canadian drinking water quality. It is inert, environmentally friendly, resistant to mold and most chemicals (including petroleum products), and helps you obtain LEED credits!

TESTED PROPERTY	TESTED METHOD	TYPICAL VALUES	
		SI units	Imperial units
FOAM / GEOTEXTILE COMPOSITE			
Mass per Unit Area	ASTM D3776M-09a	4 kg/m²	0.6 lb/ft²
Overall Density	ASTM D3575-08-W (A)	168 kg/m³	10.5 lb./ft³
Ply Adhesion (200mm wide specimen)	ASTM D7005-03 mod	0.2 kN/m	1.3 lbf/in
Thermal Stability	ASTM D3575-08-S	< 0.5 %	< 0.5 %
Thermal Resistance	ASTM C518-10	0.437 m²K/W	R value of 2.48
PERFORMANCE PROPERTIES			
Compression Set	ASTM D3575-08-B	8.2%	8.2%
Compressive Strength at 25% Deflection	ASTM D3575-08-D	150 kPa	22 psi
In-Plane Flow Rate (1)	ASTM D4716M-14	8.4 l/min/m	0.68 gal/min/ft
Water Permeability	ASTM D4491-99a (2014) el	794.5 l/min/m²	19.5 gal/min/ft².
Shock Attenuation (2)	ASTM F355-10a	92 - 105 G_{MAX}	260 -330 HIC
GEOTEXTILE (prior to lamination)			
Grab Tensile Strength	ASTM D4632	400 N	90 lb
Grab Tensile Elongation	ASTM D4632	75 %	75 %
Tear Resistance	ASTM D4533	130 N	30 lb
Puncture Resistance	ASTM D6241	1100 N	250 lb
Permittivity	ASTM D4491	2.0 s^{-1}	2.0 s^{-1}
DURABILITY AND ENDURANCE PROPERTIES			
Residual properties after 4000 hours water immersion			
Compression Set	ASTM D5322-98 / D3575-08-B	100% retained	
Compressive Strength at 25% Deflection	ASTM D5322-98 / D3575-08-D	> 75% retained	
Residual properties after 4000 hours aging at 85°C/185°F			
Compressive Strength at 25% Deflection	ASTM D3045-92 / D3575-08-B	100% retained	
Compression Deflection	ASTM D3045-92 / D3575-08-D	> 75% retained	
DIMENSIONS			
Thickness +/- 2 mm (0.08")	ASTM D5199-01	20 mm	3/4 in
Roll Weight	-	228 kg	504 lbs
Roll Width	-	1.22 m	4 ft
Roll Length (custom roll lengths available) +/-1%	-	62.48 m	205 ft
Roll Area	-	76.22 m²	820 ft²

(1) Hydraulic gradient 1% (0.01), compression strength of 10kPa (1.5 psi)

(2) Shock attenuation measured using Triax "A "Missile Tests - Results will vary depending on actual field configuration and final cross-section design

The technical information is provided by ThermaGreen and to the best of our knowledge, is true and accurate; ThermaGreen assumes no legal responsibility for use or reliance of data.

THERMAGREEN.COM

180 Bartor Road, Toronto, ON M9M 2W6
Phone: 416.782.5837 | Toll-Free: 1.877.782.4492
Fax: 416.782.2190

THERMA GREEN ENVIRONMENTAL

FieldTurf USA Inc

POWERBASE YSR
YOUTH SAFETY RESEARCH by BROCK

Typical Properties

Product Number	PBYSR	
Material Type	Expanded Polypropylene	
Part Format	Edge locking panel	
Part Size – net coverage	16.89 sq ft per panel	
Material Density	3.24 lbs / cubic ft (52 grams / litre)	
Part Thickness	0.9 in (23 mm)	
Part Length	61.1 in	
Part Width	42 in	
Part Weight	3.5 lbs per panel	
Tensile Strength	110 psi	ASTM D3757
Tensile Elongation	40%	ASTM D3757
Vertical Permeability	>50"/hr	EN 12616
Hydraulic Transmissivity (ASTM D4716) *		ASTM D4716
Hydraulic Gradient – 0.005 - Flow Rate (GPM/ft width)	0.36 GPM/ft w	
Hydraulic Gradient – 0.005 - Transmissivity (m^2/s)	1.51E-02	
Hydraulic Gradient – 0.0075 - Flow Rate (GPM/ft width)	0.53 GPM/ft w	
Hydraulic Gradient – 0.075 - Transmissivity (m^2/s)	1.45E-02	
Hydraulic Gradient – 0.01 - Flow Rate (GPM/ft width)	0.63 GPM/ft	
Hydraulic Gradient – 0.01 - Transmissivity (m^2/s)	1.28E-02	
Thermal Expansion		ASTM D696
per 1° C change	0.003 in / ft	
Compression Strength		ISO 844
@ 25% strain	30 psi	
@ 50% strain	45 psi	
@ 75% strain	90 psi	
Thermal Conductivity Lambda Value	0.0377 W/mK	EN 12667
Thermal Resistance R Value	3.0	ASTM D3575
Friction Coefficient		ISO 8295
movement of artificial turf over 50mm distance		
maximum force	2.0 lbs	
average force	1.58 lbs	
Environmental Standards Testing		
Cradle to Cradle Silver	Certified	
Germany (DIN)	Pass	DIN V – 18035-7
Switzerland (ESSM)	Pass	ESSM 105-d/1997
Microbiological Analysis		
bacteria resistance	no growth	EN 12225 / ASTM G22-76
fungi resistance	no growth	ASTM G21-96
Resistance to Acid and Alkaline Liquids		EN 14030
% tensile strength loss - 100yr model	0% after 12 days	
Resistance to Oxidation (Accelerated Ageing)		EN ISO 13438:2004
% tensile strength loss - 100yr model	6% after 56 days @ 110°C	
CE Declaration	Product is predicted to be durable for greater than 100 years in pH conditions of 4<pH<9.	EN 14030 EN ISO 13438:2004

**** Note that ASTM D4716 flow rate and hydraulic transmissivity values are not an indication of athletic field drainage performance and cannot be directly used in drainage calculations.***

DATA IS TYPICAL PROPERTIES ONLY. THIS DOCUMENT DOES NOT CREATE
ANY WARRANTY, EXPRESS OR IMPLIED.
September, 2013

SHOCKPAD 14
BY BROCK

Specification & Typical Properties

Product Number	SP14
Material Type	Expanded Polypropylene Composite containing up to 23% by volume pre-consumer and/or reground post-consumer recycled material
Part Format	Interlocking panel
Part Size, nominal net coverage	15.9 sq ft per panel (1.48 sq m)
Material Density, nominal	3.85 lbs / cubic ft (61.7 g per l)
Part Thickness, nominal	0.55 in (14 mm)
Part Length, nominal	57.6 in (1463 mm)
Part Width, nominal	43.8 in (1112 mm)
Part Weight, nominal	2.8 lbs per panel

Property	Typical Value	Specification	
Tensile Strength	52 psi	> 45 psi	ASTM D3575-08
Tensile Elongation	19%	>10%	ASTM D3575-08
Vertical Permeability	1000+ in / hr	> 300 in / hr	ASTM F1551: DIN 18-035, Part 6
Linear Thermal Expansion per 1° C change	0.0833 mm/m	< 0.12 mm/m	ASTM D696-03
Compression Strength @ 25% strain @ 50% strain @ 75% strain	32 psi 54 psi 116 psi	> 25 psi > 40 psi -	ASTM D3575-08
Compression Set – static load (35 psi, 900 sec at 23°C, meas. after 48 hrs)	15% (0.11 in)	< 5%	Brock test protocol
Compression Set – repeated impacts (95 psi, repeated load, 10,000 cycles, after 24 hrs)	6.0% (0.031 in)	< 15%	Brock test protocol
Friction Coefficient movement of artificial turf over 50mm maximum force average force	2.44 lbs max force 1.35 lbs avg force	> 1.80 lbs max force > 1.00 lbs avg force	Brock test protocol
Microbiological Analysis bacteria resistance fungi resistance	No growth No growth	No growth No growth	ASTM G22-76 ASTM G21-96

BEYNON
A Tarkett Sports Company
THE ULTIMATE SURFACE EXPERIENCE

SHOCKBASE – 26mm
(Elastic Layer Shock Pad)

1.0 MATERIALS

A. SHOCKBASE – Elastic Layer Shock Pad

1. The SHOCKBASE elastic layer shock pad shall be 26mm in nominal thickness and provide an energy absorbing elastic layer for use with athletic field surfaces. Composition to be comprised of SBR rubber granules (XL) and moisture cured polyurethane binder. The elastic layer system shall demonstrate resistance to rot, mildew, water, freeze-thaw and compression set properties associated with normal athletic field use.

MATERIAL	LBS/YD²
SBR (XL) Rubber	23.70
Beypur 300 (PU Binder)	2.85
TOTAL	**26.55**

2. Elastic layer shock pad shall conform to the following physical properties:

A.	Thickness:	26mm nominal
B.	Density:	~ 26 lbs/yd²
C.	Shock Absorbency (ASTM F355):	~ 150 GMax
D.	Water Permeability:	> 1000 mm/hour

2.0 EXECUTION

A. The installation shall be performed in compliance with approved shop drawings.

B. The existing permeable substrate layer being pavement or compacted stone shall serve as the base of the elastic layer shock pad.

C. The finished elastic layer surface to receive the synthetic turf system shall be inspected and certified by the manufacturer as acceptable prior to installation of the synthetic turf system. The elastic layer surface must be perfectly clean during throughout the installation process of the synthetic turf system.

D. Prior to the installation of the elastic layer the installer shall confirm the planarity of the existing substrate system as it relates to uniformity and slope. The surface shall be checked with a 10-foot straight edge over the entire surface and/or string-lined at each inlay location. Deviations of the existing base that exceed ¼" over the ten foot straight edge shall be remedied prior to the installation of the elastic layer shock pad.

These deviations shall be marked in the field as to the height or depth of the imperfection and reviewed the engineer. Low spots shall be filled with approved material, high spots may be either ground down to acceptable tolerance or regarded depending on the substrate.

E. Material shall not be installed when ambient temperature is below 50° F or above 100°F, or if the material is wet, or if rain is falling or pending.

F. Elastic layer shock pad shall be installed in one lift at approximately uniform thickness. Joints shall be troweled with compaction by a paving machine operator as the material is paved. Seams shall be hand rolled. Cold pad joints shall be primed with a polyurethane primer supplied by the elastic layer shock pad manufacturer.

G. Surface irregularities which exceed ¼ in. measured by means of 10 ft. long straightedge shall be corrected prior to placement of synthetic surface.

H. Installing contractor shall use SMG Planomatic model 928-D or approved equal paving machine with fully electronic leveling and steering controls and SMG Mixmatic M6004 continuous mixer.

I. Only factory approved technicians skilled in the installation of paved in place elastic layer systems shall undertake the placement of the system.

End of Section

BEYNON
A Tarkett Sports Company
THE ULTIMATE SURFACE EXPERIENCE

SHOCKBASE – 19mm
(Elastic Layer Shock Pad)

1.0 MATERIALS

A. SHOCKBASE – Elastic Layer Shock Pad

1. The SHOCKBASE elastic layer shock pad shall be 19mm in nominal thickness and provide an energy absorbing elastic layer for use with athletic field surfaces. Composition to be comprised of SBR rubber granules (XL) and moisture cured polyurethane binder. The elastic layer system shall demonstrate resistance to rot, mildew, water, freeze-thaw and compression set properties associated with normal athletic field use.

MATERIAL	LBS/YD²
SBR (XL) Rubber	18.00
Beypur 300 (PU Binder)	2.16
TOTAL	**20.16**

2. Elastic layer shock pad shall conform to the following physical properties:

A.	Thickness:	19mm nominal
B.	Density:	~ 20 lbs/yd²
C.	Shock Absorbency (ASTM F355):	~ 185 GMax
D.	Water Permeability:	> 1000 mm/hour

2.0 EXECUTION

A. The installation shall be performed in compliance with approved shop drawings.

B. The existing permeable substrate layer being pavement or compacted stone shall serve as the base of the elastic layer shock pad.

C. The finished elastic layer surface to receive the synthetic turf system shall be inspected and certified by the manufacturer as acceptable prior to installation of the synthetic turf system. The elastic layer surface must be perfectly clean during throughout the installation process of the synthetic turf system.

D. Prior to the installation of the elastic layer the installer shall confirm the planarity of the existing substrate system as it relates to uniformity and slope. The surface shall be checked with a 10-foot straight edge over the entire surface and/or string-lined at each inlay location. Deviations of the existing base that exceed ¼" over the ten foot straight edge shall be remedied prior to the installation of the elastic layer shock pad.

These deviations shall be marked in the field as to the height or depth of the imperfection and reviewed the engineer. Low spots shall be filled with approved material, high spots may be either ground down to acceptable tolerance or regarded depending on the substrate.

E. Material shall not be installed when ambient temperature is below 50° F or above 100°F, or if the material is wet, or if rain is falling or pending.

F. Elastic layer shock pad shall be installed in one lift at approximately uniform thickness. Joints shall be troweled with compaction by a paving machine operator as the material is paved. Seams shall be hand rolled. Cold pad joints shall be primed with a polyurethane primer supplied by the elastic layer shock pad manufacturer.

G. Surface irregularities which exceed ¼ in. measured by means of 10 ft. long straightedge shall be corrected prior to placement of synthetic surface.

H. Installing contractor shall use SMG Planomatic model 928-D or approved equal paving machine with fully electronic leveling and steering controls and SMG Mixmatic M6004 continuous mixer.

I. Only factory approved technicians skilled in the installation of paved in place elastic layer systems shall undertake the placement of the system.

End of Section

FieldTurf® A Tarkett Sports Company | FieldCLEANSE

SAFETY FOR ATHLETES HAS ALWAYS BEEN A TOP PRIORITY FOR FIELDTURF AND TODAY THAT DISCUSSION IS EVEN MORE RELEVANT. WE WANT OUR CUSTOMERS AND THEIR ATHLETES TO KNOW THAT WE CAN ASSIST THEM IN ENSURING THAT THEIR FACILITIES ARE AS SAFE AS POSSIBLE.

The FieldCleanse Program, part of FieldTurf's multi-pronged service platform, is designed to increase safety measures for our clients and their athletes. FieldTurf, which for over 25 years has been recognized as the leader in artificial turf and player safety is proud to introduce the FieldCleanse program designed to elevate the cleanliness standards of our fields and to meet the new health and safety challenges presented by the current pandemic environment. This multi-faceted approach includes our standard guidance for Brushing, Aerating, Raking and Sweeping along with new options for those who want to sanitize their turf fields.

THE FIELDCLEANSE SERVICE OFFERING

BRUSHING

Agitate & loosen inill

AERATING

Prevent infill compaction & build up

RAKING

Prevent infill compaction & build up

SWEEPING

Remove debris & contaminants

SANITIZING

The ultimate in bacteria control

SANITIZATION PROGRAM PACKAGES

1 COMPLETE

DON'T HAVE THE NECESSARY EQUIPMENT OR LABOR?

Our FieldTurf Service Experts will provide a full service cleanse with sanitization utilizing EPA Approved mPerial sanitizer.

2 BASIC

INTERESTED IN DOING IT YOURSELF?

mPerial is available in 5 gallon, 55 gallon or 275 gallon containers. 5 gallons of mPerial is enough to treat 80,000 sq.ft. of synthetic turf

(see application instructions for more details)

Our Customer Service Coordinators can provide a detailed quote for the Complete or Basic Sanitization along with our full suite of FieldCleanse options including Brushing, Aerating, Raking and Sweeping.

WE CAN HELP WITH TRACKS, COURTS, GYMS AND MORE!

Have additional facilities that need to be sanitized? Our certified teams can help. As a part of Tarkett Sports, the worldwide leader in sports surfacing, we can help with a variety of surfacing applications. Our experienced R&D and service teams have identified the right products and application rates to ensure that your facility is properly cleaned and that we are keeping your athletes safe. Our Customer Service Coordinators can provide you with a complete cleaning solution, offering you peace of mind from the experts.

Book your session: 800-724-2969 | service@fieldturf.com | fieldturf.com

FieldTurf®
A Tarkett Sports Company

FieldCLEANSE

EPA APPROVED CORONAVIRUS (COVID-19) SANITIZER

FieldTurf's NEW FieldCleanse program will help deep clean your surface to combat COVID-19. Utilizing an EPA approved coronavirus sanitizer: mPerial ™, by MPact™ Environmental Solutions, LLC, which confirms results that demonstrates the ability of the mPact™ technology to prevent and protect against the spread of the COVID-19 Virus. mPerial ™ is EPA registered with multiple studies across many industries proving its safety and efficacy. Both products in the mPact antimicrobial cleaning system are EPA Registered, non-toxic, biodegradable and non leaching: therefore it does not absorb in the body. The active formula in our products have been used safely for many solutions since 1976.

MPERIAL PRODUCT DETAILS

- EPA registered, FDA compliant
- EPA Registration #: 10324-59-83129

DILUTION RATIOS

- Standard Use: 2 oz. per gal. (approx. 4 gal. per 250 gal. water tank)

APPLICATION

- Can be applied with a low pressure sprayer using "wet" nozzles - not atomized
- Approximately 1 gallon (diluted) per 250 sq. ft.
- Entire surface area must remain wet for 10 minutes
- Do not apply when temperatures are high
- Be sure all surfaces are dry before application
- Once applied, the product should be flushed through the system with water

Note – This product is safe to use once or twice a year on FieldTurf systems. Further usage could damage the field fibers.

FIELDCLEANSE CUSTOMER COMMITMENT

FIELDTURF, THE WORLD LEADER IN ARTIFICIAL TURF, IS COMMITTED TO KEEPING ATHLETES SAFE – A PROMISE MADE VIA OUR INNOVATION PROGRAM STRAIGHT THROUGH TO HOW WE MAINTAIN OUR FIELDS. IT'S WHY OVER 20,000 CUSTOMERS WORLDWIDE PUT THEIR TRUST IN FIELDTURF.

Book your session: 800-724-2969 | service@fieldturf.com | fieldturf.com

Tarkett SPORTS

FACILITY SHIELD

THE ULTIMATE ATHLETIC FACILITY SANITIZATION PROGRAM

Tarkett SPORTS | FACILITY SHIELD

SOLUTIONS FOR YOUR ATHLETES

EQUIPMENT SANITIZATION: SANI SPORT

Want the same protection for your equipment & facilities as NFL, NHL & MLB teams? The Sani Sport technology significantly reduces harmful bacteria and viruses on personal protective gear (PPE), sports equipment and enclosed spaces. 3200 times more powerful than bleach, the Sani Sport sanitizing equipment can be used for helmets; cleats; skates; protective padding of all sorts including shin guards, shoulder pad, jock straps, gloves; and even exercise mats.

PROVEN 98% KILL RATE OF COVID-19
IN A 30 MINUTE TIME FRAME
Testing performed by Cornell University

Sani Sport

REMOVES HARMFUL PATHOGENS:

-Staphylococous aureus (S. aureus)
-Staphylococous aureus MRSA
-Streptococous viridans (S. viridans)
-Escherichia Coli (E. coli)
-Influenza
-Clostridium difficil (C. diff)
-Acinetobacter baumannii
-Klebsiella Pneumoniae ESBL
-MERS
-Mumps
-H1N1
-COVID-19

EQUIPEMENT

DISINFECTS AND DRIES EQUIPMENT IN 12 MINUTES

FROM: **$15,995**

FROM: **$22,295**

ENCLOSED SPACES

SANITIZES ROOMS 600–4,000 SQ.FT. IN 30 TO 240 MINUTES

FROM: **$12,995**

Sani Sport

SPORTSFIELD SPECIALTIES
WWW.SPORTSFIELDSPECIALTIES.COM

Excellence from Design to Installation
41155 State Highway 10, PO Box 231, Delhi, NY 13753 CALL: 888-975-3343 FAX: 607-746-8481

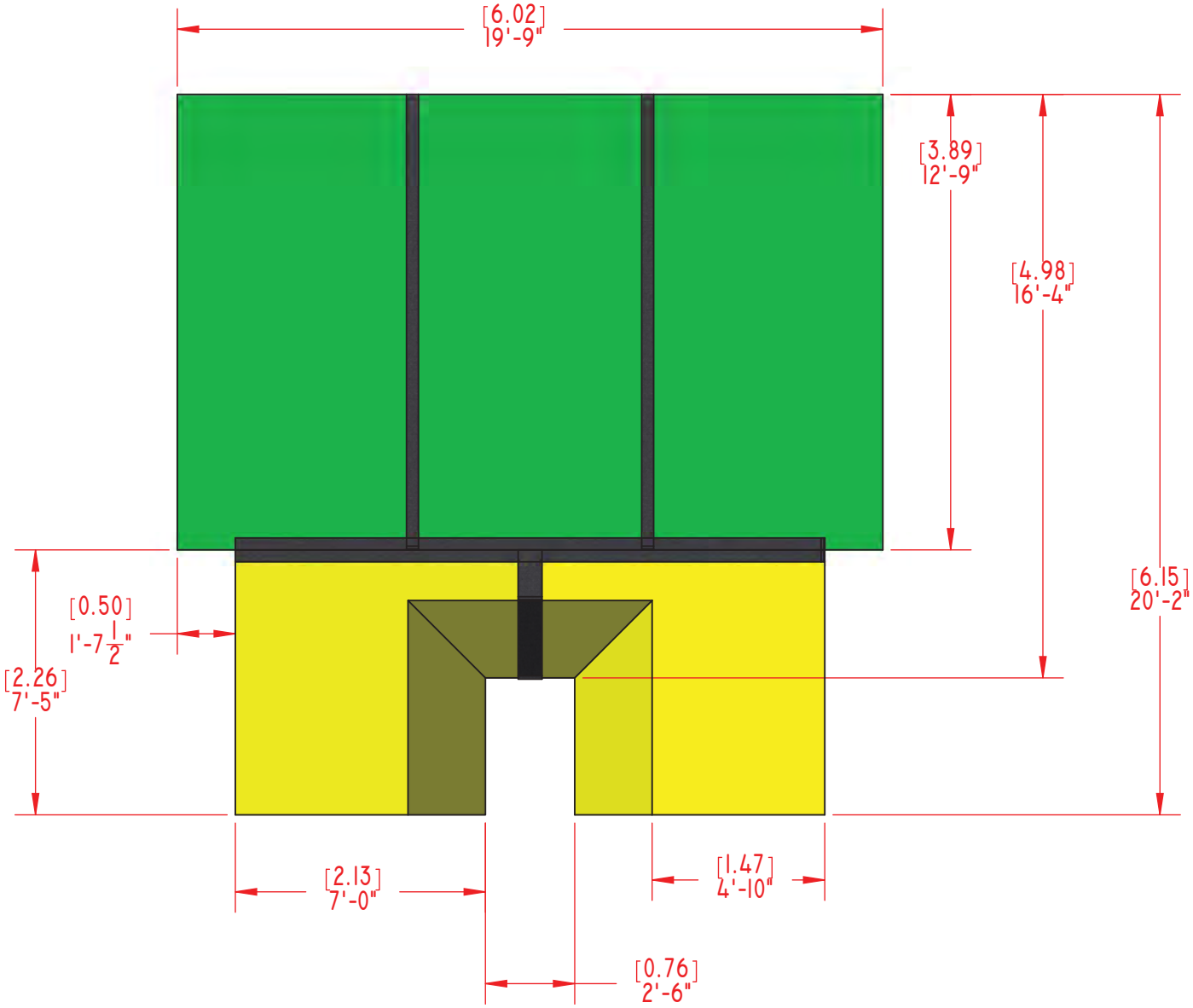

MEETS AND/OR EXCEEDS ALL NFHS SPECIFICATIONS

OVERALL SIZE: 19'-9" X 20'-2" X 26"
METRIC: 6.02M X 6.15M X .66M
THREE (3) BASE UNITS: 6'-7" X 12'-9" X 26" (GREEN)
TWO (2) FRONT SLANT UNITS: 8'-3" X 7'-5" X 26" (YELLOW)
ONE (1) SKIRTED MESH TOP COVER: (NOT SHOWN)
ONE (1) TFPVPBSC - PLANTING BOX SAFETY COLLAR (NOT SHOWN)

PROPRIETARY AND CONFIDENTIAL
THE INFORMATION CONTAINED IN THIS DRAWING IS THE SOLE PROPERTY OF SPORTSFIELD SPECIALTIES INC. ANY REPRODUCTION IN PART OR AS A WHOLE WITHOUT THE WRITTEN PERMISSION OF SPORTSFIELD SPECIALTIES INC. IS PROHIBITED.

JumpZone® Champion Bronze Pole Vault Landing System Overview
TFPV202IL

Not To Scale

Sportsfield Specialties Inc 08172012

SPORTSFIELD SPECIALTIES
WWW.SPORTSFIELDSPECIALTIES.COM
Excellence from Design to Installation
41155 State Highway 10, PO Box 231, Delhi, NY 13753 CALL: 888-975-3343 FAX: 607-746-8481

GPAFIT Access Frame Kit + for use with Ground Sleeve and Base Plate Mount AdjustRight® Football Goal Posts Installed in Synthetic Turf Applications

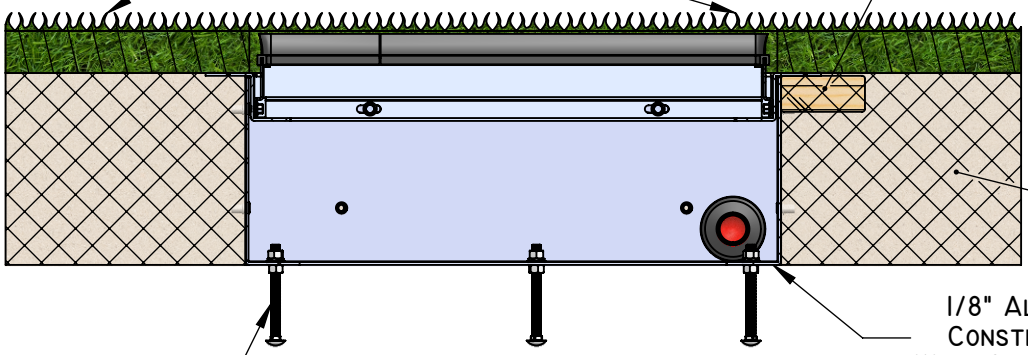

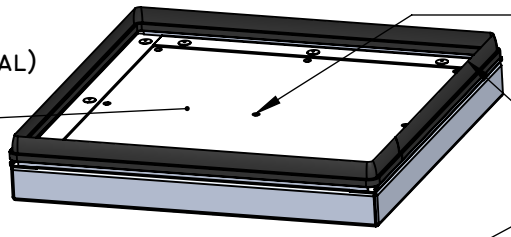

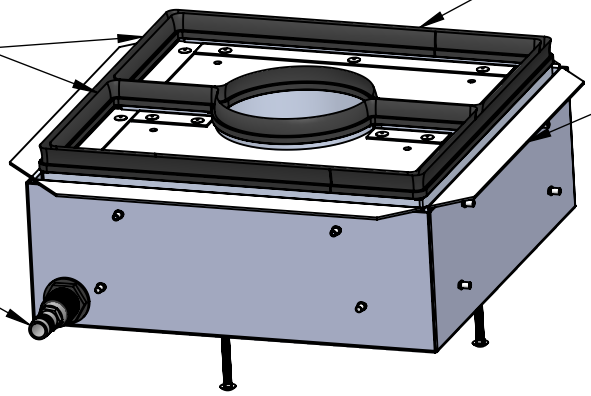

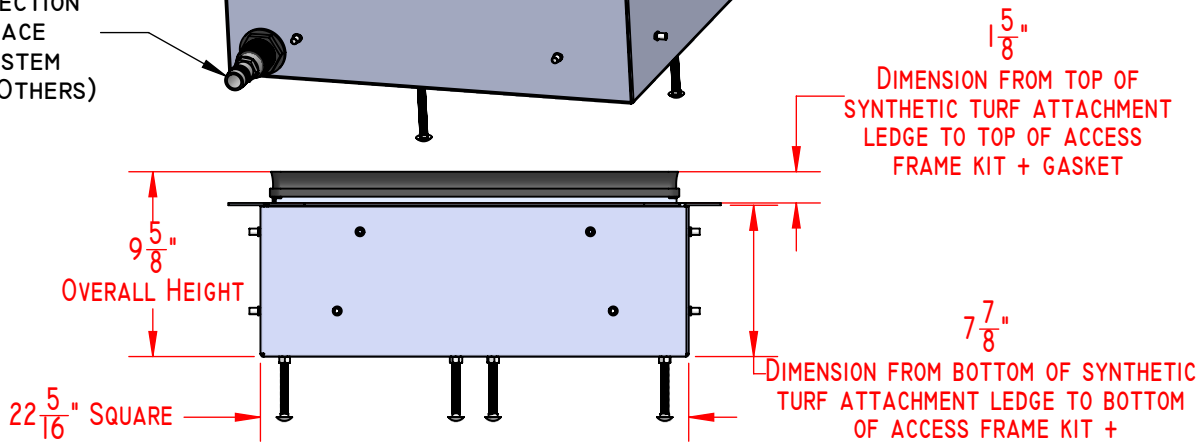

PROPRIETARY AND CONFIDENTIAL
THE INFORMATION CONTAINED IN THIS DRAWING IS THE SOLE PROPERTY OF SPORTSFIELD SPECIALTIES INC. ANY REPRODUCTION IN PART OR AS A WHOLE WITHOUT THE WRITTEN PERMISSION OF SPORTSFIELD SPECIALTIES INC. IS PROHIBITED.

GPAFIT (GP4570) Access Frame Kit + with Infill Retainer System for Synthetic Turf Applications

Not To Scale

Sportsfield Specialties Inc 08222017

SPORTSFIELD SPECIALTIES
WWW.SPORTSFIELDSPECIALTIES.COM
Excellence from Design to Installation

1-888-975-3343

Installation Guide

Product No.	Product Description
DHCCOL	College Discus/Hammer Cage System, Single Pad (6.15 Meters)
DDHCCOL	College Discus/Hammer Cage System, Dual Pad (6.15 Meters)

Based on the cage configuration desired, refer to one of the following documents for the placement of the ground sleeves.

- College Discus Hammer Cage Single Pad Ground Sleeve Layout (6 Poles)
- College Discus Hammer Cage Dual Pad Ground Sleeve Layout (8 Poles)

SPORTSFIELD SPECIALTIES
WWW.SPORTSFIELDSPECIALTIES.COM
Excellence from Design to Installation
41155 State Highway 10, PO Box 231, Delhi, NY 13753 CALL: 888-975-3343 FAX: 607-746-8481

STOP BOLT/ALIGNMENT NOTCHES MUST BE INSTALLED IN CORRECT POSITION TO ALLOW FOR PROPER ORIENTATION OF UPRIGHT POLE

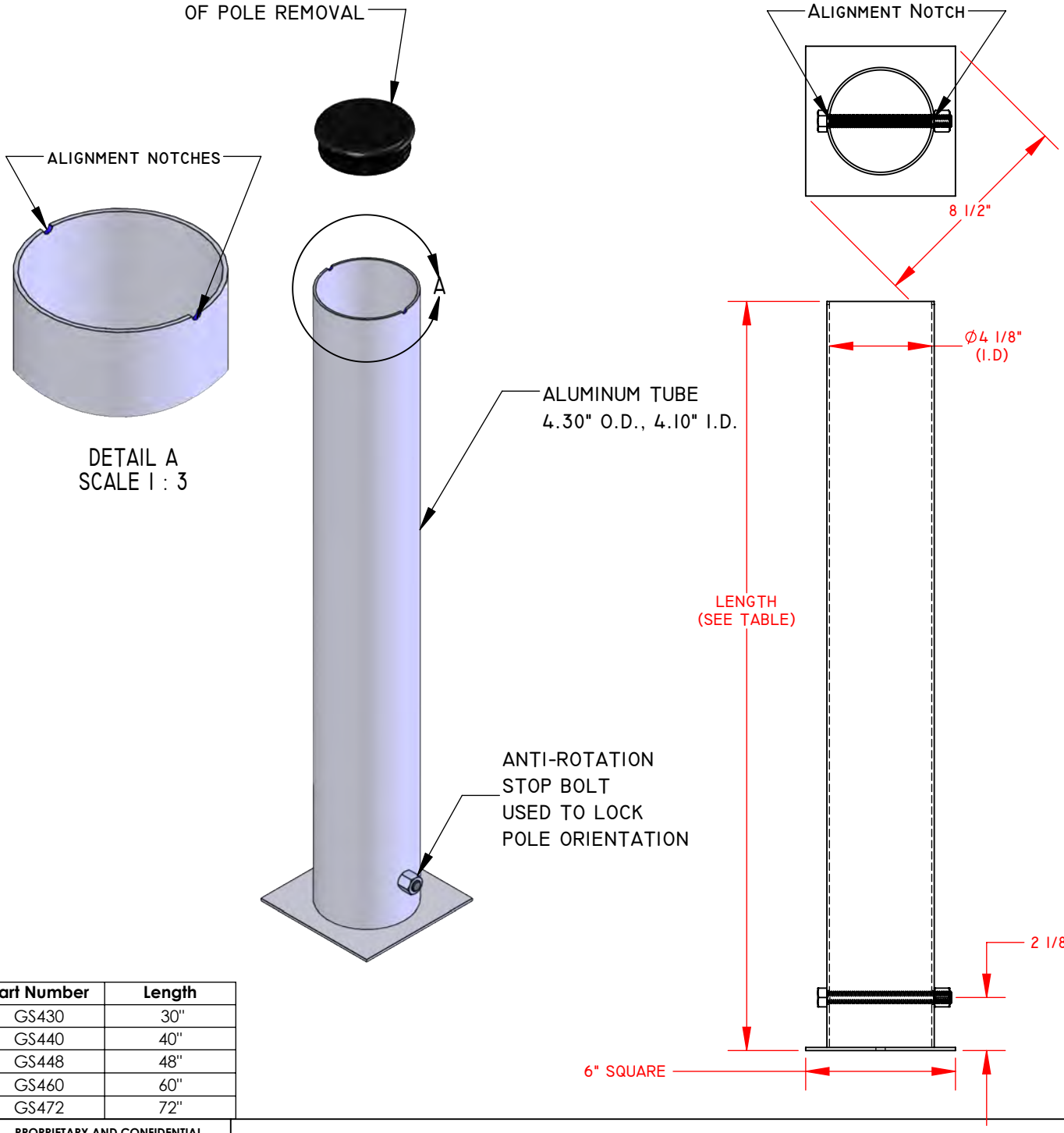

Part Number	Length
GS430	30"
GS440	40"
GS448	48"
GS460	60"
GS472	72"

PROPRIETARY AND CONFIDENTIAL
THE INFORMATION CONTAINED IN THIS DRAWING IS THE SOLE PROPERTY OF SPORTSFIELD SPECIALTIES INC. ANY REPRODUCTION IN PART OR AS A WHOLE WITHOUT THE WRITTEN PERMISSION OF SPORTSFIELD SPECIALTIES INC. IS PROHIBITED.

GS4XX
GROUND SLEEVE WITH STOP BOLT FOR 4" O.D. POST

NOT TO SCALE

SPORTSFIELD SPECIALTIES INC 03222019

Bill of Material (BOM) Reference

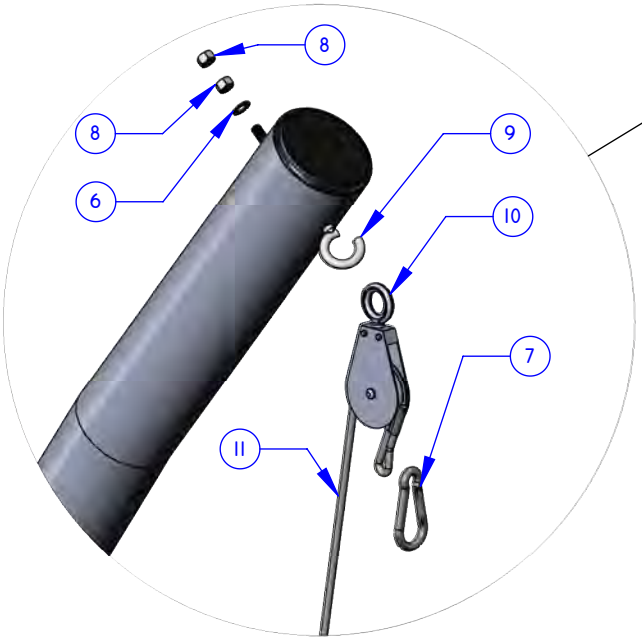

PULLEY AND TETHER DETAIL

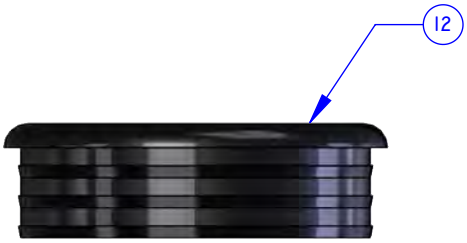

GROUND SLEEVE CAP

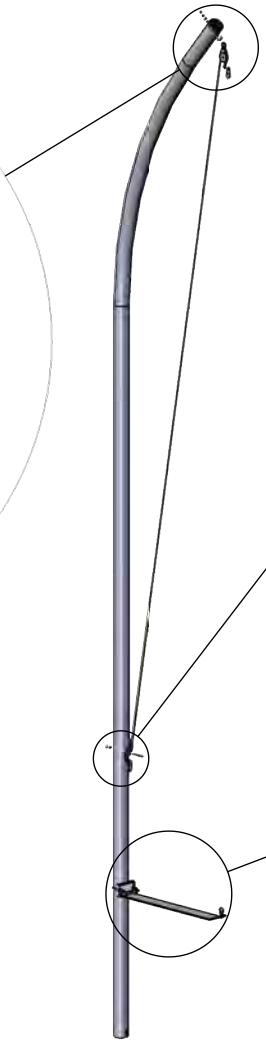

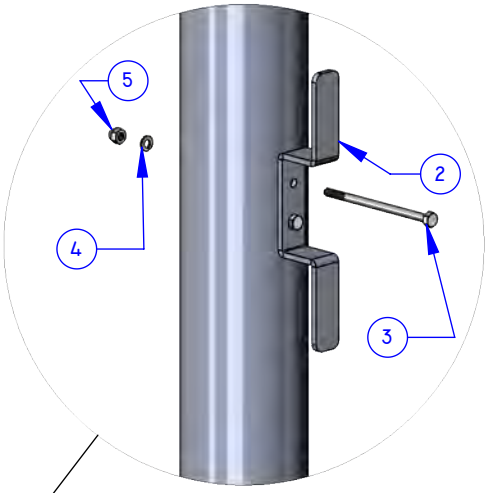

ROPE CLEAT DETAIL

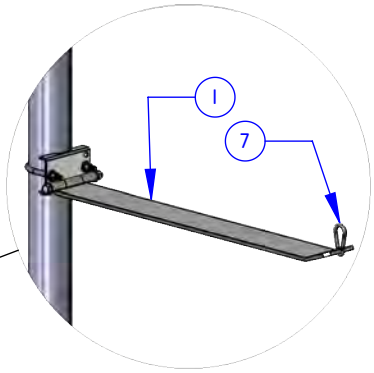

EXTENSION ARM DETAIL

6 POLES PER DHCCOL
8 POLES PER DDHCCOL

INSTALL NOTES:

1. INSTALL TETHER AND ROPE CLEAT HARDWARE PRIOR TO INSERTING POLE INTO GROUND SLEEVE
2. GROUND SLEEVE CAPS PROVIDED FOR USE WHEN POLES ARE REMOVED FOR STORAGE
3. EXTENSION ARMS ARE INSTALLED AT FINISH GRADE. USE SPRING HOOK FOR BOTTOM NET ATTACHMENT

ITEM NO.	QTY.	DRAWING NUMBER	SAP PART NUMBER	DESCRIPTION
1	1	HINGE-STAB-EXT	E-1000-S004	STANDARD 36'' HINGED STABILIZER EXTENSION ARM
2	1	ROPE CLEAT	E-1000-0013	STEEL ROPE CLEAT
3	2	101-HHCI_4-20X4.50-SS	101-HHC-0025	1/4-20 X 4.5'' HEX HEAD BOLT, 304 SS
4	2	110-SLWI_4-SS	110-SLW-0002	1/4 SS LOCK WASHER
5	2	107-HXNI_4-20ACORN-SS	107-HXN-0006	1/4-20 S.S. LOW CROWN ACORN NUT
6	1	110-FLW3_8-SS	110-FLW-0005	3/8 S.S. FLAT WASHER
7	2	113-209860	PURCHP-0009	5/16" SPRING HOOK
8	2	107-HXN3_8-16-SS	107-HXN-0020	3/8-16 STAINLESS STEEL HEX NUT
9	1	100-EYE3_8-16x5.125-STL-OPEN	100-EYE-0005	3/8-16 x 5.125" LONG OPEN EYE BOLT
10	1	113-BLOCKWR300-02548	PURCHP-0026	1/4" SWIVEL BLOCK PULLEY
11	1	TETHER-45	TETHER-45	45' LONG TETHER
12	1	114-GS-04-CAP	PURCHP-0318	PLASTIC END CAP (FITS 4" O.D. X 1/8" WALL)

ERP Part No.	TITLE:	DWG. NO.	REV
Undefined	Hardware Kit, Single Cage Pole, Hammer/Discus, Standard	TFDHC-POLE-HD	A
		DRAWN BY B. DREHER / Revision Date 08/03/2018	SHEET 1 OF 1

Bill of Material (BOM) Reference

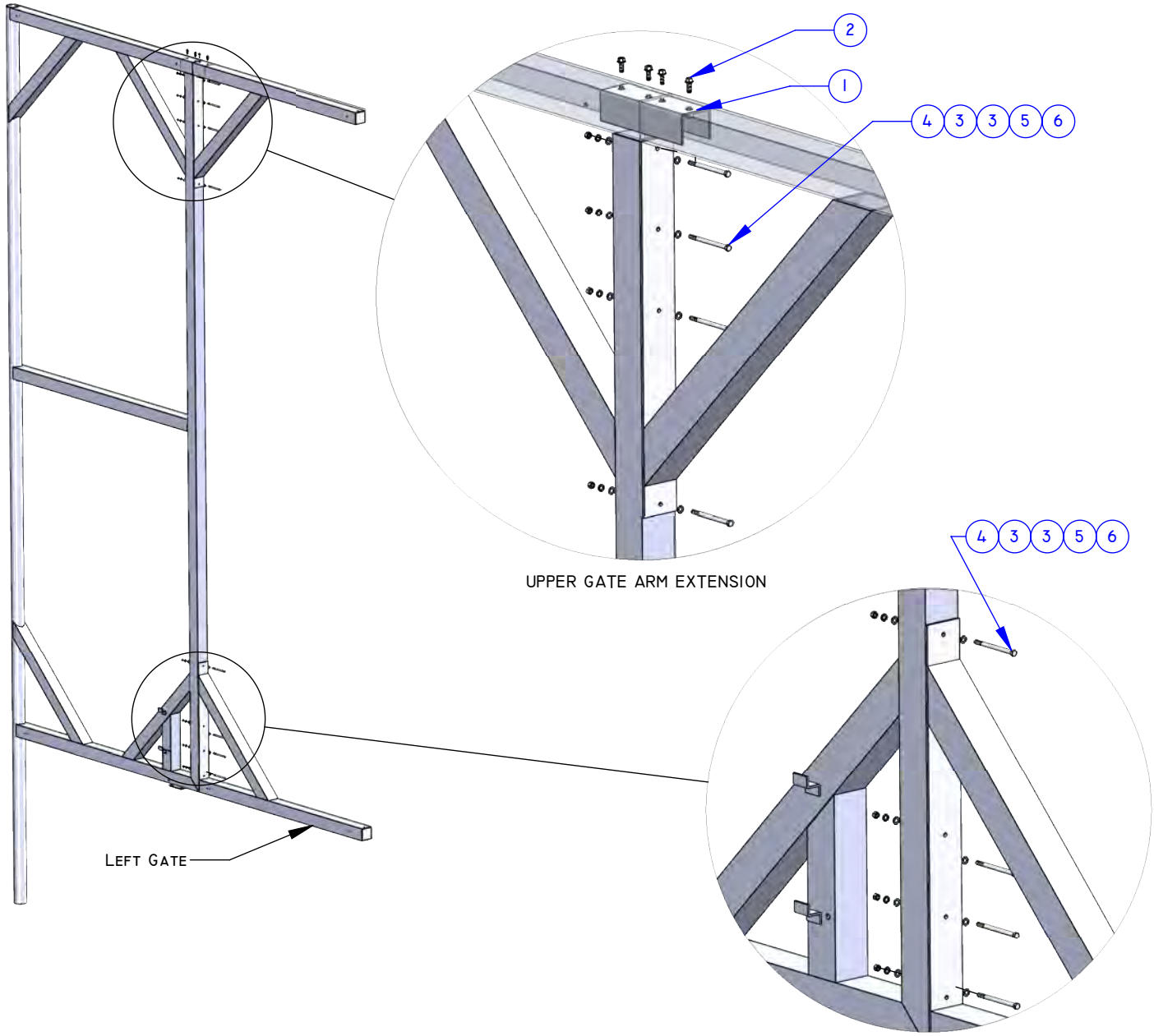

INSTALL NOTES:

1. ATTACH THE GATE ARM EXTENSIONS TO THE MAIN GATE BEFORE INSERTING GATE INTO THE GROUND SLEEVE

2 GATES PER DHCCOL AND DDHCCOL

ITEM NO.	QTY.	DRAWING NUMBER	SAP PART NUMBER	DESCRIPTION
1	1	SG4910-CHANNEL	E-1004-S008	4 HOLE CONNECTING CHANNEL, 3.600" WIDE X 3.0" HIGH X 12.0" LONG
2	4	100_HWH3_8_16X1_SER_CS_BP	100-HWH-0002	3/8-16 X 1'' HEX WASHER HEAD WITH SERRATED FLANGE, GRADE 5, FULLY THREADED
3	16	110-FLW3_8-SS	110-FLW-0005	3/8 S.S. FLAT WASHER
4	8	101-HHC3_8-16X5.5-SS	101-HHC-0039	3/8-16 X 5.5'' HEX HEAD BOLT, 304 SS
5	8	110-SLW3_8-SS	110-SLW-0006	3/8-16 S. S. LOCK WASHER
6	8	107-HXN3_8-16-SS	107-HXN-0020	3/8-16 STAINLESS STEEL HEX NUT

ERP Part No.	TITLE:	DWG. NO.	REV
Undefined	Hardware Kit, College Discus/Hammer, Standard Rotating Gate	TFDHC-GATE-HD	B
		DRAWN BY LRM / Revision Date 11/12/2018	SHEET 1 OF 7

Bill of Material (BOM) Reference

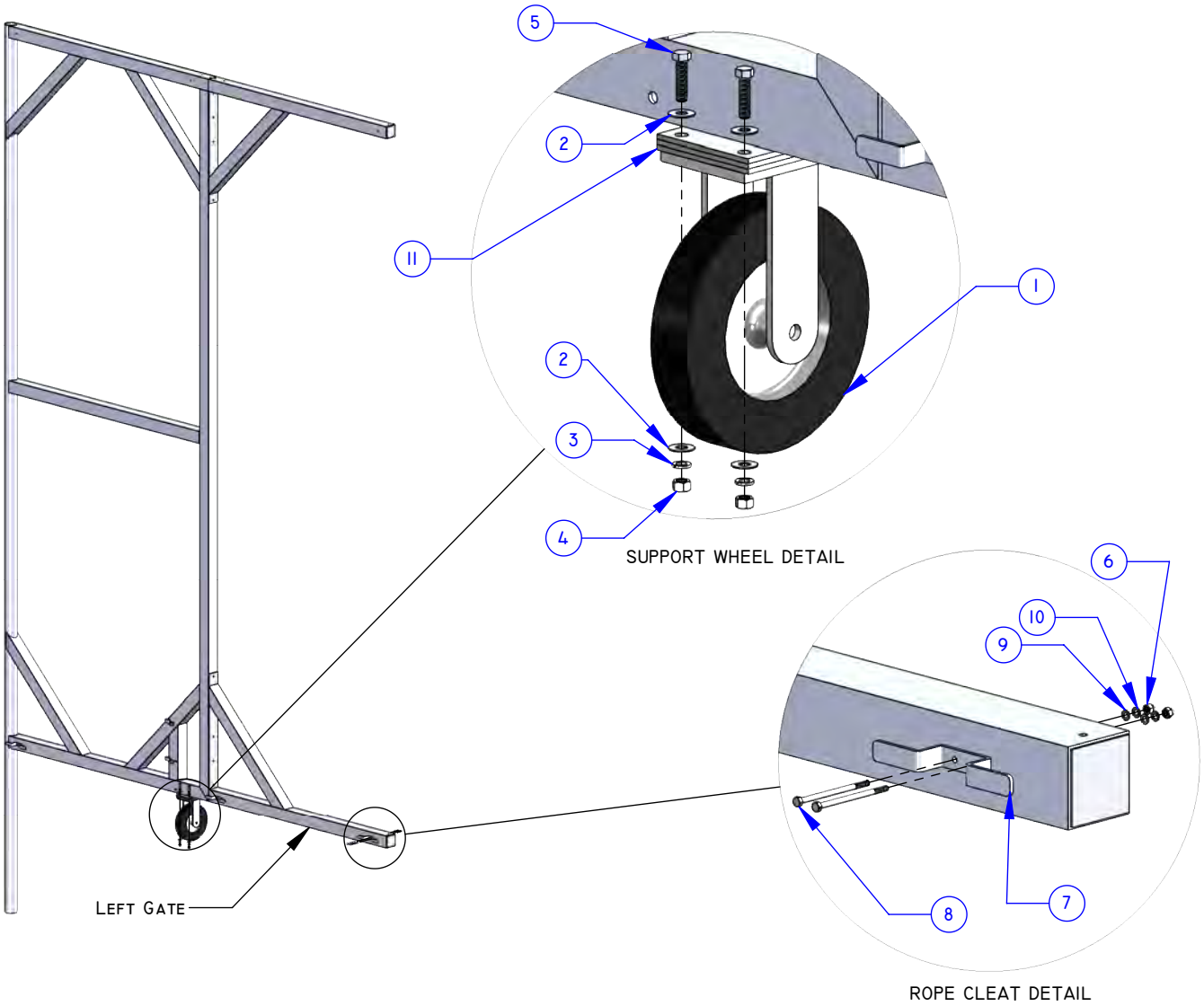

INSTALL NOTES:

1. WHEEL SHIMS ARE INCLUDED TO HELP SET THE WHEEL ON THE CONCRETE PATH ONCE THE GATE IS INSERTED INTO THE GROUND SLEEVE
2. MAKE SURE THE ROPE CLEATS ARE ON THE OUTSIDE OF THE CAGE FOR BOTH THE LEFT AND RIGHT GATES

ITEM NO.	QTY.	DRAWING NUMBER	SAP PART NUMBER	DESCRIPTION
1	1	114-R-8012-SU	PURCHP-0344	RIGD, HARD RUBBER CASTER W/SIDE BRAKE, 12" X 2.75"
2	8	110-FLWI_2-SS	110-FLW-0001	1/2 S.S. FLAT WASHER
3	4	110-SLWI_2-SS	110-SLW-0001	1/2 S.S. LOCK WASHER
4	4	107-HXNI_2-13-SS	107-HXN-0003	1/2-13 STAINLESS STEEL HEX NUT
5	4	101-HHCI_2-13X2-SS	101-HHC-0005	1/2-13 X 2'' HEX HEAD BOLT, 304 SS
6	6	107-HXNI_4-20ACORN-SS	107-HXN-0006	1/4-20 S.S. LOW CROWN ACORN NUT
7	3	ROPE CLEAT	E-1000-0013	STEEL ROPE CLEAT
8	6	101-HHCI_4-20X4.50-SS	101-HHC-0025	1/4-20 X 4.5'' HEX HEAD BOLT, 304 SS
9	6	110-FLWI_4-SS	110-FLW-0002	1/4" S.S. FLAT WASHER
10	6	110-SLWI_4-SS	110-SLW-0002	1/4 SS LOCK WASHER
11	2	DHC-WHEEL SHIM	E-0018-S041	HAMMER/DISCUS CAGE WHEEL SHIM, PAINTED BLACK

ERP Part No.	TITLE:	DWG. NO.	REV
Undefined	Hardware Kit, College Discus/Hammer, Standard Rotating Gate	TFDHC-GATE-HD	B
		DRAWN BY LRM / Revision Date 11/12/2018	SHEET 2 OF 7

Bill of Material (BOM) Reference

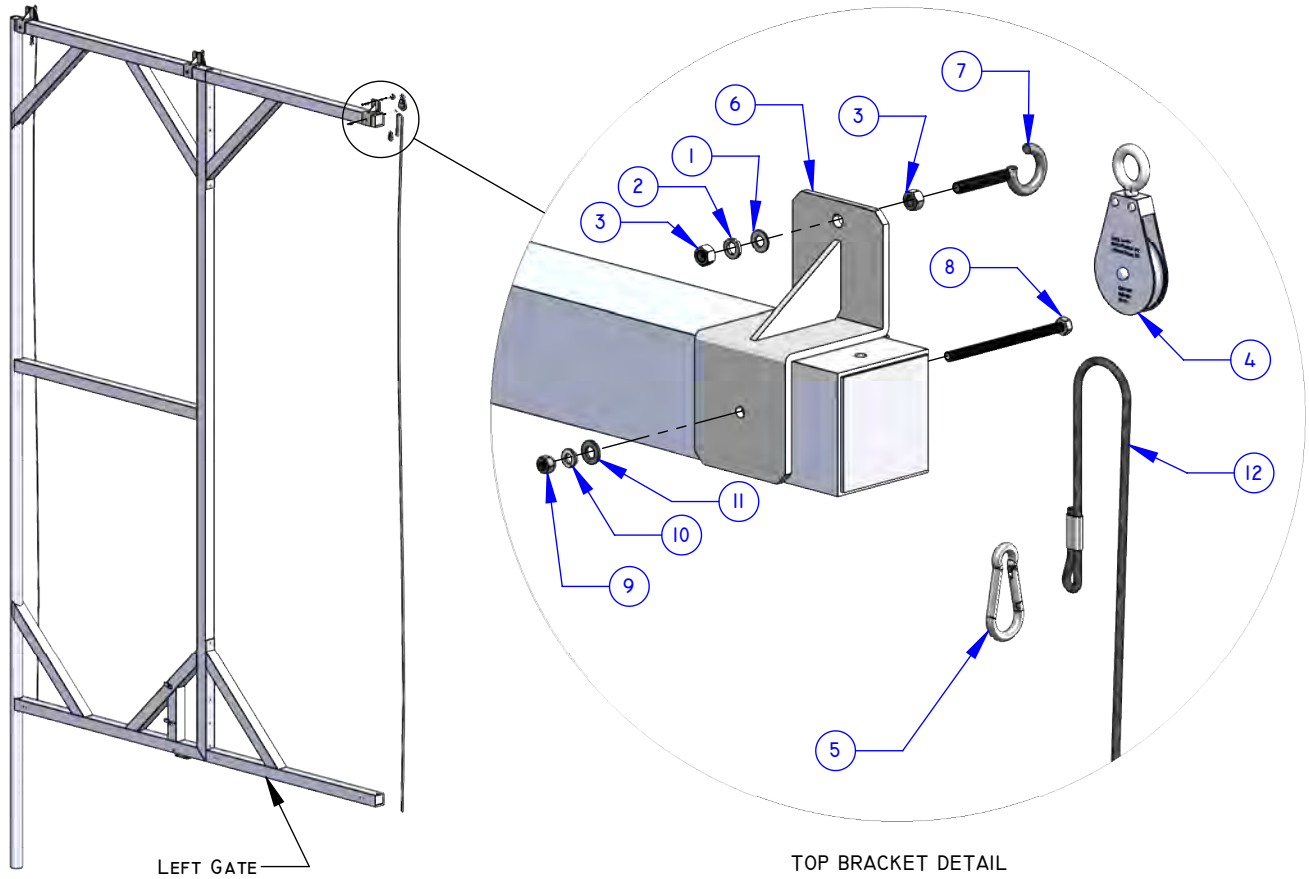

INSTALL NOTES:

1. MOUNT THE TOP BRACKETS AND HARDWARE SUCH THAT THE EYE BOLT FOR THE PULLEY AND TETHER IS FACING THE INSIDE OF THE CAGE

ITEM NO.	QTY.	DRAWING NUMBER	SAP PART NUMBER	DESCRIPTION
1	3	110-FLW3_8-SS	110-FLW-0005	3/8 S.S. FLAT WASHER
2	3	110-SLW3_8-SS	110-SLW-0006	3/8-16 S. S. LOCK WASHER
3	6	107-HXN3_8-16-SS	107-HXN-0020	3/8-16 STAINLESS STEEL HEX NUT
4	3	113-BLOCKWR300-02548	PURCHP-0026	1/4" SWIVEL BLOCK PULLEY
5	3	113-209860	PURCHP-0009	5/16" SPRING HOOK
6	3	TFDHC-GATE-BRACKET	E-0018-S008	GATE PULLEY BRACKET, HAMMER/DISCUS CAGE
7	3	100-EYE3_8-16X2.5-OPEN-STL	E-1000-0024	3/8-16 X 2.5" LONG OPEN EYE BOLT
8	3	101-HHC5_16-18X5-SS	101-HHC-0051	5/16-18 X 5.00'' HEX HEAD BOLT, 304 SS
9	3	107-HXN5_16-18-SS	107-HXN-0023	5/16-18 S.S. HEX NUT
10	3	110-SLW5_16-SS	110-SLW-0007	5/16 S.S. LOCK WASHER
11	3	110-FLW5_16-SS	110-FLW-0007	5/16 S.S. FLAT WASHER
12	3	DHC-GATE PULLEY TETHER	TETHER-45	TETHER FOR DHC GATE

ERP Part No.	TITLE:	DWG. NO.	REV
Undefined	Hardware Kit, College Discus/Hammer, Standard Rotating Gate	TFDHC-GATE-HD	B
		DRAWN BY LRM / Revision Date 11/12/2018	SHEET 3 OF 7

Bill of Material (BOM) Reference

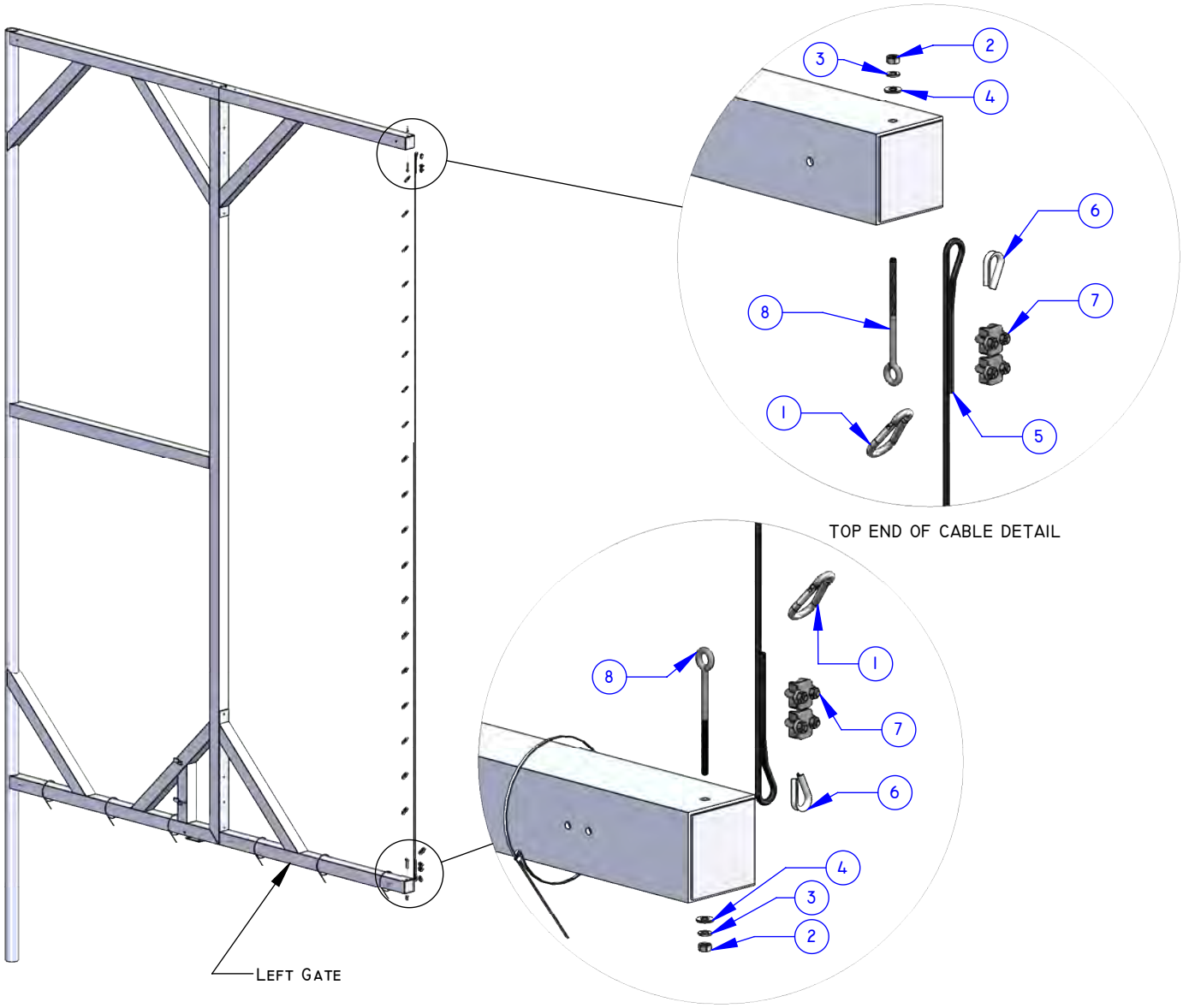

INSTALL NOTES:

1. INSTALL EYE BOLTS AT THE TOP AND BOTTOM AND THEN ATTACH VERTICAL CABLE USING THIMBLE AND ROPE CLIPS
2. PULL CABLE AS TIGHT AS POSSIBLE SO THAT IT IS TAUT AND USE THE SPRING HOOKS TO CLIP THE SIDES OF THE NET TO THE CABLE
3. USE THE CABLE TIES TO SECURE THE NET AT THE BOTTOM OF THE GATE

ITEM NO.	QTY.	DRAWING NUMBER	SAP PART NUMBER	DESCRIPTION
1	20	113-209860	PURCHP-0009	5/16" SPRING HOOK
2	2	107-HXN5_16-18-SS	107-HXN-0023	5/16-18 S.S. HEX NUT
3	2	110-SLW5_16-SS	110-SLW-0007	5/16 S.S. LOCK WASHER
4	2	110-FLW5_16-SS	110-FLW-0007	5/16 S.S. FLAT WASHER
5	1	113-VGACB187	PURCHP-0048	1/4" BLACK VINYL COATED WIRE ROPE
6	2	113-211160	PURCHP-0010	1/4" THIMBLE, HEAVY DUTY GALV.
7	4	113-115-WRCDF0187	PURCHP-0569	3/16" DROP FORGED WIRE ROPE CLIP
8	2	100-EYE5_16-18X4.625-STL	100-EYE-0009	5/16-18 X 4-11/16'' CLOSED EYE BOLT WITH NUT, 2-1/2'' THREAD, ZINC-PLATED STEEL
9	6	113-S-11160BL	CT26175B	26" REUSABLE NYLON CABLE TIE

ERP Part No.	TITLE:	DWG. NO.	REV
Undefined	Hardware Kit, College Discus/Hammer, Standard Rotating Gate	TFDHC-GATE-HD	B
		DRAWN BY LRM / Revision Date 11/12/2018	SHEET 4 OF 7

Bill of Material (BOM) Reference

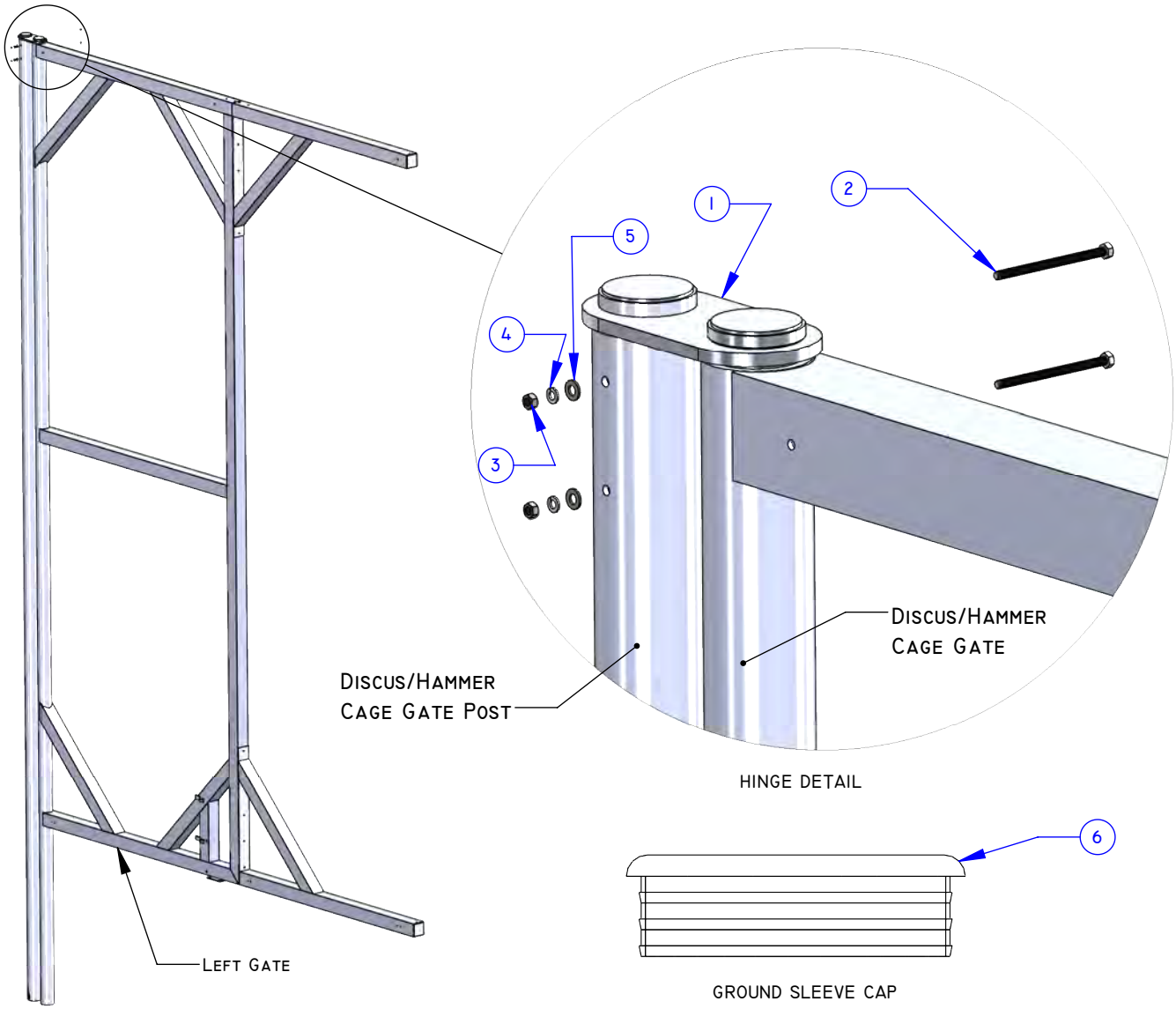

INSTALL NOTES:

1. CONNECT THE GATE TO THE GATE POST USING THE DOOR HINGE AND ASSOCIATED HARDWARE BEFORE INSERTING GATE INTO DUAL GROUND SLEEVE
2. GROUND SLEEVE CAPS ARE PROVIDED IF GATES ARE REMOVED FOR STORAGE

ITEM NO.	QTY.	DRAWING NUMBER	SAP PART NUMBER	DESCRIPTION
1	1	DHC-GATEPOST-HINGE	E-0018-S014	Door Hinge, Hammer/Discus Cage
2	2	101-HHC5_16-18X5-SS	101-HHC-0051	5/16-18 x 5.00'' Hex Head Bolt, 304 SS
3	2	107-HXN5_16-18-SS	107-HXN-0023	5/16-18 S.S. Hex Nut
4	2	110-SLW5_16-SS	110-SLW-0007	5/16 S.S. Lock Washer
5	4	110-FLW5_16-SS	110-FLW-0007	5/16 S.S. Flat Washer
6	2	114-GS-04-CAP	PURCHP-0318	Black Plastic Cap for 4.3'' O.D. Ground Sleeve

ERP Part No.	TITLE:	DWG. NO.	REV
Undefined	Hardware Kit, College Discus/Hammer, Standard Rotating Gate	TFDHC-GATE-HD	B
		DRAWN BY LRM / Revision Date 11/12/2018	SHEET 5 OF 7

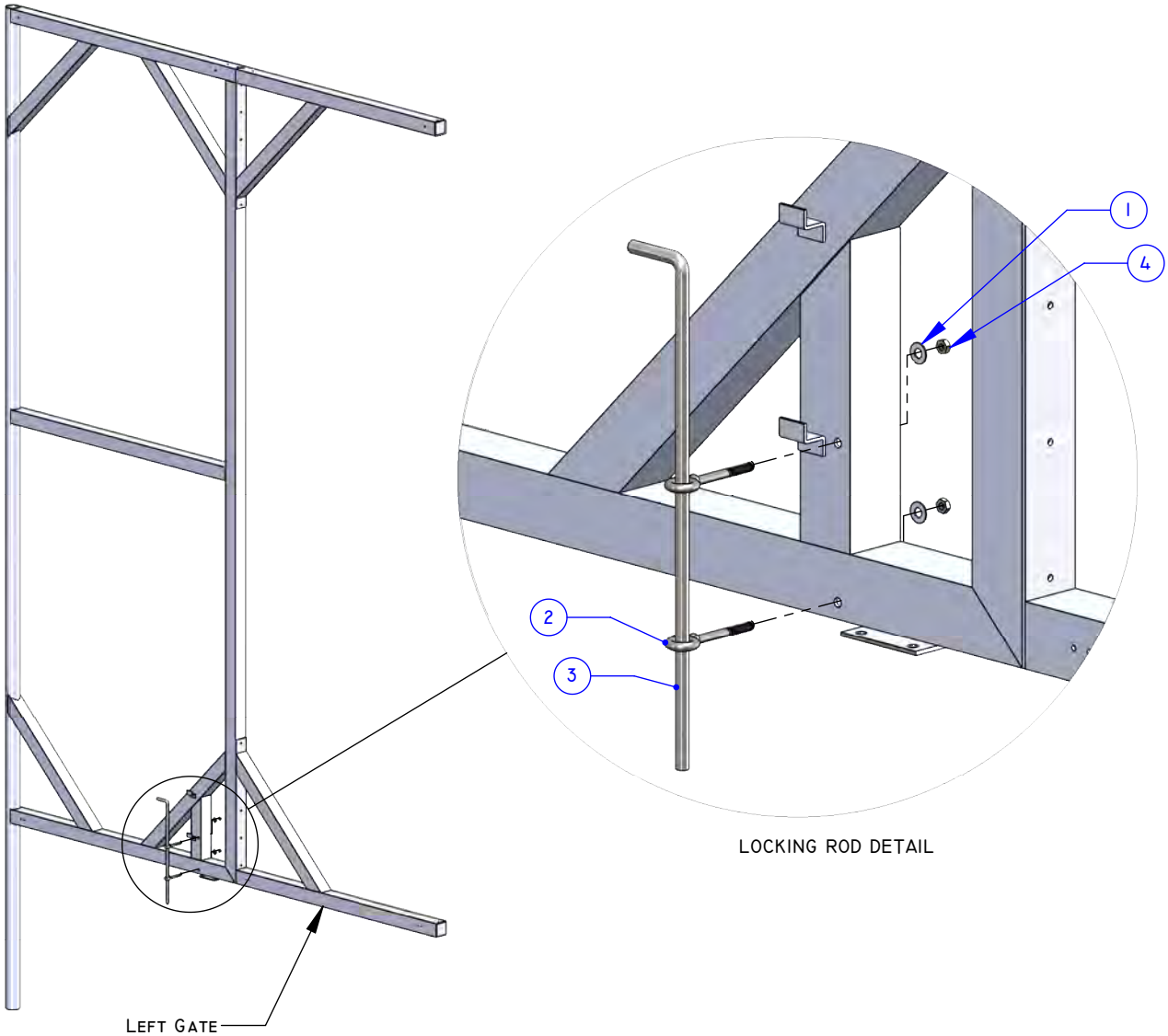

Locking Rod Detail

INSTALL NOTES:

1. AFTER MOUNTING THE LOCKING ROD TO THE GATE, MARK AND DRILL LOCATIONS FOR THE GATES IN A LOCKED POSITION
2. EACH GATE SHOULD BE ABLE TO BE LOCKED PARALLEL TO THE SECTOR AND AS PERPENDICULAR AS POSSIBLE TO THE SECTOR LINE AND NOT MORE THAN 1.5 METER INTO THE SECTOR AND AT LEAST 6 METER FROM THE CENTER OF THE CIRCLE PER COLLEGE RULES

ITEM NO.	QTY.	DRAWING NUMBER	SAP PART NUMBER	DESCRIPTION
1	2	110-FLW1_2-SS	110-FLW-0001	1/2 S.S. FLAT WASHER
2	2	114-3018T29	PURCHP-0131	1/2" X 4-1/2", GALV. STEEL CLOSED EYE BOLT W/ SHOULDER
3	1	TFDHC-GATE-ROD	E-0018-S011	GATE LOCKING ROD
4	2	107-HXN1_2-13STOPNUT-SS	107-HXN-0004	1/2-13 NTE STOP NUT, SS

ERP Part No.	TITLE:	DWG. NO.	REV
Undefined	Hardware Kit, College Discus/Hammer, Standard Rotating Gate	TFDHC-GATE-HD	B
		DRAWN BY LRM / Revision Date 11/12/2018	SHEET 6 OF 7

Rotating Gate Master Hardware List

ITEM NO.	QTY.	DRAWING NUMBER	SAP PART NUMBER	DESCRIPTION
1	1	DHC-GATEPOST-HINGE	E-0018-S014	Door Hinge, Hammer/Discus Cage
2	19	110-FLW3_8-SS	110-FLW-0005	3/8 S.S. FLAT WASHER
3	8	101-HHC3_8-16X5.5-SS	101-HHC-0039	3/8-16 x 5.5'' Hex Head Bolt, 304 SS
4	11	110-SLW3_8-SS	110-SLW-0006	3/8-16 S. S. Lock Washer
5	14	107-HXN3_8-16-SS	107-HXN-0020	3/8-16 STAINLESS STEEL HEX NUT
6	1	SG4910-Channel	E-1004-S008	4 Hole Connecting Channel, 3.600" Wide x 3.0" High x 12.0" Long
7	4	100_HWH3_8_16X1_SER_CS_BP	100-HWH-0002	3/8-16 x 1'' Hex Washer Head with serrated flange, Grade 5, Fully Threaded
8	1	114-R-8012-SU	PURCHP-0344	Rigd, hard rubber caster w/side brake, 12" x 2.75"
9	10	110-FLW1_2-SS	110-FLW-0001	1/2 S.S. FLAT WASHER
10	4	110-SLW1_2-SS	110-SLW-0001	1/2 S.S. LOCK WASHER
11	4	107-HXN1_2-13-SS	107-HXN-0003	1/2-13 Stainless Steel Hex Nut
12	4	101-HHC1_2-13X2-SS	101-HHC-0005	1/2-13 x 2'' hex head bolt, 304 SS
13	6	107-HXN1_4-20ACORN-SS	107-HXN-0006	1/4-20 S.S. Low Crown Acorn Nut
14	3	Rope Cleat	E-1000-0013	Steel Rope Cleat
15	6	101-HHC1_4-20X4.50-SS	101-HHC-0025	1/4-20 x 4.5'' Hex Head Bolt, 304 SS
16	6	110-FLW1_4-SS	110-FLW-0002	1/4" S.S. FLAT WASHER
17	6	110-SLW1_4-SS	110-SLW-0002	1/4 SS LOCK WASHER
18	3	113-BLOCKWR300-02548	PURCHP-0026	1/4" Swivel Block Pulley
19	6	113-S-11160BL	CT26175B	26" Reusable Nylon Cable Tie
20	23	113-209860	PURCHP-0009	5/16" Spring Hook
21	3	TFDHC-GATE-BRACKET	E-0018-S008	Gate Pulley Bracket, Hammer/Discus Cage
22	3	100-EYE3_8-16X2.5-OPEN-STL	E-1000-0024	3/8-16 x 2.5" Long Open Eye Bolt
23	5	101-HHC5_16-18X5-SS	101-HHC-0051	5/16-18 x 5.00'' Hex Head Bolt, 304 SS
24	7	107-HXN5_16-18-SS	107-HXN-0023	5/16-18 S.S. Hex Nut
25	7	110-SLW5_16-SS	110-SLW-0007	5/16 S.S. LOCK WASHER
26	9	110-FLW5_16-SS	110-FLW-0007	5/16 S.S. FLAT WASHER
27	3	DHC-Gate Pulley Tether	TETHER-45	Tether for DHC Gate
28	1	113-VGACB187	PURCHP-0048	1/4" Black Vinyl Coated Wire Rope
29	2	113-211160	PURCHP-0010	1/4" Thimble, Heavy Duty Galv.
30	4	113-115-WRCDF0187	PURCHP-0569	3/16" Drop Forged Wire Rope Clip
31	2	100-EYE5_16-18X4.625-STL	100-EYE-0009	5/16-18 x 4-11/16'' CLOSED Eye Bolt with Nut, 2-1/2'' Thread, Zinc-plated Steel
32	2	114-3018T29	PURCHP-0131	1/2" X 4-1/2", Galv. Steel Closed Eye Bolt w/ Shoulder
33	1	TFDHC-GATE-ROD	E-0018-S011	Gate Locking Rod
34	2	107-HXN1_2-13STOPNUT-SS	107-HXN-0004	1/2-13 NTE Stop Nut, SS
35	2	DHC-Wheel Shim	E-0018-S041	Hammer/Discus Cage Wheel Shim, Painted Black

ERP Part No.	TITLE:	DWG. NO.	REV
Undefined	Hardware Kit, College Discus/Hammer, Standard Rotating Gate	TFDHC-GATE-HD	B
		DRAWN BY: LRM — Revision Date: 11/12/2018	SHEET 7 OF 7

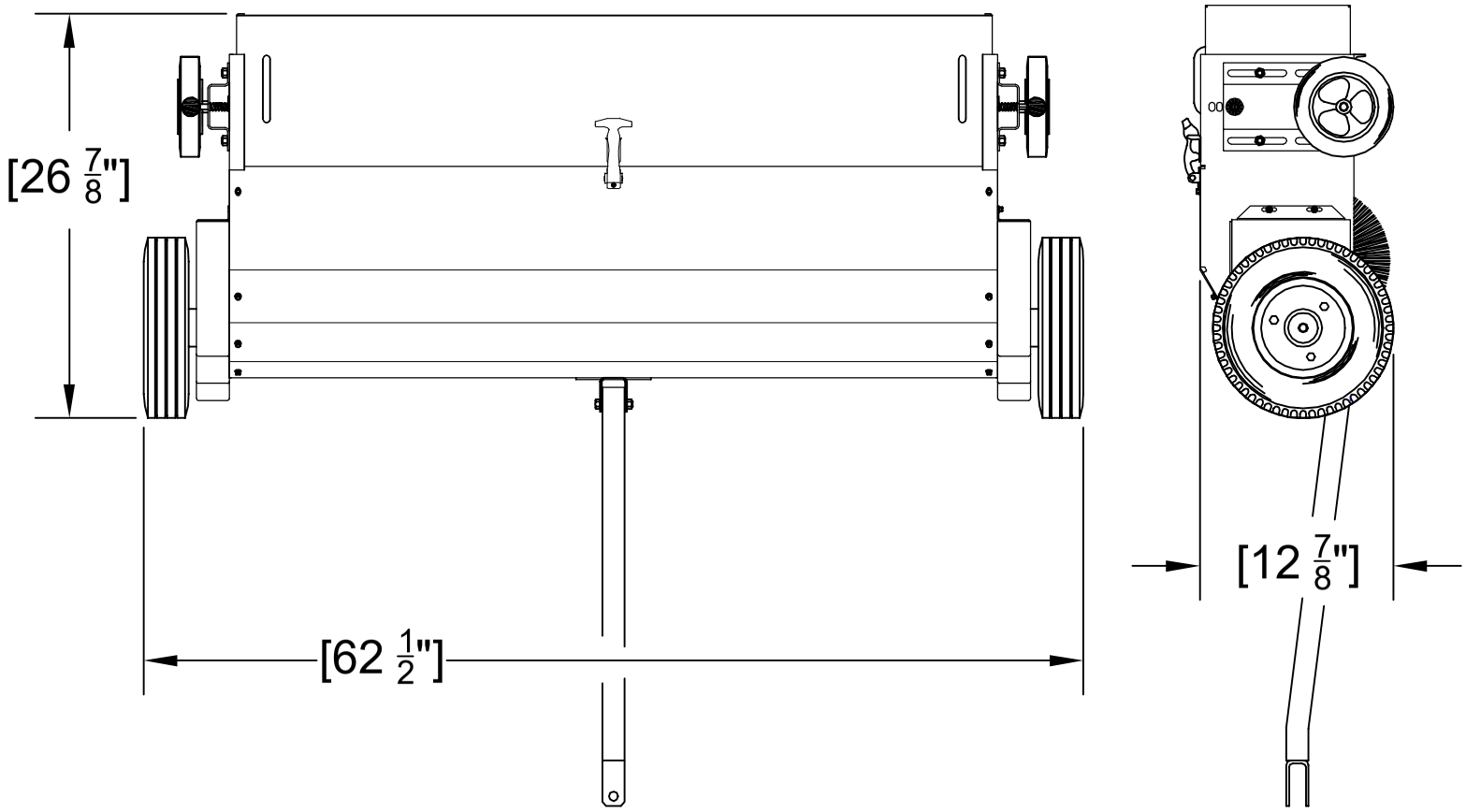

		UNLESS OTHERWISE SPECIFIED:		NAME	DATE
		DIMENSIONS ARE IN INCHES TOLERANCES: FRACTIONAL ± ANGULAR: MACH ± BEND ± TWO PLACE DECIMAL ± THREE PLACE DECIMAL ±	DRAWN	K. MARSH	3/12/2018
			CHECKED		
			ENG APP		
			MFG APPR.		
		INTERPRET GEOMETRIC TOLERANCING PER:	Q.A.		
		MATERIAL	COMMENTS:		
NEXT ASSY	USED ON	FINISH			
APPLICATION		DO NOT SCALE DRAWING			

PROPRIETARY AND CONFIDENTIAL

THE INFORMATION CONTAINED IN THIS DRAWING IS THE SOLE PROPERTY OF ALLIED ENGINEERED PRODUCTS. ANY REPRODUCTION IN PART OR AS A WHOLE WITHOUT THE WRITTEN PERMISSION OF ALLIED ENGINEERED PRODUCTS IS PROHIBITED.

ALLIED ENGINEERED PRODUCTS

TITLE:

48" TURF SWEEPER ASSEMBLY

SIZE	DWG. NO.	REV
A	15527-01	1

SCALE: 1:12.5 WEIGHT: SHEET 1 OF 4

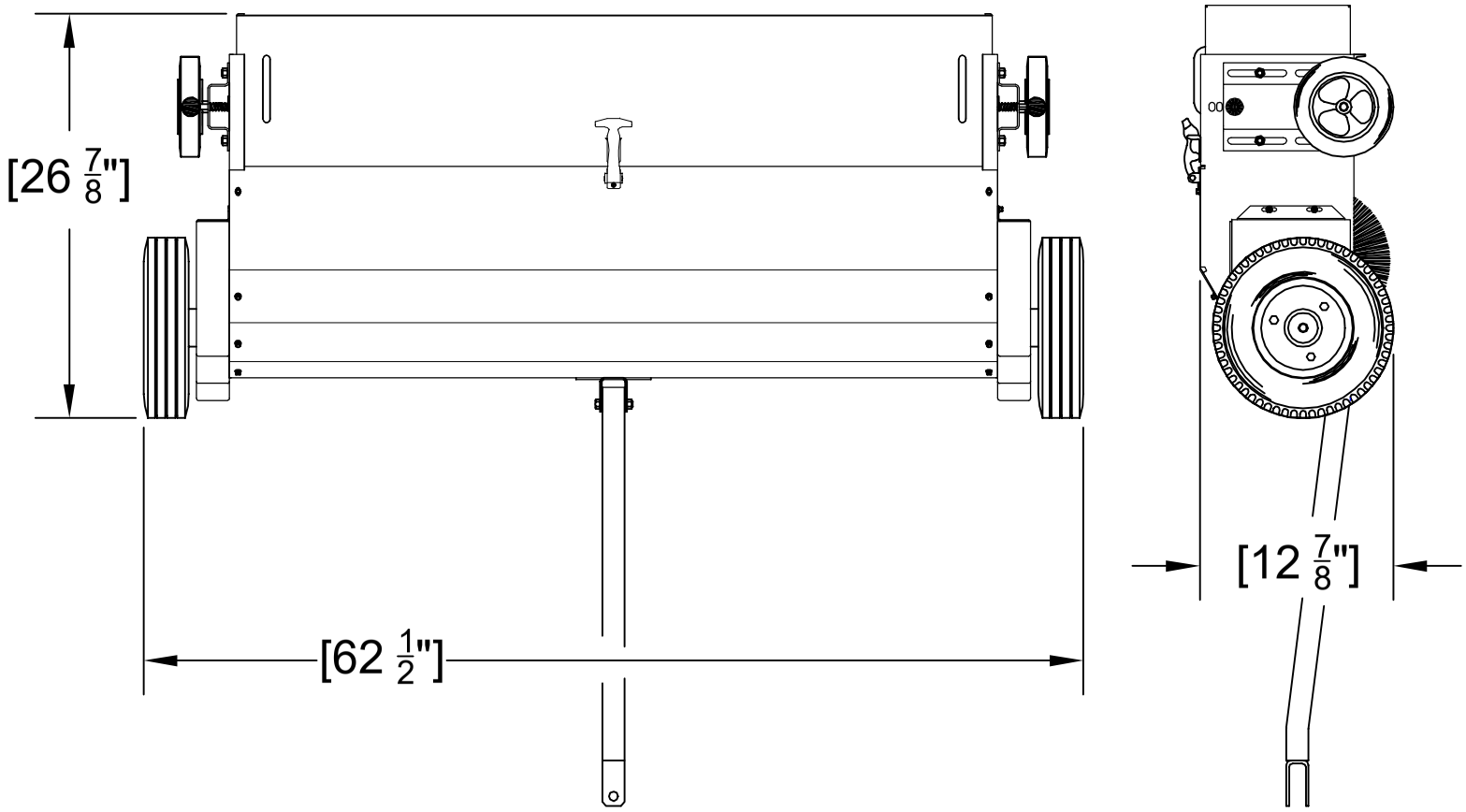

		UNLESS OTHERWISE SPECIFIED:		NAME	DATE
		DIMENSIONS ARE IN INCHES TOLERANCES: FRACTIONAL ± ANGULAR: MACH ± BEND ± TWO PLACE DECIMAL ± THREE PLACE DECIMAL ±	DRAWN	K. MARSH	3/12/2018
			CHECKED		
			ENG APP		
			MFG APPR.		
		INTERPRET GEOMETRIC TOLERANCING PER:	Q.A.		
		MATERIAL	COMMENTS:		
NEXT ASSY	USED ON	FINISH			
APPLICATION		DO NOT SCALE DRAWING			

PROPRIETARY AND CONFIDENTIAL

THE INFORMATION CONTAINED IN THIS DRAWING IS THE SOLE PROPERTY OF ALLIED ENGINEERED PRODUCTS. ANY REPRODUCTION IN PART OR AS A WHOLE WITHOUT THE WRITTEN PERMISSION OF ALLIED ENGINEERED PRODUCTS IS PROHIBITED.

ALLIED ENGINEERED PRODUCTS

TITLE:

48" TURF SWEEPER ASSEMBLY

SIZE	DWG. NO.	REV
A	15527-01	1

SCALE: 1:12.5 WEIGHT: SHEET 1 OF 4

Specifications

Dimensions:		**With Extensions**
Overall Width:	**72.178”**	**186.000”**
Length (Hitch to Rear):	**154.457”**	**154.457”**
Height (Jack Handle to Ground):	**40.670”**	**40.670”**
Weight:	**500 lbs.**	**700 lbs.**
Construction Type:	**Steel**	
Exterior Finish:	**TGIC Polyester Powder Coat**	
Brush Specifications:	**Combo Poly**	
Tines:	**1/8” Spring Steel**	
Tow Hitch Locking Pin Size (Not Provided):	**3/4” x 2-1/2” Steel**	

Specifications

Dimensions:

Overall Width:	**89”**
Length (Tow Hitch to Rear):	**67”**
Height:	**16”**

Weight:	**550 lbs.**
Construction Type:	**Steel and Aluminum**
Exterior Finish:	**TGIC Polyester Powder Coat**
Rotating Brush Type:	**6’W Helical, Combo Poly**
Tow Hitch Locking Pin Size (Not Provided):	**3/4” x 2-1/2” Steel**

Specifications

Dimensions:

Overall Width:	**95.125”**
Length (Tow Hitch to Rear):	**52.25”**
Height:	**8.625”**

Weight:	**150 lbs.**
Construction Type:	**Steel and Aluminum**
Exterior Finish:	**TGIC Polyester Powder Coat**
Tow Hitch Locking Pin Size (Not Provided):	**3/4” x 2-1/2” Steel**

FieldTurf®
A Tarkett Sports Company

Synthetic Turf Maintenance Equipment

GroomRight

OWNERS/OPERATING MANUAL

SPORTSFIELD SPECIALTIES
WWW.SPORTSFIELDSPECIALTIES.COM

Manufactured Exclusively for FieldTurf® by Sportsfield Specialties, Inc.

CONGRATULATIONS

Thank you for purchasing a FieldTurf® Synthetic Turf Maintenance product. This piece of equipment has been designed for specific use on in-filled, synthetic turf systems. To ensure years of dependable service this product has been designed and manufactured to the highest quality standards available in the industry today.

This Synthetic Turf Maintenance Equipment is designed with safety in mind, however if the equipment is operated carelessly and/or not as instructed it can be dangerous. With this in mind, we recommend that each and every operator of this equipment familiarize themselves with the owners/operating manual prior to initial use. The upfront time spent on acquainting themselves with the safe operation, performance and minimal required maintenance, will ensure long life of this equipment.

Our goal is to ensure that you as the end user are satisfied with this synthetic turf maintenance equipment. While the design and illustrations used in this manual were current at the time of manual printing, we reserve the right to incorporate design improvements in future products without changing products previously manufactured. These improvements are important to ensure that customer feedback and industry changes are incorporated into future products.

SAFETY SYMBOLS

This is a standard safety alert symbol meaning **ATTENTION! BECOME ALERT! YOUR SAFETY IS INVOLVED!**

CAUTION Indicates hazardous situation, injury may occur, used to alert against carelessness.

WARNING Indicates potentially hazardous situation. Death or serious injury may occur if proper procedures are not followed.

DANGER Indicates most hazardous situation. Death or serious injury will occur if proper procedures are not followed.

TABLE OF CONTENTS

SAFETY INFORMATION …….. 4

SETUP…….. 5-7

OPERATION…… 8-15

SPECIFICATIONS…….. 16

GENERAL ASSEMBLY (Pictorial)…… 17-19

GENERAL ASSEMBLY (Parts List)…….. 20-21

REPLACEMENT PARTS INFORMATION…….. 22

WARRANTY INFORMATION…….. 23-24

SAFETY INFORMATION

WARNING

The grooming unit wheels on this machine are extremely pointed. It is strongly recommended that two people are available when unhitching the grooming unit from the tow vehicle. Never place feet or hands under this unit even when in a stationary position.

DANGER

The GroomRight is not designed to carry human occupants. Doing so is at the owner's risk. The manufacturer of this unit is not responsible for injuries, permanent disabilities or fatalities that may be a result of this occurrence.

CAUTION

The GroomRight is not designed to be towed at high speed across non synthetic turf surfaces. Excessive speed can damage the unit and create an unsafe condition.

CAUTION

Wood crating contains nails and may splinter during removal from the sweeper system. Operator should wear gloves and eye protection to minimize potential for injury.

SETUP

Uncrating – The **GroomRight** is packaged to ensure that damage does not occur during the shipping process. While the packaging is more than adequate to handle the normal bumps and shifts in loads during transit, in rare cases damage may occur.

Upon receipt of the **GroomRight** please inspect the packaging and unit to ensure that they are damage free. It is the customer's responsibility to document damage prior to the departure of the shipping company and file a claim if appropriate.

After inspecting the unit, carefully remove the packaging/crating.

CAUTION

Wood crating contains nails and may splinter during removal from the sweeper system. Operator should wear gloves and eye protection to minimize potential for injury.

Lifting and Re-Assembly – Eye Bolts are provided in each frame corner of the **GroomRight** to assist in lifting the unit. Properly rated straps and/or chains can be attached to the eyes to lift the unit off the shipping truck or it can be removed by forklift if available. The **GroomRight** weighs approximately 500 lbs. so caution must be taken when lifting to ensure that the unit is properly balanced.

WARNING

This unit weighs 500 lbs., lift with caution. Verify that the lifting equipment is rated properly and secured to the unit prior to the lift. The manufacturer of this unit is not responsible for injuries, permanent disabilities or fatalities that may result from the use of improper lifting equipment.

Once on the ground the tow hitch will need to removed from its packaging and assembled to the front of the unit. To do this remove the bubble wrap and position the hitch as shown in **Picture 1**. The hardware to mount the hitch is already in place at the attachment points, please remove and then reinstall once the hitch is in place, ensuring that all hardware and spacers are properly located, **Picture 2** (also see assembly drawings at back of manual). Once the hitch is secured assemble the lifting jack which controls the grooming unit height, **Picture 3**. To do this remove the safety pins at the attachment points, top and bottom and position lifting jack. Install safety pin at bottom, **Picture 4** flipping locking clasp in place followed by the installation of the top pin, again flipping locking clasp in place.

WARNING

The GroomRight weighs 500 lbs., it is critical that all locking pins are in place and locked when being moved. Never place feet or hands under the unit when in the lifted position.

Hitching to Tow Vehicle – The **GroomRight** is designed to be towed by any small tow vehicle ranging from a small garden tractor to a Gator® or larger vehicle. To transport the unit simply rotate the hitch forward and attach to the tow vehicle with the ¾" x 2 ½" pin (not provided). Prior to towing the vehicle verify that all components are in the full-up position providing approximately 2" to 3" of ground clearance for the **GroomRight** grooming components. If any appear to be lower please adjust accordingly with the 2 positioning jacks, **Picture 1.**

Picture 1

Picture 2

Picture 3

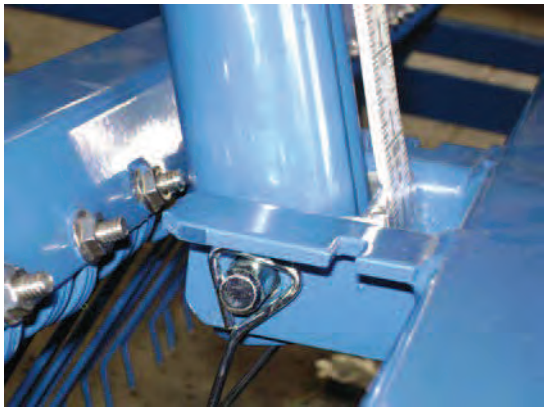

Picture 4

Once the components are verified to be in the full-up position, the unit is ready for towing.

WARNING

The GroomRight weighs 500 lbs. It is critical that all locking pins are in place and locked when being moved. Never place feet or hands under the unit when in the lifted position.

CAUTION

The GroomRight is not designed to be towed at high speed across non synthetic turf surfaces. Excessive speed can damage the unit and create an unsafe condition.

DANGER

The GroomRight is not designed to carry human occupants. Doing so is at the owner's risk. The manufacturer is not responsible for injuries, permanent disabilities or fatalities that may be a result of this occurrence.

OPERATION

GROOMRIGHT COMPONENTS – The **GROOMRIGHT** is made up of two specific components each individually adjustable allowing for individual or multiple component usage.

Grooming Component – Star wheels designed to loosen the infill components without damage to the synthetic fibers, located at center of unit, **Picture 5.**

Brush & Tine Component – The brush and tines, are designed to remove any rowing effect caused by components while at the same time lifting the exposed fibers preventing matting, located at both front and rear of the unit, **Picture 6.**

Picture 5

Picture 6

Individual component operation is detailed further in the following pages.

GROOMING COMPONENT OPERATION

SAFETY INFORMATION

Picture 7

WARNING

The grooming wheels on this unit are extremely pointed.

Lowering Grooming Stars and Spring Tines - Once the **GroomRight** is towed to the location of the synthetic infill turf field the unit must be carefully lowered to the desired position. Lowering of the unit is accomplished with the jack located on the **GroomRight** Grooming Component, **Picture 8**. Simply rotate the knob to lower the Grooming Component star wheels, monitoring the Indicator Strip located on the jack, **Picture 9. A**ll markings only are used for reference only as depth of infill varies greatly from field to field.

Prior to adjusting the height of the Grooming Component, please measure the infill depth at multiple locations on the field. Utilize this information to determine the reference setting which makes most sense for you FieldTurf synthetic infill turf field. It is recommended that the maximum depth of the star wheel penetration be three-fourths of an inch (3/4”), easily determine by measuring and marking the outside star wheel.

The height of the spring tines can also be set so that the tines work in conjunction with the Grooming Component star wheels, **Picture 12**. It is recommended that the spring tines penetrate the infill no more than ½”, maximum.

Picture 8

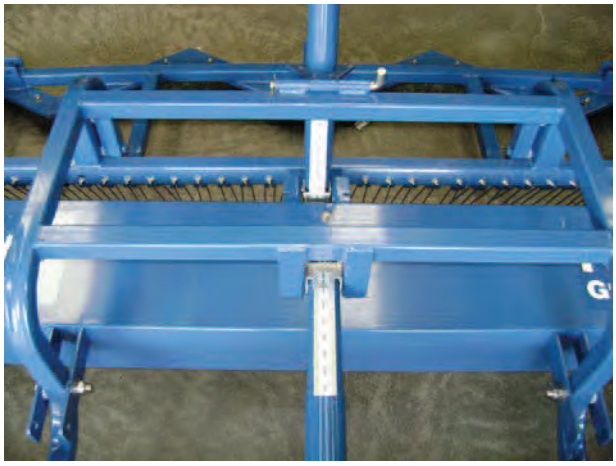

Picture 9

CAUTION

It is critical that you measure the depth of your synthetic turf infill, prior to using this component of the GroomRight system. Infill materials can and do vary in height requiring caution when using the Grooming Component. The manufacturer of this unit is not responsible for damage to synthetic infill turf caused by avoidance of this requirement. Remember the increments on the Indicator Strip do not indicate depth of penetration but rather are provided for your convenience once you have experience with your field.

WARNING

The star wheels on the Grooming Component are spiked to ensure that they work into the infill, loosening it without damaging fibers. Due to this it is critical that no one is near the unit during the grooming operation. Serious injury can occur if feet or hands get caught underneath.

Preparing the GroomRight Grooming Component for Transport – Once grooming is complete the Grooming Component star wheels must be raised off the synthetic infill turf field. To do this rotate the handle on the positioning jack until the Indicator Strip is at its highest point. If the spring tines were adjusted these will need to be raised as well.

Maintenance – The Grooming Component requires minimum maintenance, however periodic inspection is recommended in order to ensure parts have not come loose. The unit is lubricated during production although occasional lubrication may be necessary for moving parts only.

Frequency of Use – The Grooming Component star wheels should be used every 6-8 weeks.

BRUSH COMPONENT OPERATION

Adjusting Brush Height –Utilize the manual positioning jack to lower and raise the brush and tine assemblies, **Picture 10.** Prior to adjustment the brushes should be at a height of 2” to 3” off the ground depending on the infill depth and height of the synthetic fibers, see **Picture 11.** In **Picture 11** the unit has been lowered to the point where the brushes are just touching the surface to be groomed, the adjustment required will vary from field to field.

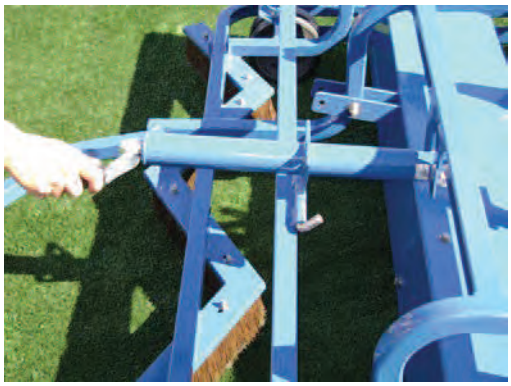

Picture 10

Picture 11

Full brush contact provides optimum grooming, however also increases the brush wear, accelerating the potential replacement cycle. Since each field, grounds staff, sport and coach are different the adjusted height of the Brush Component will be dictated by the perceived appearance once the grooming is complete.

Adjusting Tine Height – The spring tines are designed to be adjusted in conjunction with either the Brush or Grooming Component. The tines have limited adjustment to ensure that they do not exceed a depth of ½” into the infill. To adjust simply loosen the spring loaded adjuster by pulling out and rotating in the appropriate direction, **Picture 12.** Retighten the hardware once located in the desired position. Use the Indicator Strip as a guideline, **Picture 13**, once an acceptable depth has been achieved.

Picture 12

Picture 13

IMPORTANT NOTE: Since these tines can be more aggressive than the brushes it is important that they be carefully adjusted during first use and checked prior to each use thereafter!!!

Preparing the Brush Component for Transport – Once grooming is complete the Brush Component must be prepared for transport away from the synthetic infill turf field. To do this please rotate the jacking device in the opposite direction until the brush/tine assembly is at the maximum height**.**

Checking the Brush Component for Wear – Periodically check brush length and tines to determine if replacement is warranted.

Maintenance - The Brush Component requires minimum maintenance, however periodic inspection is recommended in order to ensure parts have not come loose. The unit is lubricated during production although occasional lubrication may be necessary for moving parts only; at pivots and the tine assembly pivots.

Periodic inspection of the alignment of the raking tines is also recommended as the tines can become severely bent. Re-bending to the correct position is possible, however over time the tines can break requiring replacement.

Frequency of Use – Pass the Brush Component with only the tines over the entire field surface a minimum of once every 4 - 6 weeks. This procedure will groom the fibers and infill to prevent the fibers from matting down an excessive amount and will keep the infill loosened up to maximize drainage characteristics. The object is to put only slight pressure on the tines in order to have them go into the surface just enough to lift the fibers up from a more flattened position and to turn the very top of the infill. It is recommended that they do not exceed ½" of penetration into the infill.

Use the Brush of the Brush Component every 6 – 8 weeks.

GROOMRIGHT CONVERSION TO BRUSH ONLY SYSTEM

Converting the unit from a multi-purpose unit to a brush only system requires the availability of a two maintenance personnel. While every effort has been made to simplify this process it still requires lifting the main unit over the Grooming Unit (center portion of the **GROOMRIGHT** product).

To remove the Grooming Unit it is important to first ensure that the unit has been lowered to a point where the star wheels are touching the ground. To do this simply rotate the handle on the Grooming Unit jack in the appropriate direction. Once grounded remove both the top and bottom safety pins located on the jack, **Picture 14.** It is easiest to remove the top pin first, followed by the bottom pin; reinstallation should be done in a reverse sequence, **Picture 15**. Simply flip the safety clasp away from the pin and pull the pin in two locations, allowing the removal of the entire jack system.

WARNING

The grooming wheels on this unit are extremely pointed.

Picture 14

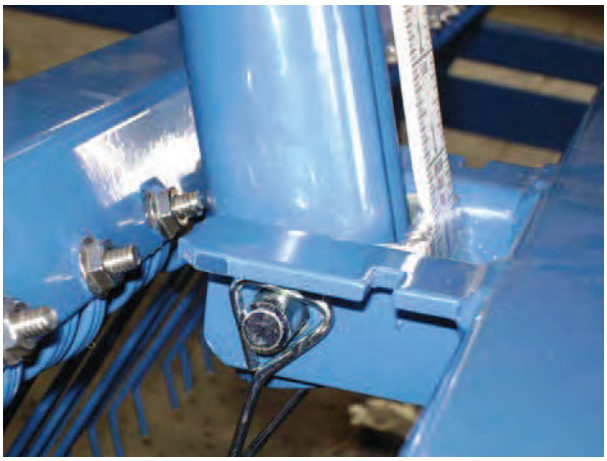

Picture 15

Once the jack has been removed it is necessary to lift the main unit over the Grooming Unit. This requires a minimum of two people each located at the right rear corners of the main frame, **Picture 16**. Securely grab the frame with two hands and slide the main unit forward until it clears the Grooming Unit, **Picture 17**.

CAUTION

Always observe property lifting techniques when lifting heavy objects. A two person lift requires coordination to ensure evenness of load.

Picture 16

Picture 17

Once cleared reinsert the lower safety pin in the Grooming Unit to ensure that it does not get lost during unit storage. The top pin should be reinserted in the appropriate location on the main unit. Note that Grooming Unit is unstable when uninstalled from the main unit, it is important that this be stored in a manner which keeps it from tipping over. This will minimize paint damage as well as an unintended exposure to the pointed star wheels.

The main unit is now ready for the installation of the optional wing/brush extensions, fully assembled with wings down in **Picture 18,** up and locked in **Picture 19** (Grooming Unit is installed for clarity).

Picture 18

Picture 19

To install the wing/brush extensions carefully remove the bubble wrap if necessary from both wings, locate the included hardware and position the wing to the main unit ensuring that the tines on the extension are to the rear of the unit (simply match the wing tines to the Grooming Unit tines).

Once complete slide the extension towards the main unit, lining up the two lower bolt locations lower and upper right hand corner of **Picture 20.** Install the provided hardware noting nylon washer location. Once both lower bolts are tightened install the hardware for the extension arm located at the top portion of the main unit, right-center on **Picture 20.** Once complete the extension can be rotated to the Transport Position by simply removing the safety locking pin located on the center support, lifting the extension arm and reinstalling the safety locking pin as shown in **Picture 21**. Follow the same procedure on the other side of the main unit.

Picture 20

Picture 21

CAUTION

While the Extension Arms are lightweight they can be awkward to raise and lower. Please grab the outside of the extension arm firmly to raise or lower the extension.

WARNING

The Extension Arm must be pinned in the vertical position with the lock pin fully engaged and the safety clip fully fastened around the pin, Picture 3. Failure to do so could result in the Extension Arm falling during transport potentially injuring bystanders and/or the tow vehicle operator.

Adjusting Brush Height – Once both extension arms have been lowered utilize the manual crank assembly, located on the main unit, to adjust the height of the brush assemblies, **Picture 10.**

Adjusting Tine Height – The spring tines on the brush extensions are designed to be adjusted independently from the brushes using the same hardware as those on the main unit, **Picture 12**.

Specifications

		With Extensions
Dimensions:		
Overall Width:	**72.178”**	**186.000”**
Length (Hitch to Rear):	**154.457”**	**154.457”**
Height (Jack Handle to Ground):	**40.670”**	**40.670”**
Weight:	**500 lbs.**	**700 lbs.**
Construction Type:	**Steel**	
Exterior Finish:	**TGIC Polyester Powder Coat**	
Brush Specifications:	**Combo Poly**	
Tines:	**1/8” Spring Steel**	
Tow Hitch Locking Pin Size (Not Provided):	**3/4” x 2-1/2” Steel**	

GENERAL ASSEMBLY (Pictorial)

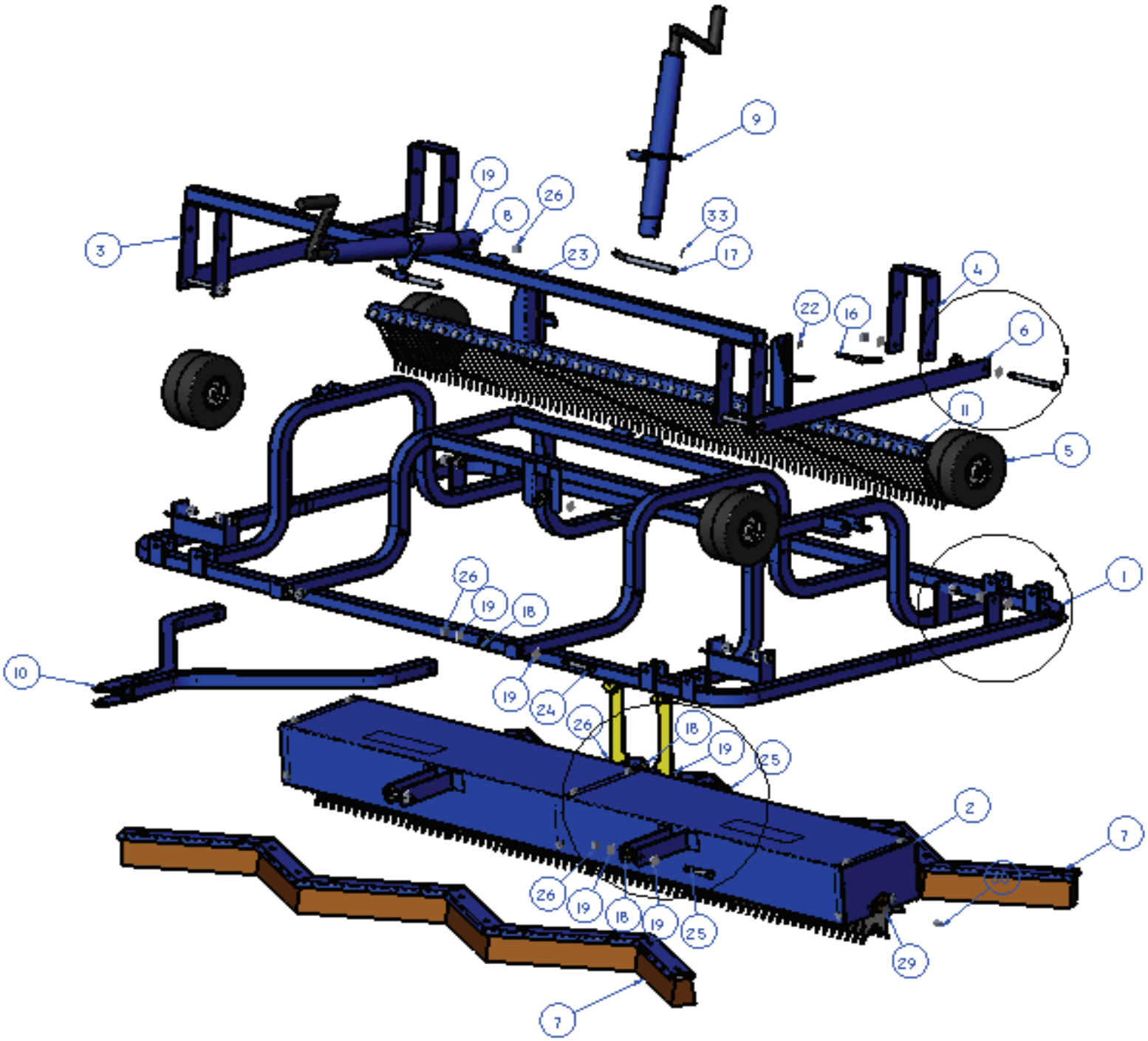

GENERAL ASSEMBLY (Details)

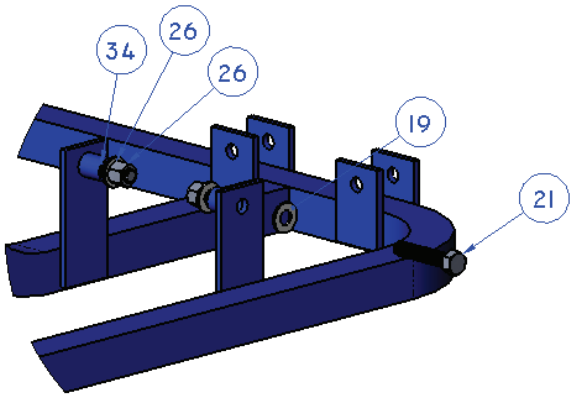

Detail A

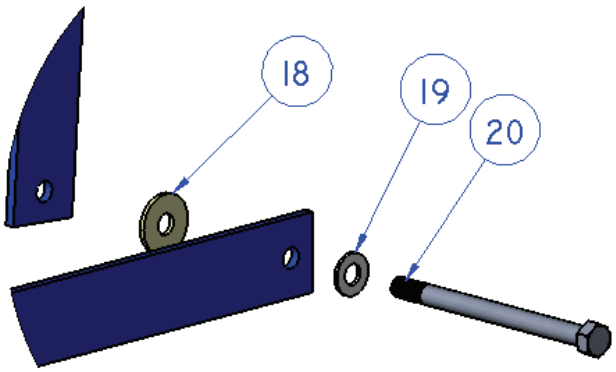

Detail B

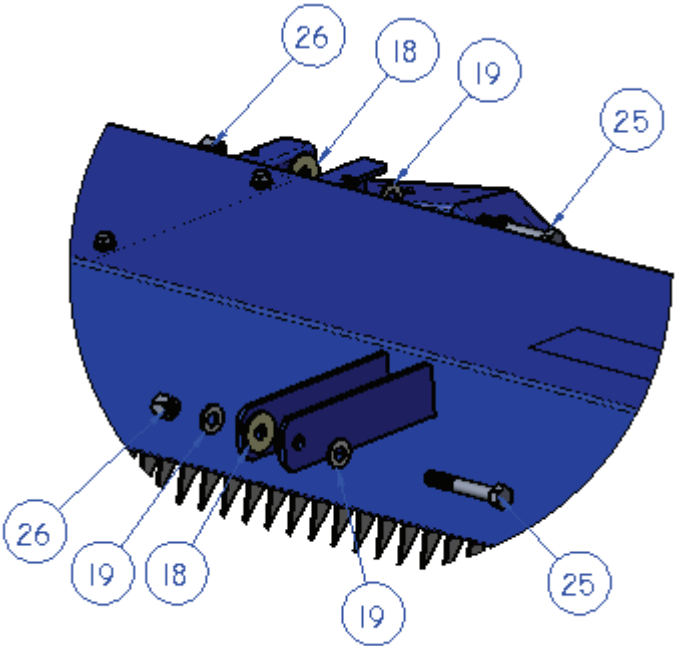

Detail C

EXTENSION WING DETAILS

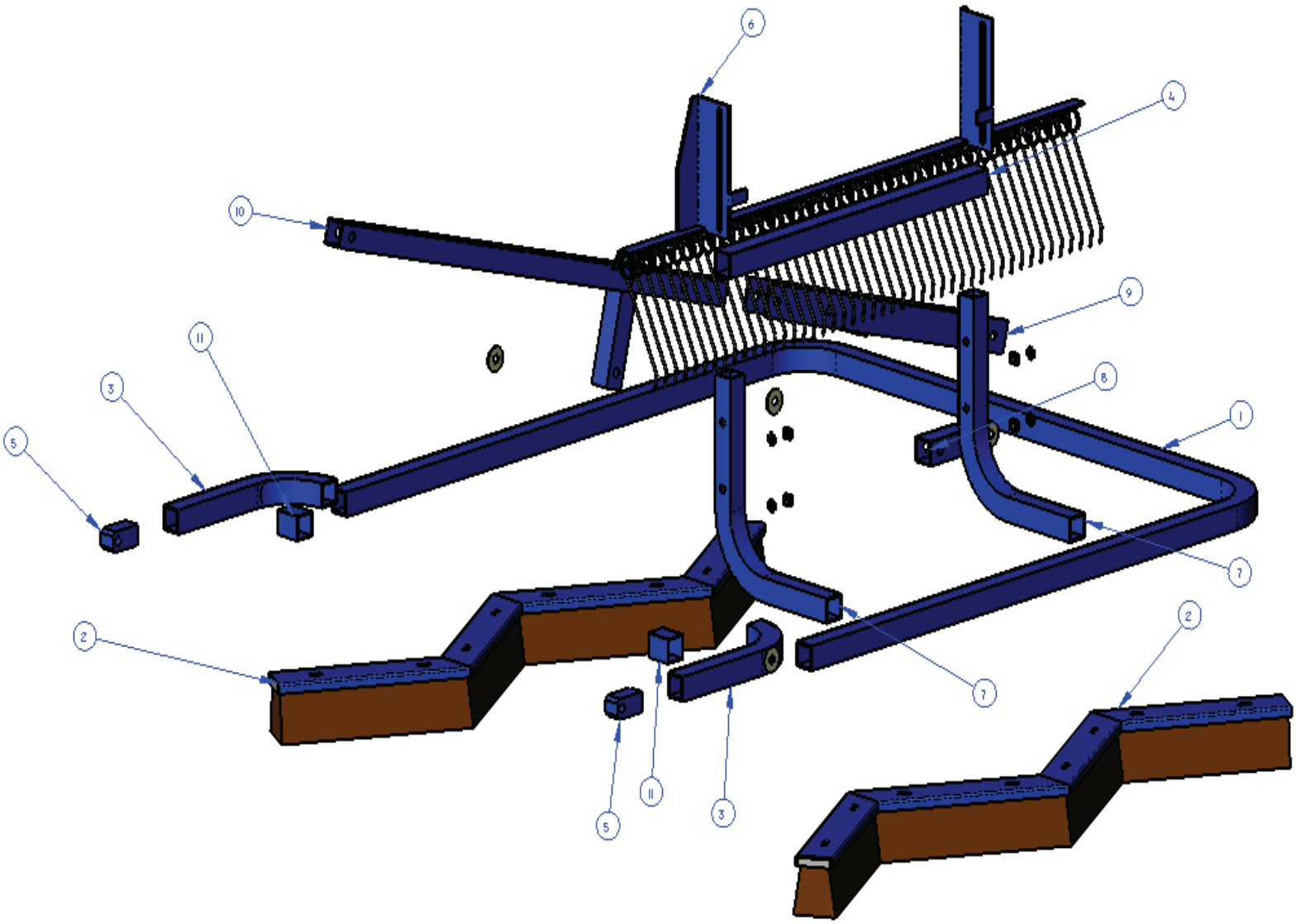

GENERAL ASSEMBLY (Bill of Material)

ITEM NO.	QTY.	PART NO.	WEIGHT	MATERIAL
1	1	FTTP-FRAME	142.81	STEEL
2	1	FTTP-RT	178.039	STEEL
3	1	FTTP-FRAME-SWINGARM	16.997	STEEL
4	2	FTTP-FRAME-SWINGARM	3.292	STEEL
5	8	114-2319T3	2	RUBBER TREAD. CAST IRON HUB
6	2	BRUSH015-16	4.9	1/4 X 2 STEEL BAR
7	2	FTTP-BRUSH	36.106	P&O
8	1	FTTP-FRONT-JACK	15	STEEL
9	1	FTTP-REAR-JACK	15	STEEL
10	1	FTTP-TONGUE	14.752	STEEL
11	1	FTTP-TINE	15.972	STEEL
12	3	52-FTDECAL	0	DECAL
13	1	TANK	0.29	
14	1	TANK-01		
15	1	FTTP-FRAME-17	3.034	7 GA P&O
16	4	64835K72		
17	2	FTTP-FRAME-23	0.781	5/8" S.S. ROUND STOCK
18	14	114-NYLL2X1_5Z125FLW	0.007	NYLON
19	36	110-FLWL2-SS	0.018	STAINLESS STEEL
20	4	101-HHCL2-13X6.5-SS	0.4005	STAINLESS STEEL
21	8	101-HHCL2-13X2.5-SS	0.1682	STAINLESS STEEL
22	16	110-FLW3_8-SS	0.006	STAINLESS STEEL
23	4	114-90295A170	0.002	NYLON
24	2	101-HHCL2-13X4-SS	0.2622	STAINLESS STEEL
25	4	101-HHCL2-13X3.5-SS	0.2321	STAINLESS STEEL
26	18	107-HXNL2-13NYLOCK-SS	0.057	STAINLESS STEEL
27	12	110-SLW3_8-SS	0.006	STAINLESS STEEL
28	12	101-HHC3_8-16X.75-SS	0.0404	STAINLESS STEEL
29	12	110-FLW5_16-SS	0.011	STAINLESS STEEL
30	6	101-HHC5_16-18X.750-SS	0.0278	STAINLESS STEEL
31	6	110-SLW5_16-SS	0.004	STAINLESS STEEL
32	6	107-HXN5_16-18-SS	0.012	STAINLESS STEEL
33	2	114-92375A341	0.002	STAINLESS STEEL
34	8	FTTP-FRAME-24	0.071	1/2" SCH 40 STEEL PIPE

BRUSH EXTENSION (Bill of Material)

ITEM NO.	QTY.	PART NO.	WEIGHT	MATERIAL
1	1	FTTP-Wing-01	26.651	1-1/2" X 1/8" SQ Tube
2	2	FTTP-WING-BRUSH	23.74	P&O
3	2	FTTP-Wing-03	2.767	1-1/2" X 1/8" SQ Tube
4	1	FTTP-Wing-02	3.135	1-1/2" X 1/8" Tube
5	2	FTTP-Wing-04	1.001	Steel
6	1	FTTP-TINE-WING-LEFT	10.778	Steel
7	2	FTTP-Wing-06	3.999	1-1/2" X 1/8" SQ Tube
8	1	FTTP-Wing-09	0.47	1-1/2" X 1/8" Tube
9	1	FTTP-LiftingArm	5.054	Steel
10	1	FTTP-LiftingLink	5.509	Steel
11	2	FTTP-Wing-12	0.24	1-1/2" X 1/8" Tube
12	4	114-2008-01		STEEL
13	5	114-NYL1_2X1_5Z125FLW	0.007	Nylon
14	4	114-90295A170	0.002	Nylon

REPLACEMENT PARTS

Your new FieldTurf® Synthetic Turf Maintenance Equipment was designed and manufactured with durability in mind, however certain "wear" components such as brushes, tines, tires, hardware, etc. will need to be replaced at some point during the equipment's lifetime. Additionally, operator based accidents with this equipment can and will happen resulting in an almost immediate need for replacement parts.

Sportsfield Specialties, Inc. is committed to maintaining available inventory to ensure that these damaged part emergencies and "wear" based replacements can be responded to immediately.

Please contact Sportsfield Specialties, Inc., on our support hotline, 888-975-3343 and request Synthetic Turf Maintenance Products Parts Assistance. Utilize the information provided on the General Assembly pages to identify both part number and description.

SPORTSFIELD SPECIALTIES, INC. 888-975-3343

Part Number: _____

Part Description: _____

To ensure quick turnaround Sportsfield Specialties, Inc. accepts credit card transactions, typically resulting in same or next day shipment.

LIMITED WARRANTY

Sportsfield Specialties, Inc. warrants this product to be free of defects in materials and workmanship for a period of twelve months from the original delivery date. This warranty does not cover components or parts caused to be deficient due to normal wear, misuse, accidents, or lack of proper maintenance.

Any parts thought to be defective must be returned to Sportsfield Specialties along with the unit for warranty consideration. The owner/operator will be responsible for the expense of returning the above items to Sportsfield Specialties for warranty service as well as the expense for returning same after repair or replacement. A Return Authorization Number must be obtained and clearly marked on all packages of parts requiring return to the factory.

The obligation of Sportsfield Specialties, Inc under this limited warranty, to the extend allowed by law, is in lieu of all warranties, implied or expressed, INCLUDING WARRANTIES OF MECHANTAILITY AND FITNESS FOR A PARTICULAR PURPOSE and any liability of incidental and consequential damages with respect to the sale or use of the items warranted. Such incidental and consequential damages shall include but not be limited to: transportation charges other than normal freight charges; cost of installation other than cost approved by Sportsfield Specialties, Inc.; duty; taxes; charges from normal service or adjustment; loss of synthetic carpet or any other income, ; rental of substitute equipment, expenses due to loss, damage, detention or delay in delivery of equipment or parts resulting from the acts beyond the control of Sportsfield Specialties, Inc.

LIMITED WARRANTY SHALL NOT APPLY:

1. If the Equipment has been subjected to misapplication, abuse, misuse, negligence, fire or other accident.

2. If parts not made by Sportsfield Specialties have been used in connection with the unit, if, in the sole judgment of Sportsfield Specialties, Inc. such use affects its performance, stability or reliability.

3. If the unit has been altered or repaired in a manner which, in the sole judgment of Sportsfield Specialties, Inc., affects its performance, stability, or reliability.

4. To normal maintenance service and normal replacement items such as brushes, tines, etc. or to normal deterioration of exterior finish due to use or exposure.

5. To expendable or wear items that in the company's sole judgment is a wear item.

This warranty gives you specific legal rights, and you may also have other legal rights which vary from state to state.

WARRANTY CARD TO BE COPIED AND MAILED OR FAXED TO (Please retain copy for your records):

Sportsfield Specialties, Inc.
Attn: Warranty Department
P.O. Box 231
41155 State Highway 10
Delhi, NY 13753
(607) 746-8481 - Fax
(888) 975-3343 - Phone

©Sportsfield Specialties Inc 2006

Customer Name: _____

Customer Address: _____

Customer Contact Information:

Phone: _____

Fax: _____

E-mail: _____

Date of Arrival at Customer Location: _____

Model Number (See Serial Plate – Front of Unit): _____

Serial Number (See Serial Plate – Front of Unit): _____

THE ABOVE WARRANTY CARD MUST BE MAILED or FAXED WITHIN TEN (10) DAYS OF RECEIPT AT OWNERS FACILITY.

FieldTurf
A Tarkett Sports Company

THE ULTIMATE
SURFACE EXPERIENCE

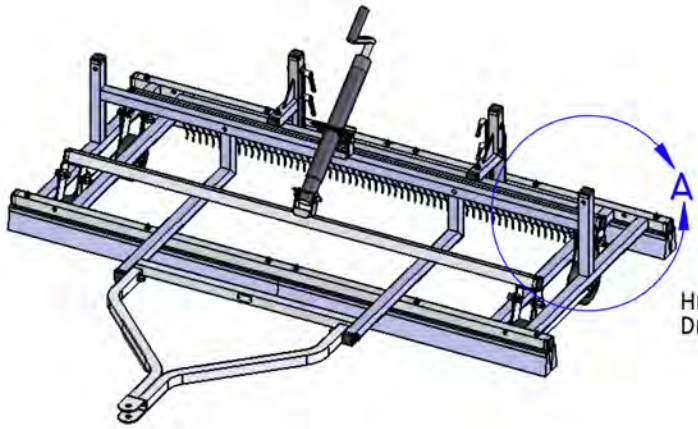

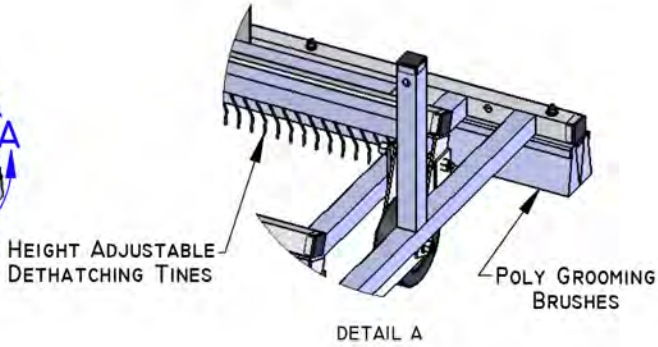

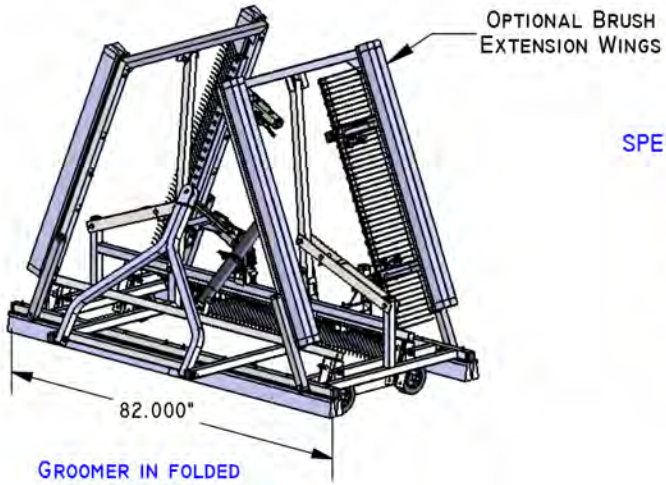

GROOMER IN FOLDED
POSITION

SPECIFICATIONS:

- *POWDER COATED STEEL CONSTRUCTION
- *TOWABLE WITH SMALL TRACTOR OR UTILITY VEHICLE
- *REVERSIBLE & REPLACEABLE GROOMING BRUSHES
- *REPLACEABLE DETHATCHING TINES
- *SIMPLIFIED HEIGHT ADJUSTMENT
- *EASILY UPGRADABLE TO 15' BRUSH
- *FULLY PORTABLE FOR OFF-FIELD STORAGE
- *APPROX. UNIT WEIGHT: 240 LBS

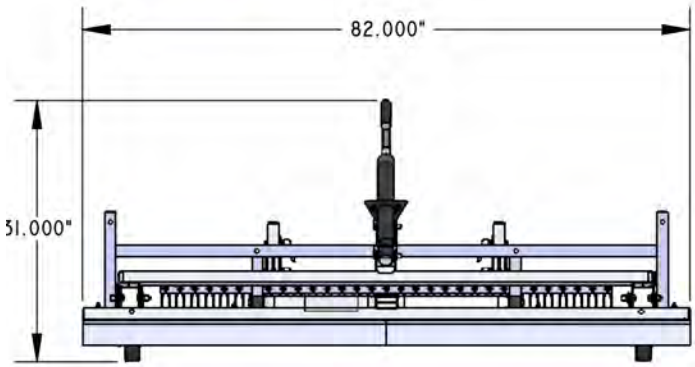

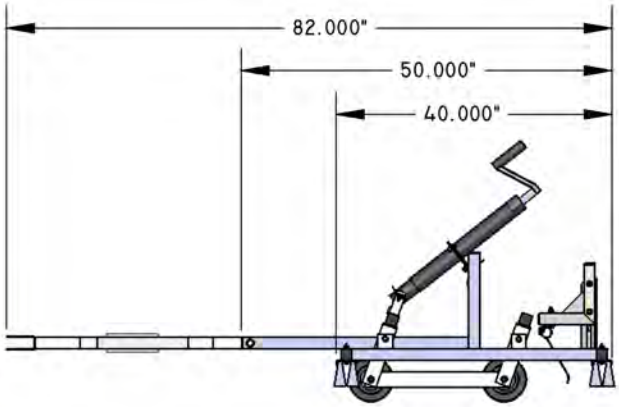

PROPRIETARY AND CONFIDENTIAL
THE INFORMATION CONTAINED IN THIS DRAWING IS THE SOLE PROPERTY OF SPORTSFIELD SPECIALTIES INC. ANY REPRODUCTION IN PART OR AS A WHOLE WITHOUT THE WRITTEN PERMISSION OF SPORTSFIELD SPECIALTIES INC. IS PROHIBITED.

FT7DB - 7' Drag Brush

NOT TO SCALE

SPORTSFIELD SPECIALTIES INC.

GROOMRIGHT™ Specifications

Dimensions :		With Extensions
Overall Width	72.178"	186.000"
Length (Hitch to Rear)	154.457"	154.457"
Height (Jack Handle to Ground)	40.670"	40.670"
Weight	500 lbs.	700 lbs.
Construction Type	Steel	
Coating Type	Powder	
Brush Specifications	Combo Poly	
Tines	1/8" Spring Steel	
Hitch Pin Size (not provided)	3/4" Steel	

Penn State's

Center for
Sports Surface Research

FieldTurf Core Lisport Wear Report

200,000 Lisport Cycles

December 2016

PennState
College of Agricultural Sciences

Center for Sports Surface Research
Department of Plant Science
The Pennsylvania State University
116 Agricultural Sciences and Industries Building
University Park, PA 16802
814-865-2571

Fiber wear testing was conducted on FieldTurf Core synthetic turf at Penn State's Center for Sports Surface Research, University Park, PA. The turf sample was supplied by FieldTurf and was exposed to a total of 200,000 cycles on a Lisport-type wear tester.

Testing Methods

The fiber wear test was conducted using a Lisport-style wear tester (pictured below). The Lisport wear tester consists of two cylinders outfitted with studs (cleats) that simluate field use. Different sprocket sizes on each cylinder allow for a sliding movement of one of the cylinders. The model used in this testing also included a sample tray that produced movement transverse to the linear movement of the cylinders, allowing for even wear across the entire sample. Each cycle is roughly equivalent to one hour of field use by users wearing cleated shoes. The method used is considered a modified version of both the European Standard for Surfaces for Outdoor Sports Areas - Exposure of Synthetic Turf to Simulated Wear (EN 15306) and the FIFA Quality Concept for Football Turf – Handbook of Test Methods (May, 2009 edition) as our machine includes plastic cleats with metal tips instead cleats made of 100% plastic. Ten fibers were randomly removed and photographed after the following number of cycles: 10,000, 20,000, 30,000, 50,000, 75,000, 100,000, 125,000, 150,000, 175,000, and 200,000 cycles.

Fiber Evaluation

Each of the 10 randomly selected fibers were classified into one of four categories based on appearance (below).

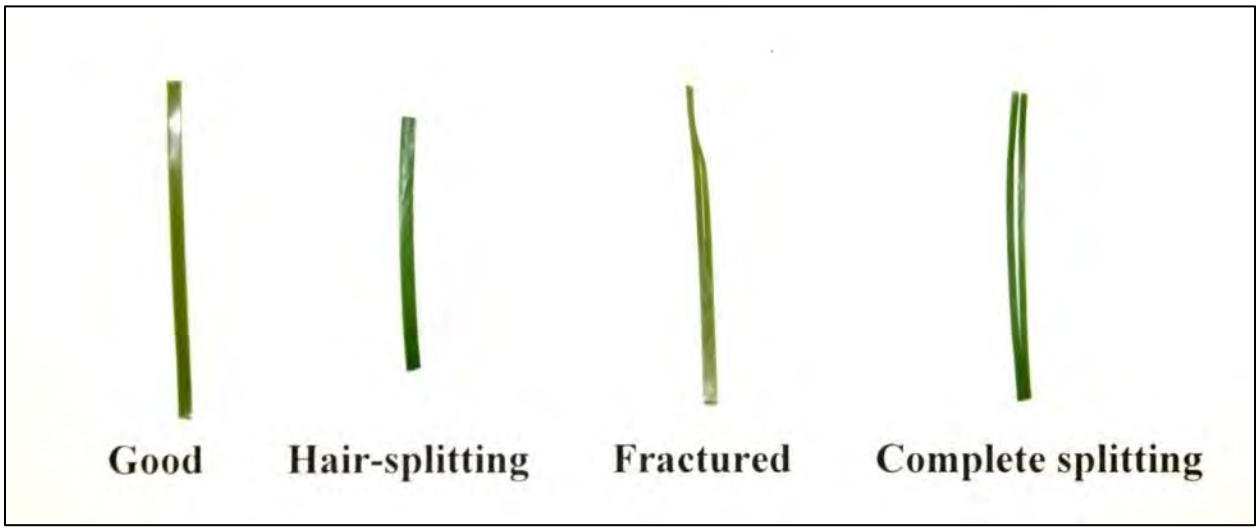

Fiber classifications for each cycle interval from 10 random fibers removed from sample.

# of Cycles	Good	Hair-Splitting*	Fractured	Complete Splitting
0 Cycles	10	0	0	0
10,000 Cycles	10	0	0	0
20,000 Cycles	10	0	0	0
30,000 Cycles	10	0	0	0
50,000 Cycles	9	1	0	0
75,000 Cycles	9	1	0	0
100,000 Cycles	8	2	0	0
125,000 Cycles	8	2	0	0
150,000 Cycles	9	1	0	0
175,000 Cycles	10	0	0	0
200,000 Cycles	9	1	0	0

*Fine hairsplitting on edges of fibers only

FieldTurf Core
0 Cycles

FieldTurf Core
10,000 Cycles

FieldTurf Core
20,000 Cycles

FieldTurf Core
30,000 Cycles

FieldTurf Core
50,000 Cycles

FieldTurf Core
75,000 Cycles

FieldTurf Core
100,000 Cycles

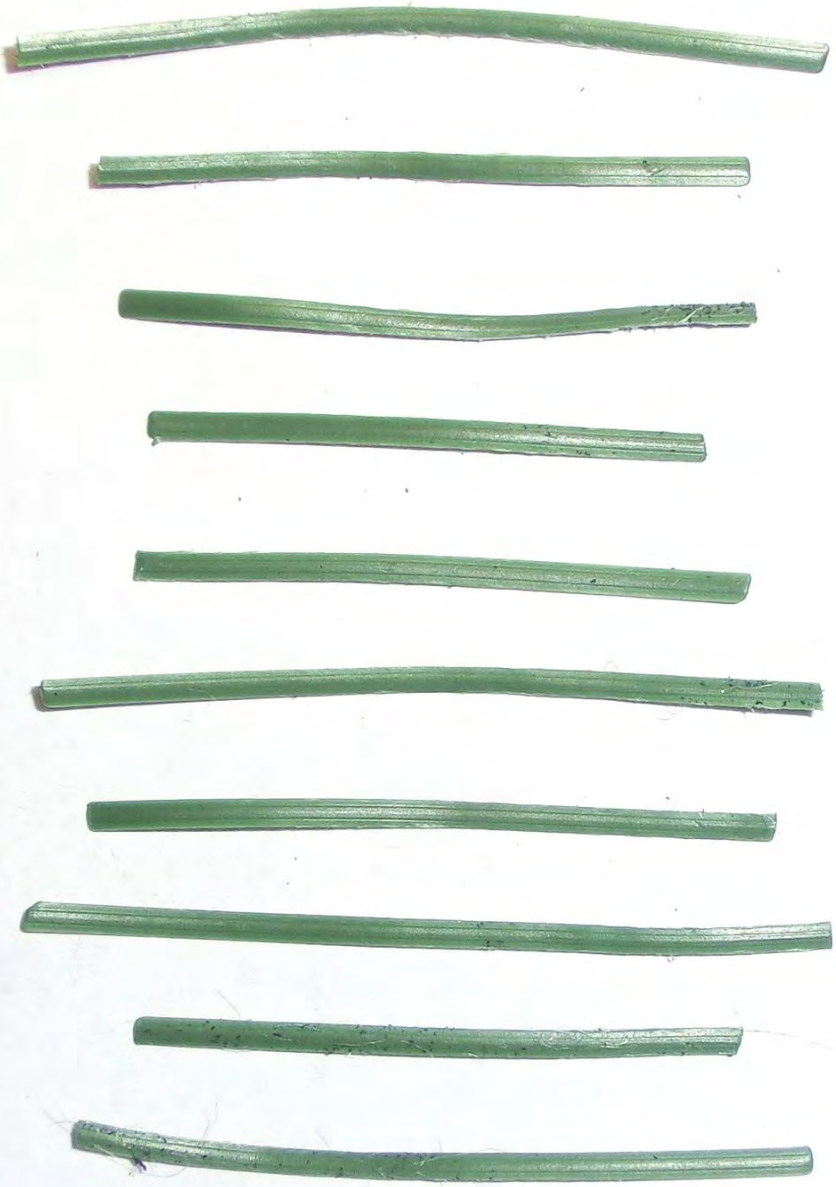

FieldTurf Core
125,000 Cycles

FieldTurf Core
150,000 Cycles

FieldTurf Core
175,000 Cycles

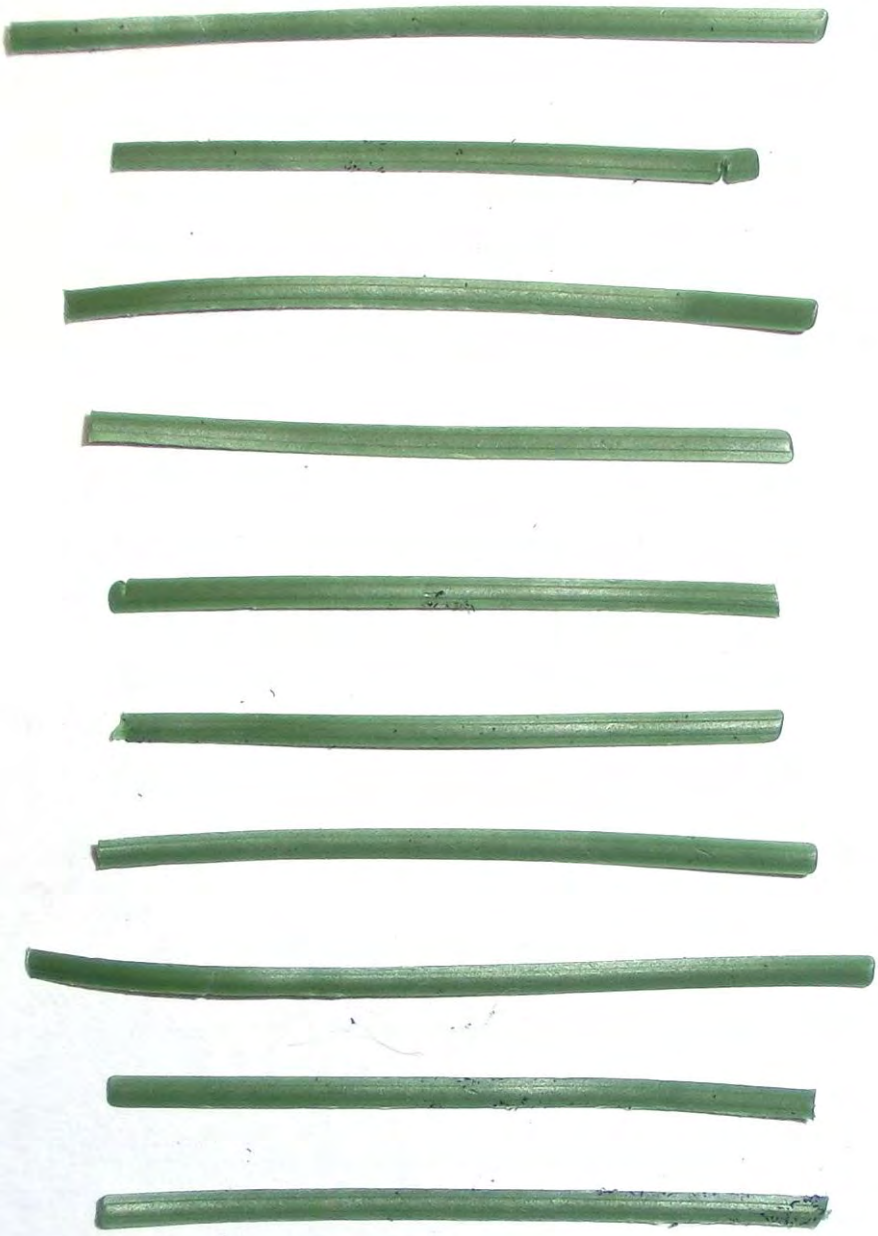

FieldTurf Core
200,000 Cycles

FieldTurf Core after 200,000 cycles

SPORTSFIELD SPECIALTIES
WWW.SPORTSFIELDSPECIALTIES.COM
Excellence from Design to Installation
41155 State Highway 10, PO Box 231, Delhi, NY 13753 CALL: 888-975-3343 FAX: 607-746-8481

Base Plate Mounted and/or Custom Size layouts Available

Standard Black Powder Coated Finish

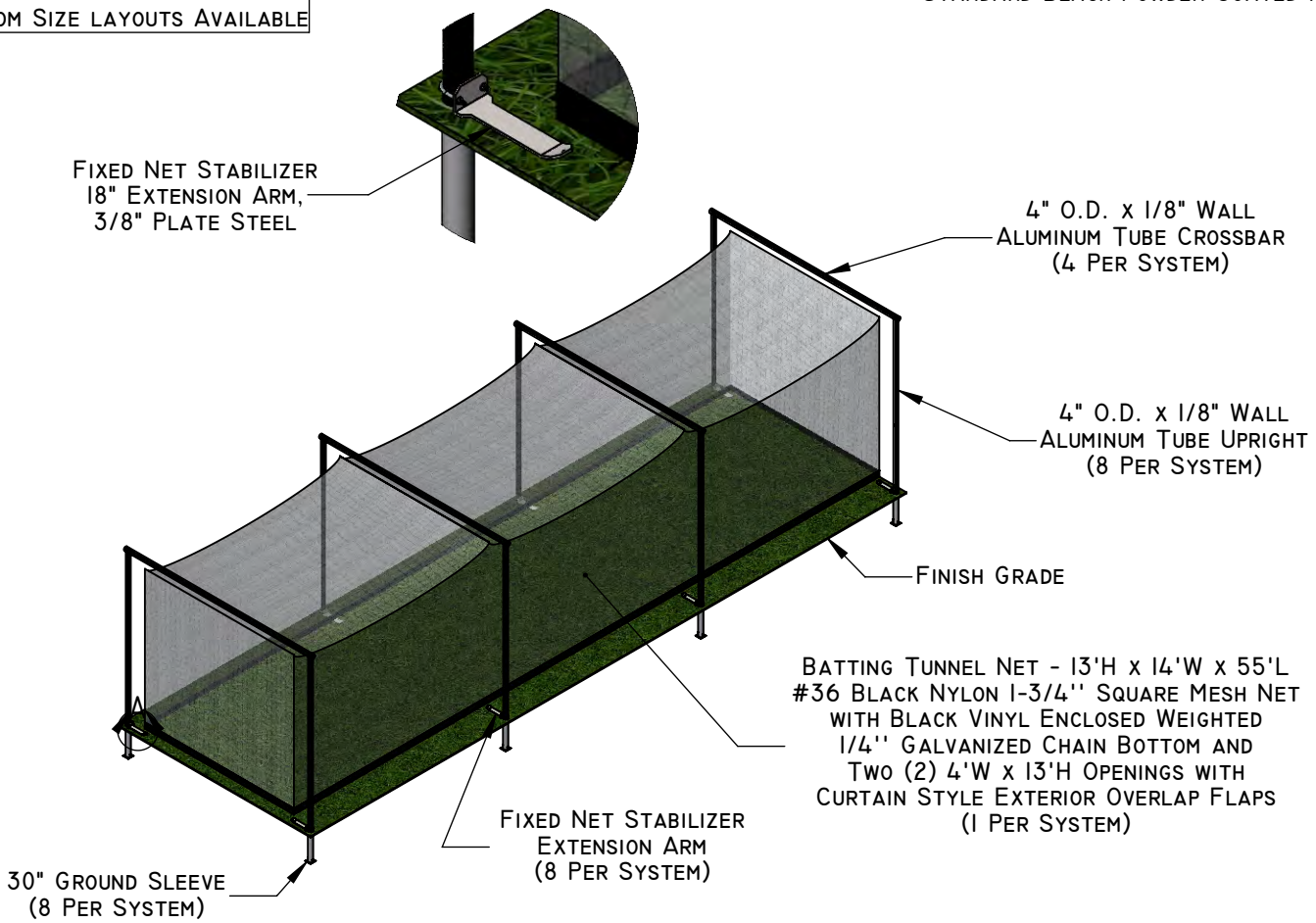

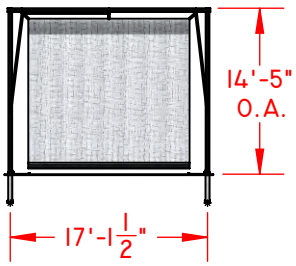

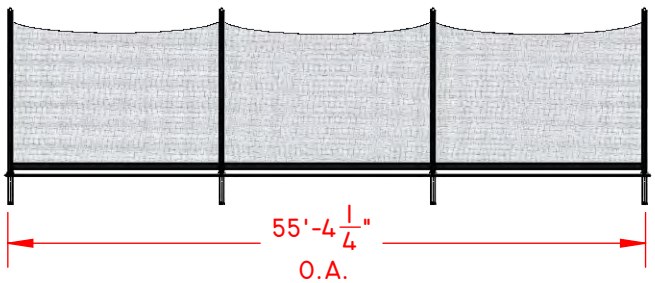

Foundation requirements vary based on local codes and soil conditions

Sportsfield Specialties, Inc. strongly recommends the removal of all nets prior to exposure to winter weather, including snow and/or ice storms. Whenever possible, the nets should also be lowered prior to any extreme wind events. Removal/Lowering of the nets will mitigate any unforeseen damage to the poles, nets and/or attachment hardware. Storing nets in a dry, pest free location will help extend the life of the nets. Sportsfield Specialties, Inc. will not be held liable or assume responsibility for any damage to the nets, poles and/or corresponding attachment hardware if the nets are not removed/lowered prior to the above described wind and/or weather events.

PROPRIETARY AND CONFIDENTIAL
THE INFORMATION CONTAINED IN THIS DRAWING IS THE SOLE PROPERTY OF SPORTSFIELD SPECIALTIES INC. ANY REPRODUCTION IN PART OR AS A WHOLE WITHOUT THE WRITTEN PERMISSION OF SPORTSFIELD SPECIALTIES INC. IS PROHIBITED.

BTOSS (LGOBT-SS-P) - Softball Single Overhead Batting Tunnel

Not To Scale

Sportsfield Specialties Inc 09242018

SPORTSFIELD SPECIALTIES
WWW.SPORTSFIELDSPECIALTIES.COM
Excellence from Design to Installation
41155 State Highway 10, PO Box 231, Delhi, NY 13753 CALL: 888-975-3343 FAX: 607-746-8481

Base Plate Mounted and/or Custom Size Layouts Available

Standard Black Powder Coated Finish

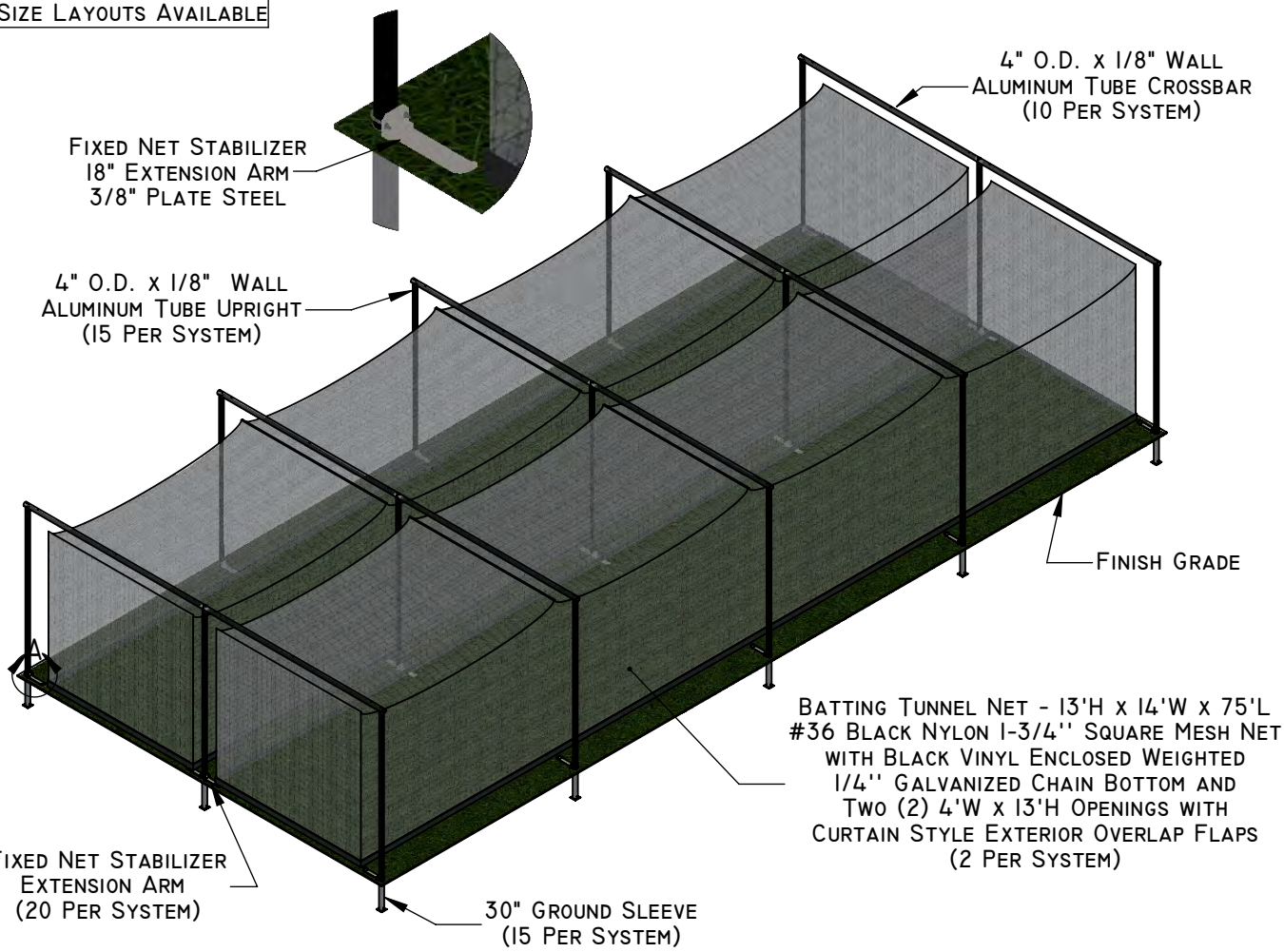

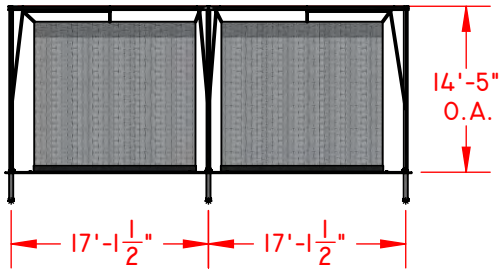

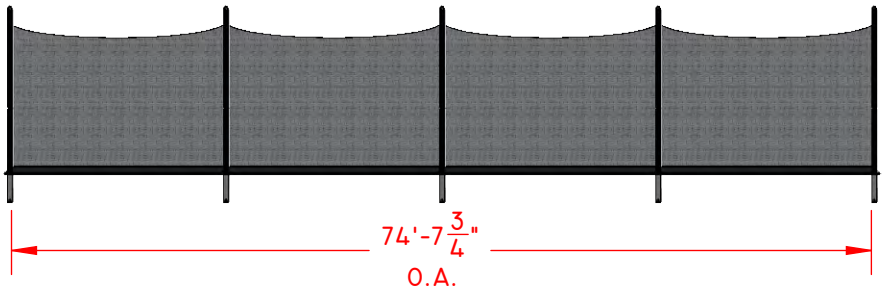

Foundation requirements vary based on local codes and soil conditions

Sportsfield Specialties, Inc. strongly recommends the removal of all nets prior to exposure to winter weather, including snow and/or ice storms. Whenever possible, the nets should also be lowered prior to any extreme wind events. Removal/Lowering of the nets will mitigate any unforeseen damage to the poles, nets and/or attachment hardware. Storing nets in a dry, pest free location will help extend the life of the nets. Sportsfield Specialties, Inc. will not be held liable or assume responsibility for any damage to the nets, poles and/or corresponding attachment hardware if the nets are not removed/lowered prior to the above described wind and/or weather events.

PROPRIETARY AND CONFIDENTIAL
THE INFORMATION CONTAINED IN THIS DRAWING IS THE SOLE PROPERTY OF SPORTSFIELD SPECIALTIES INC. ANY REPRODUCTION IN PART OR AS A WHOLE WITHOUT THE WRITTEN PERMISSION OF SPORTSFIELD SPECIALTIES INC. IS PROHIBITED.

BTOBD (LGOBT-BD-P) - Baseball Double Overhead Batting Tunnel

Not To Scale

Sportsfield Specialties Inc 09242018

DESIGNED TO MEET THE DEMANDS
OF MODERN SPORTS CONSTRUCTION

41155 St. Hwy 10
PO Box 231
Delhi, NY 13753
Toll Free: 888-975-3343
Fax: 607-746-8481

FieldTurf USA Inc

SPORTSFIELD SPECIALTIES
WWW.SPORTSFIELDSPECIALTIES.COM

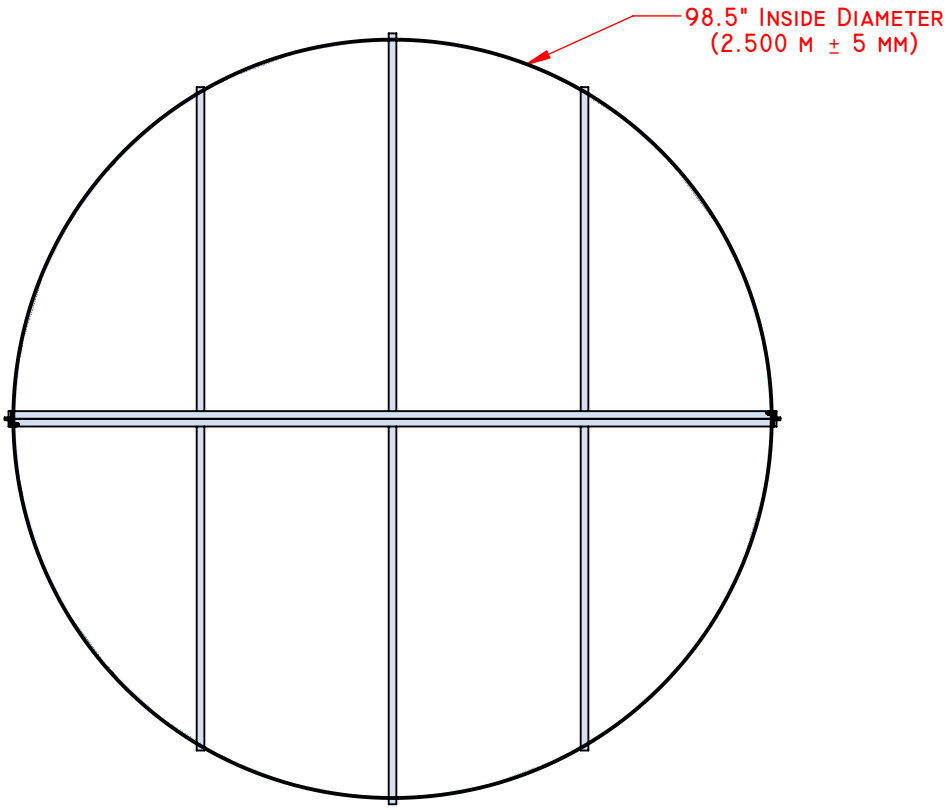

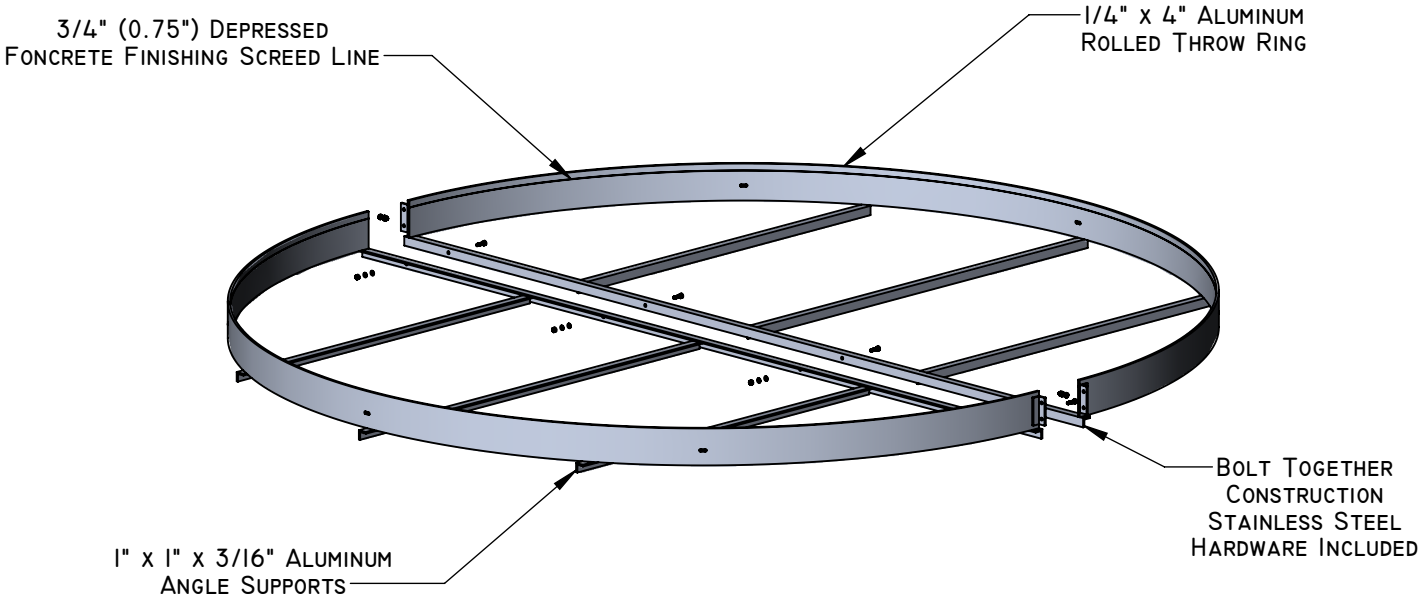

PROPRIETARY AND CONFIDENTIAL
THE INFORMATION CONTAINED IN THIS DRAWING IS THE SOLE PROPERTY OF SPORTSFIELD SPECIALTIES INC. ANY REPRODUCTION IN PART OR AS A WHOLE WITHOUT THE WRITTEN PERMISSION OF SPORTSFIELD SPECIALTIES INC. IS PROHIBITED.

TFDWRING
Discus Web Reinforced Throw Ring

Not To Scale

Sportsfield Specialties Inc 12112014

TFDWRING Webbed Discus Throw Ring

SECTION 11480 Athletic Equipment - Field

PART 1 GENERAL

1.01 WORK INCLUDED

A. Provide all equipment and materials, and do all work necessary to furnish and install the athletic equipment, as indicated on the drawings and as specified herein. Athletic equipment shall include, but not be limited to:

1. TFDWRING Webbed Discus Throw Ring

1.02 RELATED WORK

A. Examine contract documents for requirements that affect work of this section. Other specification sections that directly relate to the work of this section include, but are not limited to:

1. Section 02200 – Earthwork; Excavation and Backfill and establishment of sub-grade elevations.
2. Section 02511 – Asphalt, Concrete, and Pavement
3. Section 02535 – Synthetic Track Surfacing
4. Section 02542 – Synthetic Field Surfacing
5. Section 03300 – Cast-in-Place Concrete

1.03 REFERENCES

A. Comply with applicable requirements of the following standards. Where these standards conflict with other specified requirements, the most restrictive requirements shall govern.

1. National Federation of State High School Associations (NFHS)
2. National Collegiate Athletic Association (NCAA)
3. International Amateur Athletic Association (IAAF)
4. American Sports Builders Association (ASBA)
5. Manufacturers Data and Recommended Installation Requirements

1.04 SUBMITTALS

A. Manufacturers Product Data

1. Provide manufacturers product data prior to actual field installation work, for Architects or Owners representatives

review.

B. Shop Drawings

1. Provide drawings of the manufacturers recommended installation and foundation requirements prior to actual field installation work, for Architects or Owners representatives review.

1.05 QUALITY ASSURANCE

A. Manufacturers warranties shall pass to the Owner and certification made that the product materials meet all applicable grade trademarks or conform to industry standards and inspection requirements.

1.06 PRODUCT DELIVERY AND STORAGE

A. Materials delivered to the site shall be examined for damage or defects in shipping. Any defects shall be noted and reported to the Owners representative. Replacements, if necessary, shall be immediately re-ordered, so as to minimize any conflict with the construction schedule. Sound materials shall be stored above ground under protective cover or indoors so as to provide proper protection.

PART 2 PRODUCTS

2.01 Webbed Discus Throw Ring

A. BASE: TFDWRING Webbed Discus Throw Ring as manufactured by:

Sportsfield Specialties Inc.
P.O. Box 231
41155 State Highway 10
Delhi, NY 13753
p. 888-975-3343
f. 607-746-8481

B. COMPONENTS:

1. TFDWRING fabricated with 2.0in x 2.0in x .25in Aluminum Angle, 98.4in Diameter, having the following attributes:
   A. Aluminum Web Reinforcement

PART 3 EXECUTION

3.01 INSTALLATION OF EQUIPMENT

A. All athletic equipment shall be installed as recommended with manufacturer's written directions, and as indicated on the drawings.

END OF SECTION

DESIGNED TO MEET THE DEMANDS
OF MODERN SPORTS CONSTRUCTION

41155 ST. HWY 10
PO BOX 231
DELHI, NY 13753
TOLL FREE: 888-975-3343
FAX: 607-746-8481

FieldTurf USA Inc

SPORTSFIELD SPECIALTIES
WWW.SPORTSFIELDSPECIALTIES.COM

MEETS AND/OR EXCEEDS CURRENT IAAF SPECIFICATIONS, RULES AND REQUIREMENTS

STANDARD BLACK POWDER COATED FINISH

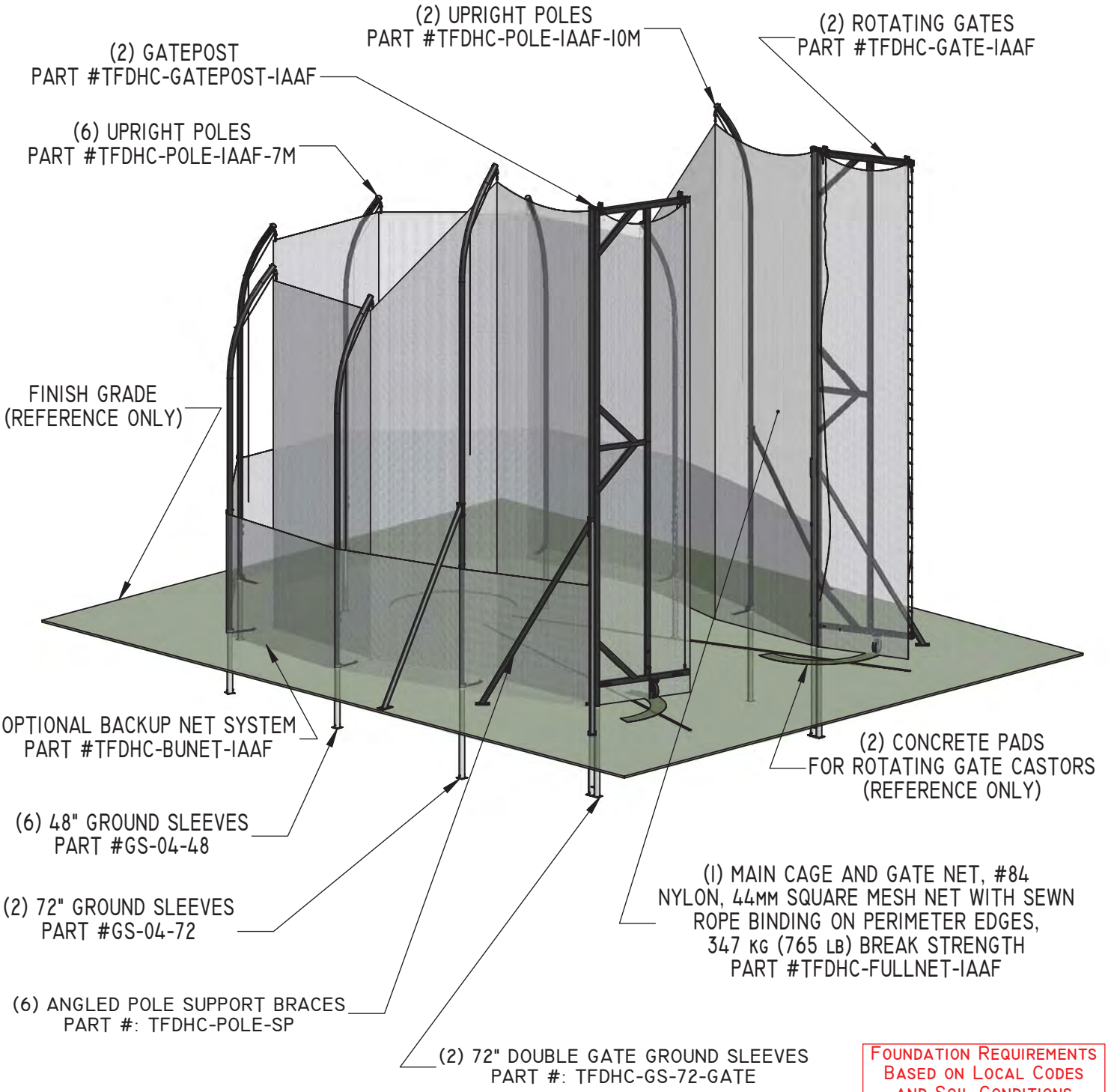

FOUNDATION REQUIREMENTS BASED ON LOCAL CODES AND SOIL CONDITIONS

PROPRIETARY AND CONFIDENTIAL
THE INFORMATION CONTAINED IN THIS DRAWING IS THE SOLE PROPERTY OF SPORTSFIELD SPECIALTIES INC. ANY REPRODUCTION IN PART OR AS A WHOLE WITHOUT THE WRITTEN PERMISSION OF SPORTSFIELD SPECIALTIES INC. IS PROHIBITED.

TFDHCIAAF - IAAF HAMMER/DISCUS CAGE
SINGLE PAD ELEVATION VIEW
WITH OPTIONAL BACKUP NET SYSTEM

NOT TO SCALE

SPORTSFIELD SPECIALTIES INC 11042014

DESIGNED TO MEET THE DEMANDS
OF MODERN SPORTS CONSTRUCTION

FieldTurf USA Inc

SPORTSFIELD SPECIALTIES
WWW.SPORTSFIELDSPECIALTIES.COM

41155 ST. HWY 10
PO BOX 231
DELHI, NY 13753
TOLL FREE: 888-975-3343
FAX: 607-746-8481

MEETS AND/OR EXCEEDS CURRENT IAAF SPECIFICATIONS, RULES AND REQUIREMENTS

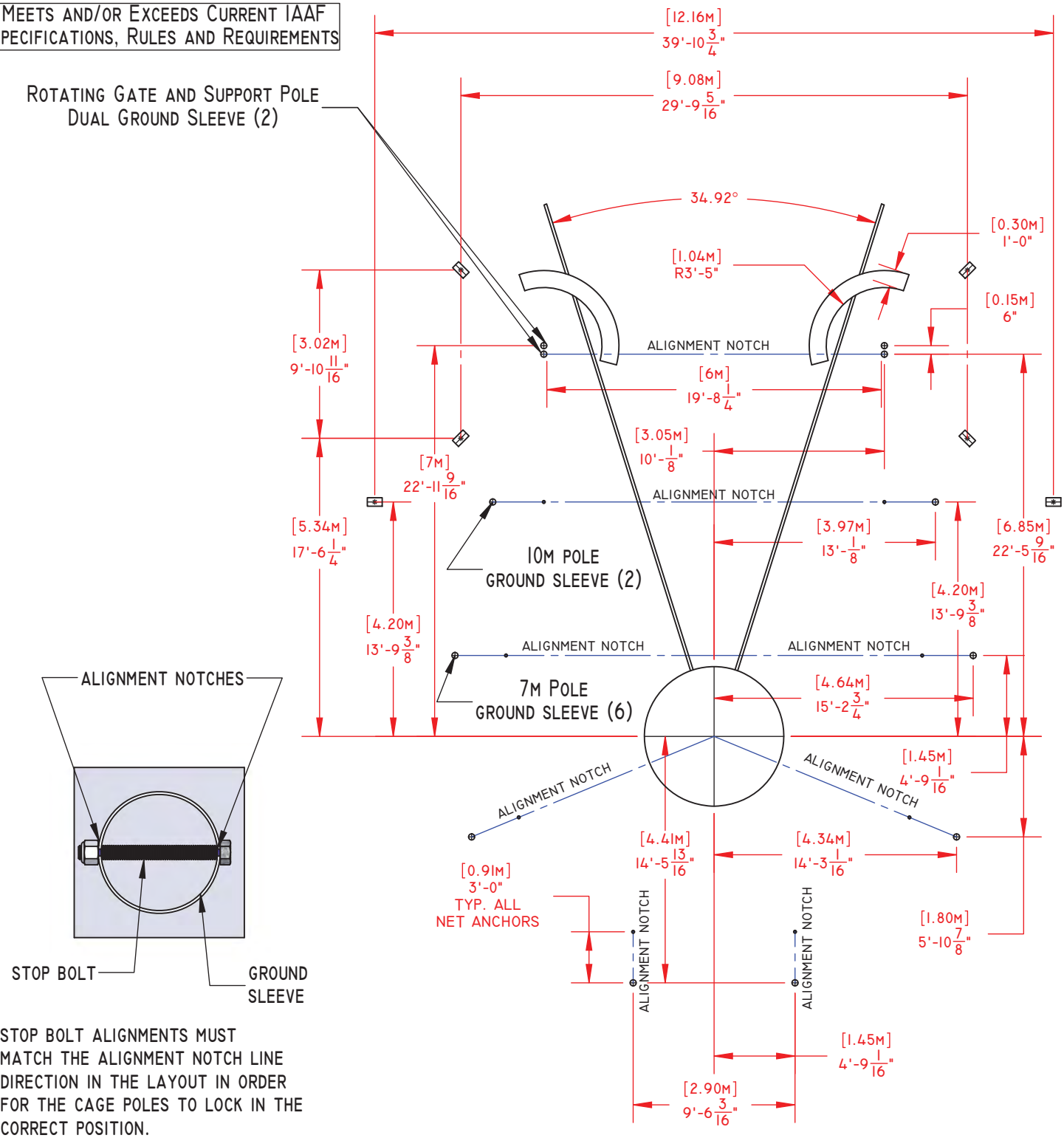

STOP BOLT ALIGNMENTS MUST MATCH THE ALIGNMENT NOTCH LINE DIRECTION IN THE LAYOUT IN ORDER FOR THE CAGE POLES TO LOCK IN THE CORRECT POSITION.

PROPRIETARY AND CONFIDENTIAL
THE INFORMATION CONTAINED IN THIS DRAWING IS THE SOLE PROPERTY OF SPORTSFIELD SPECIALTIES INC. ANY REPRODUCTION IN PART OR AS A WHOLE WITHOUT THE WRITTEN PERMISSION OF SPORTSFIELD SPECIALTIES INC. IS PROHIBITED.

IAAF HAMMER/DISCUS CAGE, SINGLE PAD GROUND SLEEVE LAYOUT

NOT TO SCALE

SPORTSFIELD SPECIALTIES INC 11202014

DESIGNED TO MEET THE DEMANDS
OF MODERN SPORTS CONSTRUCTION

41155 ST. HWY 10
PO BOX 231
DELHI, NY 13753
TOLL FREE: 888-975-3343
FAX: 607-746-8481

SPORTSFIELD SPECIALTIES
WWW.SPORTSFIELDSPECIALTIES.COM

FieldTurf USA Inc

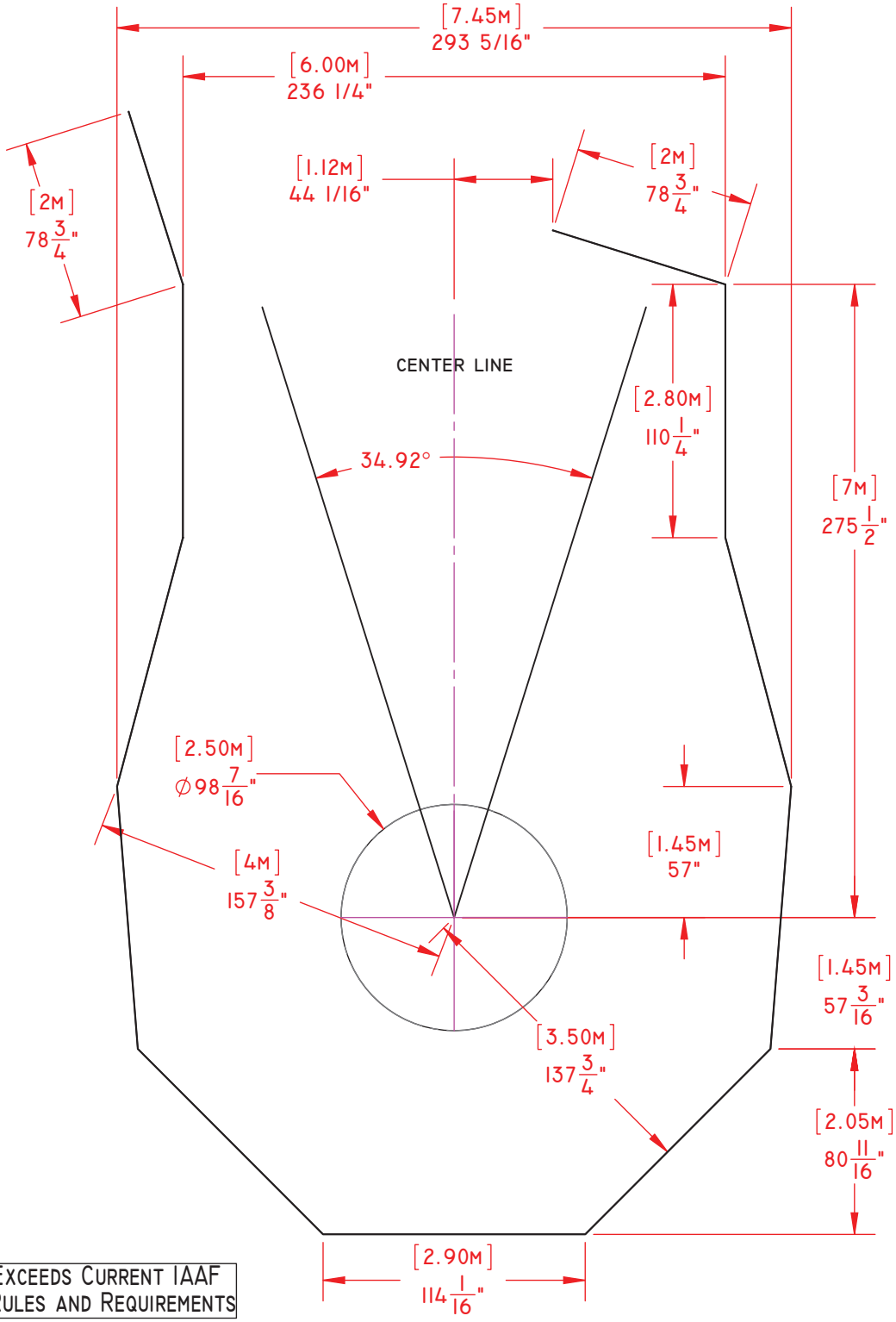

MEETS AND/OR EXCEEDS CURRENT IAAF SPECIFICATIONS, RULES AND REQUIREMENTS

PROPRIETARY AND CONFIDENTIAL
THE INFORMATION CONTAINED IN THIS DRAWING IS THE SOLE PROPERTY OF SPORTSFIELD SPECIALTIES INC. ANY REPRODUCTION IN PART OR AS A WHOLE WITHOUT THE WRITTEN PERMISSION OF SPORTSFIELD SPECIALTIES INC. IS PROHIBITED.

TFDHCIAAF - IAAF HAMMER/DISCUS CAGE SINGLE PAD LAYOUT

NOT TO SCALE

SPORTSFIELD SPECIALTIES INC 11142014

DESIGNED TO MEET THE DEMANDS
OF MODERN SPORTS CONSTRUCTION

41155 ST. HWY 10
PO BOX 231
DELHI, NY 13753
TOLL FREE: 888-975-3343
FAX: 607-746-8481

FieldTurf USA Inc

SPORTSFIELD SPECIALTIES
WWW.SPORTSFIELDSPECIALTIES.COM

UNITED STATES PATENT #7,641,593, ISSUED JANUARY 5, 2010
UNITED STATES PATENT #8,186,125, ISSUED MAY 29, 2012
UNITED STATES PATENT #8,745,955, ISSUED JUNE 10, 2014

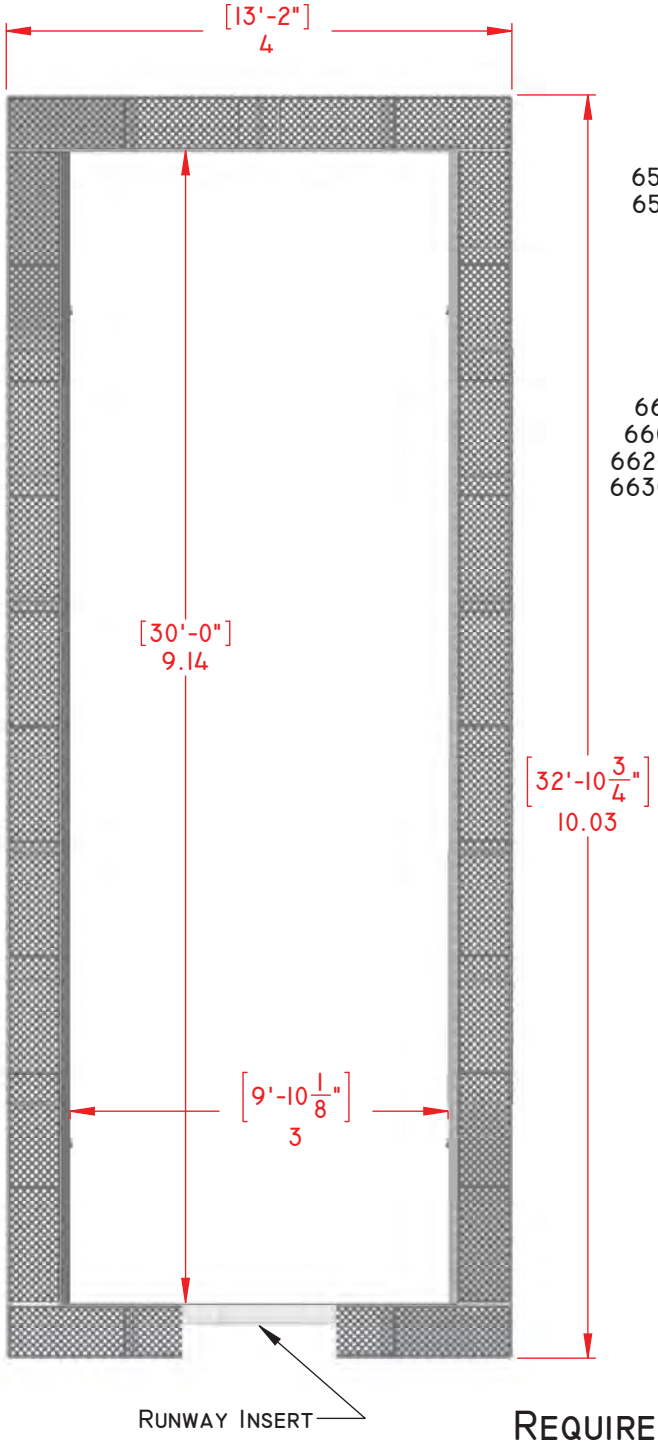

BASE FORMS WITH CROSS SUPPORT STRUCTURE AND SAND CATCHERS CONSTRUCTED OF 1/8" ALUMINUM

6430 ALUMINUM METAL GRATE MAT SUPPORTS

6423 RUBBER MATS WITH 1-1/4" ROUND PERFORATIONS

BASE FORM ASSEMBLY
6525 L.H. CORNER BASE FORM W/DRAIN (2)
6535 R.H. CORNER BASE FORM W/DRAIN (2)
6502 2 METER BASE FORM (8)

SAND CATCHER ASSEMBLY
6601 SAND CATCHER W/ RUNWAY INSERT (1)
6603 SAND CATCHER W/O RUNWAY INSERT (1)
6620 L.H. CORNER SAND CATCHER W/DRAIN (2)
6630 R.H. CORNER SAND CATCHER W/DRAIN (2)
6602 2 METER SAND CATCHER (6)

6430 METAL GRATE MAT SUPPORTS
36" LONG (26)
18" LONG (2)
12" LONG (1)

6423 RUBBER MATS
36" LONG (26)
18" LONG (2)
12" LONG (1)

SP6010-HD
HARDWARE KIT INCLUDES
ALL STAINLESS STEEL
ASSEMBLY HARDWARE
6525-DRAIN

MEETS NCAA
REQUIREMENTS AND SPECIFICATIONS

PROPRIETARY AND CONFIDENTIAL
THE INFORMATION CONTAINED IN THIS DRAWING IS THE SOLE PROPERTY OF SPORTSFIELD SPECIALTIES INC. ANY REPRODUCTION IN PART OR AS A WHOLE WITHOUT THE WRITTEN PERMISSION OF SPORTSFIELD SPECIALTIES INC. IS PROHIBITED.

SP6010 JUMPFORM®
COLLEGE 3M X 9M SAND PIT WITH SAND CATCHERS

NOT TO SCALE

SPORTSFIELD SPECIALTIES INC 11012014

DESIGNED TO MEET THE DEMANDS
OF MODERN SPORTS CONSTRUCTION

41155 ST. HWY 10
PO BOX 231
DELHI, NY 13753
TOLL FREE: 888-975-3343
FAX: 607-746-8481

FieldTurf USA Inc

SPORTSFIELD SPECIALTIES
WWW.SPORTSFIELDSPECIALTIES.COM

UNITED STATES PATENT #7,641,593, ISSUED JANUARY 5, 2010
UNITED STATES PATENT #8,186,125, ISSUED MAY 29, 2012
UNITED STATES PATENT #8,745,955, ISSUED JUNE 10, 2014

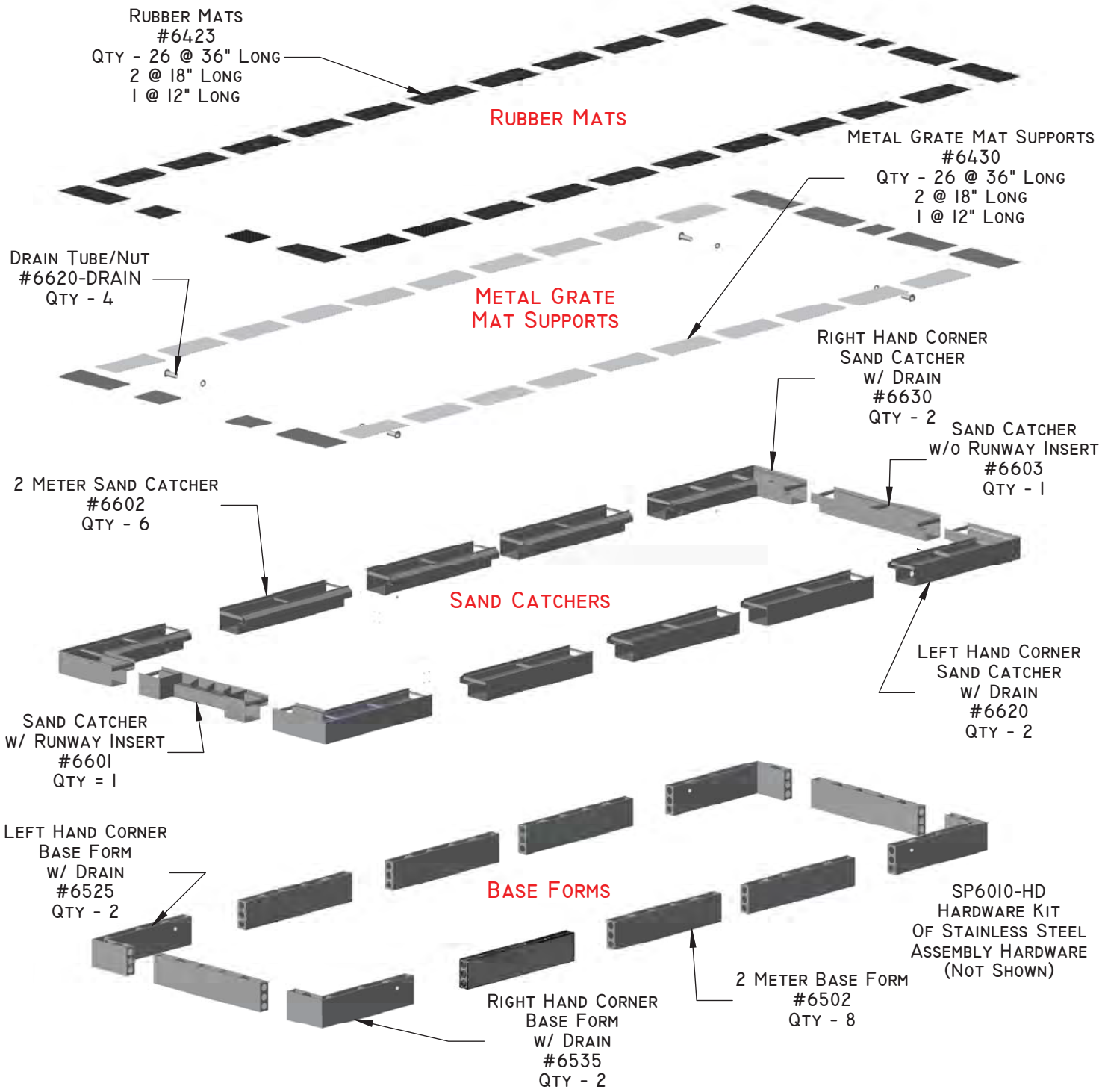

PROPRIETARY AND CONFIDENTIAL
THE INFORMATION CONTAINED IN THIS DRAWING IS THE SOLE PROPERTY OF SPORTSFIELD SPECIALTIES INC. ANY REPRODUCTION IN PART OR AS A WHOLE WITHOUT THE WRITTEN PERMISSION OF SPORTSFIELD SPECIALTIES INC. IS PROHIBITED.

SP6010 JUMPFORM® EXPLODED VIEW
COLLEGE 3M X 9M SAND PIT WITH SAND CATCHERS

NOT TO SCALE

SPORTSFIELD SPECIALTIES INC 11012014

DESIGNED TO MEET THE DEMANDS
OF MODERN SPORTS CONSTRUCTION

41155 ST. HWY 10
PO BOX 231
DELHI, NY 13753
TOLL FREE: 888-975-3343
FAX: 607-746-8481

FieldTurf USA Inc

SPORTSFIELD SPECIALTIES
WWW.SPORTSFIELDSPECIALTIES.COM

6800 College Sand Pit Cover Set (12-6801 Covers)

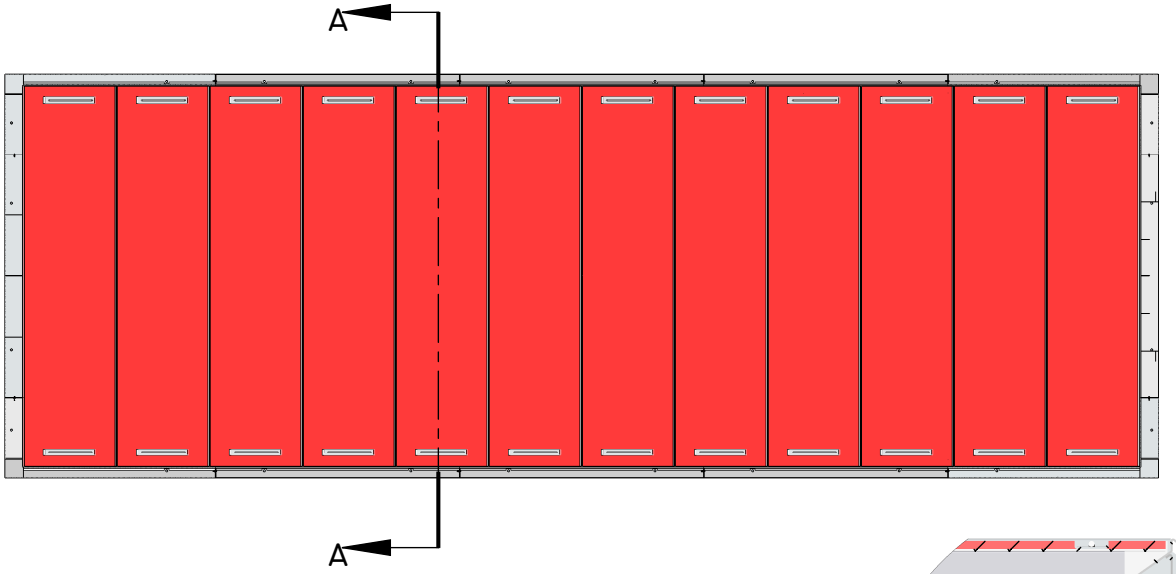

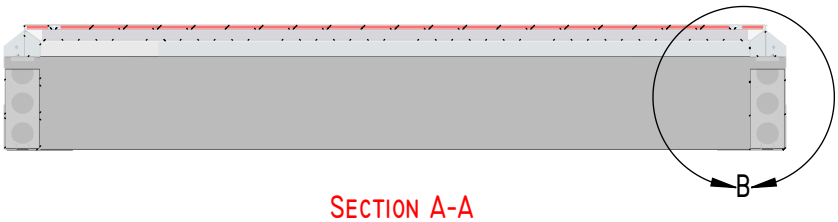

Section A-A

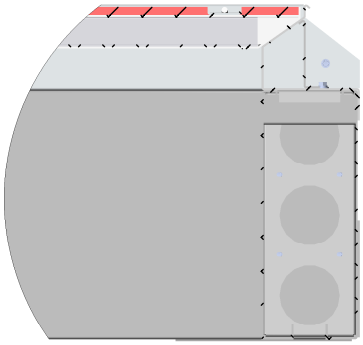

Detail B

6801 Individual Cover

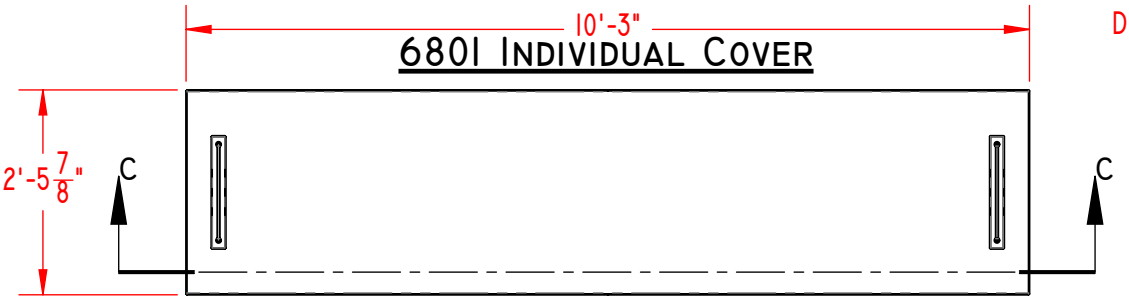

Product Weights
6800 - 960Lbs/Set
6801 - 80Lbs Each
*Weights Prior To Surfacing

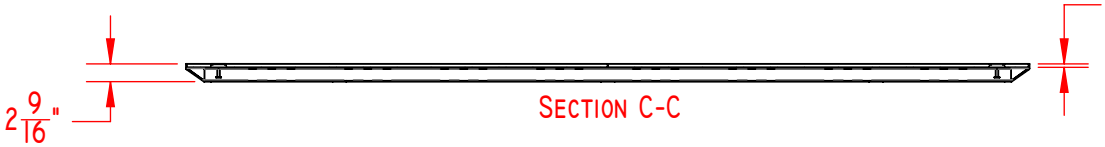

Section C-C

1/2" Recess to Accept Synthetic Track Surface by Others

PROPRIETARY AND CONFIDENTIAL
THE INFORMATION CONTAINED IN THIS DRAWING IS THE SOLE PROPERTY OF SPORTSFIELD SPECIALTIES INC. ANY REPRODUCTION IN PART OR AS A WHOLE WITHOUT THE WRITTEN PERMISSION OF SPORTSFIELD SPECIALTIES INC. IS PROHIBITED.

SP6800 College Sand Pit Cover Set

Not To Scale

Sportsfield Specialties Inc 11012014

DESIGNED TO MEET THE DEMANDS
OF MODERN SPORTS CONSTRUCTION

41155 ST. HWY 10
PO BOX 231
DELHI, NY 13753
TOLL FREE: 888-975-3343
FAX: 607-746-8481

FieldTurf USA Inc

SPORTSFIELD SPECIALTIES
WWW.SPORTSFIELDSPECIALTIES.COM

STANDARD POWDER COATED WHITE FINISH
YELLOW & ORANGE AVAILABLE

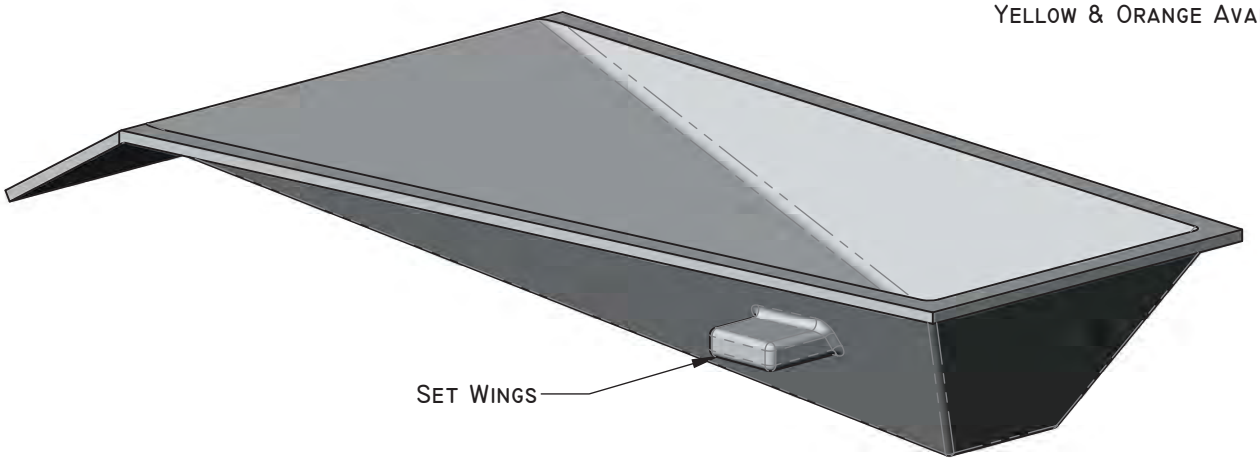

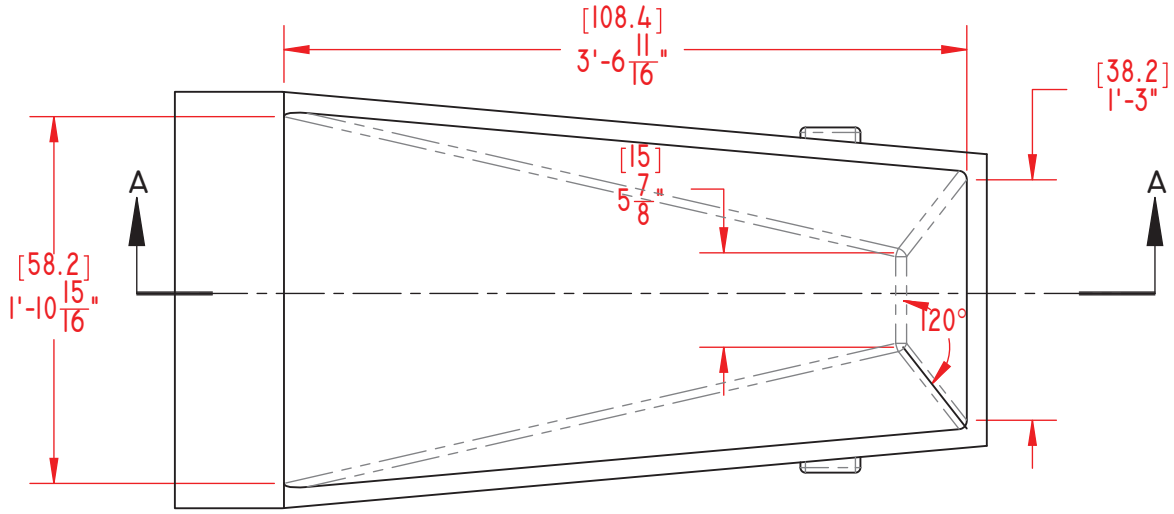

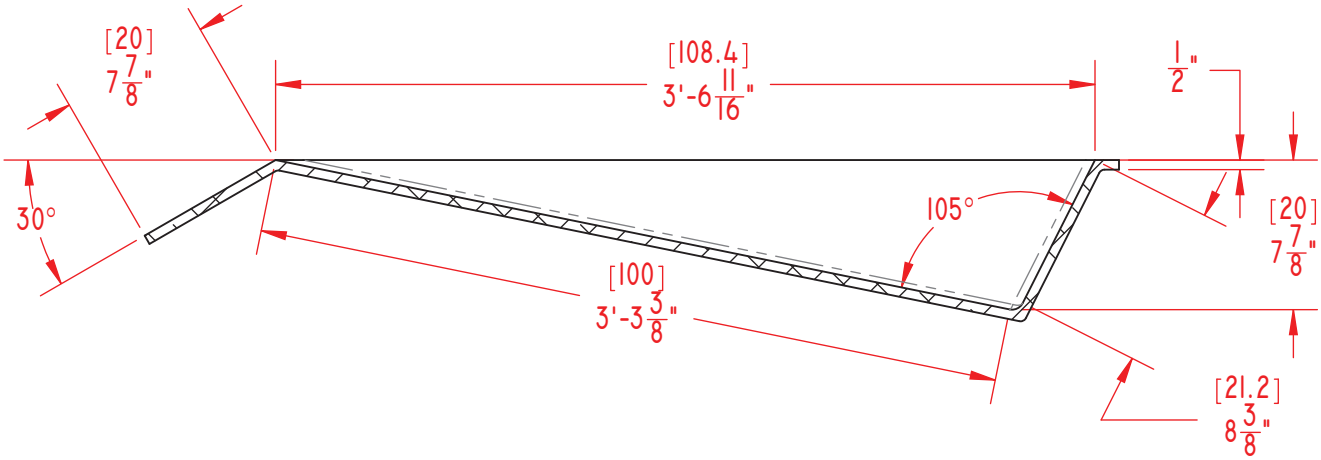

MEETS AND/OR EXCEEDS ALL IAAF, NCAA AND NFHS SPECIFICATIONS

PROPRIETARY AND CONFIDENTIAL
THE INFORMATION CONTAINED IN THIS DRAWING IS THE SOLE PROPERTY OF SPORTSFIELD SPECIALTIES INC. ANY REPRODUCTION IN PART OR AS A WHOLE WITHOUT THE WRITTEN PERMISSION OF SPORTSFIELD SPECIALTIES INC. IS PROHIBITED.

TFPV001CA - CAST ALUMINUM VAULT BOX

NOT TO SCALE

SPORTSFIELD SPECIALTIES INC 11012014

TFPV001CA Cast Aluminum Pole Vault Box with TFPV003ALTR-CA Cover Plug

SECTION 11480 Athletic Equipment - Track & Field

PART 1 GENERAL

1.01 WORK INCLUDED

A. Provide all equipment and materials, and do all work necessary to furnish and install the athletic equipment, as indicated on the drawings and as specified herein. Athletic equipment shall include, but not be limited to:

1. TFPV001CA Vault Box with TFPV003ALTR-CA Cover Plug

1.02 RELATED WORK

A. Examine contract documents for requirements that affect work of this section. Other specification sections that directly relate to the work of this section include, but are not limited to:

1. Section 02200 – Earthwork; Excavation and Backfill and establishment of sub-grade elevations.
2. Section 02511 – Asphalt, Concrete, and Pavement
3. Section 02535 – Synthetic Track Surfacing
4. Section 02542 – Synthetic Field Surfacing
5. Section 03300 – Cast-in-Place Concrete

1.03 REFERENCES

A. Comply with applicable requirements of the following standards. Where these standards conflict with other specified requirements, the most restrictive requirements shall govern.

1. National Federation of State High School Associations (NFHS)
2. National Collegiate Athletic Association (NCAA)
3. International Amateur Athletic Association (IAAF)
4. American Sports Builders Association (ASBA)
5. Manufacturers Data and Recommended Installation Requirements

1.04 SUBMITTALS

A. Manufacturers Product Data

1. Provide manufacturers product data prior to actual field installation work, for Architects or Owners representatives

review.

B. Shop Drawings

1. Provide drawings of the manufacturers recommended installation and foundation requirements prior to actual field installation work, for Architects or Owners representatives review.

1.05 QUALITY ASSURANCE

A. Manufacturers warranties shall pass to the Owner and certification made that the product materials meet all applicable grade trademarks or conform to industry standards and inspection requirements.

1.06 PRODUCT DELIVERY AND STORAGE

A. Materials delivered to the site shall be examined for damage or defects in shipping. Any defects shall be noted and reported to the Owners representative. Replacements, if necessary, shall be immediately re-ordered, so as to minimize any conflict with the construction schedule. Sound materials shall be stored above ground under protective cover or indoors so as to provide proper protection.

PART 2 PRODUCTS

2.01 Cast Aluminum Pole Vault Box with Cover Plug

BASE: TFPV001CA Pole Vault Box with TFPV003ALTR-CA Cover Plug as manufactured by:

Sportsfield Specialties Inc.
P.O. Box 231
41155 State Highway 10
Delhi, NY 13753
p. 888-975-3343
f. 607-746-8481

B. COMPONENTS:

1. TFPV001CA Pole Vault Box fabricated with ½" Cast Aluminum having the following attributes:
   A. Regulation Size
   B. Cast Aluminum Setting Wings for Concrete Encasement
   C. Powder Coating White (Yellow & Orange Available)

2. TFPV003ALTR-CA Cover Plug fabricated with 1/8” Aluminum having the following attributes:
    A. Sized to Fill Void of Vault Box
    B. Top Surface Recessed ½” to Accept Synthetic Track Material

PART 3 EXECUTION

3.01 INSTALLATION OF EQUIPMENT

A. All athletic equipment shall be installed as recommended with manufacturer's written directions, and as indicated on the drawings.

END OF SECTION

DESIGNED TO MEET THE DEMANDS
OF MODERN SPORTS CONSTRUCTION

41155 ST. HWY 10
PO BOX 231
DELHI, NY 13753
TOLL FREE: 888-975-3343
FAX: 607-746-8481

FieldTurf USA Inc

SPORTSFIELD SPECIALTIES
WWW.SPORTSFIELDSPECIALTIES.COM

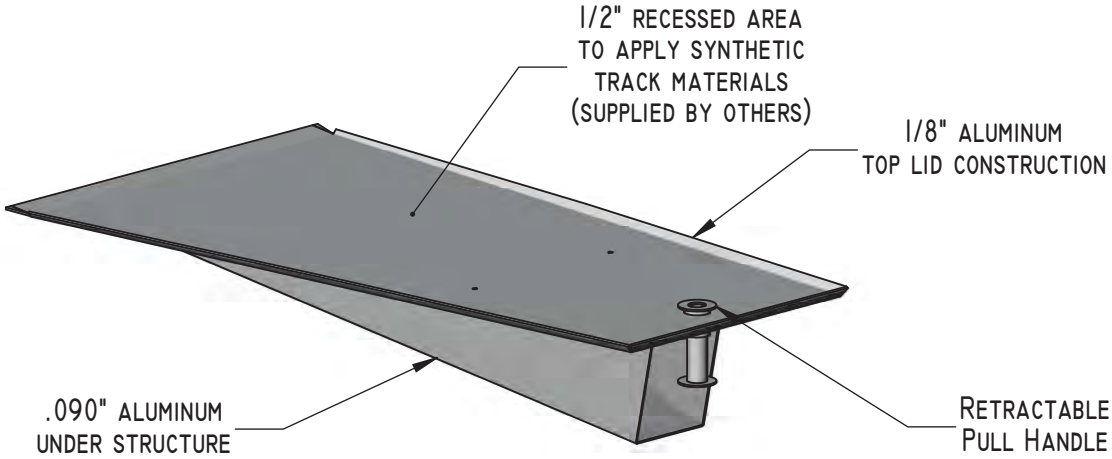

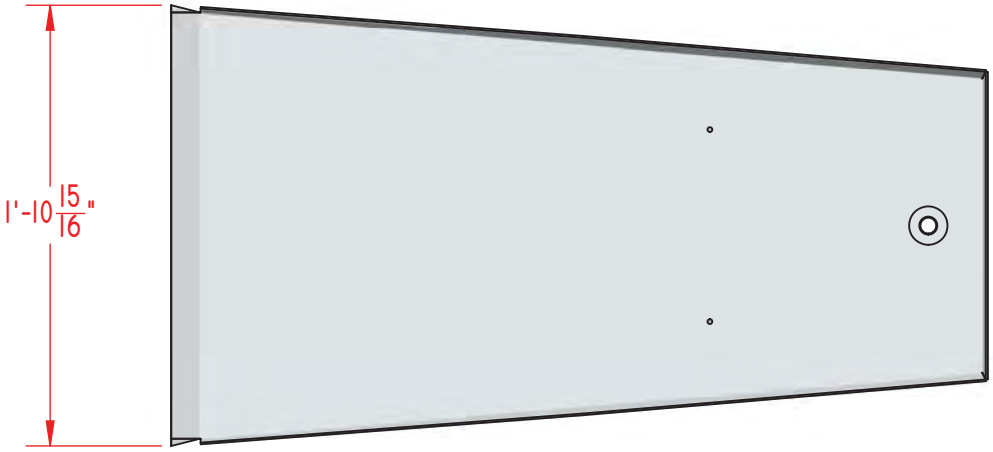

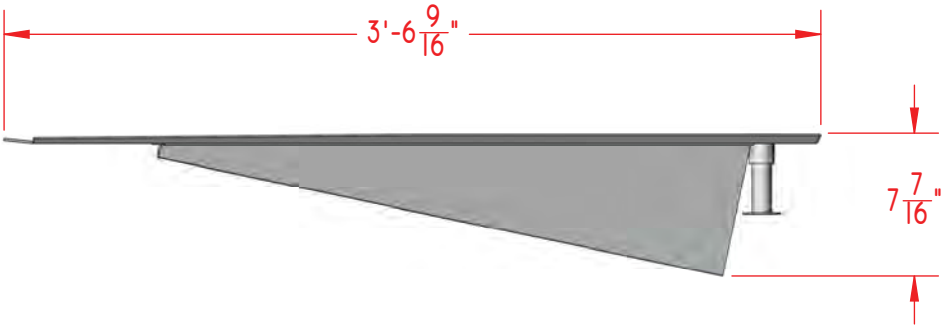

PROPRIETARY AND CONFIDENTIAL
THE INFORMATION CONTAINED IN THIS DRAWING IS THE SOLE PROPERTY OF SPORTSFIELD SPECIALTIES INC. ANY REPRODUCTION IN PART OR AS A WHOLE WITHOUT THE WRITTEN PERMISSION OF SPORTSFIELD SPECIALTIES INC. IS PROHIBITED.

TFPV003ALTR-CA - Cast Aluminum Vault Box Cover Plug

Not To Scale

Sportsfield Specialties Inc 11012014

TFPV003ALTR-CA - Vault Box Cover Plug

SECTION 11480 Athletic Equipment - Track & Field

PART 1 GENERAL

1.01 WORK INCLUDED

A. Provide all equipment and materials, and do all work necessary to furnish and install the athletic equipment, as indicated on the drawings and as specified herein. Athletic equipment shall include, but not be limited to:

1. TFPV003ALTR-CA - Vault Box Cover Plug

1.02 RELATED WORK

A. Examine contract documents for requirements that affect work of this section. Other specification sections that directly relate to the work of this section include, but are not limited to:

1. Section 02200 – Earthwork; Excavation and Backfill and establishment of sub-grade elevations.
2. Section 02511 – Asphalt, Concrete, and Pavement
3. Section 02535 – Synthetic Track Surfacing
4. Section 02542 – Synthetic Field Surfacing
5. Section 03300 – Cast-in-Place Concrete

1.03 REFERENCES

A. Comply with applicable requirements of the following standards. Where these standards conflict with other specified requirements, the most restrictive requirements shall govern.

1. National Federation of State High School Associations (NFHS)
2. National Collegiate Athletic Association (NCAA)
3. International Amateur Athletic Association (IAAF)
4. American Sports Builders Association (ASBA)
5. Manufacturers Data and Recommended Installation Requirements

1.04 SUBMITTALS

A. Manufacturers Product Data

1. Provide manufacturers product data prior to actual field installation work, for Architects or Owners representatives

review.

B. Shop Drawings

1. Provide drawings of the manufacturers recommended installation and foundation requirements prior to actual field installation work, for Architects or Owners representatives review.

1.05 QUALITY ASSURANCE

A. Manufacturers warranties shall pass to the Owner and certification made that the product materials meet all applicable grade trademarks or conform to industry standards and inspection requirements.

1.06 PRODUCT DELIVERY AND STORAGE

A. Materials delivered to the site shall be examined for damage or defects in shipping. Any defects shall be noted and reported to the Owners representative. Replacements, if necessary, shall be immediately re-ordered, so as to minimize any conflict with the construction schedule. Sound materials shall be stored above ground under protective cover or indoors so as to provide proper protection.

PART 2 PRODUCTS

2.01 Aluminum Vault Box Cover Plug

A. BASE: TFPV003ALTR-CA - Vault Box Cover Plug as manufactured by:

Sportsfield Specialties Inc.
P.O. Box 231
41155 State Highway 10
Delhi, NY 13753
p. 888-975-3343
f. 607-746-8481

B. COMPONENTS:

1. TFPV003ALTR-CA Cover Plug fabricated with 0.90in Aluminum understructure and .125in Aluminum top lid having the following attributes:
   A. Sized to Fill Void of Standard Cast Aluminum Vault Box
   B. Top Surface Recessed 0.50in to Accept Synthetic Track Material

PART 3 EXECUTION

3.01 INSTALLATION OF EQUIPMENT

A. All athletic equipment shall be installed as recommended with manufacturer's written directions, and as indicated on the drawings.

END OF SECTION

TFSPT001AL Shot Put Toe Board (Depressed Pad)

SECTION 11480 Athletic Equipment - Track & Field

PART 1 GENERAL

1.01 WORK INCLUDED

A. Provide all equipment and materials, and do all work necessary to furnish and install the athletic equipment, as indicated on the drawings and as specified herein. Athletic equipment shall include, but not be limited to:

1. TFSPT001AL Shot Put Toe Board (Depressed Pad)

1.02 RELATED WORK

A. Examine contract documents for requirements that affect work of this section. Other specification sections that directly relate to the work of this section include, but are not limited to:

1. Section 02200 – Earthwork; Excavation and Backfill and establishment of sub-grade elevations.
2. Section 02511 – Asphalt, Concrete, and Pavement
3. Section 02535 – Synthetic Track Surfacing
4. Section 02542 – Synthetic Field Surfacing
5. Section 03300 – Cast-in-Place Concrete

1.03 REFERENCES

A. Comply with applicable requirements of the following standards. Where these standards conflict with other specified requirements, the most restrictive requirements shall govern.

1. National Federation of State High School Associations (NFHS)
2. National Collegiate Athletic Association (NCAA)
3. International Amateur Athletic Association (IAAF)
4. American Sports Builders Association (ASBA)
5. Manufacturers Data and Recommended Installation Requirements

1.04 SUBMITTALS

A. Manufacturers Product Data

1. Provide manufacturers product data prior to actual field installation work, for Architects or Owners representatives

review.

B. Shop Drawings

1. Provide drawings of the manufacturers recommended installation and foundation requirements prior to actual field installation work, for Architects or Owners representatives review.

1.05 QUALITY ASSURANCE

A. Manufacturers warranties shall pass to the Owner and certification made that the product materials meet all applicable grade trademarks or conform to industry standards and inspection requirements.

1.06 PRODUCT DELIVERY AND STORAGE

A. Materials delivered to the site shall be examined for damage or defects in shipping. Any defects shall be noted and reported to the Owners representative. Replacements, if necessary, shall be immediately re-ordered, so as to minimize any conflict with the construction schedule. Sound materials shall be stored above ground under protective cover or indoors so as to provide proper protection.

PART 2 PRODUCTS

2.01 Cast Aluminum Shot Put Toe Board (Depressed Pad)

A. BASE: TFSPT001AL Shot Put Toe Board as manufactured by:

Sportsfield Specialties Inc.
P.O. Box 231
41155 State Highway 10
Delhi, NY 13753
p. 888-975-3343
f. 607-746-8481

B. COMPONENTS:

1. Model # TFSPT001AL Cast Aluminum Toe Board having the following attributes:
   A. Standard Size, 3.25in Height for Depressed Pad Installation
   B. Powder Coated White
   C. 34.92° Black Sector Identifiers

PART 3 EXECUTION

3.01 INSTALLATION OF EQUIPMENT

A. All athletic equipment shall be installed as recommended with manufacturer's written directions, and as indicated on the drawings.

END OF SECTION

DESIGNED TO MEET THE DEMANDS
OF MODERN SPORTS CONSTRUCTION

41155 ST. HWY 10
PO BOX 231
DELHI, NY 13753
TOLL FREE: 888-975-3343
FAX: 607-746-8481

FieldTurf USA Inc

SPORTSFIELD SPECIALTIES
WWW.SPORTSFIELDSPECIALTIES.COM

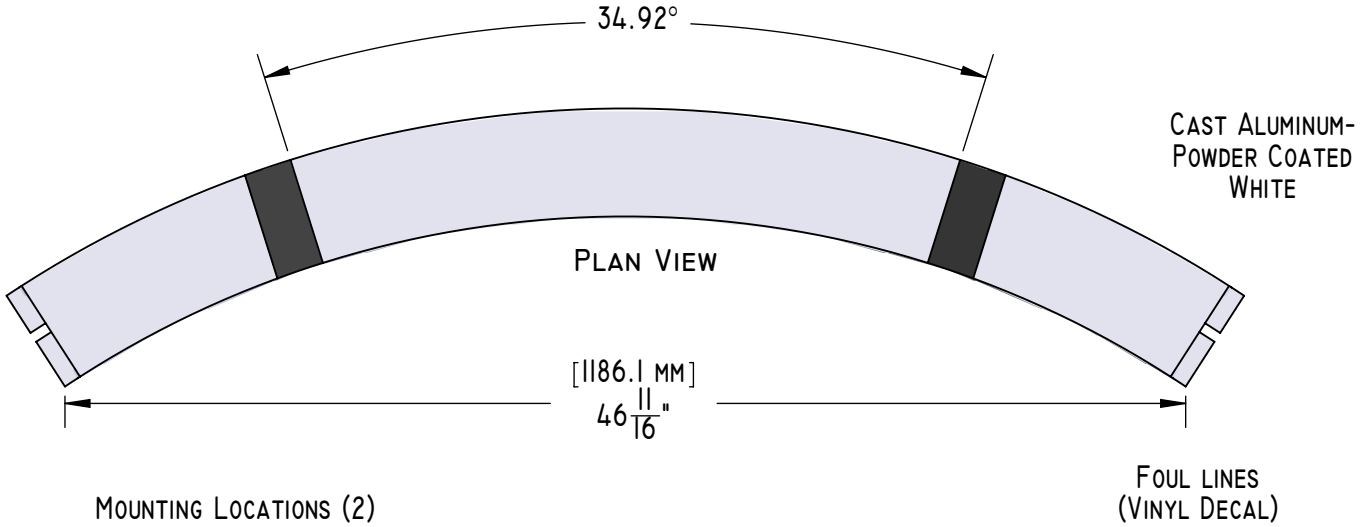

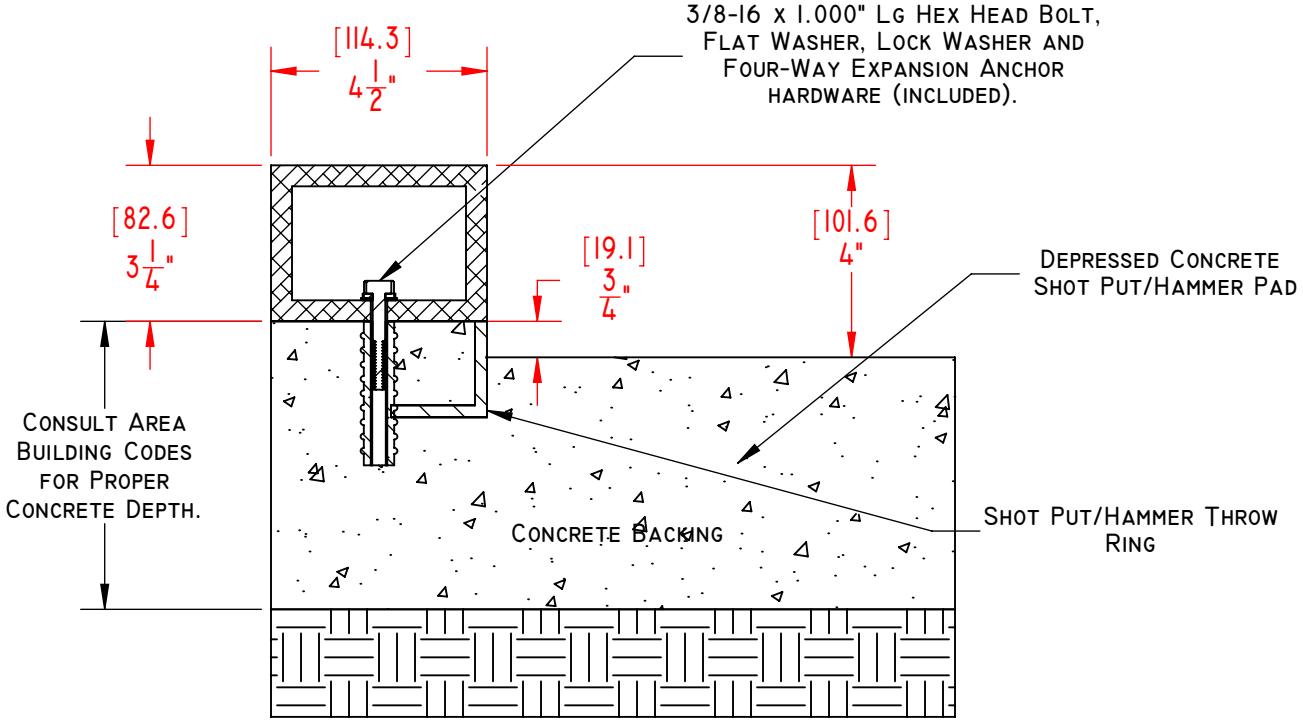

Side View

PROPRIETARY AND CONFIDENTIAL
THE INFORMATION CONTAINED IN THIS DRAWING IS THE SOLE PROPERTY OF SPORTSFIELD SPECIALTIES INC. ANY REPRODUCTION IN PART OR AS A WHOLE WITHOUT THE WRITTEN PERMISSION OF SPORTSFIELD SPECIALTIES INC. IS PROHIBITED.

TFSPT001AL - Shot Put Toe Board Depressed Pad Installation

Not To Scale

Sportsfield Specialties Inc 11012014

TFSWRING Webbed Shot Put/Hammer Throw Ring

SECTION 11480 Athletic Equipment - Field

PART 1 GENERAL

1.01 WORK INCLUDED

A. Provide all equipment and materials, and do all work necessary to furnish and install the athletic equipment, as indicated on the drawings and as specified herein. Athletic equipment shall include, but not be limited to:

1. TFSWRING Webbed Shot Put/Hammer Throw Ring

1.02 RELATED WORK

A. Examine contract documents for requirements that affect work of this section. Other specification sections that directly relate to the work of this section include, but are not limited to:

1. Section 02200 – Earthwork; Excavation and Backfill and establishment of sub-grade elevations.
2. Section 02511 – Asphalt, Concrete, and Pavement
3. Section 02535 – Synthetic Track Surfacing
4. Section 02542 – Synthetic Field Surfacing
5. Section 03300 – Cast-in-Place Concrete

1.03 REFERENCES

A. Comply with applicable requirements of the following standards. Where these standards conflict with other specified requirements, the most restrictive requirements shall govern.

1. National Federation of State High School Associations (NFHS)
2. National Collegiate Athletic Association (NCAA)
3. International Amateur Athletic Association (IAAF)
4. American Sports Builders Association (ASBA)
5. Manufacturers Data and Recommended Installation Requirements

1.04 SUBMITTALS

A. Manufacturers Product Data

1. Provide manufacturers product data prior to actual field installation work, for Architects or Owners representatives

review.

B. Shop Drawings

1. Provide drawings of the manufacturers recommended installation and foundation requirements prior to actual field installation work, for Architects or Owners representatives review.

1.05 QUALITY ASSURANCE

A. Manufacturers warranties shall pass to the Owner and certification made that the product materials meet all applicable grade trademarks or conform to industry standards and inspection requirements.

1.06 PRODUCT DELIVERY AND STORAGE

A. Materials delivered to the site shall be examined for damage or defects in shipping. Any defects shall be noted and reported to the Owners representative. Replacements, if necessary, shall be immediately re-ordered, so as to minimize any conflict with the construction schedule. Sound materials shall be stored above ground under protective cover or indoors so as to provide proper protection.

PART 2 PRODUCTS

2.01 Webbed Shot Put/Hammer Throw Ring

A. BASE: TFSWRING Webbed Shot Putt/Hammer Throw Ring as manufactured by:

Sportsfield Specialties Inc.
P.O. Box 231
41155 State Highway 10
Delhi, NY 13753
p. 888-975-3343
f. 607-746-8481

B. COMPONENTS:

1. TFSWRING fabricated with 2.0in x 2.0in x .25in Aluminum Angle, 84.0in Diameter, having the following attributes:
   A. Aluminum Web Reinforcement

PART 3 EXECUTION

3.01 INSTALLATION OF EQUIPMENT

A. All athletic equipment shall be installed as recommended with manufacturer's written directions, and as indicated on the drawings.

END OF SECTION

WJ 5000 Steeple Chase Water Jump Pit Specification

Section 11 6600 Athletic Equipment - Field
(Formally Section 11480)

PART 1: GENERAL

1.01 WORK INCLUDED

A. Provide all equipment and material, and do all work necessary to furnish and install the athletic equipment, as indicated on the drawings and as specified herein. Athletic equipment shall include, but not be limited to:

1. WJ5000 Steeple Chase Water Jump Pit Specification.

1.02 RELATED WORK

A. Examine contract documents for requirements that affect work of this section. Other specification sections that directly relate to the work of this section include, but are not limited to:

1. Section 02200 – Earthwork; Excavation and Backfill and establishment of sub-grade elevation.
2. Section 02700 – Asphalt, Concrete, and Pavement.
3. Section 02794 – Synthetic Grass & Turf.
4. Section 02793 – Synthetic Field Surfacing.
5. Section 03110 – Cast-in-Place Concrete.

1.03 REFERENCES

A. Comply with applicable requirements of the following standards. Where these standards conflict with other specified requirements, the most restrictive requirements shall govern.

1. National Collegiate Athletic Association (NCAA).
2. International Amateur Athletic Association (IAAF).
3. American Sports Builders Association (ASBA).
4. American Wood Preserver's Association (AWPA).
5. Manufactures Data and Recommended Installation Requirements.

1.04 SUBMITTALS

A. Manufacturers Product Data

1. Provide manufactures product data prior to actual field installation work, for Architects or Owners representatives review.

B. Shop Drawings

1. Provide drawings of the manufacturers recommended installation and foundation requirements prior to actual filed installation work, for Architects or Owners representatives review.

1.05 QUALITY ASSURANCE

A. Manufacturers warranties shall pass to the Owner and certification made that the product materials meet all applicable grade trademarks or conform to industry standards and inspection requirements.

1.06 PRODUCT DELIVERY AND STORAGE

A. Material delivered to the site shall be examined for damage or defects in shipping. Any defects shall be noted and reported to the Owners representative. Replacements, if necessary, shall be immediately re-ordered, so to minimize any conflict with the construction schedule. Sound materials shall be stored above ground under protective cover or indoors so as to provide proper protection.

PART 2: PRODUCTS

2.01 WJ500 STEEPLE CHASE WATER JUMP PIT

A. Base: NCAA/IAAF WJ5000 Steeple Chase Water Jump Pit as manufactured by:

Sportsfield Specialties, Inc.
P.O. Box 231
41155 State Highway 10
Delhi, NY 13753
p. 888-975-3343
f. 607-746-8481
www.sportsfieldspecialties.com.

B. Components

1. WJ500 Modular Water Jump Pit Assembly: Fabricated of 0.125 in thick aluminum, 12.0ft x 12.0ft interior dimensions, having the following attributes:
    A. Left Form Panel (5113), Right Form Panel (5114), Rear Form Panel (5115):
        1. Double-wall, gusset reinforced construction.
        2. Tapered side wall with 22.4% slope.
        3. Square joint bolt together construction.
        4. Built-in screed edge guide for synthetic surfacing.
        5. Built-in 3.0in Schedule 40 P.V.C. drainage valve:
            a. Located at center of front wall.
            b. Serviceable sealed plate at bottom of front wall.
        6. Water Stop:
            a. Continuous at floor/side wall joint.
        7. Barrier Sleeves:
            a. Aluminum Sleeves

b. Located at universal men's/woman's position.

B. Left Cover Ledge Assembly (5250) and Right Cover Ledge Assembly (5251):
   1. Fills void created by cover ledge when optional WJ5400 Cover set are not in place.
   2. Recessed 0.50in for synthetic surfacing.

C. T-Handle (5125):
   1. Key to open/close Drainage Valve.

D. Installation Package consisting of the following components:
   1. WJ5000-HD
      a. Assembly bolts, nuts, flat washers, lock washers-stainless steel.
      b. Gate Valve Sleeve Cover (5121-A).
      c. Hurdle Sleeve Cover (5121-B).

E. Spreader Bar (5118)
   1. 0.125in thick steel-formed channel, powder coated.

PART 3: EXECUTION

3.01 INSTALLATION OF EQUIPMENT

A. All athletic equipment shall be installed as recommended with manufacturer's written directions, and as indicated on the drawings.

END OF SECTION

DESIGNED TO MEET THE DEMANDS
OF MODERN SPORTS CONSTRUCTION

41155 St. Hwy 10
PO Box 231
Delhi, NY 13753
Toll Free: 888-975-3343
Fax: 607-746-8481

FieldTurf USA Inc

SPORTSFIELD SPECIALTIES
WWW.SPORTSFIELDSPECIALTIES.COM

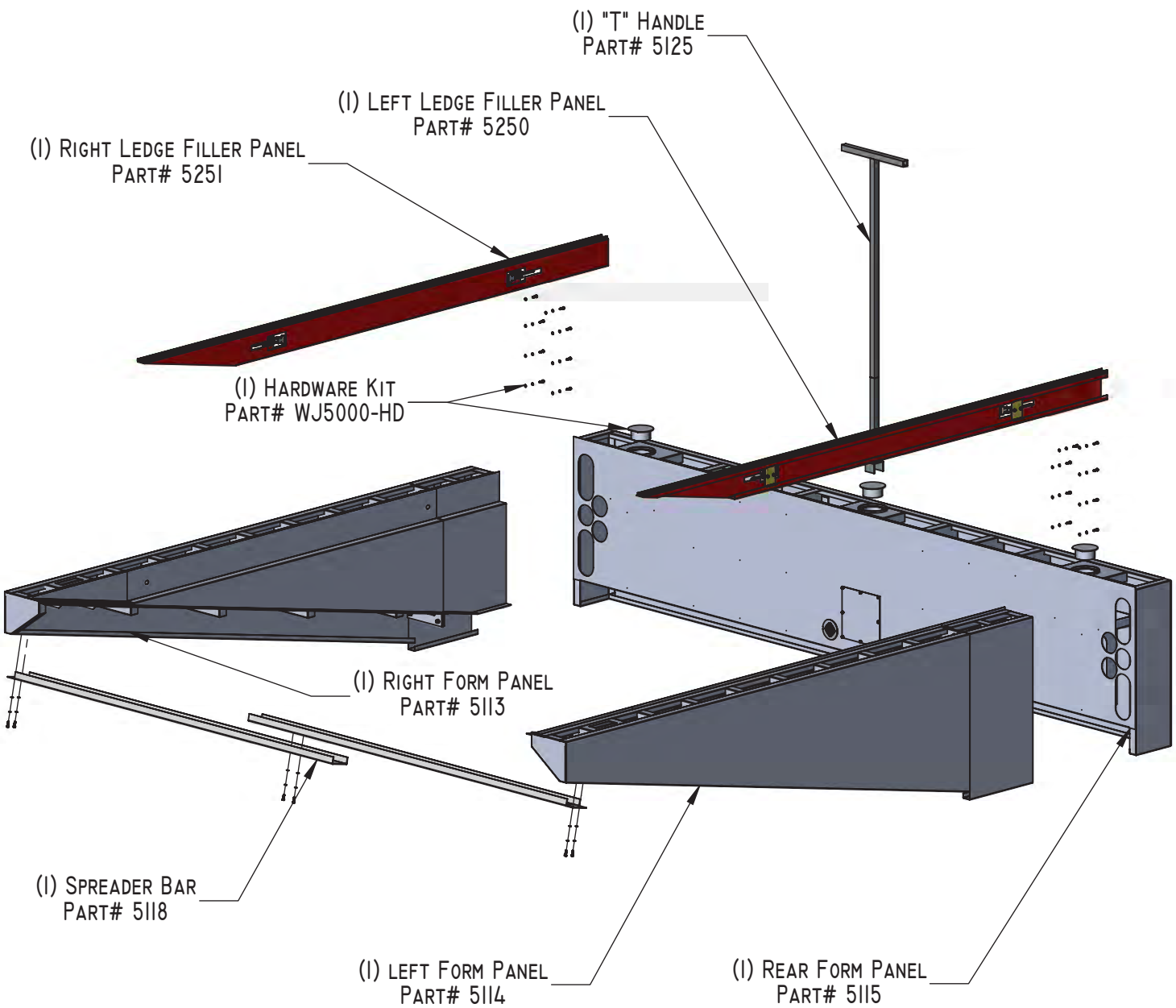

PROPRIETARY AND CONFIDENTIAL
THE INFORMATION CONTAINED IN THIS DRAWING IS THE SOLE PROPERTY OF SPORTSFIELD SPECIALTIES INC. ANY REPRODUCTION IN PART OR AS A WHOLE WITHOUT THE WRITTEN PERMISSION OF SPORTSFIELD SPECIALTIES INC. IS PROHIBITED.

WJ5000 Water Jump Pit
Steeplechase Elevation View

Not To Scale | Product Weight: 510 lbs. | Sportsfield Specialties Inc 11012014

DESIGNED TO MEET THE DEMANDS
OF MODERN SPORTS CONSTRUCTION

41155 ST. HWY 10
PO BOX 231
DELHI, NY 13753
TOLL FREE: 888-975-3343
FAX: 607-746-8481

FieldTurf USA Inc
SPORTSFIELD SPECIALTIES
WWW.SPORTSFIELDSPECIALTIES.COM

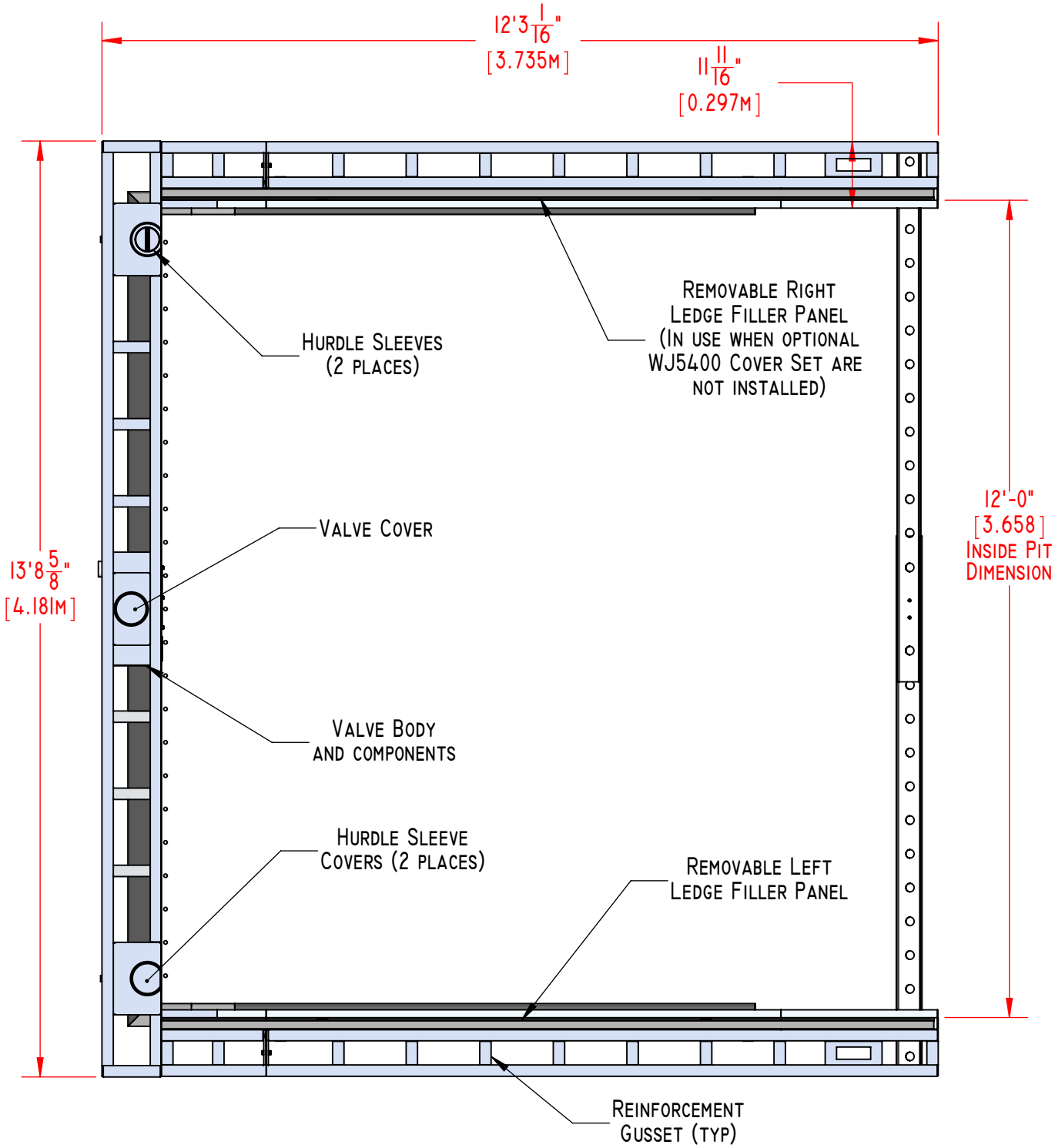

MEETS 2015-2016 N.C.A.A. RULES

NOTE: WJ5000 WATER JUMP PIT IS ALL ALUMINUM CONSTRUCTED.

PROPRIETARY AND CONFIDENTIAL
THE INFORMATION CONTAINED IN THIS DRAWING IS THE SOLE PROPERTY OF SPORTSFIELD SPECIALTIES INC. ANY REPRODUCTION IN PART OR AS A WHOLE WITHOUT THE WRITTEN PERMISSION OF SPORTSFIELD SPECIALTIES INC. IS PROHIBITED.

WJ5000 WATER JUMP PIT WITH LEDGE FILLERS
PLAN VIEW

NOT TO SCALE | PRODUCT WEIGHT: 510 LBS. | SPORTSFIELD SPECIALTIES INC 04272015

DESIGNED TO MEET THE DEMANDS
OF MODERN SPORTS CONSTRUCTION

41155 ST. HWY 10
PO BOX 231
DELHI, NY 13753
TOLL FREE: 888-975-3343
FAX: 607-746-8481

FieldTurf USA Inc

SPORTSFIELD SPECIALTIES
WWW.SPORTSFIELDSPECIALTIES.COM

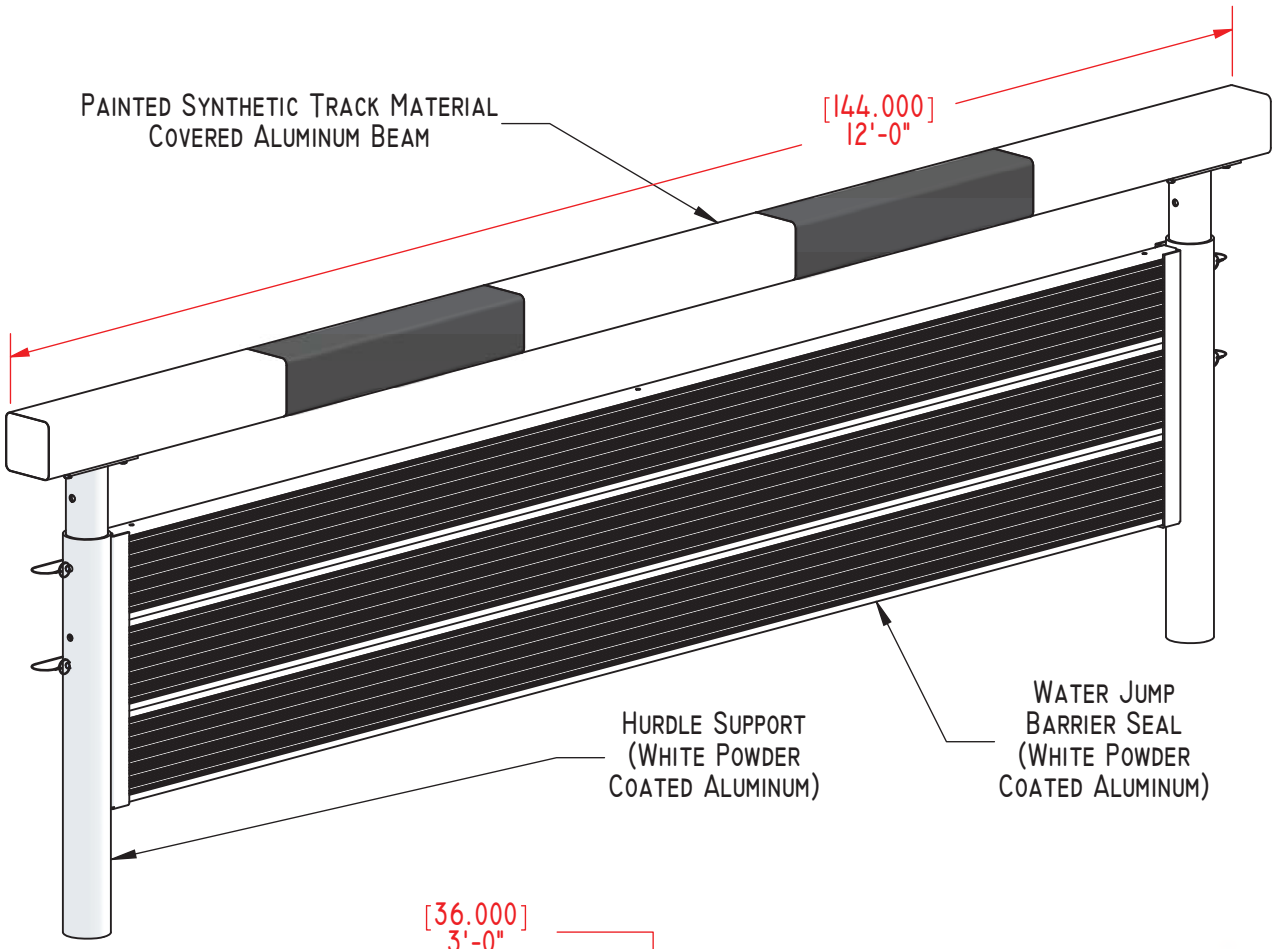

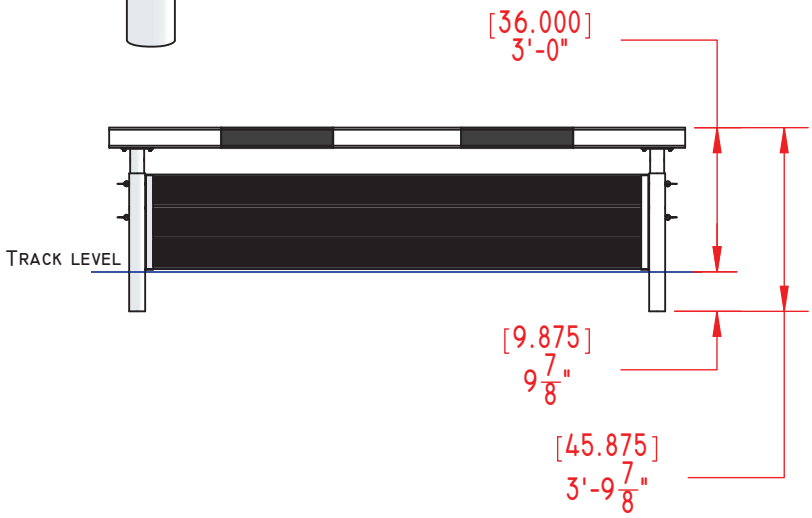

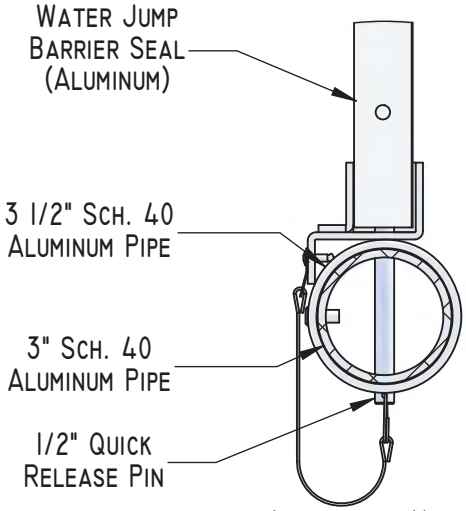

Adjustable Upright Detail

Note: Optional school name/logo on hurdle or sleeves for additional cost.

PROPRIETARY AND CONFIDENTIAL
THE INFORMATION CONTAINED IN THIS DRAWING IS THE SOLE PROPERTY OF SPORTSFIELD SPECIALTIES INC. ANY REPRODUCTION IN PART OR AS A WHOLE WITHOUT THE WRITTEN PERMISSION OF SPORTSFIELD SPECIALTIES INC. IS PROHIBITED.

Adjustable Steeple Chase Hurdle
WJ5020 Plan View - Men's Position

Not To Scale

Sportsfield Specialties Inc 11012014

DESIGNED TO MEET THE DEMANDS
OF MODERN SPORTS CONSTRUCTION

41155 ST. HWY 10
PO BOX 231
DELHI, NY 13753
TOLL FREE: 888-975-3343
FAX: 607-746-8481

FieldTurf USA Inc

SPORTSFIELD SPECIALTIES
WWW.SPORTSFIELDSPECIALTIES.COM

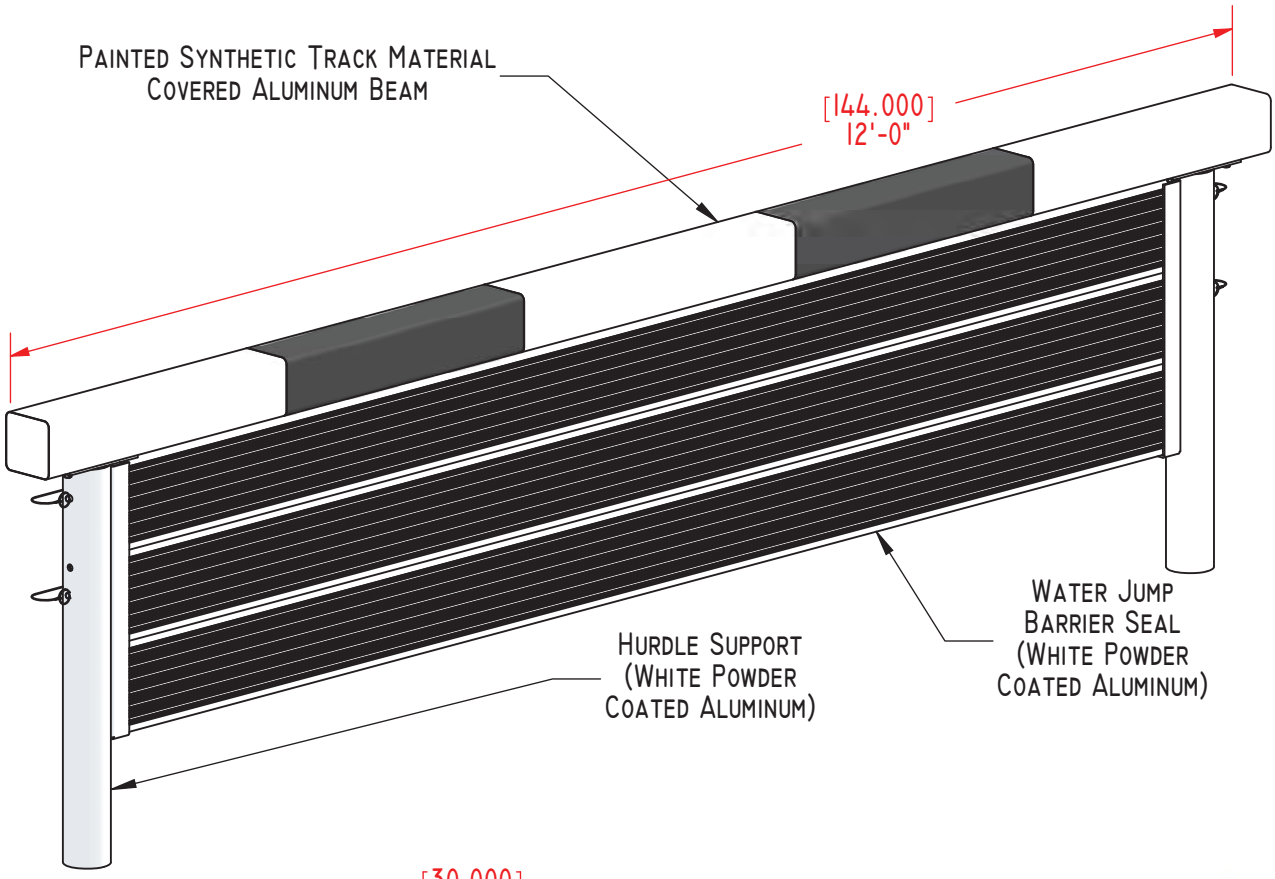

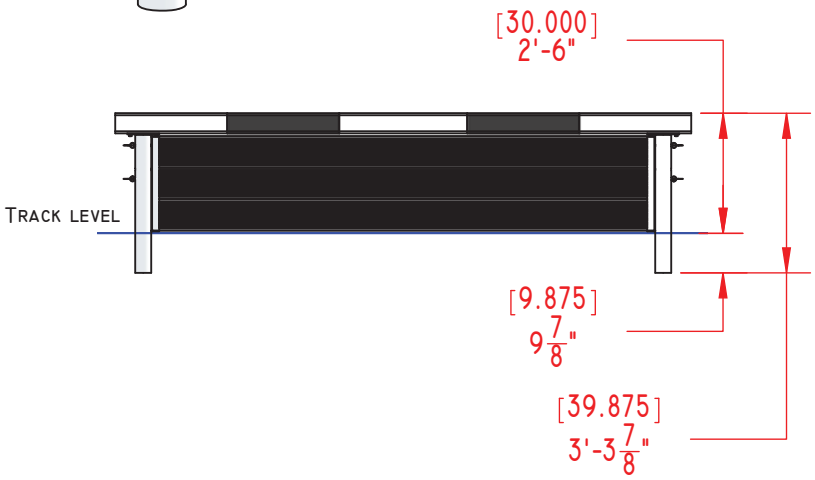

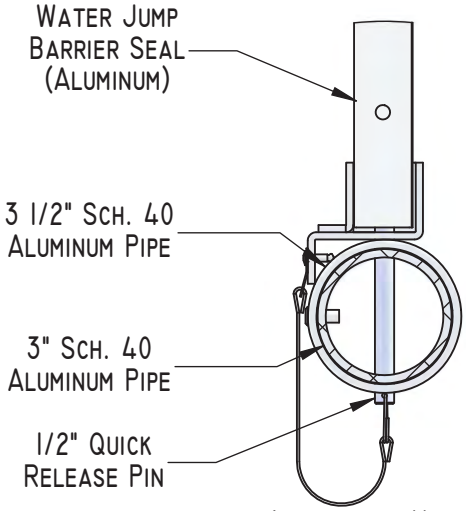

Adjustable Upright Detail

Note: Optional school name/logo on hurdle or sleeves for additional cost.

PROPRIETARY AND CONFIDENTIAL
THE INFORMATION CONTAINED IN THIS DRAWING IS THE SOLE PROPERTY OF SPORTSFIELD SPECIALTIES INC. ANY REPRODUCTION IN PART OR AS A WHOLE WITHOUT THE WRITTEN PERMISSION OF SPORTSFIELD SPECIALTIES INC. IS PROHIBITED.

Adjustable Steeple Chase Hurdle
WJ5020 Plan View - Women's Position

Not To Scale

Sportsfield Specialties Inc 11012014

DESIGNED TO MEET THE DEMANDS
OF MODERN SPORTS CONSTRUCTION

41155 ST. HWY 10
PO BOX 231
DELHI, NY 13753
TOLL FREE: 888-975-3343
FAX: 607-746-8481

FieldTurf USA Inc

SPORTSFIELD SPECIALTIES
WWW.SPORTSFIELDSPECIALTIES.COM

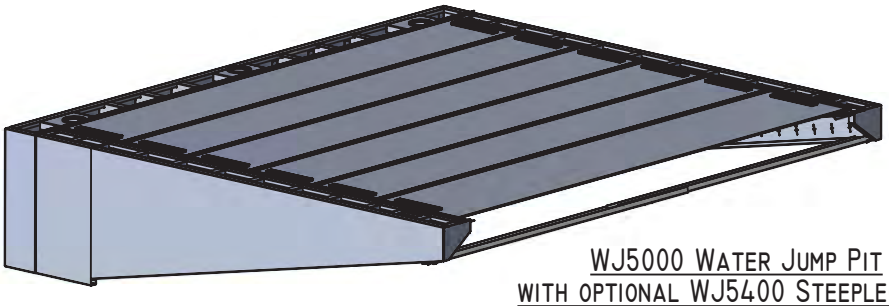

WJ5000 Water Jump Pit
with optional WJ5400 Steeplechase
Cover Set

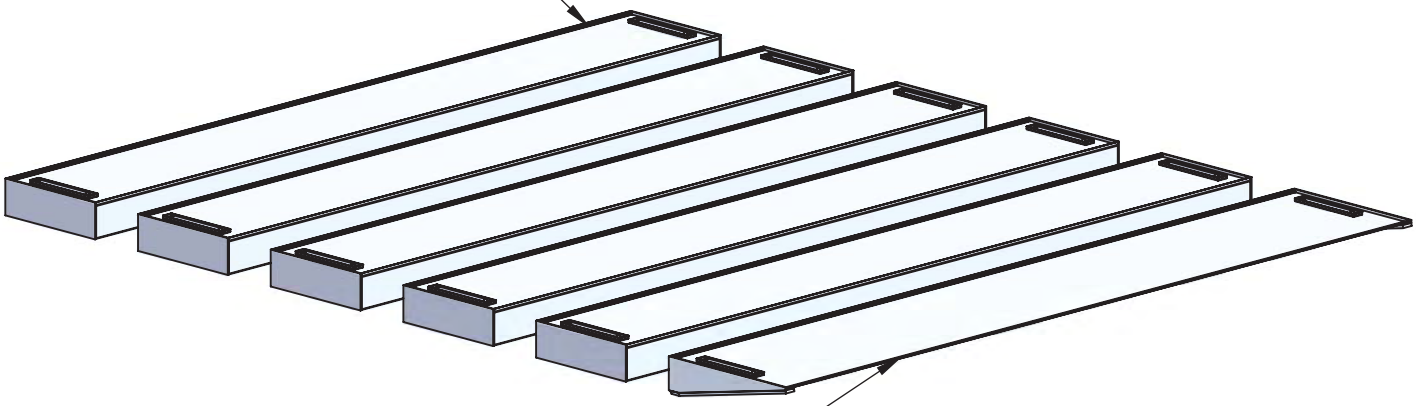

PROPRIETARY AND CONFIDENTIAL
THE INFORMATION CONTAINED IN THIS DRAWING IS THE SOLE PROPERTY OF SPORTSFIELD SPECIALTIES INC. ANY REPRODUCTION IN PART OR AS A WHOLE WITHOUT THE WRITTEN PERMISSION OF SPORTSFIELD SPECIALTIES INC. IS PROHIBITED.

WJ5400 Steeplechase Water jump Pit Panel Cover Set

Not To Scale | Product Weight: 540 lbs. | Sportsfield Specialties Inc 11012014

TFLTP012SS International 12" Long/Triple Jump Take-Off Board

SECTION 11480 Athletic Equipment - Track & Field

PART 1 GENERAL

1.01 WORK INCLUDED

A. Provide all equipment and materials, and do all work necessary to furnish and install the athletic equipment, as indicated on the drawings and as specified herein. Athletic equipment shall include, but not be limited to:

1. TFLTP012SS International 12" Take-Off Board

1.02 RELATED WORK

A. Examine contract documents for requirements that affect work of this section. Other specification sections that directly relate to the work of this section include, but are not limited to:

1. Section 02200 – Earthwork; Excavation and Backfill and establishment of sub-grade elevations.
2. Section 02511 – Asphalt, Concrete, and Pavement
3. Section 02535 – Synthetic Track Surfacing
4. Section 02542 – Synthetic Field Surfacing
5. Section 03300 – Cast-in-Place Concrete

1.03 REFERENCES

A. Comply with applicable requirements of the following standards. Where these standards conflict with other specified requirements, the most restrictive requirements shall govern.

1. National Federation of State High School Associations (NFHS)
2. National Collegiate Athletic Association (NCAA)
3. International Amateur Athletic Association (IAAF)
4. American Sports Builders Association (ASBA)
5. American Wood Preserver's Association (AWPA)
6. Manufacturers Data and Recommended Installation Requirements

1.04 SUBMITTALS

A. Manufacturers Product Data

1. Provide manufacturers product data prior to actual field

installation work, for Architects or Owners representatives review.

B. Shop Drawings

1. Provide drawings of the manufacturers recommended installation and foundation requirements prior to actual field installation work, for Architects or Owners representatives review.

1.05 QUALITY ASSURANCE

A. Manufacturers warranties shall pass to the Owner and certification made that the product materials meet all applicable grade trademarks or conform to industry standards and inspection requirements.

1.06 PRODUCT DELIVERY AND STORAGE

A. Materials delivered to the site shall be examined for damage or defects in shipping. Any defects shall be noted and reported to the Owners representative. Replacements, if necessary, shall be immediately re-ordered, so as to minimize any conflict with the construction schedule. Sound materials shall be stored above ground under protective cover or indoors so as to provide proper protection.

PART 2 PRODUCTS

2.01 International 12" Long/Triple Jump Take-Off Board

A. BASE: TFLTP012SS International 12" Take-Off Board as manufactured by:

Sportsfield Specialties Inc.
P.O. Box 231
41155 State Highway 10
Delhi, NY 13753
p. 888-975-3343
f. 607-746-8481

B. COMPONENTS:

1. International Model # TFLT012SS, 12.0in 16 Gauge Stainless Steel Tray, with Stainless Steel insert containing double surface support, 0.75in White Synthetic Polyboard Board, 0.75in Yellow Synthetic Polyboard Foul Strip, Lift Handles for Insert Removal, Stainless Steel

Adjustment Bolts, and 2 lbs of 'Jolly King' Plasticene. Overall Dimensions: 2.81in x 12.0in x 48.0in

PART 3 EXECUTION

3.01 INSTALLATION OF EQUIPMENT

A. All athletic equipment shall be installed as recommended with manufacturer's written directions, and as indicated on the drawings.

END OF SECTION

DESIGNED TO MEET THE DEMANDS
OF MODERN SPORTS CONSTRUCTION

41155 ST. HWY 10
PO BOX 231
DELHI, NY 13753
TOLL FREE: 888-975-3343
FAX: 607-746-8481

FieldTurf USA Inc

SPORTSFIELD SPECIALTIES
WWW.SPORTSFIELDSPECIALTIES.COM

UNITED STATES PATENT # 8,337,318, ISSUED DECEMBER 25, 2012

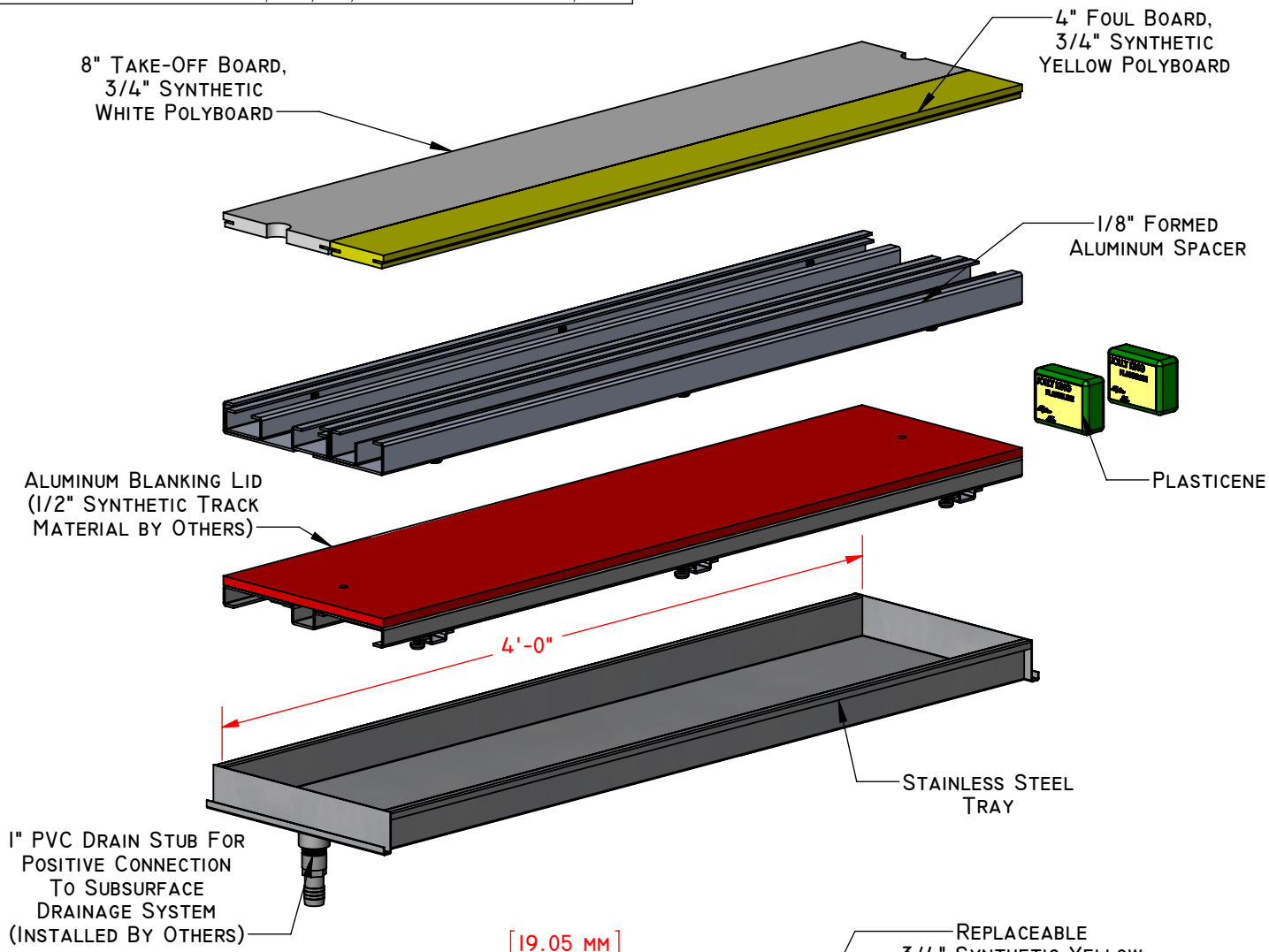

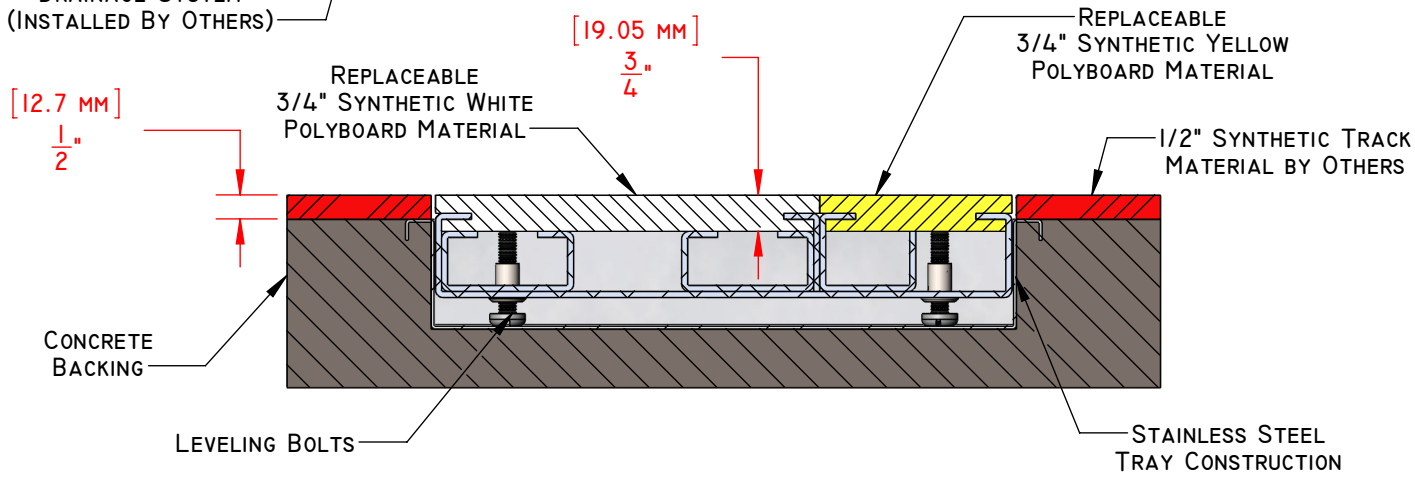

PROPRIETARY AND CONFIDENTIAL
THE INFORMATION CONTAINED IN THIS DRAWING IS THE SOLE PROPERTY OF SPORTSFIELD SPECIALTIES INC. ANY REPRODUCTION IN PART OR AS A WHOLE WITHOUT THE WRITTEN PERMISSION OF SPORTSFIELD SPECIALTIES INC. IS PROHIBITED.

TFLTP012SS-SYN - 12" LONG/TRIPLE JUMP TAKE-OFF BOARD SYSTEM WITH REPLACEMENT BLANKING LID

NOT TO SCALE

SPORTSFIELD SPECIALTIES INC 02272015

DESIGNED TO MEET THE DEMANDS
OF MODERN SPORTS CONSTRUCTION

41155 St. Hwy 10
PO Box 231
Delhi, NY 13753
Toll Free: 888-975-3343
Fax: 607-746-8481

FieldTurf USA Inc

SPORTSFIELD SPECIALTIES

WWW.SPORTSFIELDSPECIALTIES.COM

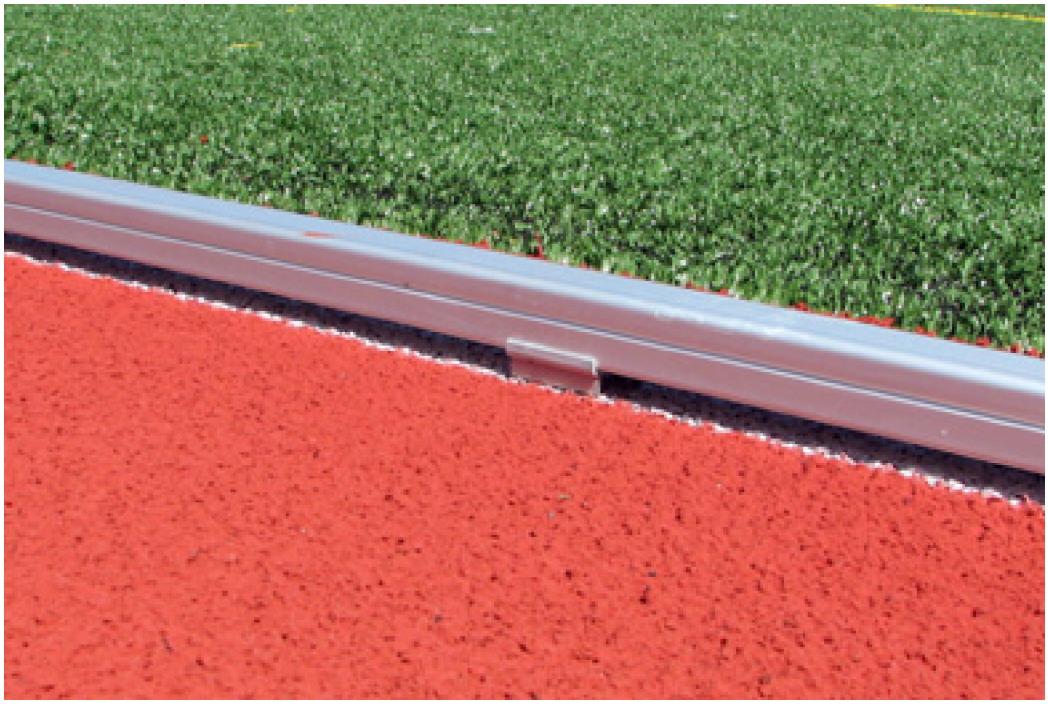

Made from Two inch Square (2" x 2") heavy Gauge Aluminum Tube

Sections Measure Twenty Feet (20') in Length and are Numbered for Ease of installation

Form Fitted and Manufactured to Exact Track Specifications From Provided Project Layout Drawings and information, *REQUIRED-BY OTHERS*

Curbing Splits 1/2" Above Synthetic Track Surface on Anchor Clips For Efficient Drainage

Aluminum Finish is Silver or Gold Anodized (Electroplated)

IAAF, NCAA, and USATF Rules Compliant

PROPRIETARY AND CONFIDENTIAL
THE INFORMATION CONTAINED IN THIS DRAWING IS THE SOLE PROPERTY OF SPORTSFIELD SPECIALTIES INC. ANY REPRODUCTION IN PART OR AS A WHOLE WITHOUT THE WRITTEN PERMISSION OF SPORTSFIELD SPECIALTIES INC. IS PROHIBITED.

TF852A - Gill Athletics Anodized Aluminum Track Curb

Not To Scale

Sportsfield Specialties Inc 07262012

SPORTSFIELD SPECIALTIES
WWW.SPORTSFIELDSPECIALTIES.COM
Excellence from Design to Installation
41155 State Highway 10, PO Box 231, Delhi, NY 13753 CALL: 888-975-3343 FAX: 607-746-8481

Standard White Powder Coated Finish

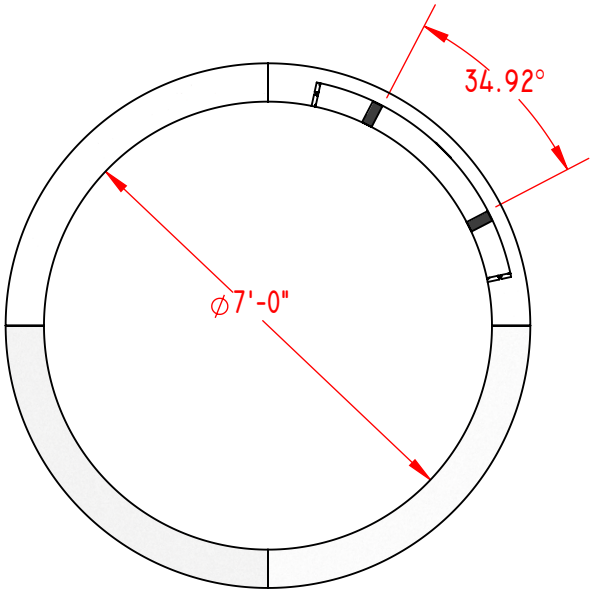

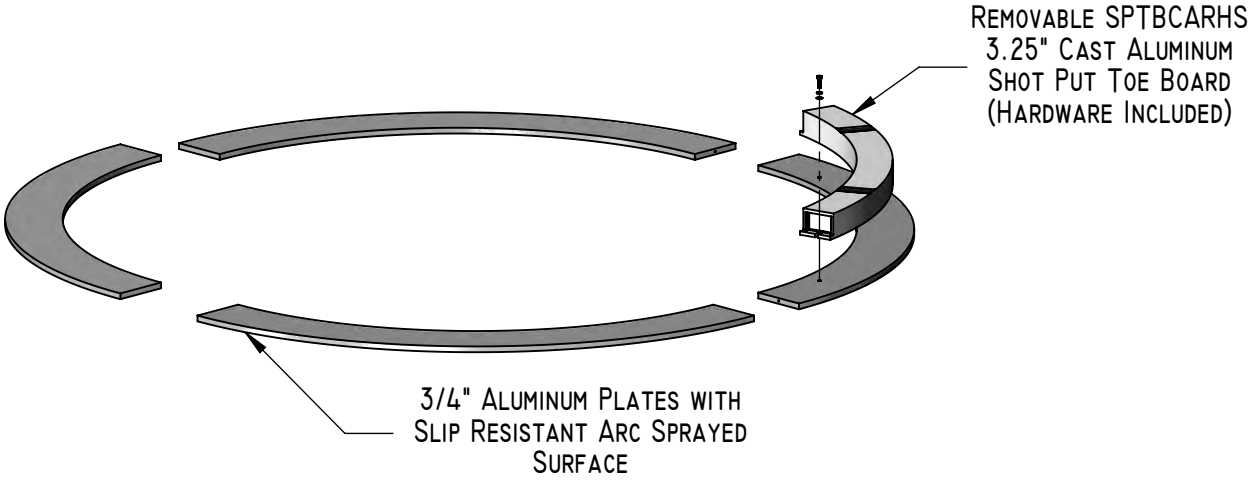

Assembly Converts Existing Discus Ring to Shot Put/Hammer Ring

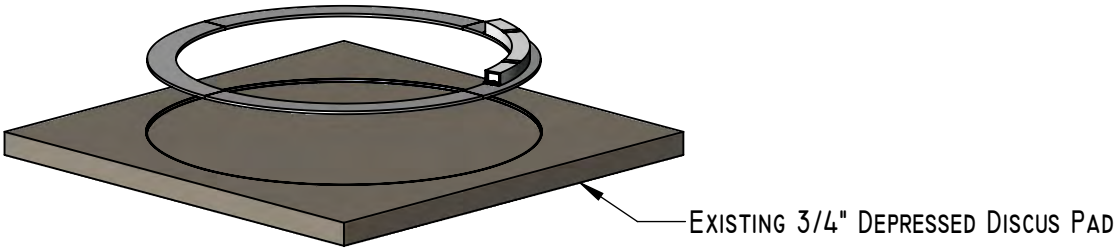

PROPRIETARY AND CONFIDENTIAL
THE INFORMATION CONTAINED IN THIS DRAWING IS THE SOLE PROPERTY OF SPORTSFIELD SPECIALTIES INC. ANY REPRODUCTION IN PART OR AS A WHOLE WITHOUT THE WRITTEN PERMISSION OF SPORTSFIELD SPECIALTIES INC. IS PROHIBITED.

TRSPHC (TFSPCR) - Shot Put/Hammer Conversion Ring

Not To Scale

Sportsfield Specialties Inc 03282019

SPORTSFIELD SPECIALTIES
WWW.SPORTSFIELDSPECIALTIES.COM
Excellence from Design to Installation
41155 State Highway 10, PO Box 231, Delhi, NY 13753 CALL: 888-975-3343 FAX: 607-746-8481

For Use With:
SG824S
SG721S
SG618S

Mobility wheel kit for use with synthetic turf or natural grass applications

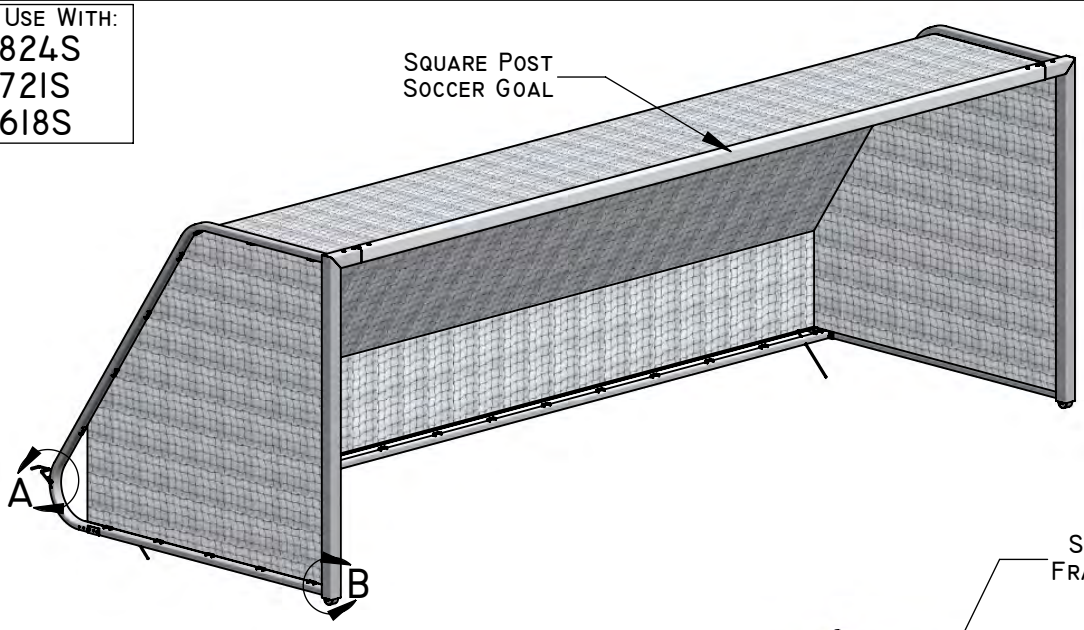

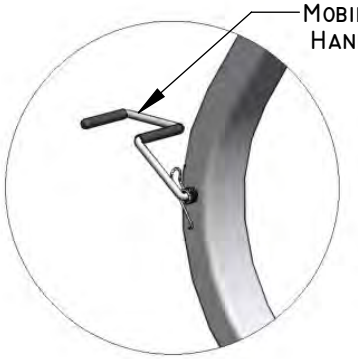

DETAIL A

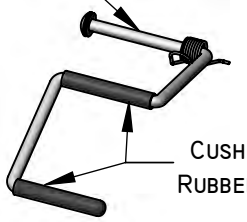

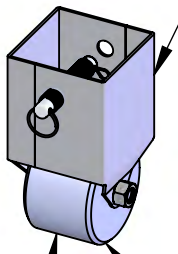

DETAIL B

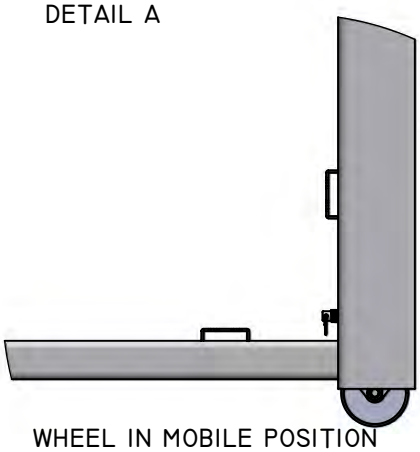

WHEEL IN MOBILE POSITION

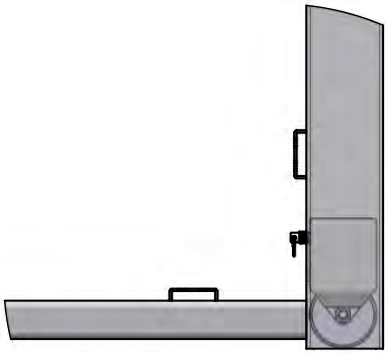

WHEEL IN GAME POSITION

PROPRIETARY AND CONFIDENTIAL
THE INFORMATION CONTAINED IN THIS DRAWING IS THE SOLE PROPERTY OF SPORTSFIELD SPECIALTIES INC. ANY REPRODUCTION IN PART OR AS A WHOLE WITHOUT THE WRITTEN PERMISSION OF SPORTSFIELD SPECIALTIES INC. IS PROHIBITED.

SGMKS (SG4905) SGMobile®
Square Post Soccer Goal Integrated Wheel Kit

Not To Scale

Sportsfield Specialties Inc 07262016

SPORTSFIELD SPECIALTIES
WWW.SPORTSFIELDSPECIALTIES.COM
Excellence from Design to Installation
41155 State Highway 10, PO Box 231, Delhi, NY 13753 CALL: 888-975-3343 FAX: 607-746-8481

GPAFIT Access Frame Kit + for use with Ground Sleeve and Base Plate Mount AdjustRight® Football Goal Posts Installed in Synthetic Turf Applications

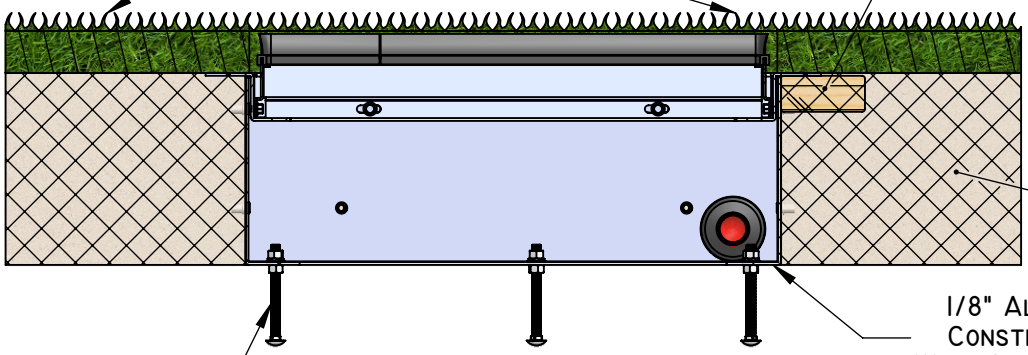

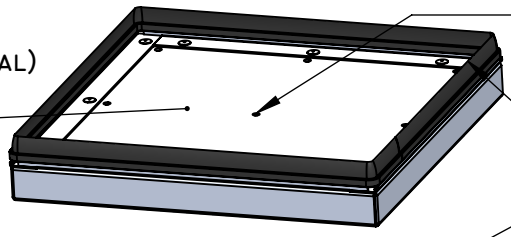

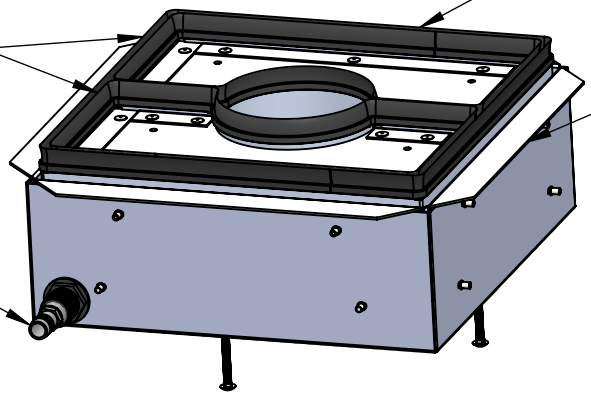

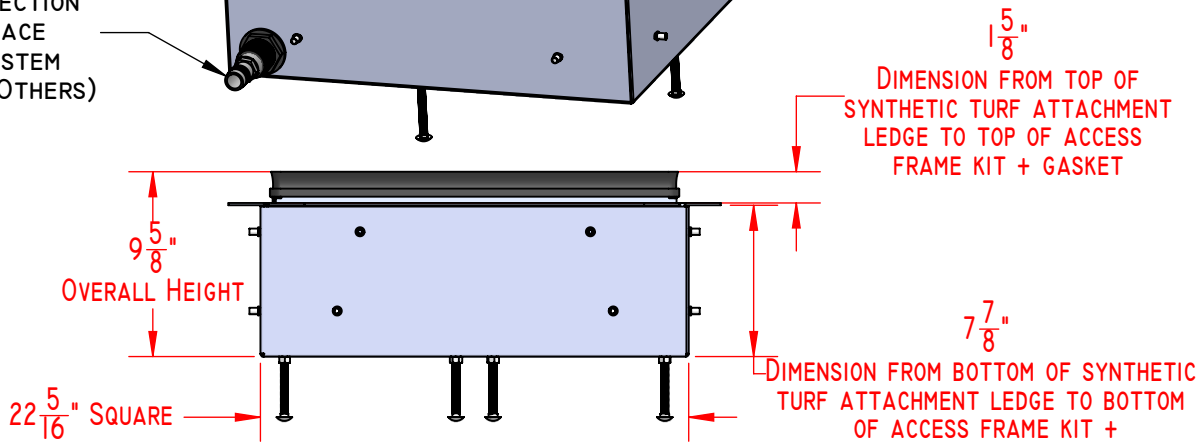

PROPRIETARY AND CONFIDENTIAL
THE INFORMATION CONTAINED IN THIS DRAWING IS THE SOLE PROPERTY OF SPORTSFIELD SPECIALTIES INC. ANY REPRODUCTION IN PART OR AS A WHOLE WITHOUT THE WRITTEN PERMISSION OF SPORTSFIELD SPECIALTIES INC. IS PROHIBITED.

GPAFIT (GP4570) Access Frame Kit + with Infill Retainer System for Synthetic Turf Applications

Not To Scale

Sportsfield Specialties Inc 08222017

SPORTSFIELD SPECIALTIES
WWW.SPORTSFIELDSPECIALTIES.COM

Excellence from Design to Installation
41155 State Highway 10, PO Box 231, Delhi, NY 13753 CALL: 888-975-3343 FAX: 607-746-8481

Optional Equipment:
SGMobile® Integrated Soccer Goal Wheel Kit - SGMKR
Soccer Goal Safety System - SG2S®
United States Patent #7,331,880, Issued February 19, 2008
United States Patent #7,527,569, Issued May 5, 2009
United States Patent #8,777,784, Issued July 15, 2014

Meets and exceeds ASTM F2950-14 Standard Safety and Performance Specification for Soccer Goals and ASTM F1938-98 Standard Guide for Safer Use of Movable Soccer Goals

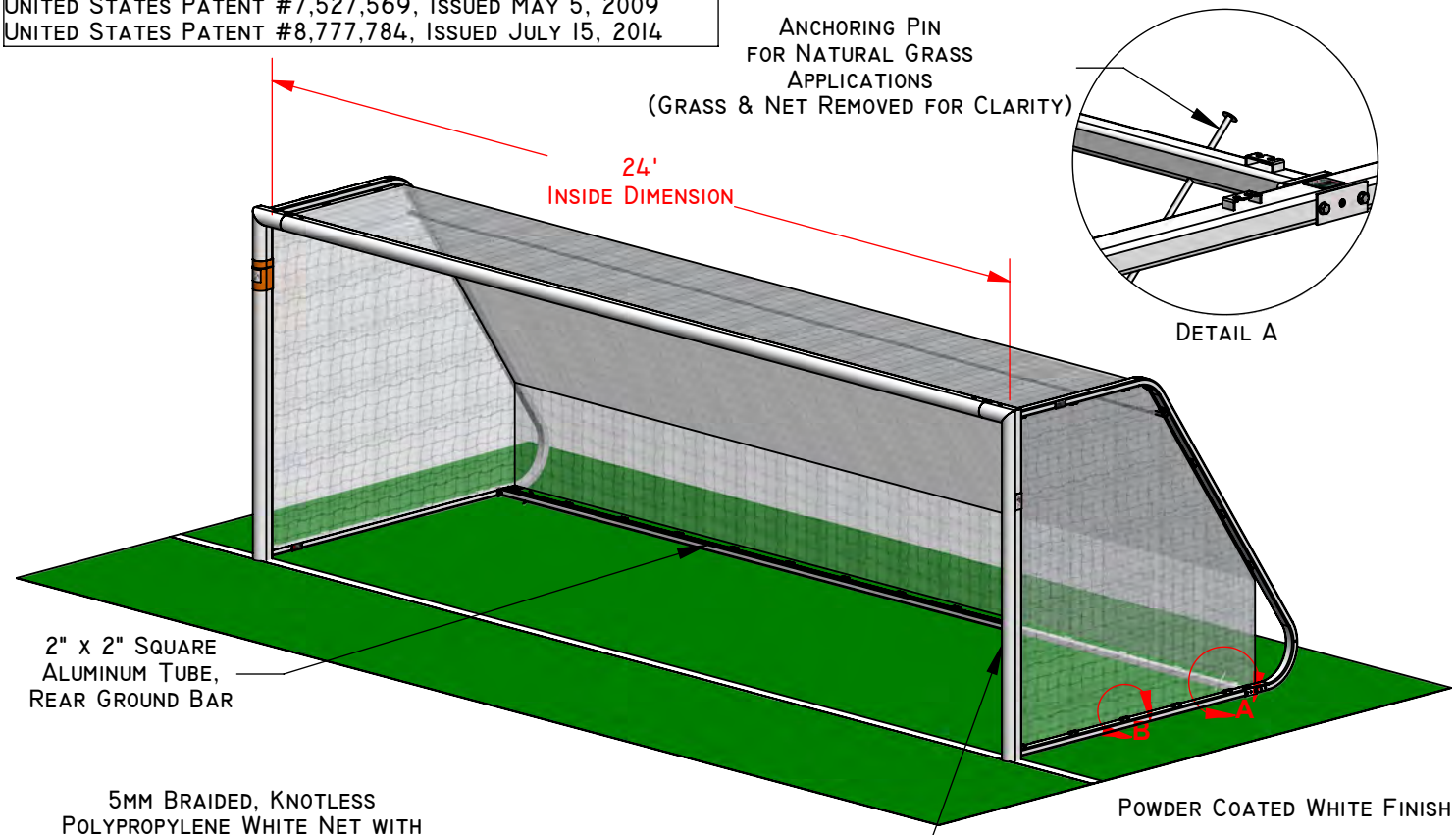

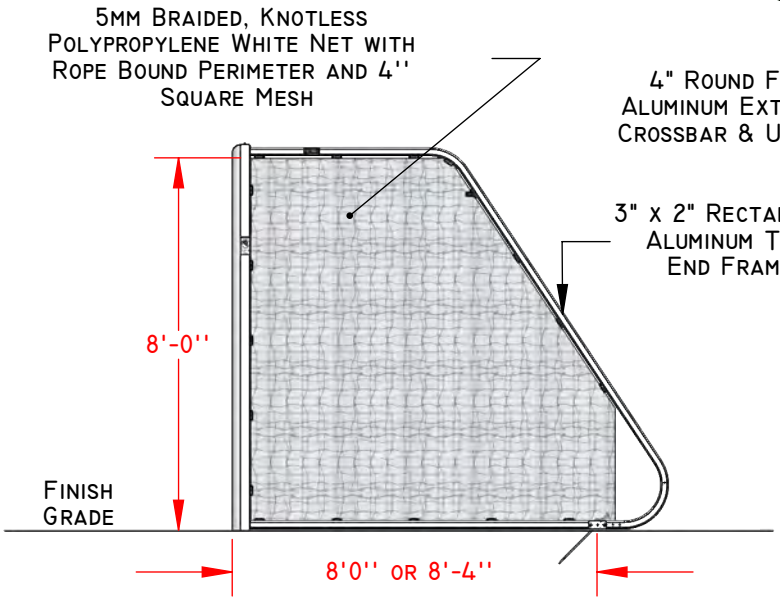

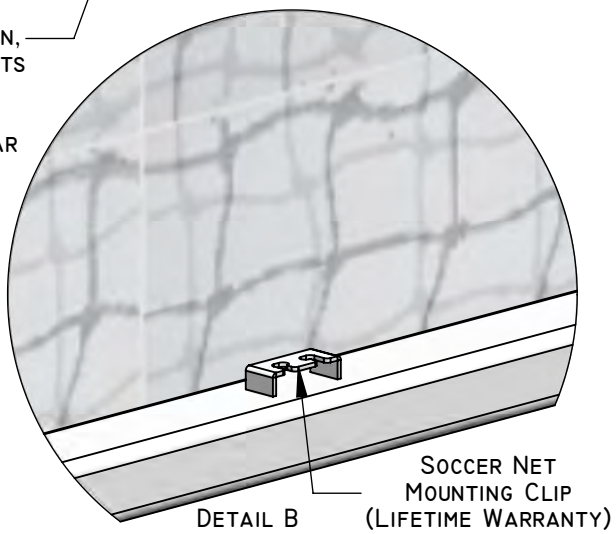

PROPRIETARY AND CONFIDENTIAL
THE INFORMATION CONTAINED IN THIS DRAWING IS THE SOLE PROPERTY OF SPORTSFIELD SPECIALTIES INC. ANY REPRODUCTION IN PART OR AS A WHOLE WITHOUT THE WRITTEN PERMISSION OF SPORTSFIELD SPECIALTIES INC. IS PROHIBITED.

SG824R (SG4950) 8' x 24' Regulation Size Round Faced Soccer Goal

Not To Scale

Sportsfield Specialties Inc 08202018

SPORTSFIELD SPECIALTIES
WWW.SPORTSFIELDSPECIALTIES.COM
Excellence from Design to Installation
41155 State Highway 10, PO Box 231, Delhi, NY 13753 CALL: 888-975-3343 FAX: 607-746-8481

FOUNDATION REQUIREMENTS BASED ON LOCAL CODES AND SOIL CONDITIONS

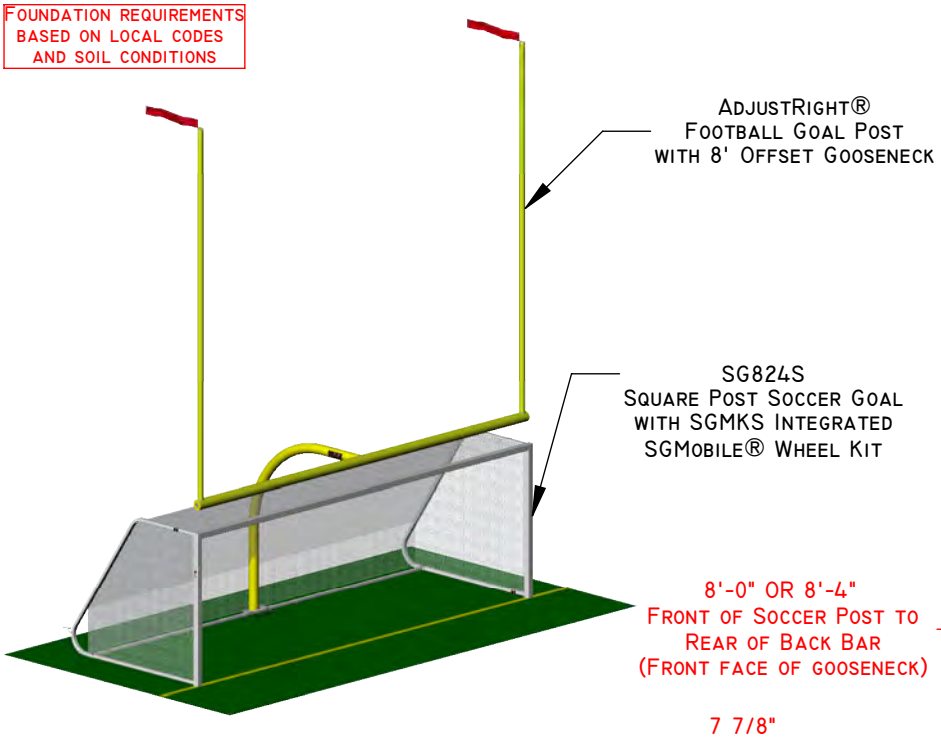

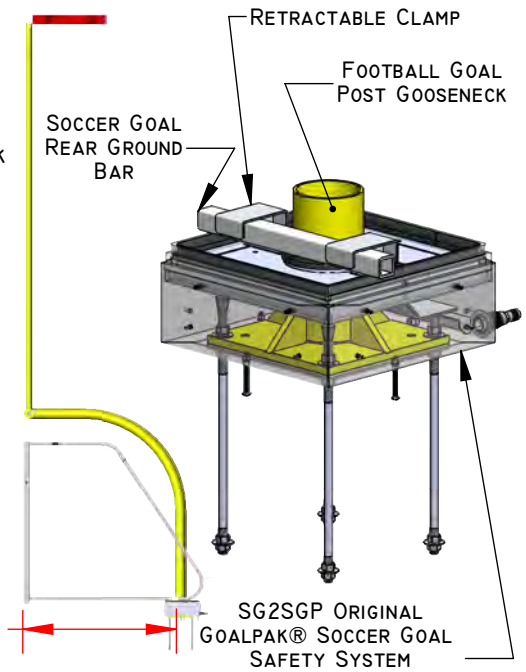

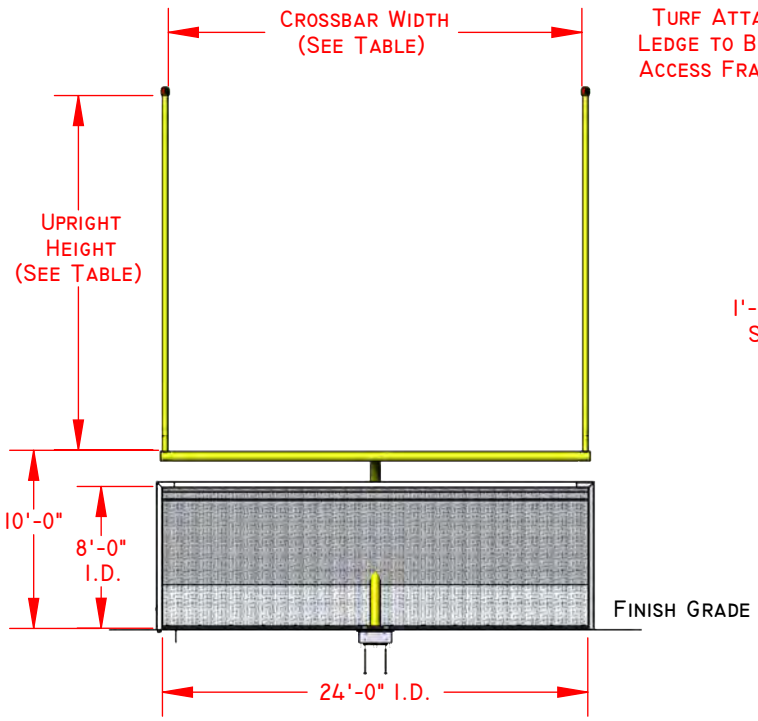

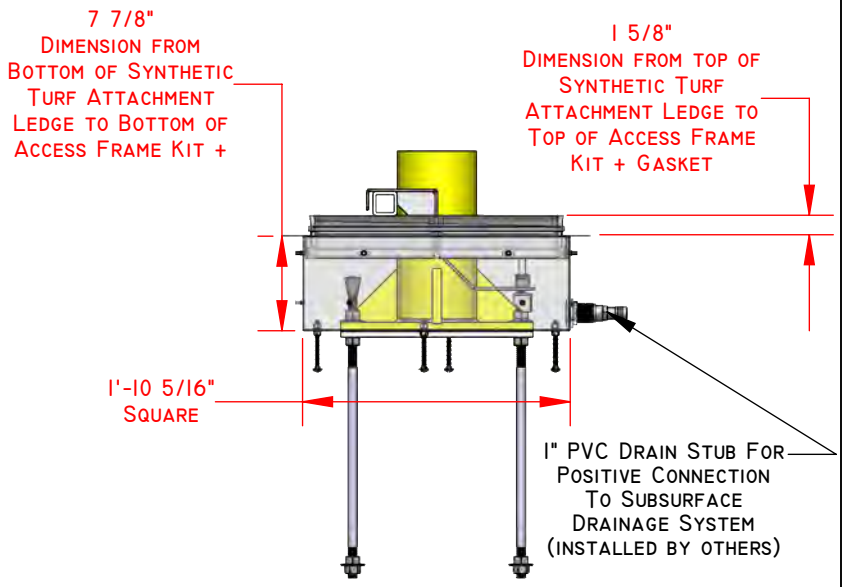

PART NO.	UPRIGHT HEIGHT	MODEL	CROSSBAR WIDTH (I.D.)
GPKS20ADJPL	20'-0"	ADJUSTABLE	18'-6" / 23'-4"
GPKS20COLPL	20'-0"	COLLEGE	18'-6"
GPKS20HSPL	20'-0"	HIGH SCHOOL	23'-4"
GPKS30ADJPL	30'-0"	ADJUSTABLE	18'-6" / 23'-4"
GPKS30COLPL	30'-0"	COLLEGE	18'-6"
GPKS30HSPL	30'-0"	HIGH SCHOOL	23'-4"

PROPRIETARY AND CONFIDENTIAL
THE INFORMATION CONTAINED IN THIS DRAWING IS THE SOLE PROPERTY OF SPORTSFIELD SPECIALTIES INC. ANY REPRODUCTION IN PART OR AS A WHOLE WITHOUT THE WRITTEN PERMISSION OF SPORTSFIELD SPECIALTIES INC. IS PROHIBITED.

ORIGINAL GOALPAK® FOOTBALL / SQUARE SOCCER GOAL SYSTEM, BASE PLATED MOUNTED

NOT TO SCALE

SPORTSFIELD SPECIALTIES INC 12082017

Attachment 4 - Category 3 - Running Track, Tennis and Athletic Courts Specs - FieldTurf USA, Inc.

BEYNON®
A Tarkett Sports Company

Beynon Sports – FastTrack Maintenance Program

Designed to keep your track looking great, Beynon Sports FastTrack Maintenance Program offers the following options for your running track surface:

- Track Cleaning – one time visit to clean your running track
- Track Restripe – one time visit to restripe your existing track line and event markings
- Clean & Restripe – one time visit to clean and restripe your running track
- 3 Year Maintenance Program
    - Includes annual track surface inspections
    - Two deep surface track cleanings and one dry sweep in alternating visits
    - One restripe of all existing lane lines and event markings

Contact your Beynon Sports representative for program pricing and scheduling

Bidder: FieldTurf USA, Inc.
G.3
6 yr warranty

½" RED POLYRESIN TRACK SYSTEM

1.0 DESCRIPTION

This specification covers the installation of a new, high performance resilient track surfacing system for new asphalt surfaces. This track system utilizes specially compounded, pigmented, water-based binders and both EPDM and SBR rubber granules to provide strength, flexibility and to prevent ultra violet degradation. Multiple topcoats are applied to further protect against harmful UV rays and to reduce wear. The system provides a durable, resilient, spike resistant surface for recreational and competitive use.

NOTE: The success of the running track surface is dependent on a sound base (with good drainage) and the asphalt concrete meeting the requirements of The National Asphalt Paving Association and the American Sports Builders Association. Variations of the existing asphalt subsurface should not exceed 1/8" in 10' when measured in any direction with a straightedge.

2.0 MATERIALS – All liquid products shall be supplied by one manufacturer.

2.1 **Court Patch Binder**

2.2 **Latex tack coat**

2.3 **Polyresin Binder** – (Red).

2.4 **Rubber Granules** – Select granules for base layers approved by the manufacturer (Black).

2.5 **EPDM Granules** – Select granules for top layers approved by the manufacturer. (Red)

2.5 P**olyresin Coating** – (Red).

2.6 **Line Paint**

2.7 **Pigment** – Water-borne pigment for enhanced color depth (Red).

2.8 **Water** – The water used in all mixtures shall be fresh and potable.

TOP COAT
Product Specifications

G.3 - Bidder: FieldTurf USA, Inc.

PART 1 – GENERAL

1.1 SUMMARY

A. Product Name: TOP COAT.

B. Product Description: Pour-in-place, all-weather synthetic track re-surface consisting of polymer resin binders and rubber granules.

C. Scope of Work: Furnish all required labor, materials and equipment to successfully install the specified all-weather synthetic track surface including striping and markings.

1.2 RELATED WORK

A. Earthwork
B. Drainage
C. Asphaltic Concrete Paving
D. Cast-in-Place Concrete
E. Synthetic Turf

1.3 REFERENCE STANDARDS

A. The work shall conform to the standards for track construction as prescribed or approved by the appropriate governing body; NFHS, NCAA, or IAAF.
   1. NFSHSA *Track and Field Rules.*
   2. ASBA *Running Tracks Construction and Maintenance Manual.*

1.4 SUBMITTALS

A. Product Data
B. Striping Diagram
C. Operation and Maintenance Manual
D. Warranty

1.5 QUALITY ASSURANCE

A. Synthetic surfacing contractor (SSC) shall be licensed and bonded and possess a valid contractor's license in the state where Work is performed.

B. SSC shall have a minimum of 5 years experience installing the specified all-weather track surface under the same corporate name as current operations.

1.6 PROJECT CONDITIONS

A. SSC, General Contractor (GC) and/or Owner, shall conduct a pre-construction meeting to review project conditions prior to dispatch of the SSC's installation team.

B. Synthetic surface base.
   1. The base surface shall meet the standards set by the Architect/Engineer and described in the product specifications.
   2. Allow minimum of 14 days cure on new asphalt, 28 days cure on new concrete prior to application of specified synthetic track surface.
   3. Repair work required on the base shall be approved by the Architect/Engineer.
   4. GC and/or Owner shall be responsible to protect the base from activities and traffic that may damage the base or leave dirt, oil or other foreign material on the base prior to application of the synthetic track surface.

C. Weather
   1. Apply the synthetic track surface only during favorable weather conditions.
   2. No application of the synthetic track surface shall be conducted during rainfall, when rain is imminent, when freezing temperatures are forecasted or exist, or when gusting winds are occurring.
   3. Work is to progress only when the SSC can guarantee successful cure of the materials.

D. During surface installation and striping, all irrigation systems shall be shut-off or controlled so that no water falls on the track or event areas.

E. During set-up, installation and striping, the GC and/or Owner shall be responsible to have the entire track and other pertinent areas closed and secured of all activities 24 hours per day until completion of the project.

1.7 WARRANTY

A. Manufacturer's and Installer's Warranty
   1. The warranty on the all-weather synthetic track surface shall endure for one (1) year from completion of installation.
   2. The warranty is to be provided directly by the SSC to the Owner.
   3. The warranty shall cover defects in materials and workmanship not deemed as ordinary wear on a running track.

.

B. Warranty Bond not required.

PART 2 – PRODUCTS

2.1 MANUFACTURERS

A. Beynon Sports Surfacing, 19495 SW Teton Ave., Tualatin, OR 97092,
   Tel: 503-691-2484, Fax: 503-692-0491, www.beynonsports.com

2.2 MATERIALS

A. Rubber
   1. Top-coat rubber shall be SBR granules with a 1.0-4.0mm gradation.
   2. SBR color shall be black

B. Binder
   1. Top-Coat primer shall be a polymer resin compatible with base course materials.
   2. Top-Coat binder shall be polymer resin containing a minimum of 50% solids.
   3. Polymer resin shall be pigmented black.

C. Marking and Line Paint
   1. The paint shall be formulated to be compatible with synthetic track surface materials.
   2. Colors shall be as prescribed or approved by the appropriate governing body; NFHS, NCAA, or IAAF.

PART 3 – EXECUTION

3.1 EXAMINATION

A. SSC shall examine project conditions to ensure successful installation of the synthetic track surface. Any deficiencies shall be reported to the GC and/or Owner for corrective action.

3.2 PREPARATION

B. SSC to protect adjacent areas from contamination of synthetic track surfacing materials due to installation procedures.

C. SSC shall prepare the base surface using a power blower to remove surface dirt. Cleaning necessary to remove embedded dirt, oil, or other foreign material shall be the responsibility of the GC and/or Owner.

3.3 INSTALLATION

A. General
   1. The Top-Coat shall be installed using the “rake and spray” method. “Batching” of rubber and binder, “wet spraying” binder and rubber, or other methods used to reduce the number of layers applied are not allowed.
   2. Top-Coat shall be installed in a minimum of three layers.
   3. Materials shall be applied in even layers with equipment specifically designed for the installation of resilient surfacing. Thorough curing between each layer is required before successive coats are applied.
   4. Top-Coat shall consist of a minimum quantity of 1.8 pounds per square yard of specified rubber granules and not less than 2.2 pounds per square yard of polymer resin.

B. Striping
   1. Striping Contractor shall verify with Owner’s representative the exact locations, size, shape, and color of the lines and markings before proceeding with striping and markings.
   2. Engineer the layout of lane lines, starting lines, and markings as prescribed or approved by the Owner’s representative, Architect/Engineer and the appropriate governing body; NFHS, NCAA, or IAAF.
   3. All lines and markings shall be spray applied by experienced personnel utilizing equipment manufactured for line striping. Striping lines and markings shall have true sharp edges.

3.4 CLEANING

A. Upon completion of work remove all containers, surplus materials, and installation debris.

B. Leave area of work in clean orderly condition ready for use by Owner.

02/11/09
Product Specifications\09T-C.doc

3.0 SURFACE PREPARATION

3.1 Prior to the application of surfacing materials, the entire surface should be flooded and checked for minor depressions or irregularities. Any puddled area covering a nickel shall be marked and repaired with Court Patch Binder. After patching, the asphalt surface shall not vary more than 1/8" in 10' measured in any direction.

4.0 CONSTRUCTION

Allow all patchwork to dry thoroughly. The surface to be coated must be sound, smooth and free from dust, dirt, or oily materials.

4.1 **Primer Coat** – A tack coat of must be applied over the entire surface at a rate of .04 gal./s.y. Allow to dry thoroughly.

4.2 **Track Surface** – Materials shall be applied to achieve a dense uniform surface of ½", in not less than six layers. The binder must be evenly distributed amongst the rubber granules upon the application of materials. Coverage rates:

Granule Color:	**Thickness:**	**Rubber Granules Weight:**	**Binder (Red):**
Black (SBR)	3/8" (9.5MM)	10.5 lbs./s.y.	.60 gal./s.y.
Red (EPDM)	½" (12.5MM)	5 lbs./s.y.	.27 gal./s.y.

Coverage rate based on undiluted product. Binder to rubber ratio shall be 1 gallon Polyresin binder per 18 lbs. of rubber granules.

To further enhance color depth, it is recommended to add 5 gallons of pigment to each 300 gallon tote of binder on the final spray coat. Pigment is a water-borne colorant.

The coverage rate for rubber granules is dependent on the specific gravity (density) of the rubber and the installation method of the surfacing system. Different densities will affect the dry bulking value of the rubber, which determines the weight per square yard for a specified thickness. The specific gravity for rubber particles can vary between colors, size, and manufacturers. It is recommended to consult the manufacturer for more information. Also, different application methods can affect the overall system density requiring lower or higher volumes of product. System weights and volumes shall be verified by on site sample methods.

4.3 **Top Coat** – Polyresin Coating shall be applied by approved spray equipment at a rate of not less than .10 gallons per square yard.

4.4 **Line striping** – Line paint shall be applied to meet all rules and regulations of the local track federation.

5.0 LIMITATIONS

- No part of the construction shall be conducted during rainfall or when rain is imminent.
- Allow 4-5 hours to cure at least 70F. Lower temperature and higher temperature will increase the drying time.
- Do not apply when surface temperature is above 130F.
- Apply only when ambient temperature is 50F and rising.
- Keep from freezing. Do not store in the hot sun.
- The Polyresin Track System will not prevent pavement cracks from occurring.
- Allow applications to thoroughly cure prior to subsequent applications.
- Use caution when applying materials near adjacent areas. Mask when necessary to prevent over spray.
- Allow new asphalt to cure for a minimum of 14 days.

6.0 PHYSICAL PROPERTIES

6.1 The polyresin binder is a high solids pigmented binder containing special fibers to promote strength. It is capable of drying/curing to a depth of 10mm in a single lift when mixed at the specified levels of 1-3mm rubber granules:

Viscosity > 90 ku or >1200 cps Pigment and Filler > 6% total formula

6.2 The polyresin coating is a fully pigmented acrylic topcoat system designed to have a high resistance to ultraviolet light. It is made from acrylic resins specifically designed for track surfaces to provide a tough, long lasting surface that can withstand the elements. It should be applied in 2 coats at a coverage rate of .05 gal./s.y. per coat.

6.3 **Rubber Properties**: 1-3mm Sieve Analysis – other sieve sizes may be used to achieve a different surface texture or force reduction characteristic; at the discretion of the owner and/or installer. Rubber supply can vary.

Mesh	**M.M.**	**% Retained**	Specific Gravity: Hardness: Shore A, 55-75 durometer
6	3.36	0-15%	Black Rubber Granules: 1.15-1.40
10	2.00	60-85%	Color EPDM Rubber Granules: 1.40-1.60
18	1.00	10-30%	
PAN 1.00	0-5%		

BSS 300RE
Seal Coat & Embedded Wear Layer Resurfacing
Synthetic Track Surfacing System Specifications

Part 1 – General

1.1 Scope

A. The synthetic surfacing contractor shall furnish all labor, materials, equipment, supervision, and services necessary for the proper completion of all **BSS 200RE Seal Coat & Embedded Wear Layer Resurfacing** and related work indicated on the drawings and specified herein.

B. The synthetic surfacing contractor shall refer to the drawings for the required locations of synthetic track surfacing to be installed. All quantities and dimensions shall be field verified by the synthetic surfacing contractor.

1.2 Specific Scope of Work

A. Install an impermeable polyurethane synthetic track system comprised of an impermeable layer (seal coat) of a two-component urethane, and topped with a poured-in-place, two-component U.V. stabilized elastomeric polyurethane wearing layer with an Embedded textured finish.

B. Layout and paint all track lines and event markings as required and specified by current IAAF and NCAA rules.

1.3 Coordination

A. The synthetic surfacing contractor shall coordinate the work specified with an authorized and appointed representative of the owner so as to perform the work during a period and in a manner acceptable to the owner.

Part 2 – Quality Assurance

2.1 Contractor and Manufacturer Qualifications

A. The CONTRACTOR and the MANUFACTURER must be the same.

B. The CONTRACTOR must have a minimum of 10 years' experience in the installation of poured-in-place, two-component elastomeric polyurethane synthetic track surfacing.

C. The CONTRACTOR shall be able to furnish evidence that they have been in business for a period of not less than 3 years, under the present name, and if required, furnish financial statements for each of the past 3 years.

D. The CONTRACTOR must have installed a minimum of 10 outdoor track facilities in the last 2 years using the exact, poured-in-place, two-component elastomeric polyurethane synthetic track resurfacing, as specified herein with the contractor bidding this project.

E. The MANUFACTURER must have a minimum of 10 years of experience with compound two-part polyurethane for athletic surfaces.

F. CONTRACTOR is to provide a list of completed facilities, minimum of 10 which are certified to meet IAAF/NCAA rules & regulations, utilizing the same product as specified.

G. The MANUFACTURER must offer a minimum of six (6) IAAF Certified Track Systems.

H. All polyurethane components must be MANUFACTURED in the United States in an ISO 9001:2008 Certified facility to ensure the highest quality materials.

I. The CONTRACTOR must have installed a minimum of two (2) Class I IAAF Certified outdoor tracks within the United States.

3.2 Submittals

The following submittals must be received with bid submittal:

A. Standard printed specifications of the synthetic track surfacing system to be installed on this project.

B. An affidavit attesting that the synthetic track surfacing material to be installed meets the requirements defined by the manufacturers currently published specifications and any modifications outlined in those technical specifications.

C. A synthetic track surfacing system sample, 12” x 12”in size, of the same synthetic track surfacing system to be installed on this project.

D. A list of completed facilities, including the installing supervisor, of the exact Dual Durometer synthetic track surfacing system

Part 3 – Materials

4.1 Elastomeric Polyurethane

A. BEYPUR, the two-component U.V. stabilized elastomeric polyurethane compounded from polyol and isocyanate components, based on one hundred percent (100%) Methylene Diphenyl Isocyanate (MDI). No Toluene Diisocyanate Isocyanate (TDI) will be allowed.

B. The elastomeric polyurethane shall be red in color.

4.2 EPDM Granulate

A. The EPDM granulates shall be approximately 1 to 3mm in size

B. The EPDM granulates and the U.V. stabilized elastomeric polyurethane shall be color matched.

4.3 Seal Coat

A. BEYPUR 200, the two-component polyurethane resin for this application, shall be pigmented to match the color of the wear coat. The material shall be applied by a squeegee to insure that the black mat is sealed.

4.4 Line Marking Paint

A. Manufacturers recommended pigmented line paint.

Part 4 – Installation

4.1 Surface Preparation

A. Prior to the application of the resurfacing layer, the existing polyurethane surface shall be inspected for conformity to planarity requirements. The surface shall not deviate more than 1/8 inch in 10 feet from the specified grade when checked with a 10-foot straightedge. An impermeable polyurethane surface may also be flooded with water to determine if any “bird baths” or low areas exist.

B. The owner should verify that the surface tolerances meet all specifications issued by the appropriate sanctioning or governing body such as IAAF, NCAA, NFSHSA, TAC, etc.

C. The area to be surfaced shall be clean and free of any loose or foreign particles (dirt, oil, etc.) prior to the commencement of work. The surface is usually cleaned by use of a power blower and high-pressure washer.

4.2 Thickness

A. The thickness of the **BSS 300RE Seal Coat & Embedded Wear Layer** shall be 5mm.

4.3 Equipment

A. The **BSS 300RE Seal Coat & Embedded Wear Layer Resurfacing** components shall be processed and installed by specially designed machinery and equipment. The wearing course shall be installed using automatic electronic portioning, which provides continuous mixing and feeding for an accurate, quality controlled installation.

4.4 Installation

A. Seal Coat

The two BEYPUR 200 components are mixed at the prescribed ratio homogeneously with a suitable mixing device. The coating is squeegee applied to the base mat, making it impermeable.

B. Wearing Course

The 1 to 3mm EPDM granules shall be integrated into the BEYPUR to achieve the full depth of the 5 mm wearing course. The resilient embedded textured finish shall be a dense matrix of exposed EPDM granules. The homogeneous wearing course shall be applied in situ with the base course.

4.5 Site Conditions

A. Installation shall not take place if adjacent or concurrent construction generates excessive dust, abrasives or any other by-product that, in the opinion of the installer, would be harmful to the track material, until completion of such works.

B. If, in the opinion of the installer of the synthetic material, the weather and/or climatic conditions are detrimental to the proper installation of the surfacing materials, work shall be delayed until conditions are acceptable. Preferred installation temperature is fifty degrees Fahrenheit and rising. Installation shall be executed only in dry conditions.

Part 5 – Line Striping and Event Markings

5.1 Layout

A. Line striping and event markings shall be laid out in accordance with current IAAF and NCAA rules.

5.2 Certification

A. Upon completion of the installation, the owner shall be supplied with all necessary computations and drawings as well as a letter of certification attesting to the accuracy of the markings.

Part 6 – Guarantee

A. Synthetic track surfacing system shall be fully guaranteed against faulty workmanship and material failure for a period of five (5) years from the date of acceptance.

B. Synthetic surfacing material found to be defective as a result of faulty workmanship and/or material failure shall be replaced or repaired at no charge, upon written notification within the guarantee period.

END OF SECTION

BSS 200RE
Seal Coat & Structural Spray Resurfacing
Synthetic Track Surfacing System Specifications

Part 1 – General

1.1 Scope

A. The synthetic surfacing contractor shall furnish all labor, materials, equipment, supervision, and services necessary for the proper completion of all **BSS 200RE Seal Coat & Structural Spray Resurfacing** and related work indicated on the drawings and specified herein.

B. The synthetic surfacing contractor shall refer to the drawings for the required locations of synthetic track surfacing to be installed. All quantities and dimensions shall be field verified by the synthetic surfacing contractor.

1.2 Specific Scope of Work

A. Install an impermeable polyurethane synthetic track system comprised of an impermeable layer (seal coat) of a two-component urethane, and topped with BEYPUR, a spray-applied coating of single-component polyurethane, and EPDM granules.

A. Layout and paint all track lines and event markings as required and specified by current IAAF and NCAA rules.

1.3 Coordination

A. The synthetic surfacing contractor shall coordinate the work specified with an authorized and appointed representative of the owner so as to perform the work during a period and in a manner acceptable to the owner.

Part 2 – Quality Assurance

2.1 Contractor and Manufacturer Qualifications

A. The CONTRACTOR and the MANUFACTURER must be the same.

B. The CONTRACTOR must have a minimum of 10 years' experience in the installation of poured-in-place, two-component elastomeric polyurethane synthetic track surfacing.

BEYNON
A Tarkett Sports Company

C. The CONTRACTOR shall be able to furnish evidence that they have been in business for a period of not less than 3 years, under the present name, and if required, furnish financial statements for each of the past 3 years.

D. The CONTRACTOR must have installed a minimum of 10 outdoor track facilities in the last 2 years using the exact, poured-in-place, two-component elastomeric polyurethane synthetic track resurfacing, as specified herein with the contractor bidding this project.

E. The MANUFACTURER must have a minimum of 10 years of experience with compound two-part polyurethane for athletic surfaces.

F. CONTRACTOR is to provide a list of completed facilities, minimum of 10 which are certified to meet IAAF/NCAA rules & regulations, utilizing the same product as specified.

G. The MANUFACTURER must offer a minimum of six (6) IAAF Certified Track Systems.

H. All polyurethane components must be MANUFACTURED in the United States in an ISO 9001:2008 Certified facility to ensure the highest quality materials.

I. The CONTRACTOR must have installed a minimum of two (2) Class I IAAF Certified outdoor tracks within the United States.

3.2 Submittals

The following submittals must be received with bid submittal:

A. Standard printed specifications of the synthetic track surfacing system to be installed on this project.

B. An affidavit attesting that the synthetic track surfacing material to be installed meets the requirements defined by the manufacturers currently published specifications and any modifications outlined in those technical specifications.

C. A synthetic track surfacing system sample, 12” x 12”in size, of the same synthetic track surfacing system to be installed on this project.

D. A list of completed facilities, including the installing supervisor, of the exact Dual Durometer synthetic track surfacing system

Part 3 – Materials

4.1 EPDM Granules

A. The rubber granules for the BEYPUR structural spray wearing coats shall be EPDM, synthetic rubber containing a minimum 20% EPDM resin, with a specific gravity of 1.5 $\pm$ 0.1 g/cm3. The EPDM rubber shall be the same color as chosen by the owner for the track surface.

4.2 Structural Spray Coating

A. The spray coating shall be BEYPUR, an MDI-based single-component, moisture cured, 100% solids, pigmented polyurethane, specifically formulated for compatibility with EPDM granules. The coating shall be the color specified by the owner. Pigment intergraded in the field shall not be allowed.

4.3 Seal Coat

A. BEYPUR 200, the two-component polyurethane resin for this application, shall be pigmented to match the color of the wear coat. The material shall be applied by a squeegee to insure that the black mat is sealed.

4.4 Line Marking Paint

A. Manufacturers recommended pigmented line paint.

Part 4 – Installation

4.1 Surface Preparation

A. Prior to the application of the resurfacing layer, the existing polyurethane surface shall be inspected for conformity to planarity requirements. The surface shall not deviate more than 1/8 inch in 10 feet from the specified grade when checked with a 10-foot straightedge. An impermeable polyurethane surface may also be flooded with water to determine if any “bird baths” or low areas exist.

B. The owner should verify that the surface tolerances meet all specifications issued by the appropriate sanctioning or governing body such as IAAF, NCAA, NFSHSA, TAC, etc.

C. The area to be surfaced shall be clean and free of any loose or foreign particles (dirt, oil, etc.) prior to the commencement of work. The surface is usually cleaned by use of a power blower and high-pressure washer.

4.2 Thickness

A. The thickness of the **BSS 200RE Seal Coat & Structural Spray** shall be 2-3mm.

4.3 Equipment

A. The **BSS 200RE Seal Coat & Structural Spray Resurfacing** components shall be processed and installed by specially designed machinery and equipment. The wearing course shall be installed using automatic electronic portioning, which provides continuous mixing and feeding for an accurate, quality controlled installation.

4.4 Installation

A. Seal Coat

The two BEYPUR 200 components are mixed at the prescribed ratio homogeneously with a suitable mixing device. The coating is squeegee applied to the base mat, making it impermeable.

B. Structural Spray Course

The 0.5 to 1.5 millimeter EPDM granules shall be mixed with BEYPUR, the single-component structural spray coating. The structural spray shall be made in two (2) uniform applications.

4.5 Site Conditions

B. Installation shall not take place if adjacent or concurrent construction generates excessive dust, abrasives or any other by-product that, in the opinion of the installer, would be harmful to the track material, until completion of such works.

C. If, in the opinion of the installer of the synthetic material, the weather and/or climatic conditions are detrimental to the proper installation of the surfacing materials, work shall be delayed until conditions are acceptable. Preferred installation temperature is fifty degrees Fahrenheit and rising. Installation shall be executed only in dry conditions.

Part 5 – Line Striping and Event Markings

5.1 Layout

A. Line striping and event markings shall be laid out in accordance with current IAAF and NCAA rules.

5.2 Certification

A. Upon completion of the installation, the owner shall be supplied with all necessary computations and drawings as well as a letter of certification attesting to the accuracy of the markings.

Part 6 – Guarantee

A. Synthetic track surfacing system shall be fully guaranteed against faulty workmanship and material failure for a period of five (5) years from the date of acceptance.

B. Synthetic surfacing material found to be defective as a result of faulty workmanship and/or material failure shall be replaced or repaired at no charge, upon written notification within the guarantee period.

END OF SECTION

BSS 200
Impermeable Basemat with Structural Spray
Synthetic Track Surfacing System Specifications

Part I - General

1.1 Scope

A. The synthetic surfacing contractor shall furnish all labor, materials, equipment, supervision, and services necessary for the proper completion of all **BSS 200** Synthetic Track Surfacing and related work indicated on the drawings and specified herein.

B. The synthetic surfacing contractor shall refer to the drawings for the required locations of synthetic track surfacing to be installed. All quantities and dimensions shall be field verified by the synthetic surfacing contractor.

1.2 Specific Scope of Work

A. Install an impermeable polyurethane synthetic track system comprised of a base layer of polyurethane bound SBR rubber granules, BEYPUR 200, an impermeable layer (seal coat) of a two-component urethane, and topped with BEYPUR, a spray-applied coating of single-component polyurethane, and EPDM granules.

B. Layout and paint all track lines and event markings as required and specified by current IAAF and NCAA rules.

1.3 Coordination

A. The synthetic surfacing contractor shall coordinate the work specified with an authorized and appointed representative of the owner so as to perform the work during a period and in a manner acceptable to the owner.

Part 2 - Codes and Standards

1.1 Applicable Publications

B. Codes and standards follow the current guidelines set forth by the International Amateur Athletic Federation (IAAF) and the National Collegiate Athletic Association (NCAA), along with the current material testing

BEYNON
A Tarkett Sports Company

guidelines as published by the American Society of Testing and Materials (ASTM).

2.2 Performance Standards

The **BSS 200** synthetic track surfacing system shall exhibit the following minimum performance standards (ASTM):

A.	Thickness:	(12-13mm) or as specified
B.	Force Reduction:	35-50%
C.	Vertical Deformation:	0.6mm-2.5mm
D.	Coefficient of Friction:	≥ 0.5 (47 TRRL Scale)
E.	Tensile Strength:	≥ 0.5 Mpa
F.	Elongation:	≥ 40%

Part 3 - Quality Assurance

3.1 Contractor and Manufacturer Qualifications

A. The CONTRACTOR and the MANUFACTURER must be the same.

B. The CONTRACTOR must have a minimum of 10 years experience in the installation of poured-in-place, two-component elastomeric polyurethane synthetic track surfacing.

C. The CONTRACTOR shall be able to furnish evidence that they have been in business for a period of not less than 3 years, under the present name, and if required, furnish financial statements for each of the past 3 years.

D. The CONTRACTOR must have installed a minimum of 10 outdoor track facilities in the last 2 years using the exact, IAAF certified, synthetic track surfacing, as specified herein with the contractor bidding this project.

E. The MANUFACTURER must have a minimum of 10 years of experience with compound two-part polyurethane for athletic surfaces.

F. The CONTRACTOR is required to provide documentation that shows the selected specified and installed product meets current IAAF Performance Standards for Synthetic Surfaced Athletics Tracks (Outdoor) and is certified in terms of the IAAF certification system as updated to present day.

G. CONTRACTOR is to provide a list of completed facilities, minimum of 10 which are certified to meet IAAF/NCAA rules & regulations, utilizing the same product as specified.

H. The MANUFACTURER must offer a minimum of seven (7) IAAF Certified Track Systems.

I. All polyurethane components must be MANUFACTURED in the United States in an **ISO 9001:2008 Certified** facility to ensure the highest quality materials.

J. The CONTRACTOR must have installed a minimum of three (3) Class I IAAF Certified outdoor tracks within the United States.

3.2 Submittals

The following submittals must be received with bid submittal:

A. Standard printed specifications of the synthetic track surfacing system to be installed on this project.

B. An affidavit attesting that the synthetic track surfacing material to be installed meets the requirements defined by the manufacturers currently published specifications and any modifications outlined in those technical specifications.

C. A synthetic track surfacing system sample, 12” x 12”in size, of the same synthetic track surfacing system to be installed on this project.

D. A list of completed facilities, including the installing supervisor, of the exact synthetic track surfacing system.

E. A current IAAF Certificate proving the product to be installed meets the current IAAF Performance Standards for Synthetic Surfaced Athletics Tracks (Outdoor).

Part 4 - Materials

4.1 Primers

A. Primers must be polyurethane-based, specifically formulated to be compatible with the paved SBR base and track surfacing material.

4.2 Black SBR Granules

A. The rubber granules for the base mat shall be recycled SBR rubber, processed and chopped to 1-3mm size, containing less than 1% dust.

4.3 EPDM Granules

A. The rubber granules for the BEYPUR structural spray wearing coats shall be EPDM, synthetic rubber containing a minimum 20% EPDM resin, with a specific gravity of 1.5 $\pm$ 0.1 g/cm3. The EPDM rubber shall be the same color as chosen by the owner for the track surface.

4.4 Polyurethane Binder

A. Binder for the black mat shall be BEYPUR, an MDI-based single-component, polyurethane binding agent. The binder shall not have a free TDI monomer level above 0.2% and must be solvent free. The binder must be specially formulated for compatibility with SBR rubber crumb.

4.5 Structural Spray Coating

A. The spray coating shall be BEYPUR, an MDI-based single-component, moisture cured, 100% solids, pigmented polyurethane, specifically formulated for compatibility with EPDM granules. The coating shall be the color specified by the owner. Pigment intergraded in the field shall not be allowed.

4.6 Seal Coat

A. BEYPUR 200, the two-component polyurethane resin for this application, shall be pigmented to match the color of the wear coat. The material shall be applied by a squeegee to insure that the black mat is sealed.

4.7 Line Marking Paint

A. All line and event markings shall be applied by experienced personnel the manufacturers recommended pigmented paint compatible with the synthetic track surfacing.

Part 5 - Installation

5.1 Subbase Requirements

A. Asphalt Compaction

a. The Synthetic Track Surfacing System shall be laid on an approved subbase. The General Contractor shall provide compaction test results of 92-96% for the installed subbase and asphalt surface.

b. For NCAA certification the following criteria must be followed. The track surface, i.e. asphalt substrate, shall not vary from planned cross slope by more than +/- 0.2%, with a maximum lateral slope outside to inside of 1%, and a maximum slope of 0.1% in any running direction. The finished asphalt shall not vary under a 10' straight edge more than 1/8".

c. It should be the responsibility of the asphalt-paving contractor to flood the surface immediately after the asphalt is capable of handling traffic. If, after 20 minutes of drying time, there are birdbaths evident, it shall be the responsibility of the architect, in conjunction with the surfacing contractor, to determine the method of correction. No cold tar patching, skin patching or sand mix patching will be acceptable.

B. Asphalt Quality

a. No Recycled Asphalt Pavement (RAP) shall be used in the wear course asphalt mix design as the inclusion of RAP as an off-set to virgin asphalt binder results in a brittle hot-mix asphalt (HMA) with significantly lower tensile strength and fatigue resistance. The sports surfacing contractor will not be held responsible for asphalt failures resulting from the inclusion RAP in the HMA mix design of the wear course.

b. Any oil spills (hydraulic, diesel, motor oil, etc.) must be completely removed, either by chipping out or removing and replacing with new, keyed in asphalt. The minimum depth of any asphalt replacement shall be one inch. The curing time for the asphalt base is 28 days. It shall be the responsibility of the surfacing contractor to determine if the asphalt substrate has cured sufficiently prior to the application of polyurethane surfacing system.

C. Responsibility of Others

a. It shall be the responsibility of the general contractor to determine if the asphalt substrate meets all design specifications, i.e. cross slopes, planarity and specific project criteria. After all the above conditions are met, the synthetic surfacing contractor must, in writing, accept the planarity of the asphalt receiving base, before work can commence.

5.2 Thickness

A. The thickness of the **BSS 200** Synthetic Track Surfacing System shall be 13mm.

5.3 Equipment

A. The **BSS 200** Synthetic Track Surfacing System components shall be processed and installed by specially designed machinery and equipment. A mechanically operated paver with variable regulated speed and thermostatically controlled screed shall be used in the installation of the base mat. The wearing course shall be installed using automatic electronic portioning, which provides continuous mixing and feeding for an accurate, quality controlled installation.

B. No hand mixing is allowed.

5.4 Installation

A. Base Course

The SBR granules and BEYPUR shall be mixed together on site to regulate the ratio/quantity of SBR, not to exceed 82% by weight in the base mat portion of the system. The BEYPUR shall be mixed with the SBR rubber so that a minimum of 20%, by weight, exists in the final mixture. This mixture is then mechanically installed using the paver.

B. Seal Coat

The two BEYPUR 200 components are mixed at the prescribed ratio homogeneously with a suitable mixing device. The coating is squeegee applied to the base mat, making it impermeable.

C. Wearing Course

The 0.5 to 1.5mm EPDM granules shall be mixed with BEYPUR, the single-component structural spray coating. The structural spray shall be made in two uniform applications.

5.5 Site Conditions

A. Installation shall not take place if adjacent or concurrent construction generates excessive dust, abrasives or any other by-product that, in the opinion of the installer, would be harmful to the track material, until completion of such works.

B. Apply Synthetic Track Surfacing in dry weather when pavement and atmospheric temperatures are fifty (50) degrees Fahrenheit or above, and are anticipated to remain above fifty (50) degrees Fahrenheit for twenty-four (24) hours after completing application.

C. The maximum temperature cannot exceed 105 degrees at any point during a 24 - hour period.

D. Rain cannot be falling. If there is a threat of rain, work shall cease until dry conditions can be re-established on the track pavement. Work is to proceed only when adequate curing can be guaranteed by the manufacturer.

Part 6 - Line Striping and Event Markings

6.1 Layout

A. Line striping and event markings shall be laid out in accordance with current IAAF and NCAA rules.

6.2 Certification

A. Upon completion of the installation, the owner shall be supplied with all necessary computations and drawings as well as a letter of certification attesting to the accuracy of the markings.

Part 7 - Guarantee

A. Synthetic track surfacing system shall be fully guaranteed against faulty workmanship and material failure for a period of five (5) years from the date of acceptance.

B. Synthetic surfacing material found to be defective as a result of faulty workmanship and/or material failure shall be replaced or repaired at no charge, upon written notification within the guarantee period

END OF SECTION

BEYNON
A Tarkett Sports Company

BSS 100
Basemat with Structural Spray
Synthetic Track Surfacing System Specifications

Part 1 – General

1.1 Scope

A. The synthetic surfacing contractor shall furnish all labor, materials, equipment, supervision, and services necessary for the proper completion of all **BSS 100** Synthetic Track Surfacing and related work indicated on the drawings and specified herein.

B. The synthetic surfacing contractor shall refer to the drawings for the required locations of synthetic track surfacing to be installed. All quantities and dimensions shall be field verified by the synthetic surfacing contractor.

1.2 Specific Scope of Work

A. Install an IAAF approved, porous polyurethane synthetic track system comprised of a base layer of polyurethane-bound SBR granules and topped with BEYPUR, a single-component polyurethane structural spray, and EPDM granules.

B. Layout and paint all track lines and event markings as required and specified by current IAAF and NCAA rules.

1.3 Coordination

A. The synthetic surfacing contractor shall coordinate the work specified with an authorized and appointed representative of the owner so as to perform the work during a period and in a manner acceptable to the owner.

Part 2 – Codes and Standards

2.1 Applicable Publications

A. Codes and standards follow the current guidelines set forth by the International Amateur Athletic Federation (IAAF) and the National Collegiate Athletic Association (NCAA), along with the current material testing guidelines as published by the American Society of Testing and Materials (ASTM).

BEYNON
A Tarkett Sports Company

2.2 Performance Standards

The **BSS 100** Track Surfacing System shall exhibit the following minimum performance standards as required by IAAF:

A.	Thickness:	12-13mm or as specified
B.	Force Reduction:	35 to 50%
C.	Vertical Deformation:	0.6 to 2.5mm
D.	Friction:	≥ 0.5 (47 TRRL Scale)
E.	Tensile Strength:	≥ 0.4 MPa
F.	Elongation at Break:	≥ 40%

Part 3 – Quality Assurance

3.1 Contractor and Manufacturer Qualifications

A. The CONTRACTOR and the MANUFACTURER must be the same.

B. The CONTRACTOR must have a minimum of 10 years experience in the installation of poured-in-place, two-component elastomeric polyurethane synthetic track surfacing.

C. The CONTRACTOR shall be able to furnish evidence that they have been in business for a period of not less than 3 years, under the present name, and if required, furnish financial statements for each of the past 3 years.

D. The CONTRACTOR must have installed a minimum of 10 outdoor track facilities in the last 2 years using the exact, IAAF certified, synthetic track surfacing, as specified herein with the contractor bidding this project.

E. The MANUFACTURER must have a minimum of 10 years of experience with compound two-part polyurethane for athletic surfaces.

F. The CONTRACTOR is required to provide documentation that shows the selected specified and installed product meets current IAAF Performance Standards for Synthetic Surfaced Athletics Tracks (Outdoor) and is certified in terms of the IAAF certification system as updated to present day.

G. CONTRACTOR is to provide a list of completed facilities, minimum of 10 which are certified to meet IAAF/NCAA rules & regulations, utilizing the same product as specified.

H. The MANUFACTURER must offer a minimum of seven (7) IAAF Certified Track Systems.

I. All polyurethane components must be MANUFACTURED in the United States in an **ISO 9001:2008 Certified** facility to ensure the highest quality materials.

J. The CONTRACTOR must have installed a minimum of three (3) Class I IAAF Certified outdoor tracks within the United States.

3.2 Submittals

The following submittals must be received with bid submittal:

A. Standard printed specifications of the synthetic track surfacing system to be installed on this project.

B. An affidavit attesting that the synthetic track surfacing material to be installed meets the requirements defined by the manufacturers currently published specifications and any modifications outlined in those technical specifications.

C. A synthetic track surfacing system sample, 12” x 12”in size, of the same synthetic track surfacing system to be installed on this project.

D. A list of completed facilities, including the installing supervisor, of the exact synthetic track surfacing system.

E. A current IAAF Certificate proving the product to be installed meets the current IAAF Performance Standards for Synthetic Surfaced Athletics Tracks (Outdoor).

Part 4 – Materials

4.1 Primers

A. Primers shall be BEYPRIM, a polyurethane-based primer specifically formulated to be compatible with the paved-in-place SBR granules and BEYPUR track surfacing material.

4.2 Black SBR Granules

A. The rubber granules for the base mat shall be recycled SBR rubber, processed and chopped to 1-3mm size, containing less than 1% dust.

4.3 EPDM Granules

A. The rubber granules for the BEYPUR structural spray wearing coats shall be EPDM, synthetic rubber containing a minimum 20% EPDM resin, with a specific gravity of 1.5 ± 0.1 g/cm3. The EPDM rubber shall be the same color as chosen by the owner for the track surface.

4.4 Polyurethane Binder

A. Binder for the black mat shall be BEYPUR, an MDI-based single-component, polyurethane binding agent. The binder shall not have a free TDI monomer level above 0.2% and must be solvent free. The binder must be specially formulated for compatibility with SBR rubber crumb.

4.5 Structural Spray Coating

A. The spray coating shall be BEYPUR, an MDI-based single-component, moisture cured, 100% solids, and pigmented polyurethane, specifically formulated for compatibility with EPDM granules. The coating shall be the color specified by the owner. Pigment intergraded in the field shall not be allowed.

4.6 Line Marking Paint

A. All line and event markings shall be applied by experienced personnel utilizing the manufacturers' recommended pigmented paint compatible with the BSS 100 Track Surfacing material.

Part 5 – Installation

5.1 Subbase Requirements

A. Asphalt Compaction

a. The Synthetic Track Surfacing System shall be laid on an approved subbase. The General Contractor shall provide compaction test results of 92-96% for the installed subbase and asphalt surface.

b. For NCAA certification the following criteria must be followed. The track surface, i.e. asphalt substrate, shall not vary from planned cross slope by more than +/- 0.2%, with a maximum lateral slope outside to inside of 1%,

and a maximum slope of 0.1% in any running direction. The finished asphalt shall not vary under a 10' straight edge more than 1/8”.

c. It should be the responsibility of the asphalt-paving contractor to flood the surface immediately after the asphalt is capable of handling traffic. If, after 20 minutes of drying time, there are birdbaths evident, it shall be the responsibility of the architect, in conjunction with the surfacing contractor, to determine the method of correction. No cold tar patching, skin patching or sand mix patching will be acceptable.

B. Asphalt Quality

a. No Recycled Asphalt Pavement (RAP) shall be used in the wear course asphalt mix design as the inclusion of RAP as an off-set to virgin asphalt binder results in a brittle hot-mix asphalt (HMA) with significantly lower tensile strength and fatigue resistance. The sports surfacing contractor will not be held responsible for asphalt failures resulting from the inclusion RAP in the HMA mix design of the wear course.

b. Any oil spills (hydraulic, diesel, motor oil, etc.) must be completely removed, either by chipping out or removing and replacing with new, keyed in asphalt. The minimum depth of any asphalt replacement shall be one inch. The curing time for the asphalt base is 28 days. It shall be the responsibility of the surfacing contractor to determine if the asphalt substrate has cured sufficiently prior to the application of polyurethane surfacing system.

C. Responsibility of Others

a. It shall be the responsibility of the general contractor to determine if the asphalt substrate meets all design specifications, i.e. cross slopes, planarity and specific project criteria. After all the above conditions are met, the synthetic surfacing contractor must, in writing, accept the planarity of the asphalt receiving base, before work can commence.

5.2 Thickness

A. The thickness of the **BSS 100** Synthetic Track Surfacing System shall be 13mm.

5.3 Equipment

A. The **BSS 100** Synthetic Track Surfacing System components shall be processed and installed by specially designed machinery and equipment. A mechanically operated paver with variable regulated speed and thermostatically controlled screed shall be used in the installation of the base mat. The wearing course shall be installed using automatic electronic portioning, which provides continuous mixing and feeding for an accurate, quality controlled installation.

B. No hand mixing is allowed.

5.4 Installation

A. Base Course

The SBR granules and BEYPUR shall be mixed together on site to regulate the ratio/quantity of SBR, not to exceed 82% by weight in the base mat portion of the system. The single component polyurethane binder shall be mixed with the SBR rubber so that a minimum of 20%, by weight, exists in the final mixture. This mixture is then mechanically installed using the paver.

B. Wearing Course

The 0.5 to 1.5 millimeter EPDM granules shall be mixed with BEYPUR, the single-component structural spray coating. The structural spray shall be made in two (2) uniform applications.

5.5 Site Conditions

A. Installation shall not take place if adjacent or concurrent construction generates excessive dust, abrasives or any other by-product that, in the opinion of the installer, would be harmful to the track material, until completion of such works.

C. Apply Synthetic Track Surfacing in dry weather when pavement and atmospheric temperatures are fifty (50) degrees Fahrenheit or above, and are anticipated to remain above fifty (50) degrees Fahrenheit for twenty-four (24) hours after completing application.

D. The maximum temperature cannot exceed 105 degrees at any point during a 24 hour period.

E. Rain cannot be falling. If there is a threat of rain, work shall cease until dry conditions can be re-established on the track pavement. Work is to proceed only when adequate curing can be guaranteed by the manufacturer.

BEYNON
A Tarkett Sports Company

Part 6 – Line Striping and Event Markings

6.1 Layout

A. Line striping and event markings shall be laid out in accordance with current IAAF and NCAA rules.

6.2 Certification

A. Upon completion of the installation, the owner shall be supplied with all necessary computations and drawings, as well as a letter of certification attesting to the accuracy of the markings.

Part 7 – Guarantee

A. The BSS 100 Track Surfacing System shall be fully guaranteed against faulty workmanship and material failure for a period of five (5) years from the date of acceptance. The warranty coverage shall not be prorated nor limited by the amount of usage.

B. Synthetic surfacing material found to be defective as a result of faulty workmanship and/or material failure shall be replaced or repaired at no charge, upon written notification within the guarantee period.

END OF SECTION

7.0 QUALITY ASSURANCE:

Installer shall be a member in good standing of the American Sports Builders Association (ASBA), with specific qualifications in building and surfacing running tracks. Installer must employ a Certified Track Builder (CTB) as conferred by the ASBA. Approved installer must have remained in business under the same business name for double the length of the warrantee period.

8.0 DISCLAIMER:

Suggestions for use of our product or inclusion of descriptive material from patents should not be understood as recommending the use of our product in violation of any patents.

9.0 GENERAL:

Materials must be specifically designed for the construction of running track surfaces. Materials specified shall be delivered to the site in sealed drums or totes. Minimal addition of clear, fresh water at the job site is dependent on temperature and material flow. Coverage rates are based upon material prior to mixing with water. Dispose of empty containers in accordance with local, state and federal regulations.

A Division of California Products • An Employee Owned Company
150 Dascomb Road, Andover Massachusetts 01810 USA
Phone: 978-623-9980 / 800-225-1141 • Fax: 978-623-9960
www.plexipave.com • info@plexipave.com

SECTION 10.3

SITE IMPROVEMENTS
ATHLETIC FACILITIES

EXTERIOR/INTERIOR LATEX TYPE RUBBER-FILLED

PLEXICUSHION®

DESCRIPTION:
Plexicushion is a resilient, asbestos-free 100% latex cushion subsurface for the Plexipave Color Finish. Plexicushion can be used alone to add cushion to a standard hard surface or it may be used over Plexicushion Base Coat to add cushion and to provide a uniform surface to receive the Plexipave Color System. Plexicushion may be applied on both indoor and outdoor asphalt and indoor and outdoor concrete. Application over outdoor concrete requires that a proper vapor barrier has been installed under the slab and appropriate perimeter drainage is in place.

SURFACE USES:
- Tennis Courts
- Basketball Courts
- Playground Areas
- Field Houses
- Jogging Tracks

APPLICATION:
- 50 Durometer flexible rubber squeegee.

DRYING TIME:
Dependent on the ambient temperatures and humidity;

- 60°F and rising – 2-4 hours dry time @ 50% relative humidity.
- 70°F and rising – 1-2 hours dry time @ 50% relative humidity.
- Indoor application – 8 hour dry time with good heat ventilation (1 coat per day recommended)

COLOR:
Bluish

COVERAGE:
Over Asphalt or Concrete:
- 4 coats - .1-.11 gallons per square yard per coat (9-10s.y. / gal/coat)

Over Plexicushion Base Coat:
- 1st Coat - .16 gallons per square yard (6-7s.y. / gal.)
- 2nd Coat - .10-.11 gallons per square yard (9-10s.y. / gal.)
- 3rd Coat (if specified) - .10-.11 gallons per square yard (9-10s.y. / gal.)

LIMITATIONS:
- The Plexicushion system will not prevent substrate cracks from occurring and reoccurring.
- Allow each application to dry thoroughly before subsequent applications.
- Do not apply if surface temperature is less than 60° F or more than 140°F.
- Do not apply over tar based emulsion sealers
- Allow asphalt to cure for a minimum of 14 days in summer conditions.
- Allow concrete to cure for a minimum of 28 days in summer conditions
- Do not use curing agents on concrete surfaces.
- Apply only when ambient temperature is 60° F and rising.
- Do not apply when rain is imminent.
- Used mixed material promptly after diluting with water.
- Outdoor concrete MUST have a vapor barrier in place underneath the concrete.
- Keep containers tightly closed when not in use.
- DO NOT STORE IN HOT SUN.
- KEEP FROM FREEZING.

SPECIFICATION
PLEXICUSHION
RESILIENT UNDERLAYMENT

1.0 SCOPE

1.1 This specification pertains to the application of Fortified Plexicushion over tennis courts and other recreational areas as designated in the site plans. The material shall be for use over indoor and outdoor asphalt, indoor concrete and outdoor concrete with a proper vapor barrier in place. Application shall be equally durable on each of the specified substrate conditions.

1.2 The work shall consist of suitable cleaning and preparation of the asphalt or concrete to assure a satisfactory bond of Plexicushion to the substrate.

2.0 DESCRIPTION

The asphalt (or concrete) surface to receive the Plexicushion System shall be clean, sound, and free of grease, oils and other foreign materials. All ridges, cracks and birdbaths shall be filled and leveled with Court Patch Binder according to specifications 10.14. Surfaces shall have a slope of 1" in 10', all in one plane, and variations shall not exceed 1/8th" in ten feet measured in any direction when measured with a 10' straight edge.

2.1 Asphalt—Allow asphalt to cure for a minimum of 14 days. Proceed with patches as specified above. Allow all patch work to dry and apply one coat of Acrylic Resurfacer to provide a uniform underlayment according to specification Section 10.8.

2.2 Concrete—The concrete surface shall have a wood floor or light broom finish. DO NOT PROVIDE A STEEL TROWEL FINISH. DO NOT ALLOW ANY CURING AGENTS OR HARDNERS TO BE USED. Acid etch concrete with Concrete Preparer according to specification 10.13.

Proceed with patching as specified above. Allow all patch work to dry and prime the surface with California Ti-Coat according to specification 10.17 Acrylic Resurfacer must be applied within 1-3 hours after Ti-Coat application and while the material is dry but still tacky to the touch.

3.0 PLEXICUSHION

Plexicushion Club	Plexicushion Tournament	Plexicushion Prestige
1 coat of Acrylic Resurfacer	1 coat of Acrylic Resurfacer	1 coat of Acrylic Resurfacer
4 coats of Plexicushion	2 coats of Plexicushion Base Coat	3 Coats of Plexicushion Base Coat
Plexipave Color System	3 coats of Plexicushion	3 coats of Plexicushion
	Plexipave Color System	Plexipave Color System

4.0 APPLICATION

4.1 Plexicushion should be diluted with one (1) part water to four (4) parts Plexicushion to improve flowability. When applying in extremely warm climatic conditions or when using an approved mechanical sprayer, the material may be applied at one (1) part water to three (3) parts Plexicushion. The Plexicushion shall be thoroughly mixed at the job site.

4.2 Plexicushion is applied (in a similar manner to Plexipave) in windrows on the surface with sufficient quantity to cover as the squeegee is pulled over the surface. Apply only light pressure to the squeegee. Do not allow ridges to form between passes of the squeegee. Any ridges existing after this material has dried can be removed by rubbing with a mason stone or heavy sand paper.

4.3 Plexicushion applications should be allowed to thoroughly dry prior to application of subsequent coats. Indoor applications will require more drying time with proper heat and ventilation.

5.0 GENERAL

5.1 The contractor shall remove all containers, surplus materials and debris upon completion of work leaving the site in a clean, orderly condition that is acceptable to the owner. Gates shall be secured and all containers shall be disposed of in accordance with Local, State and Federal regulations.

5.2 Materials specified for the Plexicushion System shall be delivered to the site in sealed, properly labeled drums with California Products Corporation labels that are stenciled with proper batch code numbers. Products packaged or labeled in any other manner will not be accepted. Mixing with clear, fresh water shall only be done at the job site. Coverage rates are based upon material prior to mixing with water as specified.

E-LAYER (25mm)

Product Specifications

PART 1 – GENERAL

1.1 SUMMARY

A. Product Name: E-Layer.

B. Product Description: Pour-in-place, permeable, synthetic field surface base consisting of rubber granules, gravel aggregate and polyurethane binder.

C. Scope of Work: Furnish all required labor, materials and equipment to successfully install the specified synthetic field surface base.

1.2 RELATED WORK

A. Earthwork
B. Drainage
C. Asphaltic Concrete Paving
D. Cast-in-Place Concrete
E. Synthetic Turf

1.3 REFERENCE STANDARDS

A. The work shall conform to the standards for field construction as prescribed or approved by the appropriate governing body; NFHS, NCAA, or IAAF.

1.4 SUBMITTALS

A. Product Data
B. Warranty

1.5 QUALITY ASSURANCE

A. Synthetic surfacing contractor (SSC) shall be licensed and bonded and possess a valid contractor's license in the state where Work is performed.

B. SSC shall have a minimum of 5 years experience installing the specified permeable base surface under the same corporate name as current operations.

1.6 PROJECT CONDITIONS

A. SSC, General Contractor (GC) and/or Owner, shall conduct a pre-construction meeting to review project conditions prior to dispatch of the SSC's installation team.

B. Permeable Surface Sub-Base.
   1. The field sub-base shall meet the standards set by the Architect/Engineer and described in the product specifications.
   2. Repair work required on the base shall be approved by the Architect/Engineer.
   3. GC and/or Owner shall be responsible to protect the field sub-base from activities and traffic that may damage the sub-base prior to application.

C. Weather
   1. Apply the permeable field base surface only during favorable weather conditions.
   2. No application of the permeable field base surface shall be conducted during rainfall, when rain is imminent, when freezing temperatures are forecasted or exist, or when gusting winds are occurring.
   3. Work is to progress only when the SSC can guarantee successful cure of the materials.

D. During field base surface installation, all irrigation systems shall be shut-off or controlled so that no water falls on the field areas.

E. During set-up and installation, the GC and/or Owner shall be responsible to have the entire field and other pertinent areas closed and secured of all activities 24 hours per day until completion of the project.

1.7 WARRANTY

A. Manufacturer's and Installer's Warranty
   1. The warranty on the permeable base surface shall endure for eight (8) years from completion of installation.
   2. The warranty is to be provided directly by the SSC to the Owner.
   3. The warranty shall cover defects in materials and workmanship not deemed as ordinary wear on a synthetic field.

.

B. Warranty Bond not required.

PART 2 – PRODUCTS

2.1 MANUFACTURERS

A. Beynon Sports Surfaces, Inc., 19600 SW 129th Ave., Ste A, Tualatin, OR 97092, Tel: 503-691-2484, Fax: 503-692-0491, www.beynonsports.com

2.2 MATERIALS

A. Aggregate
   1. Birds Eye Pea Gravel with a 3.0-6.0mm gradation.
   2. Pea gravel shall be clean, washed and dry.
B. Rubber
   1. SBR granules with a 1.0-5.0mm gradation.
C. Binder
   1. Permeable base binder shall be polyurethane moisture cure, MDI based, 100% solids.

PART 3 – EXECUTION

3.1 EXAMINATION

A. SSC shall examine project conditions to ensure successful installation of the permeable field base surface. Any deficiencies shall be reported to the GC and/or Owner for corrective action.

3.2 PREPARATION

B. SSC to protect adjacent areas from contamination of permeable field base surfacing materials due to installation procedures.

3.3 INSTALLATION

A. Permeable Field Surface Base
   1. The permeable field surface base will be applied to a minimum depth of 25 mm.
   2. The permeable surface base shall consist of 6% binder, 47% rubber granule and 47% aggregate, by weight.
   3. The materials shall be prepared in a mechanical mixer, to assure complete coverage of each particle by the binding agent, and mixed until a homogenous mixture is obtained.
   4. Mixed materials shall be applied to the field sub-base surface by a mechanically operated finishing machine which shall have an electrically heated screed.

3.4 CLEANING

A. Upon completion of work remove all containers, surplus materials, and installation debris.

B. Leave area of work in clean orderly condition ready for synthetic field application.

STRUCTURAL SPRAY
Product Specifications

PART 1 – GENERAL

1.1 SUMMARY

A. Product Name: Structural Spray.

B. Product Description: Pour-in-place, all-weather synthetic track re-surface consisting of structural spray coatings of pigmented polyurethane and rubber.

C. Scope of Work: Furnish all required labor, materials and equipment to successfully install the specified all-weather synthetic track surface including striping and markings.

1.2 RELATED WORK

A. Earthwork
B. Drainage
C. Asphaltic Concrete Paving
D. Cast-in-Place Concrete
E. Synthetic Turf

1.3 REFERENCE STANDARDS

A. The work shall conform to the standards for track construction as prescribed or approved by the appropriate governing body; NFHS, NCAA, or IAAF.
   1. NFSHSA *Track and Field Rules.*
   2. ASBA *Running Tracks Construction and Maintenance Manual.*

1.4 SUBMITTALS

A. Product Data
B. Striping Diagram
C. Operation and Maintenance Manual
D. Warranty

1.5 QUALITY ASSURANCE

A. Synthetic surfacing contractor (SSC) shall be licensed and bonded and possess a valid contractor's license in the state where Work is performed.

B. SSC shall have a minimum of 5 years experience installing the specified all-weather track surface under the same corporate name as current operations.

1.6 PROJECT CONDITIONS

A. SSC, General Contractor (GC) and/or Owner, shall conduct a pre-construction meeting to review project conditions prior to dispatch of the SSC's installation team.

B. Synthetic surface base.
   1. The base surface shall meet the standards set by the Architect/Engineer and described in the product specifications.
   2. Allow minimum of 14 days cure on new asphalt, 28 days cure on new concrete prior to application of specified synthetic track surface.
   3. Repair work required on the base shall be approved by the Architect/Engineer.
   4. GC and/or Owner shall be responsible to protect the base from activities and traffic that may damage the base or leave dirt, oil or other foreign material on the base prior to application of the synthetic track surface.

C. Weather
   1. Apply the synthetic track surface only during favorable weather conditions.
   2. No application of the synthetic track surface shall be conducted during rainfall, when rain is imminent, when freezing temperatures are forecasted or exist, or when gusting winds are occurring.
   3. Work is to progress only when the SSC can guarantee successful cure of the materials.

D. During surface installation and striping, all irrigation systems shall be shut-off or controlled so that no water falls on the track or event areas.

E. During set-up, installation and striping, the GC and/or Owner shall be responsible to have the entire track and other pertinent areas closed and secured of all activities 24 hours per day until completion of the project.

1.7 WARRANTY

A. Manufacturer's and Installer's Warranty
   1. The warranty on the all-weather synthetic track surface shall endure for one (1) years from completion of installation.
   2. The warranty is to be provided directly by the SSC to the Owner.
   3. The warranty shall cover defects in materials and workmanship not deemed as ordinary wear on a running track.

.

B. Warranty Bond not required.

PART 2 – PRODUCTS

2.1 MANUFACTURERS

A. Beynon Sports Surfaces, Inc., 19600 SW 129th Ave. Ste A, Tualatin, OR 97092, Tel: 503-691-2484, Fax: 503-692-0491, www.beynonsports.com

2.2 MATERIALS

A. Rubber
   1. Structural spray rubber shall be EPDM with a 0.5-1.5mm gradation. Color shall be red.

B. Binder
   1. Structural spray primer shall be polyurethane compatible with coating materials.
   2. Structural spray binder shall be polyurethane highly pigmented, meeting all EPA VOC requirements. Color shall be red

C. Marking and Line Paint
   1. The paint shall be formulated to be compatible with synthetic track surface materials.
   2. Colors shall be as prescribed or approved by the appropriate governing body; NFHS, NCAA, or IAAF.

PART 3 – EXECUTION

3.1 EXAMINATION

A. SSC shall examine project conditions to ensure successful installation of the synthetic track surface. Any deficiencies shall be reported to the GC and/or Owner for corrective action.

3.2 PREPARATION

B. SSC to protect adjacent areas from contamination of synthetic track surfacing materials due to installation procedures.

C. SSC shall prepare the base surface using a power blower to remove surface dirt. Cleaning necessary to remove embedded dirt, oil, or other foreign material shall be the responsibility of the GC and/or Owner.

3.3 INSTALLATION

A. Primer
   1. Apply solid pour primer uniformly at a rate of not less than 0.3 pounds per square yard of the synthetic track surface area.
   2. Allow a minimum of 30 minutes cure before application of the base mat materials.

B. Structural Spray
   1. The entire surface area shall receive a structural spray consisting 60 parts structural spray binder and 40 parts structural spray rubber granules, by weight.
   2. The structural spray shall be applied in a minimum of two layers using equipment specifically designed for the application of synthetic track surfaces.
   3. Each structural spray layer shall be applied uniformly at a minimum rate of 1.8 pounds per square yard; for total spray coverage of not less than 3.6 pounds per square yard.
   4. The two layers shall be sprayed in opposite directions in order to achieve a uniform application.

C. Striping
   1. Striping Contractor shall verify with Owner's representative the exact locations, size, shape, and color of the lines and markings before proceeding with striping and markings.
   2. Engineer the layout of lane lines, starting lines, and markings as prescribed or approved by the Owner's representative, Architect/Engineer and the appropriate governing body; NFHS, NCAA, or IAAF.
   3. All lines and markings shall be spray applied by experienced personnel utilizing equipment manufactured for line striping. Striping lines and markings shall have true sharp edges.
   4. SSC shall provide a detailed drawing to the Owner clearly identifying color codes and locations of lines and markings.

3.4 CLEANING

A. Upon completion of work remove all containers, surplus materials, and installation debris.

B. Leave area of work in clean orderly condition ready for use by Owner.

FOR TRACKS THAT LEAVE NO FOOTPRINT.

(ON THE ENVIRONMENT)

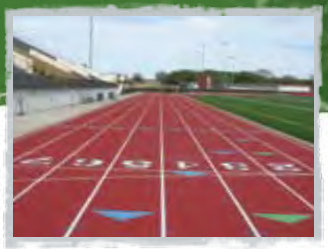

BEYPUR 160 WATER-BASED STRUCTURAL SPRAY

A superb polyurethane spray coating for use in the application of texturing layers with no free isocyanate. Made without harmful chemicals, it's ideal for use around turf fields and enclosed areas. BEYPUR 160. The best way to improve times and the environment.

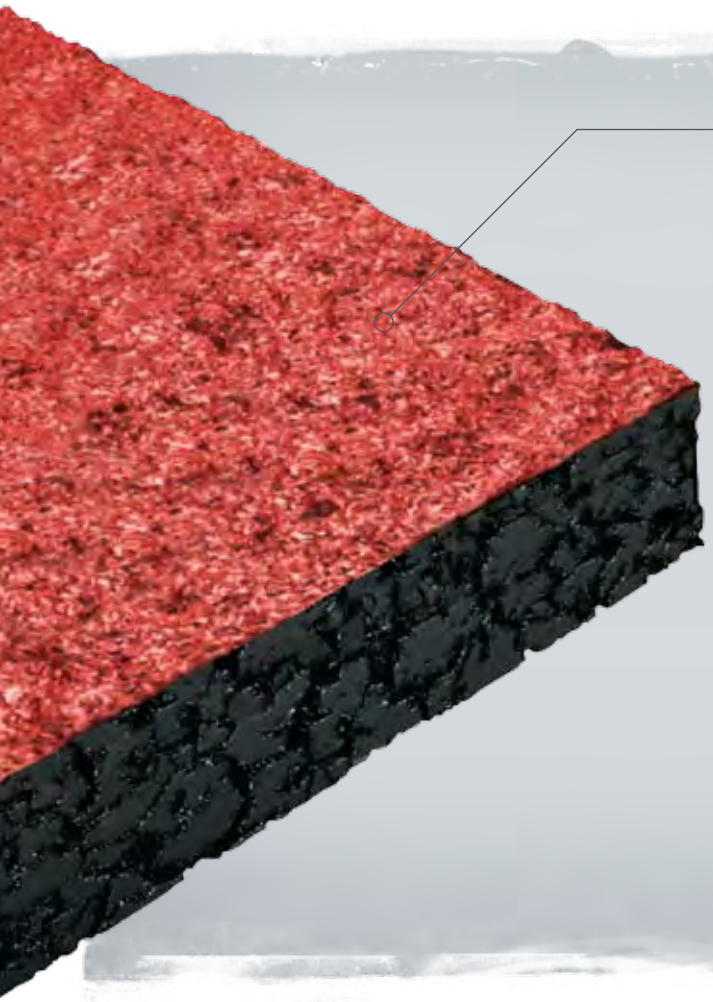

- *Low to zero VOCs and absence of isocyanates, hence, reduced chemical exposure to employees and citizens*
- *Water wash up of equipment versus harmful solvents*
- *Easy disposal — dry out and toss in most cases*
- *Reduced hazardous waste and environmental liabilities*
- *Ships as a non-hazardous product*
- *Reduced odors due to the absence of solvents and isocyanates*
- *Faster dry times allow for more efficient applications. In most cases, two spray applications in one day are achievable*
- *Low overspray allows for less prep work and issues with clean up after application*
- *Excellent color retention*

BEYNON SPORTS SURFACES
A TARKETT SPORTS COMPANY

BEYNON SPORTS SURFACES | 16 ALT ROAD | HUNT VALLEY, MARYLAND 21030 | 410.771.9473 | WWW.BEYNONSPORTS.COM

1046_BSS_Marketing_Sheet_v4.indd 2 4/16/09 1:44:56 PM

Bidder: Fieldturf USA, Inc.
G.3
1 yr warranty

BLACK POLYRESIN TRACK RESURFACING SYSTEM

1.0 DESCRIPTION

This specification covers the installation of a high performance resilient track resurfacing system for existing polyresin surfaces. This track system utilizes specially compounded, pigmented, water-based binders and SBR rubber granules to provide strength, flexibility and to prevent ultra violet degradation. Multiple topcoats are applied to further protect against harmful UV rays and to reduce wear. The system provides a durable, resilient, spike resistant surface for recreational and competitive use.

NOTE: The success of the running track surface is dependent on a sound base (with good drainage) and the asphalt concrete meeting the requirements of The National Asphalt Paving Association and the American Sports Builders Association. Variations of the existing asphalt subsurface should not exceed 1/8" in 10' when measured in any direction with a straightedge.

2.0 MATERIALS – All liquid products shall be supplied by one manufacturer.

2.1 **Court Patch Binder**

2.2 **Latex tack coat**

2.3 **Polyresin Binder** – (Black).

2.4 **EPDM Granules** – Select granules for top layers approved by the manufacturer. (Black)

2.5 P**olyresin Coating** – (Black).

2.6 **Line Paint**

2.7 **Pigment** – Water-borne pigment for enhanced color depth (Black).

2.8 **Water** – The water used in all mixtures shall be fresh and potable.

3.0 SURFACE PREPARATION

3.1 Prior to the application of resurfacing materials; repair torn, delaminated or overly worn areas using a mixture of rubber granules and polyurethane binder.

3.2 Clean existing surface using soft-bristle brooms, power blowers and pressure washer (when necessary).

4.0 CONSTRUCTION

Allow all patchwork to cure thoroughly. The surface to be coated must be sound, smooth and free from dust, dirt, or oily materials.

4.1 **Primer Coat** – A tack coat of must be applied over the entire surface at a rate of .04 gal./s.y. Allow to dry thoroughly.

4.2 **Track Resurface** – Rubber granules shall be applied evenly at a rate of 5lbs per square yard in 2 layers. Each layer will be sprayed with pigmented polyresin binder at a rate of 1 gallon of binder per 18 lbs of epdm rubber granules.

To further enhance color depth, it is recommended to add 5 gallons of pigment to each 300 gallon tote of binder on the final spray coat. Pigment is a water-borne colorant.

The coverage rate for rubber granules is dependent on the specific gravity (density) of the rubber and the installation method of the surfacing system. Different densities will affect the dry bulking value of the rubber, which determines the weight per square yard for a specified thickness. The specific gravity for rubber particles can vary between colors, size, and manufacturers. It is recommended to consult the manufacturer for more information. Also, different application methods can affect the overall system density requiring lower or higher volumes of product. System weights and volumes shall be verified by on site sample methods.

4.3 **Top Coat** – Polyresin Coating shall be applied by approved spray equipment at a rate of not less than .10 gallons per square yard.

4.4 **Line striping** – Line paint shall be applied to meet all rules and regulations of the local track federation.

5.0 LIMITATIONS

- No part of the construction shall be conducted during rainfall or when rain is imminent.
- Allow 4-5 hours to cure at least 70F. Lower temperature and higher temperature will increase the drying time.
- Do not apply when surface temperature is above 130F.
- Apply only when ambient temperature is 50F and rising.
- Keep from freezing. Do not store in the hot sun.

- The Polyresin Track System will not prevent pavement cracks from occurring.
- Allow applications to thoroughly cure prior to subsequent applications.
- Use caution when applying materials near adjacent areas. Mask when necessary to prevent over spray.
- Allow new asphalt to cure for a minimum of 14 days.

6.0 PHYSICAL PROPERTIES

6.1 The polyresin binder is a high solids pigmented binder containing special fibers to promote strength. It is capable of drying/curing to a depth of 10mm in a single lift when mixed at the specified levels of 1-3mm rubber granules:

Viscosity > 90 ku or >1200 cps Pigment and Filler > 6% total formula

6.2 The polyresin coating is a fully pigmented acrylic topcoat system designed to have a high resistance to ultraviolet light. It is made from acrylic resins specifically designed for track surfaces to provide a tough, long lasting surface that can withstand the elements. It should be applied in 2 coats at a coverage rate of .05 gal./s.y. per coat.

6.3 **Rubber Properties**: 1-3mm Sieve Analysis – other sieve sizes may be used to achieve a different surface texture or force reduction characteristic; at the discretion of the owner and/or installer. Rubber supply can vary.

Mesh	**M.M.**	**% Retained**	Specific Gravity: Hardness: Shore A, 55-75 durometer
6	3.36	0-15%	Black Rubber Granules: 1.15-1.40
10	2.00	60-85%	Color EPDM Rubber Granules: 1.40-1.60
18	1.00	10-30%	
PAN 1.00	0-5%		

7.0 QUALITY ASSURANCE:

Installer shall be a member in good standing of the American Sports Builders Association (ASBA), with specific qualifications in building and surfacing running tracks. Installer must employ a Certified Track Builder (CTB) as conferred by the ASBA. Approved installer must have remained in business under the same business name for double the length of the warrantee period.

8.0 DISCLAIMER:

Suggestions for use of our product or inclusion of descriptive material from patents should not be understood as recommending the use of our product in violation of any patents.

9.0 GENERAL:

Materials must be specifically designed for the construction of running track surfaces. Materials specified shall be delivered to the site in sealed drums or totes. Minimal addition of clear, fresh water at the job site is dependent on temperature and material flow. Coverage rates are based upon material prior to mixing with water. Dispose of empty containers in accordance with local, state and federal regulations.

Bidder: FieldTurf USA, Inc.
G.3
6 yr warranty

BLACK POLYRESIN TRACK SYSTEM

1.0 DESCRIPTION

This specification covers the installation of a new, high performance resilient track surfacing system for new asphalt surfaces. This track system utilizes specially compounded, pigmented, water-based binders and select rubber granules to provide strength, flexibility and to prevent ultra violet degradation. Multiple topcoats are applied to further protect against harmful UV rays and to reduce wear. The system provides a durable, resilient, spike resistant surface for recreational and competitive use.

NOTE: The success of the running track surface is dependent on a sound base (with good drainage) and the asphalt concrete meeting the requirements of The National Asphalt Paving Association and the American Sports Builders Association. Variations of the existing asphalt subsurface should not exceed 1/8" in 10' when measured in any direction with a straightedge.

2.0 MATERIALS – All liquid products shall be supplied by one manufacturer.

2.1 **Court Patch Binder**

2.2 **Latex tack coat**

2.3 **Polyresin Binder** – (Black).

2.4 **Rubber Granules** – select granules for job mixing with binder.

2.5 **Polyresin Coating** – (Black).

2.6 **Line Paint**

2.7 **Pigment** – Water-borne pigment for enhanced color depth (Black).

2.8 **Water** – The water used in all mixtures shall be fresh and potable.

3.0 SURFACE PREPARATION

3.1 Prior to the application of surfacing materials, the entire surface should be flooded and checked for minor depressions or irregularities. Any puddled area covering a nickel shall be marked and repaired with Court Patch Binder. After patching, the asphalt surface shall not vary more than 1/8" in 10' measured in any direction.

4.0 CONSTRUCTION

Allow all patchwork to dry thoroughly. The surface to be coated must be sound, smooth and free from dust, dirt, or oily materials.

4.1 **Primer Coat** – A tack coat of must be applied over the entire surface at a rate of .04 gal./s.y. Allow to dry thoroughly.

4.2 **Track Surface** – Materials shall be applied to achieve a dense uniform surface of not less than the specified thickness in not less than four layers. The binder must be evenly distributed amongst the rubber granules upon the application of materials. Coverage rates (measured in accordance with I.A.A.F. standards):

Color:	**Thickness:**	**Rubber Granules:**	**Binder (Black):**
Black	3/8" (9.5MM)	10.5 lbs./s.y.	.60 gal./s.y.
Black	½" (12.5MM)	14.0 lbs./s.y.	.78 gal./s.y.

Coverage rate based on undiluted product. Binder to rubber ratio shall be 1 gallon Polyresin binder per 18 lbs. of Black S.B.R. Rubber.

To further enhance color depth, it is recommended to add 5 gallons of pigment to each 300 gallon tote of binder on the final spray coat. Pigment is a water-borne colorant.

The coverage rate for rubber granules is dependent on the specific gravity (density) of the rubber and the installation method of the surfacing system. Different densities will affect the dry bulking value of the rubber, which determines the weight per square yard for a specified thickness. The specific gravity for rubber particles can vary between colors, size, and manufacturers. It is recommended to consult the manufacturer for more information. Also, different application methods can affect the overall system density requiring lower or higher volumes of product. System weights and volumes shall be verified by on site sample methods.

4.3 **Top Coat** – Polyresin Coating shall be applied by approved spray equipment at a rate of not less than .10 gallons per square yard.

4.4 **Line striping** – Line paint shall be applied to meet all rules and regulations of the local track federation.

5.0 LIMITATIONS

- No part of the construction shall be conducted during rainfall or when rain is imminent.
- Allow 4-5 hours to cure at least 70F. Lower temperature and higher temperature will increase the drying time.
- Do not apply when surface temperature is above 130F.
- Apply only when ambient temperature is 50F and rising.
- Keep from freezing. Do not store in the hot sun.
- The Polyresin Track System will not prevent pavement cracks from occurring.
- Allow applications to thoroughly cure prior to subsequent applications.
- Use caution when applying materials near adjacent areas. Mask when necessary to prevent over spray.
- Allow new asphalt to cure for a minimum of 14 days.

6.0 PHYSICAL PROPERTIES

6.1 The polyresin binder is a high solids pigmented binder containing special fibers to promote strength. It is capable of drying/curing to a depth of 10mm in a single lift when mixed at the specified levels of 1-3mm rubber granules:

Viscosity > 90 ku or >1200 cps Pigment and Filler > 6% total formula

6.2 The polyresin coating is a fully pigmented acrylic topcoat system designed to have a high resistance to ultraviolet light. It is made from acrylic resins specifically designed for track surfaces to provide a tough, long lasting surface that can withstand the elements. It should be applied in 2 coats at a coverage rate of .05 gal./s.y. per coat.

6.3 **Rubber Properties**: 1-3mm Sieve Analysis – other sieve sizes may be used to achieve a different surface texture or force reduction characteristic; at the discretion of the owner and/or installer. Rubber supply can vary.

Mesh	**M.M.**	**% Retained**	Specific Gravity: Hardness: Shore A, 55-75 durometer
6	3.36	0-15%	Black Rubber Granules: 1.15-1.40
10	2.00	60-85%	Color EPDM Rubber Granules: 1.40-1.60
18	1.00	10-30%	
PAN 1.00	0-5%		

7.0 QUALITY ASSURANCE:

Installer shall be a member in good standing of the American Sports Builders Association (ASBA), with specific qualifications in building and surfacing running tracks. Installer must employ a Certified Track Builder (CTB) as conferred by the ASBA. Approved installer must have remained in business under the same business name for double the length of the warrantee period.

8.0 DISCLAIMER:

Suggestions for use of our product or inclusion of descriptive material from patents should not be understood as recommending the use of our product in violation of any patents.

9.0 GENERAL:

Materials must be specifically designed for the construction of running track surfaces. Materials specified shall be delivered to the site in sealed drums or totes. Minimal addition of clear, fresh water at the job site is dependent on temperature and material flow. Coverage rates are based upon material prior to mixing with water. Dispose of empty containers in accordance with local, state and federal regulations.

BSS 100 TOP (5MM)
Product Specifications

G.3- Bidder: FieldTurf USA, Inc.

PART 1 – GENERAL

1.1 SUMMARY

A. Product Name: BSS 100 TOP (5MM)

B. Product Description: Pour-in-place, all-weather synthetic track re-surface consisting of structural spray coatings of pigmented polyurethane and rubber.

C. Scope of Work: Furnish all required labor, materials and equipment to successfully install the specified all-weather synthetic track surface including striping and markings.

1.2 RELATED WORK

A. Earthwork
B. Drainage
C. Asphaltic Concrete Paving
D. Cast-in-Place Concrete
E. Synthetic Turf

1.3 REFERENCE STANDARDS

A. The work shall conform to the standards for track construction as prescribed or approved by the appropriate governing body; NFHS, NCAA, or IAAF.
   1. NFSHSA *Track and Field Rules.*
   2. ASBA *Running Tracks Construction and Maintenance Manual.*

1.4 SUBMITTALS

A. Product Data
B. Striping Diagram
C. Operation and Maintenance Manual
D. Warranty

1.5 QUALITY ASSURANCE

A. Synthetic surfacing contractor (SSC) shall be licensed and bonded and possess a valid contractor's license in the state where Work is performed.

B. SSC shall have a minimum of 5 years experience installing the specified all-weather track surface under the same corporate name as current operations.

BSS 1000 5mm Top Coat
Product Specifications

PART 1 – GENERAL

1.1 SUMMARY

A. Product Name: BSS 100 5mm Top Coat.

B. Product Description: Pour-in-place, all-weather synthetic track re-surface consisting of a solid pour polyurethane coating with embedded rubber granule finish.

C. Scope of Work: Furnish all required labor, materials and equipment to successfully install the specified all-weather synthetic track surface including striping and markings.

1.2 RELATED WORK

A. Earthwork
B. Drainage
C. Asphaltic Concrete Paving
D. Cast-in-Place Concrete
E. Synthetic Turf

1.3 REFERENCE STANDARDS

A. The work shall conform to the standards for track construction as prescribed or approved by the appropriate governing body; NFHS, NCAA, or IAAF.
   1. NFSHSA *Track and Field Rules.*
   2. ASBA *Running Tracks Construction and Maintenance Manual.*

1.4 SUBMITTALS

A. Product Data
B. Striping Diagram
C. Operation and Maintenance Manual
D. Warranty

1.5 QUALITY ASSURANCE

A. Synthetic surfacing contractor (SSC) shall be licensed and bonded and possess a valid contractor's license in the state where Work is performed.

B. SSC shall have a minimum of 5 years experience installing the specified all-weather track surface under the same corporate name as current operations.

1.6 PROJECT CONDITIONS

A. SSC, General Contractor (GC) and/or Owner, shall conduct a pre-construction meeting to review project conditions prior to dispatch of the SSC's installation team.

B. Synthetic surface base.
   1. The base surface shall meet the standards set by the Architect/Engineer and described in the product specifications.
   2. Allow minimum of 14 days cure on new asphalt, 28 days cure on new concrete prior to application of specified synthetic track surface.
   3. Repair work required on the base shall be approved by the Architect/Engineer.
   4. GC and/or Owner shall be responsible to protect the base from activities and traffic that may damage the base or leave dirt, oil or other foreign material on the base prior to application of the synthetic track surface.

C. Weather
   1. Apply the synthetic track surface only during favorable weather conditions.
   2. No application of the synthetic track surface shall be conducted during rainfall, when rain is imminent, when freezing temperatures are forecasted or exist, or when gusting winds are occurring.
   3. Work is to progress only when the SSC can guarantee successful cure of the materials.

D. During surface installation and striping, all irrigation systems shall be shut-off or controlled so that no water falls on the track or event areas.

E. During set-up, installation and striping, the GC and/or Owner shall be responsible to have the entire track and other pertinent areas closed and secured of all activities 24 hours per day until completion of the project.

1.7 WARRANTY

A. Manufacturer's and Installer's Warranty
   1. The warranty on the all-weather synthetic track surface shall endure for five (5) years from completion of installation.
   2. The warranty is to be provided directly by the SSC to the Owner.
   3. The warranty shall cover defects in materials and workmanship not deemed as ordinary wear on a running track.

.

B. Warranty Bond not required.

PART 2 – PRODUCTS

2.1 MANUFACTURERS

A. Beynon Sports Surfaces, Inc., 19600 SW 129th Ave. Suite A, Tualatin, OR 97092, Tel: 503-691-2484, Fax: 503-692-0491, www.beynonsports.com

2.2 MATERIALS

A. Rubber
   1. Embedded rubber shall be EPDM with a 1.0-4.0mm gradation. Color shall be red.

B. Binder
   1. Solid pour primer shall be polyurethane compatible with coating materials.
   2. Solid pour binder shall be polyurethane solvent free and self-leveling. Color shall be red.

C. Marking and Line Paint
   1. The paint shall be formulated to be compatible with synthetic track surface materials.
   2. Colors shall be as prescribed or approved by the appropriate governing body; NFHS, NCAA, or IAAF.

PART 3 – EXECUTION

3.1 EXAMINATION

A. SSC shall examine project conditions to ensure successful installation of the synthetic track surface. Any deficiencies shall be reported to the GC and/or Owner for corrective action.

3.2 PREPARATION

B. SSC to protect adjacent areas from contamination of synthetic track surfacing materials due to installation procedures.

C. SSC shall prepare the base surface using a power blower to remove surface dirt. Cleaning necessary to remove embedded dirt, oil, or other foreign material shall be the responsibility of the GC and/or Owner.

3.3 INSTALLATION

A. Primer
   1. Apply solid pour primer uniformly at a rate of not less than 0.3 pounds per square yard of the synthetic track surface area.
   2. Allow a minimum of 30 minutes cure before application of the base mat materials.

B. Solid Pour Coating
   1. The solid pour coating shall have a minimum weight of 12.25 pounds per square yard; consisting of a minimum 6.25 pounds of pour binder, and 6 pounds of embedded rubber granule.
   2. The solid pour binder components shall be prepared in a mechanical mixer and thoroughly mixed until a homogenous blend is obtained. The self-leveling mixed coating materials are poured onto the surface and spread utilizing a notched trowel or squeegee.
   3. Prior to the initial set of the pour materials, the specified rubber granules are broadcast into the surface in excess. After curing, the excess granules are removed and recovered.
   4. Provide a minimum finished depth of 5 mm of new solid pour coating.

C. Striping
   1. Striping Contractor shall verify with Owner's representative the exact locations, size, shape, and color of the lines and markings before proceeding with striping and markings.
   2. Engineer the layout of lane lines, starting lines, and markings as prescribed or approved by the Owner's representative, Architect/Engineer and the appropriate governing body; NFHS, NCAA, or IAAF.
   3. All lines and markings shall be spray applied by experienced personnel utilizing equipment manufactured for line striping. Striping lines and markings shall have true sharp edges.
   4. SSC shall provide a detailed drawing to the Owner clearly identifying color codes and locations of lines and markings.

3.4 CLEANING

A. Upon completion of work remove all containers, surplus materials, and installation debris.

B. Leave area of work in clean orderly condition ready for use by Owner.

BSS 300 LE
Product Specifications

PART 1 – GENERAL

1.1 SUMMARY

A. Product Name: BSS 300 LE.

B. Product Description: Pour-in-place, all-weather synthetic track surface consisting of impermeable polyurethane bound rubber base mat and a solid pour polyurethane coating with rubber granules in a light encapsulating finish.

C. Scope of Work: Furnish all required labor, materials and equipment to successfully install the specified all-weather synthetic track surface including striping and markings to a base properly prepared by others.

1.2 RELATED WORK

A. Earthwork
B. Drainage
C. Asphaltic Concrete Paving
D. Cast-in-Place Concrete
E. Synthetic Turf

1.3 REFERENCE STANDARDS

A. The work shall conform to the standards for track construction as prescribed or approved by the appropriate governing body; NFHS, NCAA, or IAAF.
   1. NFSHSA *Track and Field Rules.*
   2. ASBA *Running Tracks Construction and Maintenance Manual.*

1.4 SUBMITTALS

A. Product Data
B. Striping Diagram
C. Operation and Maintenance Manual
D. Warranty

1.5 QUALITY ASSURANCE

A. Synthetic surfacing contractor (SSC) shall be licensed and bonded and possess a valid contractor's license in the state where Work is performed.

B. SSC shall have a minimum of 5 years experience installing the specified all-weather track surface under the same corporate name as current operations.

1.6 PROJECT CONDITIONS

A. SSC, General Contractor (GC) and/or Owner, shall conduct a pre-construction meeting to review project conditions prior to dispatch of the SSC's installation team.

B. Synthetic surface base asphalt/concrete.
   1. The base asphalt and/or concrete shall meet the standards set by the Architect/Engineer and described in the product specifications.
   2. Allow minimum of 28 days cure on new asphalt, 28 days cure on new concrete prior to application of specified synthetic track surface.
   3. When surfacing on new asphalt, the asphalt contractor shall provide a flood test of the asphalt base.
   4. Repair work required on the base shall be approved by the Architect/Engineer.
   5. GC and/or Owner shall be responsible to protect the base from activities and traffic that may damage the base or leave dirt, oil or other foreign material on the base prior to application of the synthetic track surface.

C. Weather
   1. Apply the synthetic track surface only during favorable weather conditions.
   2. No application of the synthetic track surface shall be conducted during rainfall, when rain is imminent, when freezing temperatures are forecasted or exist, or when gusting winds are occurring.
   3. Work is to progress only when the SSC can guarantee successful cure of the materials.

D. During surface installation and striping, all irrigation systems shall be shut-off or controlled so that no water falls on the track or event areas.

E. During set-up, installation and striping, the GC and/or Owner shall be responsible to have the entire track and other pertinent areas closed and secured of all activities 24 hours per day until completion of the project.

1.7 WARRANTY

A. Manufacturer's and Installer's Warranty
   1. The warranty on the all-weather synthetic track surface shall endure for five (5) years from completion of installation.
   2. The warranty is to be provided directly by the SSC to the Owner.
   3. The warranty shall cover defects in materials and workmanship not deemed as ordinary wear on a running track.

.

B. Warranty Bond not required.

PART 2 – PRODUCTS

2.1 MANUFACTURERS

A. Beynon Sports Surfaces, Inc., 19600 SW 129th Ave Suite A, Tualatin, OR 97092, Tel: 503-691-2484, Fax: 503-692-0491, www.beynonsports.com

2.2 MATERIALS

A. Rubber
   1. Base mat rubber shall be SBR granules with a 1.0-3.0mm gradation.
   2. Base mat sealer may utilize SBR/EPDM rubber dust with a 16 to 20 mesh gradation.
   3. Embedded rubber shall be EPDM with a 1.0-4.0mm gradation. Color shall be red.

B. Binder
   1. Base mat primer shall be polyurethane compatible with base mat materials.
   2. Base mat binder shall be polyurethane moisture cure, MDI based, 100% solids.
   3. Base mat sealer shall be polyurethane solvent free, self leveling and compatible with the base mat and solid pour coating.
   4. Solid pour binder shall be polyurethane solvent free and self leveling. Color shall be red.
   5. Encapsulating spray shall be polyurethane highly pigmented, meeting all EPA VOC requirements. Color shall be red.

C. Marking and Line Paint
   1. The paint shall be formulated to be compatible with synthetic track surface materials.
   2. Colors shall be as prescribed or approved by the appropriate governing body; NFHS, NCAA, or IAAF.

PART 3 – EXECUTION

3.1 EXAMINATION

A. SSC shall examine project conditions to ensure successful installation of the synthetic track surface. Any deficiencies shall be reported to the GC and/or Owner for corrective action.

3.2 PREPARATION

B. SSC to protect adjacent areas from contamination of synthetic track surfacing materials due to installation procedures.

C. SSC shall prepare the base surface using a power blower to remove surface dirt. Cleaning necessary to remove embedded dirt, oil, or other foreign material shall be the responsibility of the GC and/or Owner.

3.3 INSTALLATION

A. Primer
   1. Apply base mat primer uniformly at a rate of not less than 0.3 pounds per square yard of the synthetic track surface area.
   2. Allow a minimum of 30 minutes cure before application of the base mat materials.

B. Base Mat
   1. The base mat shall have a minimum weight of 18 pounds per square yard; consisting of 20 parts base mat binder and 100 parts base mat rubber, by weight.
   2. The materials shall be prepared in a mechanical mixer, to assure complete coverage of each rubber particle by the binding agent, and mixed until a homogenous mixture is obtained.
   3. Mixed materials making up the base mat shall be applied to the base surface by a mechanically operated finishing machine which shall have an electrically heated screed.

4. The base mat will be applied in one layer only to a minimum depth of 12 mm.

C. Base Mat Sealer
   1. The base mat sealer shall have a minimum weight of 3 pounds per square yard.
   2. The base mat sealer materials shall be prepared in a mechanical mixer and thoroughly mixed until a homogenous blend is obtained.
   3. The base mat sealer may contain up to 31% of the specified base mat sealer rubber, by weight.
   4. Mixed materials making up the base mat sealer shall be scraped or squeegee applied to the open pores of the base mat to create an impermeable finish.

D. Solid Pour Coating
   1. The solid pour coating shall have a minimum weight of 9.75 pounds per square yard; consisting of a minimum 3.75 pounds of pour binder and 6 pounds of embedded rubber granule.
   2. The solid pour binder components shall be prepared in a mechanical mixer and thoroughly mixed until a homogenous blend is obtained. The self leveling mixed coating materials are poured onto the sealed base mat and spread utilizing a notched trowel or squeegee.
   3. Prior to the initial set of the pour materials, the specified rubber granules are broadcast into the surface in excess. After curing, the excess granules are removed and recovered leaving a minimum 3mm solid pour embedded rubber finish.

E. Encapsulating Spray
   1. The light encapsulating spray shall have a minimum weight of 1 pound per square yard.
   2. The light encapsulating spray shall be applied in a minimum of two layers using equipment specifically designed for the application of synthetic track surfaces.
   3. The two layers shall be sprayed in opposite directions in order to achieve a uniform application.

F. Striping
   1. Striping Contractor shall verify with Owner's representative the exact locations, size, shape, and color of the lines and markings before proceeding with striping and markings.
   2. Engineer the layout of lane lines, starting lines, and markings as prescribed or approved by the Owner's representative, Architect/Engineer and the appropriate governing body; NFHS, NCAA, or IAAF.
   3. All lines and markings shall be spray applied by experienced personnel utilizing equipment manufactured for line striping. Striping lines and markings shall have true sharp edges.
   4. SSC shall provide a detailed drawing to the Owner clearly identifying color codes and locations of lines and markings.

3.4 CLEANING

A. Upon completion of work remove all containers, surplus materials, and installation debris.

B. Leave area of work in clean orderly condition ready for use by Owner.

BSS 50 (ATLAS POLY-MAT)
Product Specifications

PART 1 – GENERAL

1.1 SUMMARY

A. Product Name: BSS 50

B. Product Description: Pour-in-place, all-weather synthetic track surface consisting of permeable polyurethane bound rubber base mat.

C. Scope of Work: Furnish all required labor, materials and equipment to successfully install the specified all-weather synthetic track surface including striping and markings to a base properly prepared by others.

1.2 RELATED WORK

A. Earthwork
B. Drainage
C. Asphaltic Concrete Paving
D. Cast-in-Place Concrete
E. Synthetic Turf

1.3 REFERENCE STANDARDS

A. The work shall conform to the standards for track construction as prescribed or approved by the appropriate governing body; NFHS, NCAA, or IAAF.
   1. NFSHSA *Track and Field Rules.*
   2. ASBA *Running Tracks Construction and Maintenance Manual.*

1.4 SUBMITTALS

A. Product Data
B. Operation and Maintenance Manual
C. Warranty

1.5 QUALITY ASSURANCE

A. Synthetic surfacing contractor (SSC) shall be licensed and bonded and possess a valid contractor's license in the state where Work is performed.

B. SSC shall have a minimum of 5 years experience installing the specified all-weather track surface under the same corporate name as current operations.

1.6 PROJECT CONDITIONS

A. SSC, General Contractor (GC) and/or Owner, shall conduct a pre-construction meeting to review project conditions prior to dispatch of the SSC's installation team.

B. Synthetic surface base asphalt/concrete.
   1. The base asphalt and/or concrete shall meet the standards set by the Architect/Engineer and described in the product specifications.
   2. Allow minimum of 14 days cure on new asphalt, 28 days cure on new concrete prior to application of specified synthetic track surface.
   3. When surfacing on new asphalt, the asphalt contractor shall provide a flood test of the asphalt base.
   4. Repair work required on the base shall be approved by the Architect/Engineer.
   5. GC and/or Owner shall be responsible to protect the base from activities and traffic that may damage the base or leave dirt, oil or other foreign material on the base prior to application of the synthetic track surface.

C. Weather
   1. Apply the synthetic track surface only during favorable weather conditions.
   2. No application of the synthetic track surface shall be conducted during rainfall, when rain is imminent, when freezing temperatures are forecasted or exist, or when gusting winds are occurring.
   3. Work is to progress only when the SSC can guarantee successful cure of the materials.

D. During surface installation and striping, all irrigation systems shall be shut-off or controlled so that no water falls on the track or event areas.

E. During set-up, installation and striping, the GC and/or Owner shall be responsible to have the entire track and other pertinent areas closed and secured of all activities 24 hours per day until completion of the project.

1.7 WARRANTY

A. Manufacturer's and Installer's Warranty
   1. The warranty on the all-weather synthetic track surface shall endure for two (2) years from completion of installation.
   2. The warranty is to be provided directly by the SSC to the Owner.
   3. The warranty shall cover defects in materials and workmanship not deemed as ordinary wear on a running track.

.

B. Warranty Bond not required.

PART 2 – PRODUCTS

2.1 MANUFACTURERS

A. Beynon Sports, 19600 SW 129th Ave. Suite A, Tualatin, OR 97092,
Tel: 503-691-2484, Fax: 503-692-0491, www.beynonsports.com

2.2 MATERIALS

A. Rubber
1. Base mat rubber shall be SBR granules with a 1.0-3.0mm gradation.
2. Color shall be black

B. Binder
1. Base mat primer shall be polyurethane compatible with base mat materials.
2. Base mat binder shall be polyurethane moisture cure, MDI based, 100% solids.
3. Color shall be black.

C. Marking and Line Paint
1. The paint shall be formulated to be compatible with synthetic track surface materials.
2. Colors shall be as prescribed or approved by the appropriate governing body; NFHS, NCAA, or IAAF.

PART 3 – EXECUTION

3.1 EXAMINATION

A. SSC shall examine project conditions to ensure successful installation of the synthetic track surface. Any deficiencies shall be reported to the GC and/or Owner for corrective action.

3.2 PREPARATION

B. SSC to protect adjacent areas from contamination of synthetic track surfacing materials due to installation procedures.

C. SSC shall prepare the base surface using a power blower to remove surface dirt. Cleaning necessary to remove embedded dirt, oil, or other foreign material shall be the responsibility of the GC and/or Owner.

3.3 INSTALLATION

A. Primer
1. Apply base mat primer uniformly at a rate of not less than 0.3 pounds per square yard of the synthetic track surface area.
2. Allow a minimum of 30 minutes cure before application of the base mat materials.

B. Base Mat
1. The base mat shall have a minimum weight of 18 pounds per square yard; consisting of 20 parts base mat binder and 100 parts base mat rubber, by weight.
2. The materials shall be prepared in a mechanical mixer, to assure complete coverage of each rubber particle by the binding agent, and mixed until a homogenous mixture is obtained.
3. Mixed materials making up the base mat shall be applied to the base surface by a mechanically operated finishing machine which shall have an electrically heated screed.
4. The base mat will be applied in one layer only to a minimum depth of 12 mm.

C. Striping
   1. Striping Contractor shall verify with Owner's representative the exact locations, size, shape, and color of the lines and markings before proceeding with striping and markings.
   2. Engineer the layout of lane lines, starting lines, and markings as prescribed or approved by the Owner's representative, Architect/Engineer and the appropriate governing body; NFHS, NCAA, or IAAF.
   3. All lines and markings shall be spray applied by experienced personnel utilizing equipment manufactured for line striping. Striping lines and markings shall have true sharp edges.

3.4 CLEANING

A. Upon completion of work remove all containers, surplus materials, and installation debris.

B. Leave area of work in clean orderly condition ready for use by Owner.

BSS 100
Basemat with Waterbased Structural Spray
Synthetic Track Surfacing System Specifications

Part 1 – General

1.1 Scope

A. The synthetic surfacing contractor shall furnish all labor, materials, equipment, supervision, and services necessary for the proper completion of all **BSS 100** Synthetic Track Surfacing and related work indicated on the drawings and specified herein.

B. The synthetic surfacing contractor shall refer to the drawings for the required locations of synthetic track surfacing to be installed. All quantities and dimensions shall be field verified by the synthetic surfacing contractor.

1.2 Specific Scope of Work

A. Install an IAAF approved, porous polyurethane synthetic track system comprised of a base layer of polyurethane-bound SBR granules and topped with BEYPUR 160, a waterbased single-component polyurethane structural spray, and EPDM granules.

B. Layout and paint all track lines and event markings as required and specified by current IAAF and NCAA rules.

1.3 Coordination

A. The synthetic surfacing contractor shall coordinate the work specified with an authorized and appointed representative of the owner so as to perform the work during a period and in a manner acceptable to the owner.

Part 2 – Codes and Standards

2.1 Applicable Publications

B. Codes and standards follow the current guidelines set forth by the International Amateur Athletic Federation (IAAF) and the National Collegiate Athletic Association (NCAA), along with the current material testing guidelines as published by the American Society of Testing and Materials (ASTM).

2.2 Performance Standards

The **BSS 100** Track Surfacing System shall exhibit the following minimum performance standards as required by IAAF:

A.	Thickness:	12- 13mm or as specified
B.	Force Reduction:	35 to 50%
C.	Modified Vertical Deformation:	0.6 to 1.8mm
D.	Friction:	>0.5 (47 TRRL Skid Resistance)
E.	Tensile Strength:	≥ 0.4MPa
F.	Elongation at Break:	≥ 40%

Part 3 – Quality Assurance

3.1 Contractor and Manufacturer Qualifications

A. The CONTRACTOR and the MANUFACTURER must be the same.

B. The CONTRACTOR must have a minimum of 10 years experience in the installation of poured-in-place, two-component elastomeric polyurethane synthetic track surfacing.

C. The CONTRACTOR shall be able to furnish evidence that they have been in business for a period of not less than 3 years, under the present name, and if required, furnish financial statements for each of the past 3 years.

D. The CONTRACTOR must have installed a minimum of 10 outdoor track facilities in the last 2 years using the exact, IAAF certified, synthetic track surfacing, as specified herein with the contractor bidding this project.

E. The MANUFACTURER must have a minimum of 10 years of experience with compound two-part polyurethane for athletic surfaces.

F. The CONTRACTOR is required to provide documentation that shows the selected specified and installed product meets current IAAF Performance Standards for Synthetic Surfaced Athletics Tracks (Outdoor) and is certified in terms of the IAAF certification system as updated to present day.

G. CONTRACTOR is to provide a list of completed facilities, minimum of 10 which are certified to meet IAAF/NCAA rules & regulations, utilizing the same product as specified.

H. The MANUFACTURER must offer a minimum of seven (7) IAAF Certified Track Systems.

I. All polyurethane components must be MANUFACTURED in the United States in an **ISO 9001:2008 Certified** facility to ensure the highest quality materials.

J. The CONTRACTOR must have installed a minimum of three (3) Class I IAAF Certified outdoor tracks within the United States.

3.2 Submittals

The following submittals must be received with bid submittal:

A. Standard printed specifications of the synthetic track surfacing system to be installed on this project.

B. An affidavit attesting that the synthetic track surfacing material to be installed meets the requirements defined by the manufacturers currently published specifications and any modifications outlined in those technical specifications.

C. A synthetic track surfacing system sample, 12” x 12”in size, of the same synthetic track surfacing system to be installed on this project.

D. A list of completed facilities, including the installing supervisor, of the exact synthetic track surfacing system.

E. A current IAAF Certificate proving the product to be installed meets the current IAAF Performance Standards for Synthetic Surfaced Athletics Tracks (Outdoor).

Part 4 – Materials

4.1 Primers

A. Primers shall be BEYPRIM, a polyurethane-based primer specifically formulated to be compatible with the paved-in-place SBR granules, BEYPUR 300/320 and BEYPUR 160 track surfacing material.

4.2 Black SBR Granules

A. The rubber granules for the base mat shall be recycled SBR rubber, processed and chopped to 1-3mm size, containing less than 1% dust.

4.3 EPDM Granules

A. The rubber granules for the BEYPUR structural spray wearing coats shall be EPDM peroxide cured, synthetic rubber containing a minimum 20% EPDM resin, with a specific gravity of 1.5 $\pm$ 0.1 g/cm3. The EPDM rubber shall be the same color as chosen by the owner for the track surface.

4.4 Polyurethane Binder

A. Binder for the black mat shall be BEYPUR, an MDI-based single-component, polyurethane binding agent. The binder shall not have a free TDI monomer level above 0.2% and must be solvent free. The binder must be specially formulated for compatibility with SBR rubber crumb.

4.5 Structural Spray Coating

A. The spray coating shall be BEYPUR 160, a waterbased single-component, pigmented polyurethane, specifically formulated for compatibility with EPDM granules. The coating shall be Red. Pigment intergraded in the field shall not be allowed.

4.6 Line Marking Paint

A. All line and event markings shall be applied by experienced personnel utilizing the manufacturers' recommended pigmented paint compatible with the **BSS 100** Track Surfacing material.

Part 5 – Installation

5.1 Subbase Requirements

A. Asphalt Compaction

a. The Synthetic Track Surfacing System shall be laid on an approved subbase. The General Contractor shall provide compaction test results of 92-96% for the installed subbase and asphalt surface.

b. For NCAA certification the following criteria must be followed. The track surface, i.e. asphalt substrate, shall not vary from planned cross slope by more than +/- 0.2%, with a maximum lateral slope outside to inside of 1%, and a maximum slope of 0.1% in any running direction. The finished asphalt shall not vary under a 10' straight edge more than 1/8".

c. It should be the responsibility of the asphalt-paving contractor to flood the surface immediately after the asphalt is capable of handling

traffic. If, after 20 minutes of drying time, there are birdbaths evident, it shall be the responsibility of the architect, in conjunction with the surfacing contractor, to determine the method of correction. No cold tar patching, skin patching or sand mix patching will be acceptable.

B. Asphalt Quality

a. No Recycled Asphalt Pavement (RAP) shall be used in the wear course asphalt mix design as the inclusion of RAP as an off-set to virgin asphalt binder results in a brittle hot-mix asphalt (HMA) with significantly lower tensile strength and fatigue resistance. The sports surfacing contractor will not be held responsible for asphalt failures resulting from the inclusion RAP in the HMA mix design of the wear course.

b. Any oil spills (hydraulic, diesel, motor oil, etc.) must be completely removed, either by chipping out or removing and replacing with new, keyed in asphalt. The minimum depth of any asphalt replacement shall be one inch. The curing time for the asphalt base is 28 days. It shall be the responsibility of the surfacing contractor to determine if the asphalt substrate has cured sufficiently prior to the application of polyurethane surfacing system.

C. Responsibility of Others

a. It shall be the responsibility of the general contractor to determine if the asphalt substrate meets all design specifications, i.e. cross slopes, planarity and specific project criteria. After all the above conditions are met, the synthetic surfacing contractor must, in writing, accept the planarity of the asphalt receiving base, before work can commence.

5.2 Thickness

A. The thickness of the **BSS 100** Synthetic Track Surfacing System shall be 13mm.

5.3 Equipment

A. The **BSS 100** Synthetic Track Surfacing System components shall be processed and installed by specially designed machinery and equipment. A mechanically operated paver with variable regulated speed and thermostatically controlled screed shall be used in the installation of the base mat. The wearing course shall be installed using automatic electronic

portioning, which provides continuous mixing and feeding for an accurate, quality controlled installation.

B. No hand mixing is allowed.

5.4 Installation

A. Base Course

The SBR granules and BEYPUR shall be mixed together on site to regulate the ratio/quantity of SBR, not to exceed 82% by weight in the base mat portion of the system. The single component polyurethane binder shall be mixed with the SBR rubber so that a minimum of 20%, by weight, exists in the final mixture. This mixture is then mechanically installed using the paver.

B. Wearing Course

The 0.5 to 1.5 millimeter EPDM granules shall be mixed with BEYPUR 160, the waterbased single-component structural spray coating. The structural spray shall be made in two (2) uniform applications.

5.5 Site Conditions

A. Installation shall not take place if adjacent or concurrent construction generates excessive dust, abrasives or any other by-product that, in the opinion of the installer, would be harmful to the track material, until completion of such works.

B. Apply Synthetic Track Surfacing in dry weather when pavement and atmospheric temperatures are fifty (50) degrees Fahrenheit or above, and are anticipated to remain above fifty (50) degrees Fahrenheit for twenty-four (24) hours after completing application.

C. The maximum temperature cannot exceed 105 degrees at any point during a 24 - hour period.

D. Rain cannot be falling. If there is a threat of rain, work shall cease until dry conditions can be re-established on the track pavement. Work is to proceed only when adequate curing can be guaranteed by the manufacturer.

Part 6 – Line Striping and Event Markings

6.1 Layout

A. Line striping and event markings shall be laid out in accordance with current IAAF and NCAA rules.

6.2 Certification

A. Upon completion of the installation, the owner shall be supplied with all necessary computations and drawings, as well as a letter of certification attesting to the accuracy of the markings.

Part 7 – Guarantee

A. The BSS 100 Track Surfacing System shall be fully guaranteed against faulty workmanship and material failure for a period of five (5) years from the date of acceptance. The warranty coverage shall not be prorated nor limited by the amount of usage.

B. Synthetic surfacing material found to be defective as a result of faulty workmanship and/or material failure shall be replaced or repaired at no charge, upon written notification within the guarantee period.

END OF SECTION

BSS 1000
10mm Embedded
Synthetic Track Surfacing System Specifications

Part 1 – General

1.1 Scope

A. The synthetic surfacing contractor shall furnish all labor, materials, equipment, supervision and services necessary for the proper completion of the **BSS 1000 Full Pour Dual Durometer** synthetic track surfacing and related work indicated on the drawings and specified herein.

B. The synthetic surfacing contractor shall refer to the drawings for the required locations of synthetic track surfacing to be installed. All quantities and dimensions shall be field verified by the synthetic surfacing contractor.

1.2 Specific Scope of Work

A. Install a full depth poured-in-place two-component, UV stabilized elastomeric polyurethane Dual Durometer synthetic surfacing system with embedded textured finish.

B. Layout and paint all track lines and event markings as required and specified by current NCAA and NFHS rules.

1.3 Coordination

A. The synthetic surfacing contractor shall coordinate the work specified with an authorized and appointed representative of the owner so as to perform the work during a period and in a manner acceptable to the owner.

Part 2 – Codes and Standards

2.1 Applicable Publications

A. Codes and standards follow the current guidelines set forth by the National Collegiate Athletic Association (NCAA), along with the current material testing guidelines as published by the American Society of Testing and Materials (ASTM).

Part 3 - Quality Assurance

3.1 Contractor and Manufacturer Qualifications

A. The CONTRACTOR and the MANUFACTURER must be the same.

B. The CONTRACTOR must have a minimum of 10 years experience in the installation of poured-in-place, two-component elastomeric polyurethane synthetic track surfacing.

C. The CONTRACTOR shall be able to furnish evidence that they have been in business for a period of not less than 3 years, under the present name, and if required, furnish financial statements for each of the past 3 years.

D. The CONTRACTOR must have installed a minimum of 10 outdoor track facilities in the last 2 years using the exact, poured-in-place, two-component elastomeric polyurethane synthetic track surfacing, as specified herein with the contractor bidding this project.

E. The MANUFACTURER must have a minimum of 10 years of experience with compound two-part polyurethane for athletic surfaces.

F. CONTRACTOR is to provide a list of completed facilities, minimum of 10 which are certified to meet NCAA rules & regulations, utilizing the same product as specified.

G. All polyurethane components must be MANUFACTURED in the United States in an ISO 9001 Certified facility.

3.2 Submittals

The following submittals must be received with bid submittal:

A. Standard printed specifications of the synthetic track surfacing system to be installed on this project.

B. An affidavit attesting that the synthetic track surfacing material to be installed meets the requirements defined by the manufacturers currently published specifications and any modifications outlined in those technical specifications.

C. A synthetic track surfacing system sample, 12” x 12”in size, of the same synthetic track surfacing system to be installed on this project.

D. A list of completed facilities, including the installing supervisor, of the exact Dual Durometer synthetic track surfacing system.

Part 4 – Materials

4.1 Elastomeric Polyurethane

A. BEYPUR, the two-component U.V. stabilized elastomeric polyurethane compounded from polyol and isocyanate components, based on one hundred percent Methylene Diphenyl Isocyanate (MDI). No Toluene Diisocyanate Isocyanate (TDI) will be allowed.

B. The elastomeric polyurethane shall be red in color.

4.2 EPDM Granulate

A. The EPDM granulates shall be approximately 1 to 3mm in size.

B. The EPDM granulates and the U.V. stabilized elastomeric polyurethane shall be color matched.

4.3 Rubber Granulate

A. Fine mesh Styrene Butadiene Rubber (SBR) processed ground to a graded size not to exceed 20 mesh in size.

B. A maximum of twenty percent, by weight of the SBR will be allowed in the force reduction layer.

4.4 Line Marking Paint

A. Manufacturers recommended pigmented paint.

Part 5 – Installation

5.1 Subbase Requirements

A. Asphalt Compaction

a. The Synthetic Track Surfacing System shall be laid on an approved subbase. The General Contractor shall provide compaction test results of 92-96% for the installed subbase and asphalt surface.

b. For NCAA certification the following criteria must be followed. The track surface, i.e. asphalt substrate, shall not vary from planned cross slope by more than +/- 0.2%, with a maximum lateral slope outside to inside of 1%, and a maximum slope of 0.1% in any running direction. The finished asphalt shall not vary under a 10' straight edge more than 1/8".

c. It should be the responsibility of the asphalt-paving contractor to flood the surface immediately after the asphalt is capable of handling traffic. If, after 20 minutes of drying time, there are birdbaths evident, it shall be the responsibility of the architect, in conjunction with the surfacing contractor, to determine the method of correction. No cold tar patching, skin patching or sand mix patching will be acceptable.

B. Asphalt Quality

a. No Recycled Asphalt Pavement (RAP) shall be used in the wear course asphalt mix design as the inclusion of RAP as an off-set to virgin asphalt binder results in a brittle hot-mix asphalt (HMA) with significantly lower tensile strength and fatigue resistance. The sports surfacing contractor will not be held responsible for asphalt failures resulting from the inclusion RAP in the HMA mix design of the wear course.

b. Any oil spills (hydraulic, diesel, motor oil, etc.) must be completely removed, either by chipping out or removing and replacing with new, keyed in asphalt. The minimum depth of any asphalt replacement shall be one inch. The curing time for the asphalt base is 28 days. It shall be the responsibility of the surfacing contractor to determine if the asphalt substrate has cured sufficiently prior to the application of polyurethane surfacing system.

C. Responsibility of Others

a. It shall be the responsibility of the general contractor to determine if the asphalt substrate meets all design specifications, i.e. cross slopes, planarity and specific project criteria. After all the above conditions are met, the synthetic surfacing contractor must, in writing, accept the planarity of the asphalt receiving base, before work can commence.

5.2 Thickness

A. Total thickness of the **BSS 1000 Full Pour Dual Durometer** synthetic track surfacing system shall average 10mm.

5.3 Equipment

A. The **BSS 1000 Full Pour Dual Durometer** synthetic track surfacing system components shall be processed and installed by specially designed machinery with automatic electronic portioning, which provides continuous mixing, feeding and finishing for accurate quality controlled installation.

B. No hand mixing is allowed.

5.4 Materials

A. Force Reduction Layer

The fine mesh SBR granules and UV stabilized elastomeric polyurethane shall be metered and mixed together on site to regulate the ratio/quantity of SBR, not to exceed fourteen percent in the system and to insure an even distribution of the granules throughout the force reduction layer. No multi-layered systems allowed.

B. Resilient Wearing Layer

The 1 to 3 millimeter EPDM granules shall be mechanically integrated with a UV stabilized elastomeric polyurethane to the full depth of the wearing layer. The resilient textured finish shall be a dense matrix of embedded EPDM granules.

5.5 Site Conditions

A. Installation shall not take place if adjacent or concurrent construction generates excessive dust, abrasives or any other by-product that, in the opinion of the installer, would be harmful to the track material, until completion of such works.

B. Apply Synthetic Track Surfacing in dry weather when pavement and atmospheric temperatures are fifty (50) degrees Fahrenheit or above, and are anticipated to remain above fifty (50) degrees Fahrenheit for twenty-four (24) hours after completing application.

C. The maximum temperature cannot exceed 105 degrees at any point during a 24 - hour period.

D. Rain cannot be falling. If there is a threat of rain, work shall cease until dry conditions can be re-established on the track pavement. Work is to proceed only when adequate curing can be guaranteed by the manufacturer.

Part 6 – Line Striping and Event Markings

6.1 Layout

A. Line striping and event markings shall be laid out in accordance with current NCAA and NFHS rules.

6.2 Certification

A. Upon completion of the installation, the owner shall be supplied with all necessary computations and drawings as well as a letter of certification attesting to the accuracy of the markings.

Part 7 – Guarantee

A. Synthetic track surfacing system shall be fully guaranteed against faulty workmanship and material failure for a period of five (5) years from the date of acceptance.

B. Synthetic surfacing material found to be defective as a result of faulty workmanship and/or material failure shall be replaced or repaired at no charge, upon written notification within the guarantee period.

END OF SECTION

BSS 1000
13mm Embedded
Synthetic Track Surfacing System Specifications

Part 1 – General

1.1 Scope

A. The synthetic surfacing contractor shall furnish all labor, materials, equipment, supervision and services necessary for the proper completion of the **BSS 1000 Full Pour Dual Durometer** synthetic track surfacing and related work indicated on the drawings and specified herein.

B. The synthetic surfacing contractor shall refer to the drawings for the required locations of synthetic track surfacing to be installed. All quantities and dimensions shall be field verified by the synthetic surfacing contractor.

1.2 Specific Scope of Work

A. Install an IAAF approved, full depth poured-in-place two-component, UV stabilized elastomeric polyurethane Dual Durometer synthetic surfacing system with embedded textured finish.

B. Layout and paint all track lines and event markings as required and specified by current IAAF and NCAA rules.

1.3 Coordination

A. The synthetic surfacing contractor shall coordinate the work specified with an authorized and appointed representative of the owner so as to perform the work during a period and in a manner acceptable to the owner.

Part 2 – Codes and Standards

2.1 Applicable Publications

A. Codes and standards follow the current guidelines set forth by the International Amateur Athletic Federation (IAAF) and the National Collegiate Athletic Association (NCAA), along with the current material testing guidelines as published by the American Society of Testing and Materials (ASTM).

2.2 Performance Standards

The new synthetic track surfacing system shall exhibit the following minimum performance standards as required by IAAF:

A.	Thickness:	(12-13mm) or as specified
B.	Force Reduction	35-50%
C.	Vertical Deformation:	0.6mm-2.5mm
D.	Coefficient of Friction:	≥ 0.5 (47 TRRL Scale)
E.	Tensile Strength:	≥ 0.5 Mpa
F.	Elongation:	≥ 40%

Part 3 - Quality Assurance

3.1 Contractor and Manufacturer Qualifications

A. The CONTRACTOR and the MANUFACTURER must be the same.

B. The CONTRACTOR must have a minimum of 10 years experience in the installation of poured-in-place, two-component elastomeric polyurethane synthetic track surfacing.

C. The CONTRACTOR shall be able to furnish evidence that they have been in business for a period of not less than 3 years, under the present name, and if required, furnish financial statements for each of the past 3 years.

D. The CONTRACTOR must have installed a minimum of 10 outdoor track facilities in the last 2 years using the exact, IAAF certified, poured-in-place, two-component elastomeric polyurethane synthetic track surfacing, as specified herein with the contractor bidding this project.

E. The MANUFACTURER must have a minimum of 10 years of experience with compound two-part polyurethane for athletic surfaces.

F. The CONTRACTOR is required to provide documentation that shows the selected specified and installed product meets current IAAF Performance Standards for Synthetic Surfaced Athletics Tracks (Outdoor) and is certified in terms of the IAAF certification system as updated to present day.

G. CONTRACTOR is to provide a list of completed facilities, minimum of 10 which are certified to meet IAAF/NCAA rules & regulations, utilizing the same product as specified.

H. The MANUFACTURER must offer a minimum of seven (7) IAAF Certified Track Systems.

I. All polyurethane components must be MANUFACTURED in the United States at the headquarters of the CONTRACTOR.

J. All Polyurethane components must be MANUFACTURED in an ISO 9001 Certified facility.

K. The CONTRACTOR must have installed a minimum of three (3) Class I IAAF Certified outdoor tracks within the United States.

3.2 Submittals

The following submittals must be received with bid submittal:

A. Standard printed specifications of the synthetic track surfacing system to be installed on this project.

B. An affidavit attesting that the synthetic track surfacing material to be installed meets the requirements defined by the manufacturers currently published specifications and any modifications outlined in those technical specifications.

C. A synthetic track surfacing system sample, 12” x 12”in size, of the same synthetic track surfacing system to be installed on this project.

D. A list of completed facilities, including the installing supervisor, of the exact Dual Durometer synthetic track surfacing system.

E. A current IAAF Certificate proving the product to be installed meets the current IAAF Performance Standards for Synthetic Surfaced Athletics Tracks (Outdoor).

Part 4 – Materials

4.1 Elastomeric Polyurethane

A. BEYPUR, the two-component U.V. stabilized elastomeric polyurethane compounded from polyol and isocyanate components, based on one hundred percent Methylene Diphenyl Isocyanate (MDI). No Toluene Diisocyanate Isocyanate (TDI) will be allowed.

B. The elastomeric polyurethane shall be red in color.

4.2 EPDM Granulate

A. The EPDM granulates shall be approximately 1 to 3mm in size.

B. The EPDM granulates and the U.V. stabilized elastomeric polyurethane shall be color matched.

4.3 Rubber Granulate

A. Fine mesh Styrene Butadiene Rubber (SBR) processed ground to a graded size not to exceed 20 mesh in size.

B. A maximum of twenty percent, by weight of the SBR will be allowed in the force reduction layer.

4.4 Line Marking Paint

A. Manufacturers recommended pigmented paint.

Part 5 – Installation

5.1 Subbase Requirements

A. Asphalt Compaction

a. The Synthetic Track Surfacing System shall be laid on an approved subbase. The General Contractor shall provide compaction test results of 92-96% for the installed subbase and asphalt surface.

b. For NCAA certification the following criteria must be followed. The track surface, i.e. asphalt substrate, shall not vary from planned cross slope by more than +/- 0.2%, with a maximum lateral slope outside to inside of 1%, and a maximum slope of 0.1% in any running direction. The finished asphalt shall not vary under a 10' straight edge more than 1/8”.

c. It should be the responsibility of the asphalt-paving contractor to flood the surface immediately after the asphalt is capable of handling traffic. If, after 20 minutes of drying time, there are birdbaths evident, it shall be the responsibility of the architect, in conjunction with the surfacing contractor, to determine the method of correction. No cold tar patching, skin patching or sand mix patching will be acceptable.

B. Asphalt Quality

a. No Recycled Asphalt Pavement (RAP) shall be used in the wear course asphalt mix design as the inclusion of RAP as an off-set to virgin asphalt binder results in a brittle hot-mix asphalt (HMA) with significantly lower tensile strength and fatigue resistance. The sports surfacing contractor will not be held responsible for asphalt failures resulting from the inclusion RAP in the HMA mix design of the wear course.

b. Any oil spills (hydraulic, diesel, motor oil, etc.) must be completely removed, either by chipping out or removing and replacing with new, keyed in asphalt. The minimum depth of any asphalt replacement shall be one inch. The curing time for the asphalt base is 28 days. It shall be the responsibility of the surfacing contractor to determine if the asphalt substrate has cured sufficiently prior to the application of polyurethane surfacing system.

C. Responsibility of Others

a. It shall be the responsibility of the general contractor to determine if the asphalt substrate meets all design specifications, i.e. cross slopes, planarity and specific project criteria. After all the above conditions are met, the synthetic surfacing contractor must, in writing, accept the planarity of the asphalt receiving base, before work can commence.

5.2 Thickness

A. Total thickness of the **BSS 1000 Full Pour Dual Durometer** synthetic track surfacing system shall average 13mm.

5.3 Equipment

A. The **BSS 1000 Full Pour Dual Durometer** synthetic track surfacing system components shall be processed and installed by specially designed machinery with automatic electronic portioning, which provides continuous mixing, feeding and finishing for accurate quality controlled installation.

B. No hand mixing is allowed.

5.4 Materials

A. Force Reduction Layer

a. The fine mesh SBR granules and UV stabilized elastomeric polyurethane shall be metered and mixed together on site to regulate the ratio/quantity of SBR, not to exceed fourteen percent in the system and to insure an even distribution of the granules throughout the force reduction layer. No multi-layered systems allowed.

B. Resilient Wearing Layer

a. The 1 to 3 millimeter EPDM granules shall be mechanically integrated with a UV stabilized elastomeric polyurethane to the full depth of the wearing layer. The resilient textured finish shall be a dense matrix of embedded EPDM granules.

5.5 Site Conditions

A. Installation shall not take place if adjacent or concurrent construction generates excessive dust, abrasives or any other by-product that, in the opinion of the installer, would be harmful to the track material, until completion of such works.

B. Apply Synthetic Track Surfacing in dry weather when pavement and atmospheric temperatures are fifty (50) degrees Fahrenheit or above, and are anticipated to remain above fifty (50) degrees Fahrenheit for twenty-four (24) hours after completing application.

C. The maximum temperature cannot exceed 105 degrees at any point during a 24 - hour period.

D. Rain cannot be falling. If there is a threat of rain, work shall cease until dry conditions can be re-established on the track pavement. Work is to proceed only when adequate curing can be guaranteed by the manufacturer.

Part 6 – Line Striping and Event Markings

6.1 Layout

A. Line striping and event markings shall be laid out in accordance with current IAAF and NCAA rules.

6.2 Certification

A. Upon completion of the installation, the owner shall be supplied with all necessary computations and drawings as well as a letter of certification attesting to the accuracy of the markings.

Part 7 – Guarantee

A. Synthetic track surfacing system shall be fully guaranteed against faulty workmanship and material failure for a period of five (5) years from the date of acceptance.

B. Synthetic surfacing material found to be defective as a result of faulty workmanship and/or material failure shall be replaced or repaired at no charge, upon written notification within the guarantee period.

END OF SECTION

BSS 100RE
Structural Spray Resurfacing
Synthetic Track Surfacing System Specifications

Part 1 – General

1.1 Scope

A. The synthetic surfacing contractor shall furnish all labor, materials, equipment, supervision, and services necessary for the proper completion of all **BSS 100RE Structural Spray Resurfacing** and related work indicated on the drawings and specified herein.

B. The synthetic surfacing contractor shall refer to the drawings for the required locations of synthetic track surfacing to be installed. All quantities and dimensions shall be field verified by the synthetic surfacing contractor.

1.2 Specific Scope of Work

A. Install a porous polyurethane synthetic track surface comprised of BEYPUR, a single-component polyurethane structural spray, and EPDM granules.

B. Layout and paint all track lines and event markings as required and specified by current IAAF and NCAA rules.

1.3 Coordination

A. The synthetic surfacing contractor shall coordinate the work specified with an authorized and appointed representative of the owner so as to perform the work during a period and in a manner acceptable to the owner.

Part 2 – Quality Assurance

2.1 Contractor and Manufacturer Qualifications

A. The CONTRACTOR and the MANUFACTURER must be the same.

B. The CONTRACTOR must have a minimum of 10 years' experience in the installation of poured-in-place, two-component elastomeric polyurethane synthetic track surfacing.

C. The CONTRACTOR shall be able to furnish evidence that they have been in business for a period of not less than 3 years, under the present name, and if required, furnish financial statements for each of the past 3 years.

D. The CONTRACTOR must have installed a minimum of 10 outdoor track facilities in the last 2 years using the exact, poured-in-place, two-component elastomeric polyurethane synthetic track resurfacing, as specified herein with the contractor bidding this project.

E. The MANUFACTURER must have a minimum of 10 years of experience with compound two-part polyurethane for athletic surfaces.

F. CONTRACTOR is to provide a list of completed facilities, minimum of 10 which are certified to meet IAAF/NCAA rules & regulations, utilizing the same product as specified.

G. The MANUFACTURER must offer a minimum of six (6) IAAF Certified Track Systems.

H. All polyurethane components must be MANUFACTURED in the United States in an ISO 9001:2008 Certified facility to ensure the highest quality materials.

I. The CONTRACTOR must have installed a minimum of two (2) Class I IAAF Certified outdoor tracks within the United States.

3.2 Submittals

The following submittals must be received with bid submittal:

A. Standard printed specifications of the synthetic track surfacing system to be installed on this project.

B. An affidavit attesting that the synthetic track surfacing material to be installed meets the requirements defined by the manufacturers currently published specifications and any modifications outlined in those technical specifications.

C. A synthetic track surfacing system sample, 12” x 12”in size, of the same synthetic track surfacing system to be installed on this project.

D. A list of completed facilities, including the installing supervisor, of the exact Dual Durometer synthetic track surfacing system

Part 3 – Materials

4.1 EPDM Granules

A. The rubber granules for the BEYPUR structural spray wearing coats shall be EPDM, synthetic rubber containing a minimum 20% EPDM resin, with a specific gravity of 1.5 $\pm$ 0.1 g/cm3. The EPDM rubber shall be the same color as chosen by the owner for the track surface.

4.2 Structural Spray Coating

A. The spray coating shall be BEYPUR, an MDI-based single-component, moisture cured, 100% solids, pigmented polyurethane, specifically formulated for compatibility with EPDM granules. The coating shall be the color specified by the owner. Pigment intergraded in the field shall not be allowed.

4.3 Line Marking Paint

A. Manufacturers recommended pigmented line paint.

Part 4 – Installation

4.1 Surface Preparation

A. Prior to the application of the resurfacing layer, the existing polyurethane surface shall be inspected for conformity to planarity requirements. The surface shall not deviate more than 1/8 inch in 10 feet from the specified grade when checked with a 10-foot straightedge. An impermeable polyurethane surface may also be flooded with water to determine if any “bird baths” or low areas exist.

B. The owner should verify that the surface tolerances meet all specifications issued by the appropriate sanctioning or governing body such as IAAF, NCAA, NFSHSA, TAC, etc.

C. The area to be surfaced shall be clean and free of any loose or foreign particles (dirt, oil, etc.) prior to the commencement of work. The surface is usually cleaned by use of a power blower and high-pressure washer.

4.2 Thickness

A. The thickness of the **BSS 100RE Structural Spray** shall be 2-3mm.

4.3 Equipment

A. The **BSS 100RE Structural Spray Resurfacing** components shall be processed and installed by specially designed machinery and equipment. The wearing course shall be installed using automatic electronic portioning, which provides continuous mixing and feeding for an accurate, quality controlled installation.

4.4 Installation

A. Structural Spray Course

The 0.5 to 1.5 millimeter EPDM granules shall be mixed with BEYPUR, the single-component structural spray coating. The structural spray shall be made in two (2) uniform applications.

4.5 Site Conditions

B. Installation shall not take place if adjacent or concurrent construction generates excessive dust, abrasives or any other by-product that, in the opinion of the installer, would be harmful to the track material, until completion of such works.

C. If, in the opinion of the installer of the synthetic material, the weather and/or climatic conditions are detrimental to the proper installation of the surfacing materials, work shall be delayed until conditions are acceptable. Preferred installation temperature is fifty degrees Fahrenheit and rising. Installation shall be executed only in dry conditions.

Part 5 – Line Striping and Event Markings

5.1 Layout

A. Line striping and event markings shall be laid out in accordance with current IAAF and NCAA rules.

5.2 Certification

A. Upon completion of the installation, the owner shall be supplied with all necessary computations and drawings as well as a letter of certification attesting to the accuracy of the markings.

Part 6 – Guarantee

A. Synthetic track surfacing system shall be fully guaranteed against faulty workmanship and material failure for a period of five (5) years from the date of acceptance.

B. Synthetic surfacing material found to be defective as a result of faulty workmanship and/or material failure shall be replaced or repaired at no charge, upon written notification within the guarantee period.

END OF SECTION

BEYNON
A Tarkett Sports Company

BSS 200
Impermeable Basemat with Structural Spray
Synthetic Track Surfacing System Specifications

Part I - General

1.1 Scope

A. The synthetic surfacing contractor shall furnish all labor, materials, equipment, supervision, and services necessary for the proper completion of all **BSS 200** Synthetic Track Surfacing and related work indicated on the drawings and specified herein.

B. The synthetic surfacing contractor shall refer to the drawings for the required locations of synthetic track surfacing to be installed. All quantities and dimensions shall be field verified by the synthetic surfacing contractor.

1.2 Specific Scope of Work

A. Install an impermeable polyurethane synthetic track system comprised of a base layer of polyurethane bound SBR rubber granules, BEYPUR 200, an impermeable layer (seal coat) of a two-component urethane, and topped with BEYPUR, a spray-applied coating of single-component polyurethane, and EPDM granules.

B. Layout and paint all track lines and event markings as required and specified by current IAAF and NCAA rules.

1.3 Coordination

A. The synthetic surfacing contractor shall coordinate the work specified with an authorized and appointed representative of the owner so as to perform the work during a period and in a manner acceptable to the owner.

Part 2 - Codes and Standards

1.1 Applicable Publications

B. Codes and standards follow the current guidelines set forth by the International Amateur Athletic Federation (IAAF) and the National Collegiate Athletic Association (NCAA), along with the current material testing

BEYNON
A Tarkett Sports Company

guidelines as published by the American Society of Testing and Materials (ASTM).

2.2 Performance Standards

The **BSS 200** synthetic track surfacing system shall exhibit the following minimum performance standards (ASTM):

A.	Thickness:	(12-13mm) or as specified
B.	Force Reduction:	35-50%
C.	Vertical Deformation:	0.6mm-2.5mm
D.	Coefficient of Friction:	≥ 0.5 (47 TRRL Scale)
E.	Tensile Strength:	≥ 0.5 Mpa
F.	Elongation:	≥ 40%

Part 3 - Quality Assurance

3.1 Contractor and Manufacturer Qualifications

A. The CONTRACTOR and the MANUFACTURER must be the same.

B. The CONTRACTOR must have a minimum of 10 years experience in the installation of poured-in-place, two-component elastomeric polyurethane synthetic track surfacing.

C. The CONTRACTOR shall be able to furnish evidence that they have been in business for a period of not less than 3 years, under the present name, and if required, furnish financial statements for each of the past 3 years.

D. The CONTRACTOR must have installed a minimum of 10 outdoor track facilities in the last 2 years using the exact, IAAF certified, synthetic track surfacing, as specified herein with the contractor bidding this project.

E. The MANUFACTURER must have a minimum of 10 years of experience with compound two-part polyurethane for athletic surfaces.

F. The CONTRACTOR is required to provide documentation that shows the selected specified and installed product meets current IAAF Performance Standards for Synthetic Surfaced Athletics Tracks (Outdoor) and is certified in terms of the IAAF certification system as updated to present day.

G. CONTRACTOR is to provide a list of completed facilities, minimum of 10 which are certified to meet IAAF/NCAA rules & regulations, utilizing the same product as specified.

H. The MANUFACTURER must offer a minimum of seven (7) IAAF Certified Track Systems.

I. All polyurethane components must be MANUFACTURED in the United States in an **ISO 9001:2008 Certified** facility to ensure the highest quality materials.

J. The CONTRACTOR must have installed a minimum of three (3) Class I IAAF Certified outdoor tracks within the United States.

3.2 Submittals

The following submittals must be received with bid submittal:

A. Standard printed specifications of the synthetic track surfacing system to be installed on this project.

B. An affidavit attesting that the synthetic track surfacing material to be installed meets the requirements defined by the manufacturers currently published specifications and any modifications outlined in those technical specifications.

C. A synthetic track surfacing system sample, 12” x 12”in size, of the same synthetic track surfacing system to be installed on this project.

D. A list of completed facilities, including the installing supervisor, of the exact synthetic track surfacing system.

E. A current IAAF Certificate proving the product to be installed meets the current IAAF Performance Standards for Synthetic Surfaced Athletics Tracks (Outdoor).

Part 4 - Materials

4.1 Primers

A. Primers must be polyurethane-based, specifically formulated to be compatible with the paved SBR base and track surfacing material.

4.2 Black SBR Granules

A. The rubber granules for the base mat shall be recycled SBR rubber, processed and chopped to 1-3mm size, containing less than 1% dust.

4.3 EPDM Granules

A. The rubber granules for the BEYPUR structural spray wearing coats shall be EPDM, synthetic rubber containing a minimum 20% EPDM resin, with a specific gravity of 1.5 $\pm$ 0.1 g/cm3. The EPDM rubber shall be the same color as chosen by the owner for the track surface.

4.4 Polyurethane Binder

A. Binder for the black mat shall be BEYPUR, an MDI-based single-component, polyurethane binding agent. The binder shall not have a free TDI monomer level above 0.2% and must be solvent free. The binder must be specially formulated for compatibility with SBR rubber crumb.

4.5 Structural Spray Coating

A. The spray coating shall be BEYPUR, an MDI-based single-component, moisture cured, 100% solids, pigmented polyurethane, specifically formulated for compatibility with EPDM granules. The coating shall be the color specified by the owner. Pigment intergraded in the field shall not be allowed.

4.6 Seal Coat

A. BEYPUR 200, the two-component polyurethane resin for this application, shall be pigmented to match the color of the wear coat. The material shall be applied by a squeegee to insure that the black mat is sealed.

4.7 Line Marking Paint

A. All line and event markings shall be applied by experienced personnel the manufacturers recommended pigmented paint compatible with the synthetic track surfacing.

Part 5 - Installation

5.1 Subbase Requirements

A. Asphalt Compaction

a. The Synthetic Track Surfacing System shall be laid on an approved subbase. The General Contractor shall provide compaction test results of 92-96% for the installed subbase and asphalt surface.

b. For NCAA certification the following criteria must be followed. The track surface, i.e. asphalt substrate, shall not vary from planned cross slope by more than +/- 0.2%, with a maximum lateral slope outside to inside of 1%, and a maximum slope of 0.1% in any running direction. The finished asphalt shall not vary under a 10' straight edge more than 1/8".

c. It should be the responsibility of the asphalt-paving contractor to flood the surface immediately after the asphalt is capable of handling traffic. If, after 20 minutes of drying time, there are birdbaths evident, it shall be the responsibility of the architect, in conjunction with the surfacing contractor, to determine the method of correction. No cold tar patching, skin patching or sand mix patching will be acceptable.

B. Asphalt Quality

a. No Recycled Asphalt Pavement (RAP) shall be used in the wear course asphalt mix design as the inclusion of RAP as an off-set to virgin asphalt binder results in a brittle hot-mix asphalt (HMA) with significantly lower tensile strength and fatigue resistance. The sports surfacing contractor will not be held responsible for asphalt failures resulting from the inclusion RAP in the HMA mix design of the wear course.

b. Any oil spills (hydraulic, diesel, motor oil, etc.) must be completely removed, either by chipping out or removing and replacing with new, keyed in asphalt. The minimum depth of any asphalt replacement shall be one inch. The curing time for the asphalt base is 28 days. It shall be the responsibility of the surfacing contractor to determine if the asphalt substrate has cured sufficiently prior to the application of polyurethane surfacing system.

C. Responsibility of Others

a. It shall be the responsibility of the general contractor to determine if the asphalt substrate meets all design specifications, i.e. cross slopes, planarity and specific project criteria. After all the above conditions are met, the synthetic surfacing contractor must, in writing, accept the planarity of the asphalt receiving base, before work can commence.

5.2 Thickness

A. The thickness of the **BSS 200** Synthetic Track Surfacing System shall be 13mm.

5.3 Equipment

A. The **BSS 200** Synthetic Track Surfacing System components shall be processed and installed by specially designed machinery and equipment. A mechanically operated paver with variable regulated speed and thermostatically controlled screed shall be used in the installation of the base mat. The wearing course shall be installed using automatic electronic portioning, which provides continuous mixing and feeding for an accurate, quality controlled installation.

B. No hand mixing is allowed.

5.4 Installation

A. Base Course

The SBR granules and BEYPUR shall be mixed together on site to regulate the ratio/quantity of SBR, not to exceed 82% by weight in the base mat portion of the system. The BEYPUR shall be mixed with the SBR rubber so that a minimum of 20%, by weight, exists in the final mixture. This mixture is then mechanically installed using the paver.

B. Seal Coat

The two BEYPUR 200 components are mixed at the prescribed ratio homogeneously with a suitable mixing device. The coating is squeegee applied to the base mat, making it impermeable.

C. Wearing Course

The 0.5 to 1.5mm EPDM granules shall be mixed with BEYPUR, the single-component structural spray coating. The structural spray shall be made in two uniform applications.

5.5 Site Conditions

A. Installation shall not take place if adjacent or concurrent construction generates excessive dust, abrasives or any other by-product that, in the opinion of the installer, would be harmful to the track material, until completion of such works.

B. Apply Synthetic Track Surfacing in dry weather when pavement and atmospheric temperatures are fifty (50) degrees Fahrenheit or above, and are anticipated to remain above fifty (50) degrees Fahrenheit for twenty-four (24) hours after completing application.

C. The maximum temperature cannot exceed 105 degrees at any point during a 24 - hour period.

D. Rain cannot be falling. If there is a threat of rain, work shall cease until dry conditions can be re-established on the track pavement. Work is to proceed only when adequate curing can be guaranteed by the manufacturer.

Part 6 - Line Striping and Event Markings

6.1 Layout

A. Line striping and event markings shall be laid out in accordance with current IAAF and NCAA rules.

6.2 Certification

A. Upon completion of the installation, the owner shall be supplied with all necessary computations and drawings as well as a letter of certification attesting to the accuracy of the markings.

Part 7 - Guarantee

A. Synthetic track surfacing system shall be fully guaranteed against faulty workmanship and material failure for a period of five (5) years from the date of acceptance.

B. Synthetic surfacing material found to be defective as a result of faulty workmanship and/or material failure shall be replaced or repaired at no charge, upon written notification within the guarantee period

END OF SECTION

BEYNON
A Tarkett Sports Company

BSS 2000
13mm Embedded
Synthetic Track Surfacing System Specifications

Part 1 – General

1.1 Scope

A. The synthetic surfacing contractor shall furnish all labor, materials, equipment, supervision and services necessary for the proper completion of the **BSS 2000 Full Pour** synthetic track surfacing and related work indicated on the drawings and specified herein.

B. The synthetic surfacing contractor shall refer to the drawings for the required locations of synthetic track surfacing to be installed. All quantities and dimensions shall be field verified by the synthetic surfacing contractor.

1.2 Specific Scope of Work

A. Install a full depth poured-in-place two-component, UV stabilized elastomeric polyurethane Dual Durometer synthetic surfacing system with embedded textured finish that has been certified by the IAAF.

B. Layout and paint all track lines and event markings as required and specified by current IAAF and NCAA rules.

1.3 Coordination

A. The synthetic surfacing contractor shall coordinate the work specified with an authorized and appointed representative of the owner so as to perform the work during a period and in a manner acceptable to the owner.

Part 2 – Codes and Standards

2.1 Applicable Publications

A. Codes and standards follow the current guidelines set forth by the International Amateur Athletic Federation (IAAF) and the National Collegiate Athletic Association (NCAA), along with the current material testing guidelines as published by the American Society of Testing and Materials (ASTM).

BEYNON
A Tarkett Sports Company

2.2 Performance Standards

The new synthetic track surfacing system shall exhibit the following minimum performance standards as required by IAAF:

A.	Thickness:	13mm or as specified
B.	Force Reduction:	35-50%
C.	Vertical Deformation:	0.6mm-2.5mm
D.	Coefficient of Friction:	≥ 0.5 (47 TRRL Scale)
E.	Tensile Strength:	≥ 0.5 Mpa
F.	Elongation:	≥ 40%

Part 3 - Quality Assurance

3.1 Contractor and Manufacturer Qualifications

A. The CONTRACTOR and the MANUFACTURER must be the same.

B. The CONTRACTOR must have a minimum of 10 years experience in the installation of poured-in-place, two-component elastomeric polyurethane synthetic track surfacing.

C. The CONTRACTOR shall be able to furnish evidence that they have been in business for a period of not less than 3 years, under the present name, and if required, furnish financial statements for each of the past 3 years.

D. The CONTRACTOR must have installed a minimum of 10 outdoor track facilities in the last 2 years using the exact, IAAF certified, poured-in-place, two-component elastomeric polyurethane synthetic track surfacing, as specified herein with the contractor bidding this project.

E. The MANUFACTURER must have a minimum of 10 years of experience with compound two-part polyurethane for athletic surfaces.

F. The CONTRACTOR is required to provide documentation that shows the selected specified and installed product meets current IAAF Performance Standards for Synthetic Surfaced Athletics Tracks (Outdoor) and is certified in terms of the IAAF certification system as updated to present day.

G. CONTRACTOR is to provide a list of completed facilities, minimum of 10 which are certified to meet IAAF/NCAA rules & regulations, utilizing the same product as specified.

H. The MANUFACTURER must offer a minimum of seven (7) IAAF Certified Track Systems.

I. All polyurethane components must be MANUFACTURED in the United States at the headquarters of the CONTRACTOR.

J. All Polyurethane components must be MANUFACTURED in an ISO 9001 Certified facility.

K. The CONTRACTOR must have installed a minimum of three (3) Class I IAAF Certified outdoor tracks within the United States.

3.2 Submittals

The following submittals must be received with bid submittal:

A. Standard printed specifications of the synthetic track surfacing system to be installed on this project.

B. An affidavit attesting that the synthetic track surfacing material to be installed meets the requirements defined by the manufacturers currently published specifications and any modifications outlined in those technical specifications.

C. A synthetic track surfacing system sample, 12” x 12”in size, of the same synthetic track surfacing system to be installed on this project.

D. A list of completed facilities, including the installing supervisor, of the exact Dual Durometer synthetic track surfacing system.

E. A current IAAF Certificate proving the product to be installed meets the current IAAF Performance Standards for Synthetic Surfaced Athletics Tracks (Outdoor).

Part 4 – Materials

4.1 Elastomeric Polyurethane

A. BEYPUR, the two-component U.V. stabilized elastomeric polyurethane compounded from polyol and isocyanate components, based on one hundred percent Methylene Diphenyl Isocyanate (MDI). No Toluene Diisocyanate Isocyanate (TDI) will be allowed.

B. The elastomeric polyurethane shall be red in color.

4.2 EPDM Granulate

A. The EPDM granulates shall be approximately 1 to 3mm in.

B. The EPDM granulates and the U.V. stabilized elastomeric polyurethane shall be color matched.

4.3 Rubber Granulate

A. Red butyl rubber processed ground to a graded size not to exceed .5 – 1.0mm.

B. A maximum of twenty percent, by weight, of the butyl rubber will be allowed in the force reduction layer.

4.6 Line Marking Paint

A. Manufacturers recommended pigmented line paint.

Part 5 – Installation

5.1 Subbase Requirements

A. Asphalt Compaction

a. The Synthetic Track Surfacing System shall be laid on an approved subbase. The General Contractor shall provide compaction test results of 92-96% for the installed subbase and asphalt surface.

b. For NCAA certification the following criteria must be followed. The track surface, i.e. asphalt substrate, shall not vary from planned cross slope by more than +/- 0.2%, with a maximum lateral slope outside to inside of 1%, and a maximum slope of 0.1% in any running direction. The finished asphalt shall not vary under a 10' straight edge more than 1/8”.

c. It should be the responsibility of the asphalt-paving contractor to flood the surface immediately after the asphalt is capable of handling traffic. If, after 20 minutes of drying time, there are birdbaths evident, it shall be the responsibility of the architect, in conjunction with the surfacing contractor, to determine the method of correction.

No cold tar patching, skin patching or sand mix patching will be acceptable.

B. Asphalt Quality

a. No Recycled Asphalt Pavement (RAP) shall be used in the wear course asphalt mix design as the inclusion of RAP as an off-set to virgin asphalt binder results in a brittle hot-mix asphalt (HMA) with significantly lower tensile strength and fatigue resistance. The sports surfacing contractor will not be held responsible for asphalt failures resulting from the inclusion RAP in the HMA mix design of the wear course.

b. Any oil spills (hydraulic, diesel, motor oil, etc.) must be completely removed, either by chipping out or removing and replacing with new, keyed in asphalt. The minimum depth of any asphalt replacement shall be one inch. The curing time for the asphalt base is 28 days. It shall be the responsibility of the surfacing contractor to determine if the asphalt substrate has cured sufficiently prior to the application of polyurethane surfacing system.

C. Responsibility of Others

a. It shall be the responsibility of the general contractor to determine if the asphalt substrate meets all design specifications, i.e. cross slopes, planarity and specific project criteria. After all the above conditions are met, the synthetic surfacing contractor must, in writing, accept the planarity of the asphalt receiving base, before work can commence.

5.2 Thickness

A. Total thickness of the **BSS 2000 Full Pour Embedded** synthetic track surfacing system shall average 13mm.

5.3 Equipment

A. The **BSS 2000 Full Pour Embedded** synthetic track surfacing system components shall be processed and installed by specially designed machinery with automatic electronic portioning, which provides continuous mixing, feeding and finishing for accurate quality controlled installation.

B. No hand mixing is allowed.

5.4 Materials

A. Force Reduction Layer

The red butyl granules and UV stabilized elastomeric polyurethane shall be metered and mixed together on site to regulate the ratio/quantity of butyl, not to exceed fourteen percent in the system and to insure an even distribution of the granules throughout the force reduction layer. No multi-layered systems allowed.

B. Resilient Wearing Layer

The 1 to 3 millimeter EPDM granules shall be mechanically integrated with a UV stabilized elastomeric polyurethane to the full depth of the wearing layer. The resilient textured finish shall be a dense matrix of embedded EPDM granules.

5.5 Site Conditions

A. Installation shall not take place if adjacent or concurrent construction generates excessive dust, abrasives or any other by-product that, in the opinion of the installer, would be harmful to the track material, until completion of such works.

B. Apply Synthetic Track Surfacing in dry weather when pavement and atmospheric temperatures are fifty (50) degrees Fahrenheit or above, and are anticipated to remain above fifty (50) degrees Fahrenheit for twenty-four (24) hours after completing application.

C. The maximum temperature cannot exceed 105 degrees at any point during a 24 - hour period.

D. Rain cannot be falling. If there is a threat of rain, work shall cease until dry conditions can be re-established on the track pavement. Work is to proceed only when adequate curing can be guaranteed by the manufacturer.

Part 6 – Line Striping and Event Markings

6.1 Layout

A. Line striping and event markings shall be laid out in accordance with current IAAF and NCAA rules.

6.2 Certification

A. Upon completion of the installation, the owner shall be supplied with all necessary computations and drawings as well as a letter of certification attesting to the accuracy of the markings.

Part 7 – Guarantee

A. Synthetic track surfacing system shall be fully guaranteed against faulty workmanship and material failure for a period of five (5) years from the date of acceptance.

B. Synthetic surfacing material found to be defective as a result of faulty workmanship and/or material failure shall be replaced or repaired at no charge, upon written notification within the guarantee period.

END OF SECTION

BSS 2000RE
Embedded Resurfacing
Synthetic Track Surfacing System Specifications

Part 1 – General

1.1 Scope

A. The synthetic surfacing contractor shall furnish all labor, materials, equipment, supervision and services necessary for the proper completion of the **BSS 2000RE Embedded Resurfacing** synthetic track system and related work indicated on the drawings and specified herein.

B. The synthetic surfacing contractor shall refer to the drawings for the required locations of synthetic track surfacing to be installed. All quantities and dimensions shall be field verified by the synthetic surfacing contractor.

1.2 Specific Scope of Work

A. Install a full depth poured-in-place two-component, UV stabilized elastomeric polyurethane synthetic resurfacing system with Hobart textured finish.

B. Layout and paint all track lines and event markings as required and specified by current IAAF and NCAA rules.

1.3 Coordination

A. The synthetic surfacing contractor shall coordinate the work specified with an authorized and appointed representative of the owner so as to perform the work during a period and in a manner acceptable to the owner.

Part 2 - Quality Assurance

2.1 Contractor and Manufacturer Qualifications

A. The CONTRACTOR and the MANUFACTURER must be the same.

B. The CONTRACTOR must have a minimum of 10 years experience in the installation of poured-in-place, two-component elastomeric polyurethane synthetic track surfacing.

C. The CONTRACTOR shall be able to furnish evidence that they have been in business for a period of not less than 3 years, under the present name, and if required, furnish financial statements for each of the past 3 years.

D. The CONTRACTOR must have installed a minimum of 10 outdoor track facilities in the last 2 years using the exact, poured-in-place, two-component elastomeric polyurethane synthetic track resurfacing, as specified herein with the contractor bidding this project.

E. The MANUFACTURER must have a minimum of 10 years of experience with compound two-part polyurethane for athletic surfaces.

F. CONTRACTOR is to provide a list of completed facilities, minimum of 10 which are certified to meet IAAF/NCAA rules & regulations, utilizing the same product as specified.

G. The MANUFACTURER must offer a minimum of six (6) IAAF Certified Track Systems.

H. All polyurethane components must be MANUFACTURED in an ISO 9001 Certified facility.

I. All polyurethane components must be MANUFACTURED in the United States at the headquarters of the CONTRACTOR.

J. The CONTRACTOR must have installed a minimum of two (2) Class I IAAF Certified outdoor tracks within the United States.

2.2 Submittals

The following submittals must be received with bid submittal:

A. Standard printed specifications of the synthetic track surfacing system to be installed on this project.

B. An affidavit attesting that the synthetic track surfacing material to be installed meets the requirements defined by the manufacturers currently published specifications and any modifications outlined in those technical specifications.

C. A synthetic track surfacing system sample, 12” x 12”in size, of the same synthetic track surfacing system to be installed on this project.

D. A list of completed facilities, including the installing supervisor, of the exact Dual Durometer synthetic track surfacing system.

Part 3 – Materials

3.1 Elastomeric Polyurethane

A. BEYPUR, the two-component U.V. stabilized elastomeric polyurethane compounded from polyol and isocyanate components, based on one hundred percent Methylene Diphenyl Isocyanate (MDI). No Toluene Diisocyanate Isocyanate (TDI) will be allowed.

B. The elastomeric polyurethane shall be red in color.

3.2 EPDM Granulate

A. The EPDM granulates shall be approximately 1 to 3mm in size.

B. The EPDM granulates and the U.V. stabilized elastomeric polyurethane shall be color matched.

3.3 Line Marking Paint

A. Manufacturers recommended pigmented paint.

Part 4 – Installation

4.1 Surface Preparation

A. Prior to the application of the resurfacing layer, the existing polyurethane surface shall be inspected for conformity to planarity requirements. The surface shall not deviate more than 1/8 inch in 10 feet from the specified grade when checked with a 10-foot straightedge. An impermeable polyurethane surface may also be flooded with water to determine if any “bird baths” or low areas exist.

B. The owner should verify that the surface tolerances meet all specifications issued by the appropriate sanctioning or governing body such as IAAF, NCAA, NFSHSA, TAC, etc.

C. The area to be surfaced shall be clean and free of any loose or foreign particles (dirt, oil, etc.) prior to the commencement of work. The surface is usually cleaned by use of a power blower and high-pressure washer.

4.2 Thickness

A. Total thickness of the **BSS 2000RE Embedded Resurfacing** synthetic track system shall average 7mm.

4.3 Equipment

A. The **BSS 2000RE Embedded Resurfacing** synthetic track system components shall be processed and installed by specially designed machinery with automatic electronic portioning, which provides continuous mixing, feeding and finishing for accurate quality controlled installation.

B. No hand mixing is allowed.

4.4 Materials

A. Leveling Layer

The 2mm leveling layer material shall be two-component polyurethane that is self-leveling, compounded from a proprietary pigmented polyol and MDI based, "TDI Free," isocyanate and designed to patch and bond existing track and field surfaces to the original substrate and level low areas of the existing surface. The liquid polyurethane shall contain no mercury, lead, or any other heavy metals added by design.

B. Resurfacing Layer

The 1 to 3 millimeter EPDM granules shall be mechanically integrated with a UV stabilized elastomeric polyurethane to the full depth of the 5mm resurfacing. The resilient wear layer textured finish shall be a dense matrix of embedded EPDM granules.

4.5 Site Conditions

A. Installation shall not take place if adjacent or concurrent construction generates excessive dust, abrasives or any other by-product that, in the opinion of the installer, would be harmful to the track material, until completion of such works.

B. Apply Synthetic Track Surfacing in dry weather when the existing surface and atmospheric temperatures are fifty (50) degrees Fahrenheit or above, and are anticipated to remain above fifty (50) degrees Fahrenheit for twenty-four (24) hours after completing application.

C. The maximum temperature cannot exceed 105 degrees at any point during a 24 - hour period.

D. Rain cannot be falling. If there is a threat of rain, work shall cease until dry conditions can be re-established on the track surface. Work is to proceed only when adequate curing can be guaranteed by the manufacturer.

Part 5 – Line Striping and Event Markings

5.1 Layout

A. Line striping and event markings shall be laid out in accordance with current IAAF and NCAA rules.

5.2 Certification

A. Upon completion of the installation, the owner shall be supplied with all necessary computations and drawings as well as a letter of certification attesting to the accuracy of the markings.

Part 6 – Guarantee

A. Synthetic track surfacing system shall be fully guaranteed against faulty workmanship and material failure for a period of five (5) years from the date of acceptance.

B. Synthetic surfacing material found to be defective as a result of faulty workmanship and/or material failure shall be replaced or repaired at no charge, upon written notification within the guarantee period.

END OF SECTION

BSS 300
Embedded Polyurethane Sandwich
Synthetic Track Surfacing System Specifications

Part 1 – General

1.1 Scope

A. The synthetic surfacing contractor shall furnish all labor, materials, equipment, supervision and services necessary for the proper completion of the **BSS 300** Synthetic Track Surfacing System and related work indicated on the drawings and specified herein.

B. The synthetic surfacing contractor shall refer to the drawings for the required locations of synthetic track surfacing to be installed. All quantities and dimensions shall be field verified by the synthetic surfacing contractor.

1.2 Specific Scope of Work

A. Install an IAAF approved, impermeable polyurethane synthetic track system consisting of SBR Rubber and BEYPUR, a single-component polyurethane binder and BEYPUR, a poured-in-place, two-component U.V. stabilized elastomeric polyurethane wearing layer with an embedded textured finish.

B. Layout and paint all track lines and event markings as required and specified by current IAAF and NCAA rules.

1.3 Coordination

A. The synthetic surfacing contractor shall coordinate the work specified with an authorized and appointed representative of the owner so as to perform the work during a period and in a manner acceptable to the owner.

Part 2 – Codes and Standards

2.1 Applicable Publications

A. Codes and standards follow the current guidelines set forth by the International Amateur Athletic Federation (IAAF) and the National Collegiate Athletic Association (NCAA), along with the current material testing guidelines as published by the American Society of Testing and Materials (ASTM).

2.2 Performance Standards

The BSS 300 synthetic track surfacing system shall exhibit the following minimum performance standards as required by IAAF:

A.	Thickness:	(12-13mm) or as specified
B.	Force Reduction	35-50%
C.	Vertical Deformation:	0.6mm-2.5mm
D.	Coefficient of Friction:	≥ 0.5 (47 TRRL Scale)
E.	Tensile Strength:	≥ 0.5 Mpa
F.	Elongation:	≥ 40%

Part 3 – Quality Assurance

3.1 Contractor and Manufacturer Qualifications

A. The CONTRACTOR and the MANUFACTURER must be the same.

B. The CONTRACTOR must have a minimum of 10 years experience in the installation of poured-in-place, two-component elastomeric polyurethane synthetic track surfacing.

C. The CONTRACTOR shall be able to furnish evidence that they have been in business for a period of not less than 3 years, under the present name, and if required, furnish financial statements for each of the past 3 years.

D. The CONTRACTOR must have installed a minimum of 10 outdoor track facilities in the last 2 years using the exact, IAAF certified, synthetic track surfacing, as specified herein with the contractor bidding this project.

E. The MANUFACTURER must have a minimum of 10 years of experience with compound two-part polyurethane for athletic surfaces.

F. The CONTRACTOR is required to provide documentation that shows the selected specified and installed product meets current IAAF Performance Standards for Synthetic Surfaced Athletics Tracks (Outdoor) and is certified in terms of the IAAF certification system as updated to present day.

G. CONTRACTOR is to provide a list of completed facilities, minimum of 10 which are certified to meet IAAF/NCAA rules & regulations, utilizing the same product as specified.

H. The MANUFACTURER must offer a minimum of six (6) IAAF Certified Track Systems.

I. All polyurethane components must be MANUFACTURED in the United States in an **ISO 9001:2008 Certified** facility to ensure the highest quality materials.

J. The CONTRACTOR must have installed a minimum of two (2) Class I IAAF Certified outdoor tracks within the United States.

3.2 Submittals

The following submittals must be received with bid submittal:

A. Standard printed specifications of the synthetic track surfacing system to be installed on this project.

B. An affidavit attesting that the synthetic track surfacing material to be installed meets the requirements defined by the manufacturers currently published specifications and any modifications outlined in those technical specifications.

C. A synthetic track surfacing system sample, 12” x 12”in size, of the same synthetic track surfacing system to be installed on this project.

D. A list of completed facilities, including the installing supervisor, of the exact synthetic track surfacing system.

E. A current IAAF Certificate proving the product to be installed meets the current IAAF Performance Standards for Synthetic Surfaced Athletics Tracks (Outdoor).

Part 4 – Materials

4.1 Elastomeric Polyurethane

A. BEYPUR, the two-component U.V. stabilized elastomeric polyurethane compounded from polyol and isocyanate components, based on one hundred percent (100%) Methylene Diphenyl Isocyanate (MDI). No Toluene Diisocyanate Isocyanate (TDI) will be allowed.

B. The elastomeric polyurethane shall be red in color.

4.2 EPDM Granulate

A. The EPDM granulates shall be approximately 1 to 3mm in size

B. The EPDM granulates and the U.V. stabilized elastomeric polyurethane shall be color matched.

4.3 Rubber Granulate of the base course

A. Styrene Butadiene Rubber (SBR) processed ground to a graded size of 1-3mm.

B. A maximum of 82%, by weight of the paved-in-place base layer, of SBR will be allowed.

4.4 Single Component Polyurethane Binder

A. This binder shall be BEYPUR 300, a single-component polyurethane binder with a long cure time for use in paved mat specifications; a minimum of 18%, by weight of the paved-in-place base layer.

4.5 Seal Coat

A. This seal coat shall be BEYPUR 200, a two-component polyurethane pore sealer use with paved rubber granule mats. The granular SBR and binder layer shall be sealed with the BEYPUR 200. The application of EPDM dust is not allowed.

4.6 Line Marking Paint

A. Manufacturers recommended pigmented line paint.

Part 5 – Installation

5.1 Subbase Requirements

A. Asphalt Compaction

a. The Synthetic Track Surfacing System shall be laid on an approved subbase. The General Contractor shall provide compaction test results of 92-96% for the installed subbase and asphalt surface.

b. For NCAA certification the following criteria must be followed. The track surface, i.e. asphalt substrate, shall not vary from planned cross

slope by more than +/- 0.2%, with a maximum lateral slope outside to inside of 1%, and a maximum slope of 0.1% in any running direction. The finished asphalt shall not vary under a 10' straight edge more than 1/8”.

c. It should be the responsibility of the asphalt-paving contractor to flood the surface immediately after the asphalt is capable of handling traffic. If, after 20 minutes of drying time, there are birdbaths evident, it shall be the responsibility of the architect, in conjunction with the surfacing contractor, to determine the method of correction. No cold tar patching, skin patching or sand mix patching will be acceptable.

B. Asphalt Quality

a. No Recycled Asphalt Pavement (RAP) shall be used in the wear course asphalt mix design as the inclusion of RAP as an off-set to virgin asphalt binder results in a brittle hot-mix asphalt (HMA) with significantly lower tensile strength and fatigue resistance. The sports surfacing contractor will not be held responsible for asphalt failures resulting from the inclusion RAP in the HMA mix design of the wear course.

b. Any oil spills (hydraulic, diesel, motor oil, etc.) must be completely removed, either by chipping out or removing and replacing with new, keyed in asphalt. The minimum depth of any asphalt replacement shall be one inch. The curing time for the asphalt base is 28 days. It shall be the responsibility of the surfacing contractor to determine if the asphalt substrate has cured sufficiently prior to the application of polyurethane surfacing system.

C. Responsibility of Others

a. It shall be the responsibility of the general contractor to determine if the asphalt substrate meets all design specifications, i.e. cross slopes, planarity and specific project criteria. After all the above conditions are met, the synthetic surfacing contractor must, in writing, accept the planarity of the asphalt receiving base, before work can commence.

5.2 Thickness

A. The thickness of the **BSS 300** Synthetic Track Surfacing System shall be 13mm.

5.3 Equipment

A. The **BSS 300** Synthetic Track Surfacing System components shall be processed and installed by specially designed machinery and equipment. A mechanically operated paver with variable regulated speed and thermostatically controlled screed shall be used in the installation of the base mat. The wearing course shall be installed using automatic electronic portioning, which provides continuous mixing and feeding for an accurate, quality controlled installation.

B. No hand mixing is allowed.

5.4 Installation

A. Base Course

The SBR granules and BEYPUR 300 shall be mixed together on site to regulate the ratio/quantity of SBR, not to exceed 82% in the base mat portion of the system. The BEYPUR 300 shall be mixed with the SBR rubber so that a minimum of 20%, by weight, exists in the final mixture. This mixture is then mechanically installed using the paver.

B. Seal Coat

The two BEYPUR 200 components are mixed at the prescribed ratio homogeneously with a suitable mixing device. The coating is squeegee applied to the base mat, making it impermeable.

C. Wearing Course

The 1 to 3mm EPDM granules shall be integrated into the BEYPUR to achieve the full depth of the 5 mm wearing course. The resilient embedded textured finish shall be a dense matrix of exposed EPDM granules. The homogeneous wearing course shall be applied in situ with the base course.

5.5 Site Conditions

A. Installation shall not take place if adjacent or concurrent construction generates excessive dust, abrasives or any other by-product that, in the opinion of the installer, would be harmful to the track material, until completion of such works.

B. Apply Synthetic Track Surfacing in dry weather when pavement and atmospheric temperatures are fifty (50) degrees Fahrenheit or above, and are anticipated to remain above fifty (50) degrees Fahrenheit for twenty-four (24) hours after completing application.

C. The maximum temperature cannot exceed 105 degrees at any point during a 24 - hour period.

D. Rain cannot be falling. If there is a threat of rain, work shall cease until dry conditions can be re-established on the track pavement. Work is to proceed only when adequate curing can be guaranteed by the manufacturer.

Part 6 – Line Striping and Event Markings

6.1 Layout

A. Line striping and event markings shall be laid out in accordance with current IAAF and NCAA rules.

6.2 Certification

A. Upon completion of the installation, the owner shall be supplied with all necessary computations and drawings as well as a letter of certification attesting to the accuracy of the markings.

Part 7 – Guarantee

A. The BSS 300 Synthetic Track Surfacing System shall be fully guaranteed against faulty workmanship and material failure for a period of five (5) years from the date of acceptance.

B. Synthetic surfacing material found to be defective as a result of faulty workmanship and/or material failure shall be replaced or repaired at no charge, upon written notification within the guarantee period.

END OF SECTION

CUSHIONED ACRYLIC SURFACING
FOR TENNIS COURTS AND PLAY AREAS

PART 1 GENERAL

1.1 GENERAL DESCRIPTION

A. Cushioned Acrylic Surfacing for asphalt tennis courts and similar play areas.

1.2 RELATED SECTIONS

A. Related Work

1. Asphalt concrete pavement (sec _____)
2. Court marking for tennis courts (sec _____)
3. Athletic equipment (sec _____)

B. References

1. National Asphalt Paving Association (NAPA)
2. United States Tennis Association (USTA)
3. International Tennis Federation (ITF)
4. American Sport Builders Association (ASBA)

1.3 QUALITY ASSURANCE

A. Surfacing shall conform to the guidelines of the ASBA for planarity.

B. All surface coatings products shall be supplied by a single manufacturer.

C. The contractor shall record the batch number of each product used on the site and maintain it through the warranty period.

D. The contractor shall provide the inspector, upon request, an estimate of the volume of each product to be used on the site.

E. The installer shall be an authorized applicator of the specified system.

F. The manufacturer's representative shall be available to help resolve material questions.

1.4 SUBMITTALS

A. Manufacturer specifications for components, color chart and installation instructions.

B. Authorized Applicator certificate from the surface system manufacturer.

E. ITF classification certificate for the system to be installed.

F. Reference list from the installer of at least 5 projects of similar scope done in each of the past 3 years.

G. Current Material Safety Data Sheets (MSDS).

H. Product substitution: If other than the product specified, the contractor shall submit at least 7 days prior to the bid date a complete type written list of proposed substitutions with sufficient data, drawings, samples and literature to demonstrate to the owners satisfaction that the proposed substitution is of equal quality and utility to that originally specified. Information must include a QUV test of at least 1000 hours illustrating the UV stability of the system. The color system shall have an ITF pace rating in Category 2. Under no circumstances will systems from multiple manufacturers be considered.

1.5 MATERIAL HANDLING AND STORAGE

A. Store materials in accordance with manufacturer specifications and MSDS.

B. Deliver product to the site in original unopened containers with proper labels attached.

C. All surfacing materials shall be non flammable.

1.6 GUARANTEE

A. Provide a guarantee against defects in the materials and workmanship for a period of one year from the date of substantial completion.

1.7 INSTALLER QUALIFICATIONS

A. Installer shall be regularly engaged in construction and surfacing of cushioned acrylic tennis courts, play courts or similar surfaces.

B. Installer shall be an Authorized Applicator of the specified surface system.

C. Installer shall be a builder member of the ASBA.

1.8 MANUFACTURER QUALIFICATIONS

A. System manufacturer shall provide documentation that the surface to be installed has been classified by the ITF as a medium pace surface.

B. System manufacturer shall be a US owned company.

C. System manufacturer shall be a member of the ASBA.

PART 2 PRODUCTS

2.1 MANUFACTURERS

A. California Products Corp., Andover, MA. 01810 / Plexicushion Prestige System
www.plexipave.com

B. Substitutions: Submit requests at least 7 days prior to the bid date with a complete type written list of proposed substitutions with sufficient data, drawings, samples and literature to demonstrate to the owners satisfaction that the proposed substitution is of equal quality and utility to the specified product. Information must include a QUV test of at least 1000 hours illustrating the UV stability of the system. The system shall have an ITF pace rating in Category 2. Under no circumstance may the final color surface contain silica sand added at the job site.

2.2 MATERIALS

A. Patching Mix (California Court Patch Binder) - for use in patching cracks, holes, depressions and other surface imperfections.

B. Crack Filler (Plexipave Crack Filler) - for use in filling fine cracks.

C. Acrylic Filler Course (California Acrylic Resurfacer) – for use as a filler for new or existing asphalt surfaces. The 100% acrylic filler shall be blended with approved silica sand at the job site.

D. Plexicushion Base Coat – A course rubber filled material used to build depth and resilience.

E. Plexicushion – A firm rubber and selected filler material to build density and resilience.

F. Plexipave Grand Prix – 100% flexible acrylic coating filled with select silica.

G. Acrylic Color Playing Surface (Plexichrome/Plexipave Color Base) – for use as the finish color and texture. Plexichrome and Plexipave Color Base are blended at the job site to achieve the correct surface texture. *Factory Fortified Plexipave may be used as an alternative material.

H. Line Paint (California Line Paint) – for use as the line marking on the court/play surface.

I. Water – for use in dilution/mixing shall be clean and potable.

2.3 MATERIAL SPECIFICATIONS

A. Court Patch Binder – 100% acrylic resin blended with Portland Cement and silica sand.

1) Percent solids by weight (minimum)	46%
2) Weight	8.7-8.9 lbs./gallon

B. Plexipave Crack Filler – 100% acrylic resin heavily filled with sand.

1) Percent solids by weight (minimum) 85%
2) Percent solids by weight (minimum) 15 lbs./gallon

C. California Acrylic Resurfacer – 100% acrylic resin (no vinyl copolymerization constituent). The product shall contain not less than 3.5% attapulgite.

1) Percent solids by weight (minimum) 26.7%
2) Weight 8.7-8.9 lbs./gallon

D. Plexicushion Base Coat – Proprietary latex resin filled with .5-1.0 mm EPDM granule.

1) Percent solids by weight (minimum) 43.4%
2) Weight 8.78 lbs./gallon

E. Plexicushion – Proprietary latex resin filled with a unique combination of rubber and select mineral filler.

1) Percent solids by weight (minimum) 43.8%
2) Weight 9.15 lbs./gallon

F. Plexipave Gran Prix

G. Plexichrome – 100% acrylic resin (no vinyl copolymerization constituent) with selected light fast pigments. Green shall contain not less than 8% chrome oxide.

1) Percent solids by weight (minimum) 36.5%
2) Weight 10.0-10.2 lbs./gallon

H. Plexipave Color Base – 100% acrylic resin containing no vinyl copolymerization constituent. Contains not more than 63% rounded silica sand.

1) Percent solids by weight (minimum) 74%
2) Weight 13.1-14.1 lbs./gallon

I. California Line Paint – 100% acrylic resin containing no alkyds or vinyl constituents. Texturing shall be rounded silica sand.

1) Percent solids by weight (minimum) 60.5%
2) Weight 12-12.3 lbs./gallon

All surfacing materials shall be non-flammable and have a VOC content of not less than 100g./ltr. Measured by EPA method 24.

Local sands are not acceptable in the color playing surface. Sands must be incorporated at the manufacturing location to insure quality and stability.

PART 3 EXECUTION

3.1 WEATHER LIMITATIONS

A. Do not install when rainfall in imminent or extremely high humidity prevents drying.

B. Do not apply unless surface and air temperature are 50°F and rising.

C. Do not apply if surface temperature is in excess of 140°F.

3.2 PREPARATION FOR CUSHIONED UNDERLAYMENT

A. Clean surfaces of loose dirt, oil, grease, leaves, and other debris in strict accordance with manufacturer's directions. Pressure washing will be necessary to adequately clean areas to be coated. Any areas previously showing algae growth shall be treated with bleach or approved product to kill the organisms and then be properly rinsed.

B. Holes and cracks: Cracks and holes shall be cleaned and a suitable soil sterilant, as approved by the owner, shall be applied to kill all vegetation 14 days prior to use of **Court Patch Binder** according to manufacturer's specifications.

C. Depression: Depressions holding enough water to cover a five cent piece shall be filled with Court Patch Binder Patching Mix. 3 gallons of Court Patch Binder, 100 lbs. 60-80 silica sand, 1 gallon Dry Portland Cement (Type I). **This step shall be accomplished prior to the squeegee application of Acrylic Resurfacer.** The contractor shall flood all the courts and then allow draining. Define and mark all areas holding enough water to cover a nickel. After defined areas are dry, prime with tack coat mixture of 2 parts water/l part Court Patch Binder. Allow tack coat to dry completely. Spread Court Patch Binder mix true to grade using a straight edge (never a squeegee) for strike off. Steel trowel or wood float the patch so that the texture matches the surrounding area. Never add water to mix. Light misting on surface and edges to feather in is allowed as needed to maintain work ability. Allow to dry thoroughly and cure.

NO WORK FROM THIS STAGE ON SHALL COMMENCE UNTIL AN INSPECTOR HAS ACCEPTED THE SURFACE.

D. Filler Course. (Acrylic Resurfacer): Filler course shall be applied to the clean underlying surface in one application to obtain a total quantity of not less than .06 gallon per square yard based on the material prior to any dilution. Acrylic Resurfacer may be used to pre-coat depression and crack/hole repairs to achieve better planarity prior to filler course application.

1. Over a properly repaired surface of asphalt on existing courts, apply one coat of Acrylic Resurfacer according to the following mix:

Acrylic Resurfacer	55 gallons
Water	20 - 40 gallons
Sand	600-800 pounds / 60-80 mesh
Liquid Yield	112-138 gallons

On new asphalt, two coats of Acrylic Resurfacer shall be used to properly fill all voids in the asphalt surface. Use clean, dry 50-60 mesh sand and clean, potable water to make mixes. The quantity of sand and water in the above mix may be adjusted within above limits to complement the roughness and temperature of the surface.

2. Mix the ingredients thoroughly using accepted mixing devices and use a 70 Durometer rubber bladed squeegee to apply each coat of Acrylic Resurfacer as required.

3. Allow the application of Acrylic Resurfacer to dry thoroughly. Scrape off all ridges and rough spots prior to any subsequent application of Acrylic Resurfacer or subsequent cushion surface system.

3.3 APPLICATION OF CUSHION UNDERLAYMENT

A. Application of the cushion underlayment can begin after all surface preparation has been completed and it is thoroughly dry.

B. Plexicushion Base Coat shall be blended in a mechanical mixer to a uniform consistency. Dilution shall be 4 parts material to 1 part water.

C. Plexicushion Base Coat shall be applied in not less than three applications to obtain an average application rate of .22 gal./sy. per application. Application may be made by 50 durometer squeegee on an approved air diaphragm pump with surge suppression.

D. Care should be taken to not allow ridges or puddles to form during application. Any defects that do occur shall be corrected prior to the application of Plexicushion.

E. After the Plexicushion Base Coat has thoroughly dried, begin the application of Plexicushion.

F. Plexicushion shall be blended in a mechanical mixer to a uniform consistency. Dilution shall be 4 parts material to 1 part water.

G. Plexicushion shall be applied by a 50 durometer squeegee. Be careful not to leave ridges.

H. Plexicushion shall be applied in not less than three applications at an average application rate of .11 gal per square yard.

I. Allow the final coat of Plexicushion to dry for at least 6 hours in good weather conditions.

J. Apply the first coat of Fortified Plexipave in accordance with Sec. 3.4. After the application has thoroughly dried, the surface should be lightly sanded with a mechanical sander.

.

3.4 APPLICATION OF ACRYLIC COLOR PLAYING SURFACE

A. All areas to be color coated shall be clean, free from sand, clay, grease, dust, salt or other foreign matters. The Contractor shall obtain the Engineer's approval, prior to applying any surface treatment.

B. Blend color base and Plexichrome with a mechanical mixer to achieve a uniform Fortified

Plexipave mixture. The mix shall be:

Color Base	30 gallons
Plexichrome	20 gallons
Water	20 gallons

C. Application shall be made by 50 durometer rubber faced squeegees. The Fortified Plexipave mixture should be poured on to the court surface and spread to a uniform thickness in a regular pattern.

D. A total of 3 applications of Fortified Plexipave shall be made to achieve a total application rate of not less than .15 gal./sy. No application should be made until the previous application is thoroughly dry.

E. If a more flexible surface is desired, Plexipave Gran Prix coating may be used. It is applied at a total application rate of .18 gal./sy.

3.4 LINE PAINTING

A. Line shall be 2" wide unless otherwise noted on the drawings. Lines hall be carefully laid out in accordance with ASBA and USTA guidelines. The area to be marked shall be taped to insure a crisp line. The California Line Paint shall have a texture similar to the surrounding play surface. Application shall be made by brush or roller at the rate of 150-200 sg./gal. (3/4 gal. per tennis court).

3.5 PROTECTION

A. Erect temporary barriers to protect coatings during drying and curing.

B. Lock gates to prevent use until acceptance by the owner's representative.

3.6 CLEAN UP

A. Remove all containers, surplus materials and debris. Dispose of materials in accordance with local, state and Federal regulations.

B. Leave site in a clean and orderly condition.

A Division of California Products • An Employee Owned Company
150 Dascomb Road, Andover Massachusetts 01810 USA
Phone: 978-623-9980 / 800-225-1141 • Fax: 978-623-9960
www.plexipave.com • info@plexipave.com

SECTION 10.0

SITE IMPROVEMENTS
INTERIOR/EXTERIOR ATHLETIC FACILITIES

PLEXIPAVE® SYSTEM

DESCRIPTION:
The Plexipave Color Surfacing System, developed through almost four decades of technological advancements in acrylic athletic surfacing, is a durable, asbestos free, colorful playing surface compatible with hot mix asphalt, asphalt emulsion surfaces and suitably prepared concrete. The Plexipave System is a combination of texture coats and finish coats that provide a long-wearing color surface of uniform texture. The system is suitable for all climatic conditions and protects asphalt from ultraviolet ray deterioration. Based on 100% acrylic water vehicle coatings, the Plexipave System dries rapidly and allows surfaces to breathe enabling moisture vapor to pass through the dried film.

Generally applied in three coats, two filler coats and one finish coat, the speed of play can be adjusted by the amount of sand present in the finished coat. Additionally, Plexicushion may be used to provide a cushioned subsurface for greater comfort and ease of play.

SURFACE USES:

Over asphalt surfaces and suitable concrete:

- Tennis Courts
- Basketball Courts
- Field Houses
- Play Areas
- Lighted traffic pathways & walks
- Asphalt or concrete rooftop areas
- Multi-purpose sports areas

APPLICATION:

Depending upon the product used in the system, application is by 70 or 50 durometer flexible rubber squeegee, as well as by wide hair-type push brooms for finish coat application of non sand-filled materials.

DRYING TIME:
• 30 minutes to one hour at 70°+ with 50% relative humidity.
• Indoor applications require fans and good ventilation.
• Surface may be used for play in 24 hours after completion.

COLOR RANGE:
Nine standard colors: Light Green, Dark Green, Florida Green, California Red, Sahara Sand, Pacific Blue, Cape Gray, Brown, Maroon. (Special colors are available on request.)

LIMITATIONS:
- The Plexipave system will not prevent pavement cracks from occurring or reoccurring.
- Do not apply if surface temperature is less than 50°F or more than 140°F
- Do not apply over tar emulsion sealers.
- Allow asphalt to cure for a minimum of 14 days.
- Allow concrete to cure for a minimum of 28 days.
- No curing agents allowed on concrete surfaces.
- DO NOT STORE IN HOT SUN
- Apply only when ambient temperature is 50° and rising.
- Do not apply when rain is imminent.
- After diluting with water, use mixed materials promptly.
- Keep containers tightly closed when not in use.
- KEEP FROM FREEZING

THE PLEXIPAVE SYSTEM

The Plexipave System comprises the most complete group of recreational surface coatings and companion products available:

SURFACE COATINGS

Product	Description	Specification No.
Plexichrome®	Full color Acrylic (9 colors) Finish Coat (Non-Textured).	10.1
Plexipave Gran Prix	Exceptionally flexible Acrylic Surface Color Coating for resilient surfaces.	10.32
Fortified Plexipave	Ready-to-use, textured Color Finish.	10.2
Job-Mix Fortified Plexipave	On site mix for Plexichrome & Color base.	10.12
Plexipave Color Base	Neutral Acrylic Texture (filler coat) for job mixing with Pleichrome to make full color-in-depth surfacing,	10.5
Plexicushion®	Rubberized cushion subsurface, multi-coat system used under Plexipave.	10.3
Plexicushion Base Coat	Large rubber Particle Underlayment for Plexicushion.	10.9
Plexicolor® Line Paint	Flat, high-hide, 100% Acrylic Line Marking Paint – 7 colors – Textured or Non-textured.	10.4

SURFACE PREPARATION PRODUCTS

Acrylic Resurfacer	Acrylic Binder for job mixing with silica sand and water for filler coat mixes.	10.8
Crack Filler	Highly flexible, high solids filler for minor cracks.	10.10
Court Patch Binder	Concentrated Acrylic binder for mixing with silica sand and cement for patching and major cracks.	10.14
Plexibond® Coating	Surface primer as well as an adhesive in the Plexibond Fiberglass repair system.	10.11
Concrete Preparer	Acid pretreatment for uncoated Portland Cement Concrete.	10.13
Ti-Coat®	Two-component water-based epoxy primer for new or old uncoated concrete.	10.17
Plxipatch®	High Solids, ready-to-use acrylic compound for light patching.	10.21
Plxicushion Patch Compound	Rubberized patching compound for Plexicushion Surfaces.	10.22

SPECIALTY COATING

Clear-Glo #3®	Hard Acrylic surface coat for increased wear.	10.6
Grid-Stripe®	Latex field marking paint – semi permanent for athletic fields.	___

PLEXIPAVE SYSTEM
APPLICATION GUIDELINES

The following recommendations apply to field procedures for coating asphalt or concrete recreational surfaces (Note: See Application Specification 10.18 for Asphalt Surfaces and 10.19 for Concrete Surfaces):

STANDARD ASPHALT INSTALLATION

New Construction

- Level with Court Patch binder mix or Plexipatch
- 1 coat Acrylic Resurfacer
- 2 coats Fortified Plexipave
- 1 coat finish (depending on speed of play- either Fortified Plexipave or Plexichrome) (See Asphalt Spec. #10.18)

Re-Coat

Depending on the condition of surface,

- 1 coat Acrylic Resurfacer, (needed for courts that require extensive preparation)
- 2 or 3 coats of Fortified Plexipave.

STANDARD CONCRETE INSTALLATION

New Consruction

- Acid Etch with Concrete Preparer.
- Level with Court Patch Binder.
- Ti-Coat as Primer.
- 1 Coat Acrylic Resurfacer.
- Apply 3 coats Fortified Plexipave. (See Concrete Spec #10.19)

Re-Coat

- Remove any lose or flaking material.
- Repair any spalled areas or depressions with Court Patch Binder.
- 1 coat Acrylic Resurfacer (needed for courts that require extensive preparation).
- Recoat with 2-3 coats of Fortified Plexipave, depending on surface wear and texture.

PLEXICUSHION APPLICATION GUIDELINES

See: Application Specifications 10.3 and 10.9

Plexicushion Club

- 1 coat Acrylic Resurfacer
- 4 coats Plexicushion
- 3 coats Fortified Plexipave/Plexipave Gran Prix

Plexicushion Tournament

- 1 coat Acrylic Resurfacer
- 2 coat Plexicushion Basecoat
- 3 coats Plexicushion
- 3 Fortified Plexipave/Plexipave Gran Prix

Plexicushion Prestige

- 1 coat Acrylic Resurfacer
- 3 coat Plexicushion Base Coat
- 3 coats Plexicushion
- 3 coats Fortified Plexipave/Plexipave Gran Prix

Note: Open textured surfaces require a preliminary application of Acrylic Resurfacer

APPLICATION RATES PER COAT (UNDILUTED)

	GALLON/SQUARE YARD	GALLON/SQUARE METER	YARDS/GALLON	DILUTION RATE
ACRYLIC RESURFACER	.05-.07	.06-.09	15-20	2 to 1 10-16# Sand/Gal
COLOR BASE	.05-.07 Base (.03-.04) Chrome (.02-.03)	.06-.09 Base (.03-.04) Chrome (.02-.03)	30 to 20 to 20 Mix 15-20	Combined 3 to 2 to 2
PLEXICHROME	.05-.04	.05-.06	20.25	1 to 1
PLEXIPAVE	.05-.07	.06-.09	15-20	2 to 1
FORTIFIED PAVE (FACTORY)	.05-.07	.06-.09	15-20	4 to 1
JOB MIX FORTIFIED (see Color Base)				
PLEXICUSHION	.1-.13	.12-.16	8-10	4 to 1
PLEXICUSHION BASE COAT	.25	.3	4	4 to 1
CLEAR-GLO®	.025	.03	40	1 to 1
PLEXITRAC® SURFACER	.22-.50	.26-.60	2-4	4 to 1
TI COAT (A& B)	.025-.03	.029-.036	33-44	None
CONCRETE PREPARER	.01-.013	.012-.016	78-100	1 to 4
PLEXIBOND® COATING PLEXIBOND SYSTEM: PRIMER:	.07-.05 .04-.025	.084-.06 .048-.03	15-20 25-40	2 to 1 1 to 2

A Division of California Products • An Employee Owned Company
150 Dascomb Road, Andover Massachusetts 01810 USA
Phone: 978-623-9980 / 800-225-1141 • Fax: 978-623-9960
www.plexipave.com • info@plexipave.com

SECTION 10.19

SITE IMPROVEMENTS

EXTERIOR/INTERIOR ATHLETIC FACILITIES

APPLICATION SPECIFICATIONS
CONCRETE SURFACES

1.0 DESCRIPTION

This specification covers the application of a new wearing surface for Plexipave Tennis Courts and/or new or existing concrete tennis courts that have a sound, well-drained base of adequate thickness and stability. Surfaces should be properly sloped for good drainage, and free from cracks. The process consists of the repair of any minor depressions and cracks, followed by applications of the Plexipave System.

NOTE: The success of all-weather characteristics of coating is dependent on a sound base with good drainage, the concrete surface being prepared in accordance to Specification 10.0 of California Products Corporation and the U.S. Tennis Court & Track Builders Association. Care should be taken to provide adequate surface water drainage and an appropriate vapor barrier below the concrete slab. Surface variation should not exceed 1/8 inch in 10 ft. when measured in any direction with a straight edge and slope 1 inch in 10 ft., all in one plane.

2.0 MATERIALS

2.1 Concrete Preparer – shall comply with Specification 10.13 of California Products Corporation.

2.2 California Ti-Coat – shall conform with Specification 10.17 of California Products Corporation.

2.3 Plexipave Court Patch Binder – shall comply with Specification 10.14 of California Products Corporation

2.4 Acrylic Resurfacer – shall comply with Specification 10.8 of California Products Corporation.

2.5 Plexipave Color Base – shall conform to Specification 10.5 of California Products Corporation.

2.6 Plexichrome – shall conform to Specification 10.1 of California Products Corporation.

2.7 Plexicolor Textured Line Paint – shall conform to Specification 10.4 of California Products Corporation.

2.8 Water – The water used in all mixtures shall be fresh potable.

3.0 CONSTRUCTION – Concrete (new constructions)

3.1 **Surface Preparation** – Concrete shall have a wood float or medium broom finish. DO NOT PROVIDE STEEL – TROWEL FINISH. DO NOT ALLOW ANY CURING AGENTS OR HARDENERS TO BE USED. Concrete must cure for a minimum of 28 days. Thoroughly remove all dirt, dust, mud, oil, and all foreign matter. Flood the surface, locate and mark all depressions greater than the thickness of a nickel.

3.2 **Concrete Preparer** – Concrete surface must be etched with Concrete Preparer solution. After drying, all latent material must be removed from the surface.

3.3 **Depressions** – After the surface has dried, fill marked depressions with Court Patch Binder according to specifications using the following mix:

100lbs. 60-80 mesh silica sand (dry)
3 gallons Plexipave Court Patch Binder
1 or 2 gallons Portland Cement, Type 1 (20lbs. min.)

Tack Coat – A tack coat is necessary under patches only and shall be mixed as follows:

Plexipave Court Patch Binder diluted 1 part Court Patch Binder to 2 parts water and allowed to thoroughly dry prior to patching. After patching the surface shall not vary more than 1/8" in ten feet measured in any direction.

3.4 **Primer Coat** – Mix and apply California Ti-Coat epoxy primer according to Specification 10.17. Use only on uncoated surfaces.

NOTE: Plexibond may be used as an alternate for priming concrete courts. Consult manufacturer before mixing.

3.5 **Acrylic Filler Coat** – A coat of Acrylic Resurfacer shall be applied within 1 to 3 hours of the application of Ti – Coat while still tacky to fingertip touch.

Acrylic Resurfacer – 55 gallons
Sand (60-80 mesh) – 600-900 lbs.
Water – 20-40 gallons
Liquid Yield = 112-138 gallons

4.0 PLEXIPAVE COLOR BASE AND PLEXICHROME

4.1 Plexipave Acrylic textured coats shall be applied on the clean, dry underlying surface in 3 applications to obtain a total quantity of not less than .15 nor more than .23 gallons per sq. yd. of area, based on the material prior to dilution. No application shall be covered by a succeeding application until thoroughly dried.

Dilution with Plexichrome and water to obtain proper application consistency will be as follows:

Plexipave Color Base – 30 gallons
Plexichrome – 20 gallons
Water – 20 gallons

(NOTE: Other mix ratios may be used after consulting the manufacturer.)

The diluted material shall be homogeneous. Segregation before or during application will not be permitted. The finished surface shall have a uniform appearance and shall be free from ridges and tool marks.

5.0 PLAYING LINES

5.1 Four hours minimum after completion of the color coating, 2-inch wide, textured playing lines shall be accurately located, marked and painted with textured Plexicolor Line Paint as specified by the U.S. Tennis Association.

6.0 Limitations

6.1 No parts of the construction involving Plexipave System shall be conducted during rainfall or when rain is imminent. The air temperature must be at least 50 1/2F and rising. Do not apply when surface temperature is in excess of 140 1/2F. The Plexipave System will not prevent surface or structural crack from reoccurring.

A Division of California Products • An Employee Owned Company
150 Dascomb Road, Andover Massachusetts 01810 USA
Phone: 978-623-9980 / 800-225-1141 • Fax: 978-623-9960
www.plexipave.com • info@plexipave.com

EXTERIOR/INTERIOR **ACRYLIC LATEX** **COLOR SURFACE SYSTEM**

APPLICATION SPECIFICATIONS
ASPHALT SURFACES

1.0 DESCRIPTION

This specification covers the application of a new wearing surface texture for Plexipave Tennis Courts and new or existing asphalt concrete tennis courts that have a sound, well-drained base of adequate thickness and stability. Existing surfaces should be properly sloped for good drainage, and free from cracks. The process consists of the repair of any minor depressions, followed by application of the Plexipave System.

NOTE: The success of the all-weather characteristics of resurfacing is dependent on a sound base (with good drainage) and asphalt concrete meeting the requirements of The National Asphalt Paving Association and the U.S. Tennis Court and Track Builders Association. Surface variation should not exceed 1/8 inch in ten feet. when measured in any direction with a straightedge and a slope of 1 inch in 10 feet, all in one plane.

2.0 MATERIALS

2.1 Plexipave Court Patch Binder – shall comply with Specification 10.14 of California Products Corporation.

2.2 Plexipatch – shall comply with Specification 10.21 of California Products Corporation.

2.3 Acrylic Resurfacer - shall comply with Specification 10.8 of California Products Corporation.

2.4 Plexipave Color Base - shall conform to Specification 10.5 of California Products Corporation.

2.5 Plexichrome - shall conform to Specification 10.1 of California Products Corporation.

2.6 Plexicolor Line Paint - shall conform to Specification 10.4 of California Products Corporation.

2.7 Water – the water used in all mixtures shall be fresh and potable.

3.0 CONSTRUCTION

3.1 **Surface Preparation -** The surface to be coated must be sound, smooth, and free from dust, dirt or oily materials. Prior to the application of surfacing materials, the entire surface should be flooded, and checked for minor depressions or irregularities. Any puddled area covering a nickel shall be marked and repaired with Court Patch Binder using the following mix:

100 lbs. 60 – 80 mesh silica sand (dry)
3 gallons Plexipave Court Patch Binder
1 to 2 gallons Portland Cement (dry) (depending on humidity and temperature)

Tack coat consisting of 1 part Court Patch Binder and 2 parts water shall be applied to the patch areas and allowed to dry thoroughly prior to patching. For more information see CPC Specification 10.14 or 10.21.

After patching, the surface shall not vary more than 1/8 inch in ten feet measured in any direction.

4.0 SURFACE PREPARATION

In order to provide a smooth, dense underlayment for the Plexipave system, one application of California Acrylic Resurfacer shall be applied to the surface to obtain a coverage of 15 – 20 sq. yds. Per gallon (.07 - .05 gallons per square yard). No application shall be covered by a succeeding application until thoroughly cured. Dilution with water and sand is required utilizing the following mix:

Acrylic Resurfacer	55 gallons
Water (Clean and Potable)	20-40 gallons
Sand (45-60 Mesh)	600 – 900 lbs.
Liquid Yield	112 – 138 gallons

5.0 FORTIFIED PLEXIPAVE

5.1 Fortified Plexipave shall be applied by rubber bladed squeegee on the clean, dry surface in 3 applications to obtain a total quantity of not less than .15 nor more than .23 gallons per sq. yd. of area, based on the material prior to any dilution. No application shall be covered by a succeeding application until thoroughly cured.

Fortified Plexipave can be job mixed as follows:

Plexipave Color Base	30 gallons
Plexichrome	20 gallons
Water	20 gallons

The diluted material shall be homogenous. Segregation before or during application will not be permitted.

The finished surface shall have a uniform appearance and be free from ridges and tool marks.

5.2 PLAYING LINES – Four hours minimum after completion of the color resurfacing, 2-inch wide playing lines shall be accurately located, marked, and painted with Plexicolor Line Paint as specified by U.S. Tennis Association**.**

6.0 LIMITATIONS

No part of the construction involving the Plexipave System shall be conducted during rainfall, or when rainfall is imminent. The air temperature must be atleast 50°F and rising. Do not apply when surface temperature is above 140°F. The Plexipave System will not prevent surface or structural cracks from reoccurring.

Plexipave Tennis Court Surface Products

Open Plexipave Color Card

"As the USC men's tennis coach for the past 23 years, I was always looking for a slow, long-lasting court surface. Plexipave was the answer! They also have brilliant colors that stay sharp."

Dick Leach *Retired Men's Tennis Coach University of Southern California*

"I think it's great for the body, I think it's good for anyone's body. It's a lot easier on the joints, which is always good, especially when you're 6-2.""

Maria Sharapova
Professional Tennis Player From the New York Times, article "Australian Open Evens the Playing Surfaces" published Jan 13, 2008

Plexipave systems are formulated to meet the requirements of players at any level. For **tennis court surfaces**, there are three systems to choose from, offering varying degrees of speed and playability, all rated by the governing body of the game, the International Tennis Federation (ITF).

Plexipave IW - ITF Category 1 - Pace: Slow

For those who desire a much slower surface, to compensate for lower humidity, high altitudes or simply to change the pace of the game, Plexipave has developed the I.W. mixture, first used at the Indian Wells, CA tournament facility.

Plexipave Standard - ITF Category 3 - Pace: Medium

Considered by many to be the best combination of consistency-of-play, pace and foothing. Plexipave Standard is the traditional and most widely used tennis court surface system. Standard Plexipave provides a consistent and reliable medium-pace playing surface.

Plexipave H.U. - ITF Category 4 - Pace: Medium-Fast

Harvard University has been the birthplace of many great innovations and playing traditions. Plexipave H.U. is no exception. It has also been adapted as the standard for the Australian Open Series.

The Plexipave Color Finish System is an all-weather, durable, quick drying color surface that provides superior resistance to deterioration from ultra-violet rays. Plexipave is a 100% acrylic latex, color intense tennis surface formulated for use over asphalt and concrete. The high performance finish coat is available in ten popular standard colors. Custom colors are available to meet individual needs. Plexipave has been the choice of tournament installations around the world.

Plexipave - *Plexipave*

[Back to top]

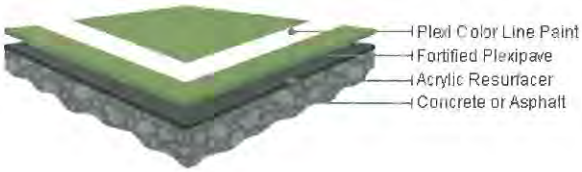

Examples

Plexipave

© 2014

California Products, Inc., All rights reserved | Site Map

Plexipave and Plexicushion Tennis Court Surfaces

Advanced acrylic tennis surface systems for indoor and outdoor tennis facilities

Plexipave and Plexicushion systems are advanced **tennis surfacing systems** designed to provide players with the highest levels of surface performance for competition and cushioning for safe training.

Open Plexipave Color Card

"As the USC men's tennis coach for the past 23 years, I was always looking for a slow, long-lasting court surface. Plexipave was the answer! They also have brilliant colors that stay sharp."

Dick Leach *Retired Men's Tennis Coach University of Southern California*

"I think it's great for the body. I think it's good for anyone's body. It's a lot easier on the joints, which is always good, especially when you're 6-2.""

Maria Sharapova
Professional Tennis Player From the New York Times, article "Australian Open Evens the Playing Surfaces" published Jan 13, 2008

The Plexipave Color Finish system is an all-weather, durable quick-drying color surfacer that provides superior resistance to deterioration from ultra-violet rays.Plexipave is a 100% acrylic latex color intense sports surface formulated for use over asphalt and concrete.

The Plexicushion System combines the consistent bounce, sure footing and outstanding durability of Plexipave with the innovative, shock-absorbing properties of EPDM rubber cushioning.The result is a tennis surface that dynamically responds to body impact and reduces fatigue on legs, knees, ankles and feet.

The Plexicushion substrate, a special blend of latex, rubber and plastic particles forms a resilient layer that absorbs body shock and reduces muscle fatigue. The 100% acrylic Plexipave surface provides uniform bounce, long lasting color and allows speed of play specification.

System Components Plexipave and Plexicushion are engineered tennis surface systems made up of innovative materials installed according to rigid application specifications. Each layer in the system serves a specific purpose, and contributes to the quality of the finished court.

- Textured line paint insures uniform ball bounce.
- Highly pigmented finishes allow speed of play specification. (Available in a popular palette of colors)
- Multiple Plexipave acrylic layers for the firm, uniform and durable surface Plexipave and Plexicushion are noted for.
- Plexicushion is an enhancement that provides dynamic response to body impact, attenuates foot and leg shock, and reduces fatigue.
- A filler undercoat.
- The Systems can be installed indoors or outdoors, on asphalt or concrete.
- Additional Plexipave products are used for patching, leveling and etching base surfaces.

Durability and Value Worldwide

Owners and facility managers around the world appreciate Plexipave's long-lasting, all-weather durability.It's 100% acrylic, asbestos-free composition retains color, texture and playability for 5 to 7 years between resurfacings. Excellent wear resistance represents significant value:a Plexipave or Plexicushion court is a wise investment that yields substantial returns year after year.

Outstanding Service and Support

Plexipave and Plexicushion are the most widely used acrylic tennis court surfacing systems in the world. They have achieved a global presence in tennis surface systems, and enjoy an international reputation for excellence and dependability. With the Plexipave and Plexicushion Systems, you get superior products supported by a worldwide organization of authorized applicators.

Superior Playability

Tennis players everywhere attest to the superior playability of the Plexipave System. Plexipave's speed of play makes it possible for all types of players to excel, and its distinctive qualities of consistently true bounce and sure footing enhance coaching, training and competition. According to coaches, when tournament competitors play on Plexipave and Plexicushion, they are unhindered by surface inconsistencies, allowing a level of play which truly reflects the athlete's skill.

SECTION 09 65 66
ARCHITECTURAL SPECIFICATIONS FOR INDOOR RESILIENT ATHLETIC SURFACING

PART 1 – GENERAL

1.1 *SECTION INCLUDES*

A. Supply and installation of the indoor resilient multipurpose surfacing
B. Application of the game lines
C. References for the correct construction and preparation of concrete slabs to receive resilient flooring.

1.2 *SUBMITTALS*

A. Product Data:
Manufacturer's promotional brochures, specifications and installation instructions

B. Manufacturer Certifications:
1. Provide certification that accurately identifies the Original Equipment Manufacturer (OEM) of flooring furnished for this project including manufacturer's name, address and factory location.
2. Suppliers of private label flooring for this project must identify themselves as such and fully disclose the OEM information listed above.
3. All "manufacturer" requirements in these specifications must be complied with by the OEM, including warranties, certifications, qualifications, product data, test results, environmental requirements, performance data, etc.

B. Samples:
1. Submit for selection and approval three (3) sets of the indoor resilient multipurpose surfacing, manufacturer's brochures, samples or sample boards of all of the available colors, textures and styles.
2. Submit color samples of all the available game line paint colors for selection and approval.

C. Closeout Submittals:
1. Submit three (3) copies of the indoor resilient multipurpose surfacing and manufacturer's maintenance instructions.
2. Submit three (3) copies of the material and installation warranties as specified.

1.3 *QUALITY ASSURANCE*

A. Qualifications:
1. The indoor resilient multipurpose surfacing shall have been actively marketed for a minimum of ten (10) years.
2. The indoor resilient multipurpose surfacing shall be manufactured in an ISO 9001 certified plant.
3. The indoor resilient multipurpose surfacing shall be manufactured in an ISO 14001 certified plant.
4. The indoor resilient multipurpose surfacing supplier shall be an established firm, experienced in the field, and appointed as a distributor by the manufacturer of the indoor resilient multipurpose surfacing.

5. The installer of the indoor resilient multipurpose surfacing shall have a minimum of five (5) years of experience in the field installing indoor resilient multipurpose surfacing and have worked on at least five (5) projects of similar size, type and complexity.

B. Certifications:
1. Installer to submit the indoor resilient athletic surfacing manufacturer's certification attesting that they are an approved installer of the indoor resilient multipurpose surfacing.
2. The indoor resilient multipurpose surfacing manufacturer to submit official ISO 9001 certification for the facility in which the indoor resilient multipurpose surfacing is manufactured.
3. The indoor resilient multipurpose surfacing manufacturer to submit official ISO 14001 certification for the facility in which the indoor resilient multipurpose surfacing is manufactured.

C. Testing:
Tests shall be relative for multi-purpose use with certificates from independent testing resources to be made available upon request. Test results shall be no more than 5 years old and performed according to ASTM standard testing procedures.

1.4 *DELIVERY, STORAGE AND HANDLING*

A. Delivery:
Material shall not be delivered until all related work is in place and finished and/or proper storage facilities and conditions can be provided and guaranteed stable according to FieldTurf USA, Inc. recommendations.

B. Storage:
Store the material in a secure, clean and dry location. Maintain temperature between 55° and 85° Fahrenheit. Store the indoor resilient athletic surfacing rolls in an upright position on a smooth flat surface immediately upon delivery to jobsite. Rolls shipped in rigid protective cardboard containers can be laid horizontally prior to unpacking and installation.

1.5 *PROJECT/SITE CONDITIONS*

A. It is the responsibility of the general contractor/construction manager to maintain project/site conditions acceptable for the installation of the indoor resilient multipurpose flooring.

B. The area in which the indoor resilient multipurpose surfacing will be installed shall be dry and weather tight. Permanent heat, light and ventilation shall be installed and operable.

C. All other trades shall have completed their work prior to the installation of the resilient athletic flooring. The general contractor or Construction Manager shall maintain a secure and clean working environment before, during and after the installation. Suspension of other trades' work may be authorized providing their work will not damage the new flooring.

D. Maintain a stable room temperature of at least 65°F for a minimum of one (1) week prior to, during and thereafter installation.

E. An effective low-permeance vapor barrier is placed directly beneath the concrete subfloor. For "on" or "below grade" installations, it is recommended to provide a permanent vapor barrier resistant to long term hydrostatic pressure/moisture exposure. Protrusions should be sealed to prevent moisture migration into the slab. Moisture should not be allowed to enter the slab after the completed construction.
F. Concrete subfloor surface pH level within the 7 to 10 range dependent upon installation type.
G. Concrete subfloor should be no greater than 1/8" within a 10 ft diameter. This tolerance can be measured in accordance with ASTM E1155. A specified (F_F) of 50 and an (F_L) of 30 should reach this degree of floor flatness and floor level. There is no numerical correlation between F numbers and the deviation from the straight edge, however the above specified numbers should achieve a flat floor with minimal deviation in the slab. Reference ACI 117 and ACI 302.1R. The general contractor should provide a certificate of compliance with the above recommendations.
H. Concrete subfloor must be clean and free of all foreign materials or objects including, but not limited to, curing compounds and sealers.
I. Fill cracks, grooves, voids, depressions, and other minor imperfections. Follow the manufacturer's directions. Moveable joints must be treated utilizing specific transitioning joint devices depending upon the architect's recommendations. Follow current ASTM F710 guidelines for the preparation of concrete slabs to receive resilient flooring.
J. Refer to ACI 302.2R "Guidelines for Concrete Slabs that Receive Moisture-Sensitive Flooring Materials" for concrete design and construction.
K. Concrete slab shall be fortified with continual steel reinforcement. Fiber reinforcement alone shall not be considered adequate fortification.

1.6 *WARRANTY*

A. Materials:
The indoor resilient athletic surfacing shall be covered by the manufacturer against product defect for 10 years and a 15 year wear through "wear layer" with the surface as defined in ASTM F1303, Section 6.1.3. The manufacturer of the indoor resilient multipurpose surfacing must provide this warranty upon request. Warranties shall not be prorated during the life of the warranty period.

1.7 *ADDITIONAL MATERIALS*

Furnish to the owner additional materials containing a total of at least 1% of each different color or design of the indoor resilient athletic surfacing used on the project.

1.8 *LEED™ CERTIFICATION*

The indoor resilient athletic surfacing should be able to help this facility to achieve points towards *LEED™ certification.* Flooring system must be certified by FloorScore.

LEED categories positively affected by the indoor resilient athletic surfacing:

Product Type			Vinyl
Building Reuse Maintain Interior Nonstructural Elements	MR 1.2	Renovation	1
Construction Waste Management	MR 2	Renovation	2
Construction Waste Management Materials Reuse	MR 3 5 % - 1 point 10% - 2 points	Renovation	2
Recycled Content	MR 4 20% - 2 points	New/Renovation	2
Indoor Environmental Air Quality Low VOC Adhesives/Sealants	IEQ 4.1	New/Renovation	1
Low-emitting Materials Paints and Coatings	IEQ 4.2	New/Renovation	1
Low-Emitting Materials Flooring Systems	IEQ 4.3	New/Renovation	1

PART 2 - PRODUCTS

2.1 *MANUFACTURERS*

The basis of the design for the indoor resilient multipurpose surfacing is Omnisports 6.5 mm and Tarkolay as manufactured by FieldTurf USA, Inc. All other installation accessories and related components must be either made or approved by the indoor resilient athletic surfacing manufacturer. Other products may be approved as equal if deemed qualified and submitted in accordance with the General Conditions. Test reports confirming compliance from an Independent Sports Laboratory must be provided along with samples, technical data, installation, maintenance, and warranty prior to acceptance as an alternative product.

2.2 *MATERIALS.*

Omnisports 6.5 mm - Prefabricated sport surface with wood flooring design and slightly textured embossed surface as supplied by FieldTurf USA, Inc. Embossing of wood design and solid colors must be the same; varying embossing or surface textures will not be allowed. Printing of wood design shall closely resemble standard wood strip flooring in size, color, board length, and grain appearance. The wood design shall be protected by a clear layer of pure PVC (Polyvinyl Chloride) and Top Clean, a factory applied UV cured urethane treatment. Intermediate layers shall be fortified with a non-woven fiberglass grid for increased dimensional stability. The foam force reduction layer shall be high-density closed cell PVC foam with honeycomb embossing, and is applied in one continuous manufacturing process. Laminated or adhered foam layers will not be allowed. Field constructed products will not be accepted. Physical properties of the indoor resilient athletic surfacing shall conform to the following minimums:

Width	…….	6’6” (2 m)
Length	…….	85’ (25.9m) approx.

Total Thickness	…….	6.5 mm
Vertical Deformation	PASSED	ASTM F2772
Rolling Load	PASSED	0.30 (EN 1569 {11/1999})
Surface Finish Effect	PASSED	ASTM F2772 (80 – 110)
Allergy and Asthma Friendly	ASP: 05-01/101	Certified Compliant
Abrasion Resistance	PASSED	0.10 (EN ISO 5470-1 {06/1999})
Sound Insulation	Excellent	+/= 19 dB (ISO 717/2)
In Room Sound Insulation	Excellent	61dB (NF S31-074)
Ball Rebound	PASSED	ASTM F2772 > 90%
Shock Absorption	PASSED	ASTM F2772 Class 2
Fire Rating	PASSED	ASTM E648 Class 1

Tarkolay – A high quality low permeance slip sheet vapor retarder designed to separate the installed system from the substrate below. Tarkolay as manufactured by Fieldturf can be used below, on, or above grade substrates that experience elevated moisture conditions. Moisture tolerances shall not exceed 98% RH per ASTM F2170.

1. Physical properties of the indoor resilient athletic surfacing shall conform to the following minimums:

Width	…….	6’6” (2 m)
Length	…….	147’7”’ (45 m) approx.
Total Thickness	…….	1.3 mm
Dimensional Stability	PASSED	.01% (EN 1434)
Permeance	Excellent	<0.20 (ASTM E96

1. Color: As available from the indoor resilient athletic surfacing manufacturer’s standard range.
2. Hardwood Design Series: A wood look design as available from the indoor resilient athletic surfacing manufacturer’s standard range.
3. Texture: Texture to remain consistent between solid colors and wood design when blending colors.

B. Welding Rod:
As supplied by the indoor resilient athletic surfacing manufacturer or supplier. Color to blend with the indoor resilient athletic surfacing color or design. All seams shall be welded to create a monolithic and impermeable surface.

C. Adhesive:
As approved by the indoor resilient athletic surfacing manufacturer.

D. Game Line Paint Primer:
As approved by the indoor resilient athletic surfacing manufacturer.

E. Game Line Paint:
As approved by the indoor resilient athletic surfacing manufacturer. Colors are to be selected from the manufacturer’s standard range.

PART 3 - EXECUTION

3.1 *EXAMINATION*

A. It is the responsibility of the general contractor/construction manager to ensure that project/site conditions are acceptable for the installation of the indoor resilient athletic flooring.
B. Verify that the area in which the indoor resilient athletic surfacing will be installed is dry and weather tight. Verify that permanent heat, light and ventilation is installed and operable.
C. Verify that all other work that could cause damage, dirt and dust or interrupt the normal pace of the indoor resilient athletic flooring installation is completed or suspended.
D. Verify that there is a stable room temperature of at least 65°F.
E. Verify that there are no foreign materials or objects on the subfloor and that the subfloor is clean and ready for installation.
F. *Installation with Tarkolay to Concrete Subfloor* : moisture content must be less than 98 % RH when tested per ASTM F2170.
G. Do not average the results of the tests. Report all field test results in writing to the General Contractor, Architect, and End User prior to installation.
H. Verify that the concrete subfloor surface pH level is within the 7 - 11 range.
I. Document the results indicating the slab is within manufacturer's tolerances for slab deviation.

3.2 *PREPARATION OF SURFACES*

A. Sand the entire surface of the concrete slab.
B. Sweep the concrete slab so as to remove all dirt and dust. If a sweeping compound is to be used it must be a sweeping compound that does not contain oil or other items that may inhibit the adhesive bond.
C. Slab must be dust free. In the event that dust impairs adhesive bond, priming the slab prior to application of adhesive may be necessary. Follow installation guidelines.

3.3 *INSTALLATION*

A. The installation area shall be closed to all traffic and activity for a period to be set by the indoor resilient athletic surfacing installer. The indoor resilient athletic surfacing installation shall not begin until the installer is familiar with the existing conditions.
B. All necessary precautions should be taken to minimize noise, smell, dust, the use of hazardous materials and any other items that may inconvenience others.
C. Install the indoor resilient athletic surfacing in strict accordance with the indoor resilient athletic surfacing manufacturer's written instructions.
D. Install the indoor resilient athletic surfacing minimizing cross seams. Provide a seam diagram during the submittal process for approval prior to installation.
E. Paint game lines using approved game line paint primer and game line paint in strict accordance with the game line paint manufacturer's instructions.

F. Install appropriate threshold plates or transition strips where necessary.

3.4 *CLEANING*

A. Remove all unused materials, tools, and equipment and dispose of any debris properly. Clean the indoor resilient athletic surfacing in accordance with the manufacturer's instructions.

3.5 *PROTECTION*

If required, protect the indoor resilient athletic surfacing from damage using coverings approved by the manufacturer until acceptance of work by the customer or their authorized representative.

3.6 RELATED STANDARDS AND GUIDELINES

A. ASTM F2170 "Standard Test Method for Determining Relative Humidity In Concrete Floor Slabs Using In-Situ Probes"
B. ASTM F710 "Standard Practice for Preparing Concrete Floors to Receive Resilient Flooring"
D. ACI 302.2R-06 "Guideline for Concrete Slabs that Receive Moisture-Sensitive Flooring Materials"

END OF SECTION

SECTION 09 65 66
ARCHITECTURAL SPECIFICATIONS FOR INDOOR RESILIENT ATHLETIC SURFACING

PART 1 – GENERAL

1.1 *SECTION INCLUDES*

A. Supply and installation of the indoor resilient multipurpose surfacing
B. Application of the game lines
C. References for the correct construction and preparation of concrete slabs to receive resilient flooring.

1.2 *SUBMITTALS*

A. Product Data:
Manufacturer's promotional brochures, specifications and installation instructions

B. Manufacturer Certifications:
1. Provide certification that accurately identifies the Original Equipment Manufacturer (OEM) of flooring furnished for this project including manufacturer's name, address and factory location.
2. Suppliers of private label flooring for this project must identify themselves as such and fully disclose the OEM information listed above.
3. All "manufacturer" requirements in these specifications must be complied with by the OEM, including warranties, certifications, qualifications, product data, test results, environmental requirements, performance data, etc.

B. Samples:
1. Submit for selection and approval three (3) sets of the indoor resilient multipurpose surfacing, manufacturer's brochures, samples or sample boards of all of the available colors, textures and styles.
2. Submit color samples of all the available game line paint colors for selection and approval.

C. Closeout Submittals:
1. Submit three (3) copies of the indoor resilient multipurpose surfacing and manufacturer's maintenance instructions.
2. Submit three (3) copies of the material and installation warranties as specified.

1.3 *QUALITY ASSURANCE*

A. Qualifications:
1. The indoor resilient multipurpose surfacing shall have been actively marketed for a minimum of ten (10) years.
2. The indoor resilient multipurpose surfacing shall be manufactured in an ISO 9001 certified plant.
3. The indoor resilient multipurpose surfacing shall be manufactured in an ISO 14001 certified plant.
4. The indoor resilient multipurpose surfacing supplier shall be an established firm, experienced in the field, and appointed as a distributor by the manufacturer of the indoor resilient multipurpose surfacing.

5. The installer of the indoor resilient multipurpose surfacing shall have a minimum of five (5) years of experience in the field installing indoor resilient multipurpose surfacing and have worked on at least five (5) projects of similar size, type and complexity.

B. Certifications:
1. Installer to submit the indoor resilient athletic surfacing manufacturer's certification attesting that they are an approved installer of the indoor resilient multipurpose surfacing.
2. The indoor resilient multipurpose surfacing manufacturer to submit official ISO 9001 certification for the facility in which the indoor resilient multipurpose surfacing is manufactured.
3. The indoor resilient multipurpose surfacing manufacturer to submit official ISO 14001 certification for the facility in which the indoor resilient multipurpose surfacing is manufactured.

C. Testing:
Tests shall be relative for multi-purpose use with certificates from independent testing resources to be made available upon request. Test results shall be no more than 5 years old and performed according to ASTM standard testing procedures.

1.4 *DELIVERY, STORAGE AND HANDLING*

A. Delivery:
Material shall not be delivered until all related work is in place and finished and/or proper storage facilities and conditions can be provided and guaranteed stable according to FieldTurf USA, Inc. recommendations.

B. Storage:
Store the material in a secure, clean and dry location. Maintain temperature between 55° and 85° Fahrenheit. Store the indoor resilient athletic surfacing rolls in an upright position on a smooth flat surface immediately upon delivery to jobsite. Rolls shipped in rigid protective cardboard containers can be laid horizontally prior to unpacking and installation.

1.5 *PROJECT/SITE CONDITIONS*

A. It is the responsibility of the general contractor/construction manager to maintain project/site conditions acceptable for the installation of the indoor resilient multipurpose flooring.

B. The area in which the indoor resilient multipurpose surfacing will be installed shall be dry and weather tight. Permanent heat, light and ventilation shall be installed and operable.

C. All other trades shall have completed their work prior to the installation of the resilient athletic flooring. The general contractor or Construction Manager shall maintain a secure and clean working environment before, during and after the installation. Suspension of other trades' work may be authorized providing their work will not damage the new flooring.

D. Maintain a stable room temperature of at least 65°F for a minimum of one (1) week prior to, during and thereafter installation.

E. An effective low-permeance vapor barrier is placed directly beneath the concrete subfloor. For "on" or "below grade" installations, it is recommended

to provide a permanent vapor barrier resistant to long term hydrostatic pressure/moisture exposure. Protrusions should be sealed to prevent moisture migration into the slab. Moisture should not be allowed to enter the slab after the completed construction.

F. Concrete subfloor surface pH level within the 7 to 10 range dependent upon installation type.

G. Concrete subfloor should be no greater than 1/8" within a 10 ft diameter. This tolerance can be measured in accordance with ASTM E1155. A specified (F_F) of 50 and an (F_L) of 30 should reach this degree of floor flatness and floor level. There is no numerical correlation between F numbers and the deviation from the straight edge, however the above specified numbers should achieve a flat floor with minimal deviation in the slab. Reference ACI 117 and ACI 302.1R. The general contractor should provide a certificate of compliance with the above recommendations.

H. Concrete subfloor must be clean and free of all foreign materials or objects including, but not limited to, curing compounds and sealers.

I. Fill cracks, grooves, voids, depressions, and other minor imperfections. Follow the manufacturer's directions. Moveable joints must be treated utilizing specific transitioning joint devices depending upon the architect's recommendations. Follow current ASTM F710 guidelines for the preparation of concrete slabs to receive resilient flooring.

J. Refer to ACI 302.2R "Guidelines for Concrete Slabs that Receive Moisture-Sensitive Flooring Materials" for concrete design and construction.

K. Concrete slab shall be fortified with continual steel reinforcement. Fiber reinforcement alone shall not be considered adequate fortification.

1.6 *WARRANTY*

A. Materials:
The indoor resilient athletic surfacing shall be covered by the manufacturer against product defect for 10 years and a 15 year wear through "wear layer" with the surface as defined in ASTM F1303, Section 6.1.3. The manufacturer of the indoor resilient multipurpose surfacing must provide this warranty upon request. Warranties shall not be prorated during the life of the warranty period.

1.7 *ADDITIONAL MATERIALS*

Furnish to the owner additional materials containing a total of at least 1% of each different color or design of the indoor resilient athletic surfacing used on the project.

1.8 *LEED™ CERTIFICATION*

The indoor resilient athletic surfacing should be able to help this facility to achieve points towards *LEED™ certification.* Flooring system must be certified by FloorScore.

LEED categories positively affected by the indoor resilient athletic surfacing:

Product Type			Vinyl
Building Reuse Maintain Interior Nonstructural Elements	MR 1.2	Renovation	1
Construction Waste Management	MR 2	Renovation	2
Construction Waste Management Materials Reuse	MR 3 5 % - 1 point 10% - 2 points	Renovation	2
Recycled Content	MR 4 20% - 2 points	New/Renovation	2
Indoor Environmental Air Quality Low VOC Adhesives/Sealants	IEQ 4.1	New/Renovation	1
Low-emitting Materials Paints and Coatings	IEQ 4.2	New/Renovation	1
Low-Emitting Materials Flooring Systems	IEQ 4.3	New/Renovation	1

PART 2 - PRODUCTS

2.1 *MANUFACTURERS*

The basis of the design for the indoor resilient multipurpose surfacing is Omnisports 6.5 mm as manufactured by Fieldturf. All other installation accessories and related components must be either made or approved by the indoor resilient athletic surfacing manufacturer. Other products may be approved as equal if deemed qualified and submitted in accordance with the General Conditions. Test reports confirming compliance from an Independent Sports Laboratory must be provided along with samples, technical data, installation, maintenance, and warranty prior to acceptance as an alternative product.

2.2 *MATERIALS.*

Omnisports 6.5 - Prefabricated sport surface 6.5mm (1/4") with wood flooring design and slightly textured embossed surface as supplied by Fieldturf. Embossing of wood design and solid colors must be the same; varying embossing or surface textures will not be allowed. Printing of wood design shall closely resemble standard wood strip flooring in size, color, board length, and grain appearance. The wood design shall be protected by a clear layer of pure PVC (Polyvinyl Chloride) and Top Clean, a factory applied UV cured urethane treatment. Intermediate layers shall be fortified with a non-woven fiberglass grid for increased dimensional stability. The foam force reduction layer shall be high-density closed cell PVC foam with honeycomb embossing, and is applied in one continuous manufacturing process. Laminated or adhered foam layers will not be allowed. Field constructed products will not be accepted.

Multi-Poxy moisture mitigation/adhesive combination. Provide non-solvent reactive topically applied moisture mitigation/adhesive according to manufacturer's recommendations.

1. Physical properties of the indoor resilient athletic surfacing shall conform to the following minimums:

Width	…….	6'6" (2 m)
Length	…….	85' (25.9m) approx.
Total Thickness	…….	6.5 mm
Vertical Deformation	PASSED	ASTM F2772
Rolling Load	PASSED	0.30 (EN 1569 {11/1999})
Surface Finish Effect	PASSED	ASTM F2772 (80 – 110)
Allergy and Asthma Friendly	ASP: 05-01/101	Certified Compliant
Abrasion Resistance	PASSED	0.10 (EN ISO 5470-1 {06/1999})
Sound Insulation	Excellent	+/= 19 dB (ISO 717/2)
In Room Sound Insulation	Excellent	61dB (NF S31-074)
Ball Rebound	PASSED	ASTM F2772 > 90%
Shock Absorption	PASSED	ASTM F2772 Class 2
Fire Rating	PASSED	ASTM E648 Class1

1. Color: As available from the indoor resilient athletic surfacing manufacturer's standard range.
2. Hardwood Design Series: A wood look design as available from the indoor resilient athletic surfacing manufacturer's standard range.
3. Texture: Texture to remain consistent between solid colors and wood design when blending colors.

A. Welding Rod:
As supplied by the indoor resilient athletic surfacing manufacturer or supplier. Color to blend with the indoor resilient athletic surfacing color or design. All seams shall be welded to create a monolithic and impermeable surface.

B. Game Line Paint and Primer:
As approved by the indoor resilient athletic surfacing manufacturer.

PART 3 - EXECUTION

3.1 *EXAMINATION*

A. It is the responsibility of the general contractor/construction manager to ensure that project/site conditions are acceptable for the installation of the indoor resilient athletic flooring.

B. Verify that the area in which the indoor resilient athletic surfacing will be installed is dry and weather tight. Verify that permanent heat, light and ventilation is installed and operable.

C. Verify that all other work that could cause damage, dirt and dust or interrupt the normal pace of the indoor resilient athletic flooring installation is completed or suspended.

D. Verify that there is a stable room temperature of at least 65°F.

E. Verify that there are no foreign materials or objects on the subfloor and that the subfloor is clean and ready for installation.

F. *Direct Full Spread Adhering to Concrete Subfloor Multi-Poxy* : moisture content less than 92 % RH when tested per ASTM F2170. Follow Fieldturf' Installation Recommendations.
G. Do not average the results of the tests. Report all field test results in writing to the General Contractor, Architect, and End User prior to installation.
H. Verify that the concrete subfloor surface pH level is within the 7 - 11 range.
I. Document the results indicating the slab is within manufacturer's tolerances for slab deviation.

3.2 *PREPARATION OF SURFACES*

A. Sand the entire surface of the concrete slab.
B. Sweep the concrete slab so as to remove all dirt and dust. If a sweeping compound is to be used it must be a sweeping compound that does not contain oil or other items that may inhibit the adhesive bond.
C. Slab must be dust free. In the event that dust impairs adhesive bond, priming the slab prior to application of adhesive may be necessary. Follow installation guidelines.

3.3 *OPTIONS FOR MOISTURE MITIGATION*

A. For projects with moisture conditions higher than the specified tolerances, **TARKOLAY** may be used for conditions that do not exceed 15 lbs per ASTM F1869 and/or 98% per ASTM F2170. Use only approved Multi-Poxy adhesive as directed by the manufacturer.

3.4 *INSTALLATION*

A. The installation area shall be closed to all traffic and activity for a period to be set by the indoor resilient athletic surfacing installer. The indoor resilient athletic surfacing installation shall not begin until the installer is familiar with the existing conditions.
B. All necessary precautions should be taken to minimize noise, smell, dust, the use of hazardous materials and any other items that may inconvenience others.
C. Install the indoor resilient athletic surfacing in strict accordance with the indoor resilient athletic surfacing manufacturer's written instructions.
D. Install the indoor resilient athletic surfacing minimizing cross seams. Provide a seam diagram during the submittal process for approval prior to installation.
E. Paint game lines using approved game line paint primer and game line paint in strict accordance with the game line paint manufacturer's instructions.
F. Install appropriate threshold plates or transition strips where necessary.

3.5 *CLEANING*

A. Remove all unused materials, tools, and equipment and dispose of any debris properly. Clean the indoor resilient athletic surfacing in accordance with the manufacturer's instructions.

3.6 *PROTECTION*

L-2000
Product Specifications

G.3 - Bidder: FieldTurf USA, Inc.

PART 1 – GENERAL

1.1 SUMMARY

A. Product Name: L-2000.

B. Product Description: Pour-in-place, all-weather synthetic track surface consisting of polymer resin binders and rubber granules.

C. Scope of Work: Furnish all required labor, materials and equipment to successfully install the specified all-weather synthetic track surface including striping and markings to a base properly prepared by others.

1.2 RELATED WORK

A. Earthwork
B. Drainage
C. Asphaltic Concrete Paving
D. Cast-in-Place Concrete
E. Synthetic Turf

1.3 REFERENCE STANDARDS

A. The work shall conform to the standards for track construction as prescribed or approved by the appropriate governing body; NFHS, NCAA, or IAAF.
   1. NFSHSA *Track and Field Rules.*
   2. ASBA *Running Tracks Construction and Maintenance Manual.*

1.4 SUBMITTALS

A. Product Data
B. Striping Diagram
C. Operation and Maintenance Manual
D. Warranty

1.5 QUALITY ASSURANCE

A. Synthetic surfacing contractor (SSC) shall be licensed and bonded and possess a valid contractor's license in the state where Work is performed.

B. SSC shall have a minimum of 5 years experience installing the specified all-weather track surface under the same corporate name as current operations.

1.6 PROJECT CONDITIONS

A. SSC, General Contractor (GC) and/or Owner, shall conduct a pre-construction meeting to review project conditions prior to dispatch of the SSC's installation team.

B. Synthetic surface base asphalt/concrete.
   1. The base asphalt and/or concrete shall meet the standards set by the Architect/Engineer and described in the product specifications.
   2. Allow minimum of 14 days cure on new asphalt, 28 days cure on new concrete prior to application of specified synthetic track surface.
   3. When surfacing on new asphalt, the asphalt contractor shall provide a flood test of the asphalt base.
   4. Repair work required on the base shall be approved by the Architect/Engineer.
   5. GC and/or Owner shall be responsible to protect the base from activities and traffic that may damage the base or leave dirt, oil or other foreign material on the base prior to application of the synthetic track surface.

C. Weather
   1. Apply the synthetic track surface only during favorable weather conditions.
   2. No application of the synthetic track surface shall be conducted during rainfall, when rain is imminent, when freezing temperatures are forecasted or exist, or when gusting winds are occurring.
   3. Work is to progress only when the SSC can guarantee successful cure of the materials.

D. During surface installation and striping, all irrigation systems shall be shut-off or controlled so that no water falls on the track or event areas.

E. During set-up, installation and striping, the GC and/or Owner shall be responsible to have the entire track and other pertinent areas closed and secured of all activities 24 hours per day until completion of the project.

1.7 WARRANTY

A. Manufacturer's and Installer's Warranty
   1. The warranty on the all-weather synthetic track surface shall endure for six (6) years from completion of installation.
   2. The warranty is to be provided directly by the SSC to the Owner.
   3. The warranty shall cover defects in materials and workmanship not deemed as ordinary wear on a running track.

.

B. Warranty Bond not required.

PART 2 – PRODUCTS

2.1 MANUFACTURERS

A. Beynon Sports Surfaces., 19495 SW Teton Ave., Tualatin, OR 97092,
   Tel: 503-691-2484, Fax: 503-692-0491, www.beynonsports.com

2.2 MATERIALS

A. Rubber
   1. L-2000 rubber shall be SBR granules with a 1.0-4.0mm gradation.
   2. SBR color shall be black

B. Binder
   1. L-2000 primer shall be a polymer resin compatible with base course materials.
   2. L-2000 binder shall be polymer resin containing a minimum of 50% solids.
   3. Polymer resin shall be pigmented black.

C. Marking and Line Paint
   1. The paint shall be formulated to be compatible with synthetic track surface materials.
   2. Colors shall be as prescribed or approved by the appropriate governing body; NFHS, NCAA, or IAAF.

PART 3 – EXECUTION

3.1 EXAMINATION

A. SSC shall examine project conditions to ensure successful installation of the synthetic track surface. Any deficiencies shall be reported to the GC and/or Owner for corrective action.

3.2 PREPARATION

B. SSC to protect adjacent areas from contamination of synthetic track surfacing materials due to installation procedures.

C. SSC shall prepare the base surface using a power blower to remove surface dirt. Cleaning necessary to remove embedded dirt, oil, or other foreign material shall be the responsibility of the GC and/or Owner.

3.3 INSTALLATION

A. General
   1. The L-2000 shall be installed using the “rake and spray” method. “Batching” of rubber and binder, “wet spraying” binder and rubber, or other methods used to reduce the number of layers applied are not allowed.
   2. L-2000 shall be installed in a minimum of eight layers.
   3. Materials shall be applied in even layers with equipment specifically designed for the installation of resilient surfacing. Thorough curing between each layer is required before successive coats are applied.
   4. L-2000 shall consist of a minimum quantity of 9.7 pounds per square yard of specified rubber granules and not less than 6.4 pounds per square yard of polymer resin.
   5. Final three layers shall have a minimum two percent by weight of pigment blended with the polymer resin.
   6. Completed L-2000 shall have a minimum depth of 10mm.

B. Striping
   1. Striping Contractor shall verify with Owner’s representative the exact locations, size, shape, and color of the lines and markings before proceeding with striping and markings.
   2. Engineer the layout of lane lines, starting lines, and markings as prescribed or approved by the Owner’s representative, Architect/Engineer and the appropriate governing body; NFHS, NCAA, or IAAF.
   3. All lines and markings shall be spray applied by experienced personnel utilizing equipment manufactured for line striping. Striping lines and markings shall have true sharp edges.

3.4 CLEANING

A. Upon completion of work remove all containers, surplus materials, and installation debris.

B. Leave area of work in clean orderly condition ready for use by Owner.

02/12/09
Product Specifications\09L2.doc

Hobart Coating
System Specifications

Part 1 – General

1.1 Scope

A. The synthetic surfacing contractor shall furnish all labor, materials, equipment, supervision and services necessary for the proper completion of the **Hobart Coating** synthetic track system and related work indicated on the drawings and specified herein.

B. The synthetic surfacing contractor shall refer to the drawings for the required locations of synthetic track surfacing to be installed. All quantities and dimensions shall be field verified by the synthetic surfacing contractor.

1.2 Specific Scope of Work

A. Install a full depth poured-in-place two-component, UV stabilized elastomeric polyurethane synthetic resurfacing system with Hobart textured finish.

B. Layout and paint all track lines and event markings as required and specified by current IAAF and NCAA rules.

1.3 Coordination

A. The synthetic surfacing contractor shall coordinate the work specified with an authorized and appointed representative of the owner so as to perform the work during a period and in a manner acceptable to the owner.

Part 2 - Quality Assurance

2.1 Contractor and Manufacturer Qualifications

A. The CONTRACTOR and the MANUFACTURER must be the same.

B. The CONTRACTOR must have a minimum of 10 years experience in the installation of poured-in-place, two-component elastomeric polyurethane synthetic track surfacing.

C. The CONTRACTOR shall be able to furnish evidence that they have been in business for a period of not less than 3 years, under the present name, and if required, furnish financial statements for each of the past 3 years.

D. The CONTRACTOR must have installed a minimum of 10 outdoor track facilities in the last 2 years using the exact, poured-in-place, two-component elastomeric polyurethane synthetic track resurfacing, as specified herein with the contractor bidding this project.

E. The MANUFACTURER must have a minimum of 10 years of experience with compound two-part polyurethane for athletic surfaces.

F. CONTRACTOR is to provide a list of completed facilities, minimum of 10 which are certified to meet IAAF/NCAA rules & regulations, utilizing the same product as specified.

G. The MANUFACTURER must offer a minimum of six (6) IAAF Certified Track Systems.

H. All polyurethane components must be MANUFACTURED in an ISO 9001 Certified facility.

I. All polyurethane components must be MANUFACTURED in the United States in an **ISO 9001:2008 Certified** facility to ensure the highest quality materials.

J. The CONTRACTOR must have installed a minimum of two (2) Class I IAAF Certified outdoor tracks within the United States.

2.2 Submittals

The following submittals must be received with bid submittal:

A. Standard printed specifications of the synthetic track surfacing system to be installed on this project.

B. An affidavit attesting that the synthetic track surfacing material to be installed meets the requirements defined by the manufacturers currently published specifications and any modifications outlined in those technical specifications.

C. A synthetic track surfacing system sample, 12” x 12”in size, of the same synthetic track surfacing system to be installed on this project.

D. A list of completed facilities, including the installing supervisor, of the exact Dual Durometer synthetic track surfacing system.

Part 3 – Materials

3.1 Binder Spray

A. Apply two applications of moisture cured binder to encapsulate embedded EPDM granulate.

B. Coverage shall be 7-8 gallons per thousand square feet.

3.2 Pigmented Polyurethane Coating

A. Apply two applications of pigmented polyurethane coating color matching EPDM and polyurethane.

B. Coverage shall be 7 gallons per 1,000 square feet.

3.3 Line Marking Paint

A. Manufacturers recommended pigmented paint.

Part 4 – Installation

4.1 Surface Preparation

A. Prior to the application of the resurfacing layer, the existing polyurethane surface shall be inspected for conformity to planarity requirements. The surface shall not deviate more than 1/8 inch in 10 feet from the specified grade when checked with a 10-foot straightedge. An impermeable polyurethane surface may also be flooded with water to determine if any “bird baths” or low areas exist.

B. The owner should verify that the surface tolerances meet all specifications issued by the appropriate sanctioning or governing body such as IAAF, NCAA, NFSHSA, TAC, etc.

C. The area to be surfaced shall be clean and free of any loose or foreign particles (dirt, oil, etc.) prior to the commencement of work. The surface is usually cleaned by use of a power blower and high-pressure washer.

4.2 Equipment

A. The **Hobart Coating** system components shall be processed and installed by specially designed machinery with automatic electronic portioning, which provides continuous mixing, feeding and finishing for accurate quality controlled installation.

B. No hand mixing is allowed.

4.4 Materials

A. Hobart Coating

The resilient Hobart textured finish shall be a dense matrix of embedded/encapsulated EPDM granules.

4.5 Site Conditions

A. Installation shall not take place if adjacent or concurrent construction generates excessive dust, abrasives or any other by-product that, in the opinion of the installer, would be harmful to the track material, until completion of such works.

B. Apply Synthetic Track Surfacing in dry weather when the existing surface and atmospheric temperatures are fifty (50) degrees Fahrenheit or above, and are anticipated to remain above fifty (50) degrees Fahrenheit for twenty-four (24) hours after completing application.

C. The maximum temperature cannot exceed 105 degrees at any point during a 24 - hour period.

D. Rain cannot be falling. If there is a threat of rain, work shall cease until dry conditions can be re-established on the track surface. Work is to proceed only when adequate curing can be guaranteed by the manufacturer.

Part 5 – Line Striping and Event Markings

5.1 Layout

A. Line striping and event markings shall be laid out in accordance with current IAAF and NCAA rules.

5.2 Certification

A. Upon completion of the installation, the owner shall be supplied with all necessary computations and drawings as well as a letter of certification attesting to the accuracy of the markings.

Part 6 – Guarantee

A. Synthetic track surfacing system shall be fully guaranteed against faulty workmanship and material failure for a period of five (5) years from the date of acceptance.

B. Synthetic surfacing material found to be defective as a result of faulty workmanship and/or material failure shall be replaced or repaired at no charge, upon written notification within the guarantee period.

END OF SECTION

BSS 2000RE
Embedded Resurfacing
Synthetic Track Surfacing System Specifications

Part 1 – General

1.1 Scope

A. The synthetic surfacing contractor shall furnish all labor, materials, equipment, supervision and services necessary for the proper completion of the **BSS 2000RE Embedded Resurfacing** synthetic track system and related work indicated on the drawings and specified herein.

B. The synthetic surfacing contractor shall refer to the drawings for the required locations of synthetic track surfacing to be installed. All quantities and dimensions shall be field verified by the synthetic surfacing contractor.

1.2 Specific Scope of Work

A. Install a full depth poured-in-place two-component, UV stabilized elastomeric polyurethane synthetic resurfacing system with Hobart textured finish.

B. Layout and paint all track lines and event markings as required and specified by current IAAF and NCAA rules.

1.3 Coordination

A. The synthetic surfacing contractor shall coordinate the work specified with an authorized and appointed representative of the owner so as to perform the work during a period and in a manner acceptable to the owner.

Part 2 - Quality Assurance

2.1 Contractor and Manufacturer Qualifications

A. The CONTRACTOR and the MANUFACTURER must be the same.

B. The CONTRACTOR must have a minimum of 10 years experience in the installation of poured-in-place, two-component elastomeric polyurethane synthetic track surfacing.

C. The CONTRACTOR shall be able to furnish evidence that they have been in business for a period of not less than 3 years, under the present name, and if required, furnish financial statements for each of the past 3 years.

D. The CONTRACTOR must have installed a minimum of 10 outdoor track facilities in the last 2 years using the exact, poured-in-place, two-component elastomeric polyurethane synthetic track resurfacing, as specified herein with the contractor bidding this project.

E. The MANUFACTURER must have a minimum of 10 years of experience with compound two-part polyurethane for athletic surfaces.

F. CONTRACTOR is to provide a list of completed facilities, minimum of 10 which are certified to meet IAAF/NCAA rules & regulations, utilizing the same product as specified.

G. The MANUFACTURER must offer a minimum of six (6) IAAF Certified Track Systems.

H. All polyurethane components must be MANUFACTURED in an ISO 9001 Certified facility.

I. All polyurethane components must be MANUFACTURED in the United States at the headquarters of the CONTRACTOR.

J. The CONTRACTOR must have installed a minimum of two (2) Class I IAAF Certified outdoor tracks within the United States.

2.2 Submittals

The following submittals must be received with bid submittal:

A. Standard printed specifications of the synthetic track surfacing system to be installed on this project.

B. An affidavit attesting that the synthetic track surfacing material to be installed meets the requirements defined by the manufacturers currently published specifications and any modifications outlined in those technical specifications.

C. A synthetic track surfacing system sample, 12” x 12”in size, of the same synthetic track surfacing system to be installed on this project.

D. A list of completed facilities, including the installing supervisor, of the exact Dual Durometer synthetic track surfacing system.

Part 3 – Materials

3.1 Elastomeric Polyurethane

A. BEYPUR, the two-component U.V. stabilized elastomeric polyurethane compounded from polyol and isocyanate components, based on one hundred percent Methylene Diphenyl Isocyanate (MDI). No Toluene Diisocyanate Isocyanate (TDI) will be allowed.

B. The elastomeric polyurethane shall be red in color.

3.2 EPDM Granulate

A. The EPDM granulates shall be approximately 1 to 3mm in size.

B. The EPDM granulates and the U.V. stabilized elastomeric polyurethane shall be color matched.

3.3 Line Marking Paint

A. Manufacturers recommended pigmented paint.

Part 4 – Installation

4.1 Surface Preparation

A. Prior to the application of the resurfacing layer, the existing polyurethane surface shall be inspected for conformity to planarity requirements. The surface shall not deviate more than 1/8 inch in 10 feet from the specified grade when checked with a 10-foot straightedge. An impermeable polyurethane surface may also be flooded with water to determine if any “bird baths” or low areas exist.

B. The owner should verify that the surface tolerances meet all specifications issued by the appropriate sanctioning or governing body such as IAAF, NCAA, NFSHSA, TAC, etc.

C. The area to be surfaced shall be clean and free of any loose or foreign particles (dirt, oil, etc.) prior to the commencement of work. The surface is usually cleaned by use of a power blower and high-pressure washer.

4.2 Thickness

A. Total thickness of the **BSS 2000RE Embedded Resurfacing** synthetic track system shall average 7mm.

4.3 Equipment

A. The **BSS 2000RE Embedded Resurfacing** synthetic track system components shall be processed and installed by specially designed machinery with automatic electronic portioning, which provides continuous mixing, feeding and finishing for accurate quality controlled installation.

B. No hand mixing is allowed.

4.4 Materials

A. Leveling Layer

The 2mm leveling layer material shall be two-component polyurethane that is self-leveling, compounded from a proprietary pigmented polyol and MDI based, "TDI Free," isocyanate and designed to patch and bond existing track and field surfaces to the original substrate and level low areas of the existing surface. The liquid polyurethane shall contain no mercury, lead, or any other heavy metals added by design.

B. Resurfacing Layer

The 1 to 3 millimeter EPDM granules shall be mechanically integrated with a UV stabilized elastomeric polyurethane to the full depth of the 5mm resurfacing. The resilient wear layer textured finish shall be a dense matrix of embedded EPDM granules.

4.5 Site Conditions

A. Installation shall not take place if adjacent or concurrent construction generates excessive dust, abrasives or any other by-product that, in the opinion of the installer, would be harmful to the track material, until completion of such works.

B. Apply Synthetic Track Surfacing in dry weather when the existing surface and atmospheric temperatures are fifty (50) degrees Fahrenheit or above, and are anticipated to remain above fifty (50) degrees Fahrenheit for twenty-four (24) hours after completing application.

C. The maximum temperature cannot exceed 105 degrees at any point during a 24 - hour period.

D. Rain cannot be falling. If there is a threat of rain, work shall cease until dry conditions can be re-established on the track surface. Work is to proceed only when adequate curing can be guaranteed by the manufacturer.

Part 5 – Line Striping and Event Markings

5.1 Layout

A. Line striping and event markings shall be laid out in accordance with current IAAF and NCAA rules.

5.2 Certification

A. Upon completion of the installation, the owner shall be supplied with all necessary computations and drawings as well as a letter of certification attesting to the accuracy of the markings.

Part 6 – Guarantee

A. Synthetic track surfacing system shall be fully guaranteed against faulty workmanship and material failure for a period of five (5) years from the date of acceptance.

B. Synthetic surfacing material found to be defective as a result of faulty workmanship and/or material failure shall be replaced or repaired at no charge, upon written notification within the guarantee period.

END OF SECTION

BSS 1000ML
13mm Embedded
Multi-Layered Track Surfacing System Specification

Part 1 – General

1.1 Scope

A. The synthetic surfacing contractor shall furnish all labor, materials, equipment, supervision and services necessary for the proper completion of the **BSS 1000ML Multi-Layered** synthetic track surfacing and related work indicated on the drawings and specified herein.

B. The synthetic surfacing contractor shall refer to the drawings for the required locations of synthetic track surfacing to be installed. All quantities and dimensions are to be field verified by the synthetic surfacing contractor prior to installation.

1.2 Specific Scope of Work

A. Install an IAAF approved, full pour two-component, UV stabilized elastomeric polyurethane layered synthetic surfacing system with embedded textured finish.

B. Layout and paint all track lines and event markings as required and specified by current IAAF and NCAA rules.

1.3 Coordination

A. The synthetic surfacing contractor shall coordinate the work specified with an authorized and appointed representative of the owner so as to perform the work during a period and in a manner acceptable to the owner.

Part 2 – Codes and Standards

2.1 Applicable Publications

A. Codes and standards follow the current guidelines set forth by the International Amateur Athletic Federation (IAAF) and the National Collegiate Athletic Association (NCAA), along with the current material testing

BEYNON
A Tarkett Sports Company

guidelines as published by the American Society of Testing and Materials (ASTM).

2.2 Performance Standards

The new synthetic track surfacing system shall exhibit the following minimum performance standards as required by IAAF:

A.	Average Thickness:	13mm or as specified by the IAAF
B.	Force Reduction:	35-50%
C.	Vertical Deformation:	0.6mm-2.5mm
D.	Coefficient of Friction:	≥ 0.5 (47 TRRL Scale)
E.	Tensile Strength:	≥ 0.5 Mpa
F.	Elongation:	≥ 40%

Part 3 - Quality Assurance

3.1 Contractor and Manufacturer Qualifications

A. The CONTRACTOR and the MANUFACTURER must be the same corporation.

B. The CONTRACTOR must have a minimum of 10 years experience in the installation of poured-in-place, two-component elastomeric polyurethane synthetic track surfacing.

C. The CONTRACTOR shall be able to furnish evidence that they have been in business for a period of not less than 3 years, under the present name, and if required, furnish financial statements for each of the past 3 years.

D. The CONTRACTOR must have installed a minimum of 10 outdoor track facilities in the last 2 years using, IAAF certified, poured-in-place, two-component elastomeric polyurethane synthetic track surfacing.

E. The MANUFACTURER must have a minimum of 10 years of experience compounding two-part polyurethane for athletic surfaces.

F. The CONTRACTOR is required to provide documentation that shows the selected specified and installed product meets current IAAF Performance Standards for Synthetic Surfaced Athletics Tracks (Outdoor) and is certified in terms of the IAAF certification system.

G. CONTRACTOR is to provide a list of completed facilities, minimum of 10 which are certified to meet IAAF/NCAA rules & regulations, utilizing IAAF

certified, poured-in-place, two-component elastomeric polyurethane synthetic track surfacing.

H. The MANUFACTURER must offer a minimum of seven (7) IAAF Certified Track Systems.

I. All polyurethane components must be MANUFACTURED in the United States in an **ISO 9001:2008 Certified** facility to ensure the highest quality materials.

J. The CONTRACTOR must have installed a minimum of three (3) Class I IAAF Certified outdoor tracks within the United States.

3.2 Submittals

The following submittals must be received prior to contract award:

A. Standard printed specifications of the synthetic track surfacing system to be installed on this project.

B. An affidavit attesting that the synthetic track surfacing material to be installed meets the requirements defined by the manufacturers currently published specifications and any modifications outlined within those technical specifications.

C. A synthetic track surfacing system sample, 12” x 12”in size, of the same synthetic track surfacing system to be installed on this project.

D. A list of completed facilities, including the installing supervisor, of IAAF certified, poured-in-place, two-component elastomeric polyurethane synthetic track surfacing.

Part 4 – Materials

4.1 Elastomeric Polyurethane

A. BEYPUR, the two-component U.V. stabilized elastomeric polyurethane compounded from polyol and isocyanate components, based on one hundred percent Methylene Diphenyl Isocyanate (MDI). No Toluene Diisocyanate Isocyanate (TDI) will be allowed.

B. The elastomeric polyurethane shall be red in color.

4.2 EPDM Granulate

A. The EPDM granulates shall be approximately 1 to 3mm in size.

B. The EPDM granulates and the U.V. stabilized elastomeric polyurethane shall be color matched.

4.3 Rubber Granulate

A. The rubber granulate in the base and middle layers shall be specifically graded Styrene Butadiene Rubber (SBR). Final gradation is to be 1 to 3mm granulated SBR. SBR is to be dried to no less than 2.5% moisture and sealed in bags.

4.4 Line Marking Paint

A. Manufacturers recommended pigmented paint.

Part 5 – Installation

5.1 Subbase Requirements

A. Asphalt Compaction

a. The Synthetic Track Surfacing System shall be laid on an approved subbase. The General Contractor shall provide compaction test results of 92-96% for the installed subbase and asphalt surface.

b. For NCAA certification the following criteria must be followed. The track surface, i.e. asphalt substrate, shall not vary from planned cross slope by more than +/- 0.2%, with a maximum lateral slope outside to inside of 1%, and a maximum slope of 0.1% in any running direction. The finished asphalt shall not vary under a 10' straight edge more than 1/8”.

c. It should be the responsibility of the asphalt-paving contractor to flood the surface immediately after the asphalt is capable of handling traffic. If, after 20 minutes of drying time, there are birdbaths evident, it shall be the responsibility of the architect, in conjunction with the surfacing contractor, to determine the method of correction. No cold tar patching, skin patching or sand mix patching will be acceptable.

B. Asphalt Quality

a. No Recycled Asphalt Pavement (RAP) shall be used in the wear course asphalt mix design as the inclusion of RAP as an off-set to virgin asphalt binder results in a brittle hot-mix asphalt (HMA) with significantly lower tensile strength and fatigue resistance. The sports surfacing contractor will not be held responsible for asphalt failures resulting from the inclusion RAP in the HMA mix design of the wear course.

b. Any oil spills (hydraulic, diesel, motor oil, etc.) must be completely removed, either by chipping out or removing and replacing with new, keyed in asphalt. The minimum depth of any asphalt replacement shall be one inch. The curing time for the asphalt base is 28 days. It shall be the responsibility of the surfacing contractor to determine if the asphalt substrate has cured sufficiently prior to the application of polyurethane surfacing system.

C. Responsibility of Others

a. It shall be the responsibility of the general contractor to determine if the asphalt substrate meets all design specifications, i.e. cross slopes, planarity and specific project criteria. After all the above conditions are met, the synthetic surfacing contractor must, in writing, accept the planarity of the asphalt receiving base, before work can commence.

5.2 Thickness

A. Total thickness of the **BSS 1000ML** Multi-Layered synthetic track surfacing system shall average 13mm or as specified by the IAAF.

5.3 Equipment

A. The **BSS 1000ML** Multi-Layered synthetic track surfacing system components shall be processed and installed by specially designed machinery with automatic electronic portioning, which provides continuous mixing, feeding and finishing for accurate quality controlled installation.

5.4 Materials

A. Force Reduction Layers

a. Base Layer: UV stabilized elastomeric polyurethane shall be flow applied using a squeegee or notched trowel.

b. Broadcast to excess with 1to 3 millimeter Black SBR rubber for thorough coverage. Ensure the rubber is totally dry. Once cured the excess rubber granules are removed by means of mechanical sweeper.

c. Mid Layer: After the base layer application has cured to tack-free, an additional layer of UV stabilized elastomeric polyurethane is flow applied.

d. The 1 to 3 millimeter Black SBR rubber is again broadcast to excess to provide thorough coverage. Once cured the excess rubber granules are removed by means of mechanical sweeper.

B. Resilient Wearing Layer

a. The 1 to 3 millimeter EPDM granules shall be broadcast to excess into UV stabilized elastomeric polyurethane to the full depth of the wearing layer. The resilient textured finish shall be a dense matrix of embedded EPDM granules.

5.5 Site Conditions

A. Installation shall not take place if adjacent or concurrent construction generates excessive dust, abrasives or any other by-product that, in the opinion of the installer, would be harmful to the track material, until completion of such works.

B. Apply Synthetic Track Surfacing in dry weather when pavement and atmospheric temperatures are fifty (50) degrees Fahrenheit or above, and are anticipated to remain above fifty (50) degrees Fahrenheit for twenty-four (24) hours after completing application.

C. The maximum temperature cannot exceed 105 degrees at any point during a 24 - hour period.

D. Rain cannot be falling. If there is a threat of rain, work shall cease until dry conditions can be re-established on the track pavement. Work is to proceed only when adequate curing can be guaranteed by the manufacturer.

Part 6 – Line Striping and Event Markings

6.1 Layout

A. Line striping and event markings shall be laid out in accordance with current IAAF and NCAA rules.

6.2 Certification

A. Upon completion of the installation, the owner shall be supplied with all necessary computations and drawings as well as a letter of certification attesting to the accuracy of the markings.

Part 7 – Guarantee

A. Synthetic track surfacing system shall be fully guaranteed against faulty workmanship and material failure for a period of five (5) years from the date of acceptance.

B. Synthetic surfacing material found to be defective as a result of faulty workmanship and/or material failure shall be replaced or repaired at no charge, upon written notification within the guarantee period.

END OF SECTION

SPORTSFIELD SPECIALTIES
WWW.SPORTSFIELDSPECIALTIES.COM

Excellence from Design to Installation
41155 State Highway 10, PO Box 231, Delhi, NY 13753 CALL: 888-975-3343 FAX: 607-746-8481

Optional Equipment:
SGMobile® Integrated Soccer Goal Wheel Kit - SGMKR
Soccer Goal Safety System - SG2S®
United States Patent #7,331,880, Issued February 19, 2008
United States Patent #7,527,569, Issued May 5, 2009
United States Patent #8,777,784, Issued July 15, 2014

Meets and exceeds ASTM F2950-14 Standard Safety and Performance Specification for Soccer Goals and ASTM F1938-98 Standard Guide for Safer Use of Movable Soccer Goals

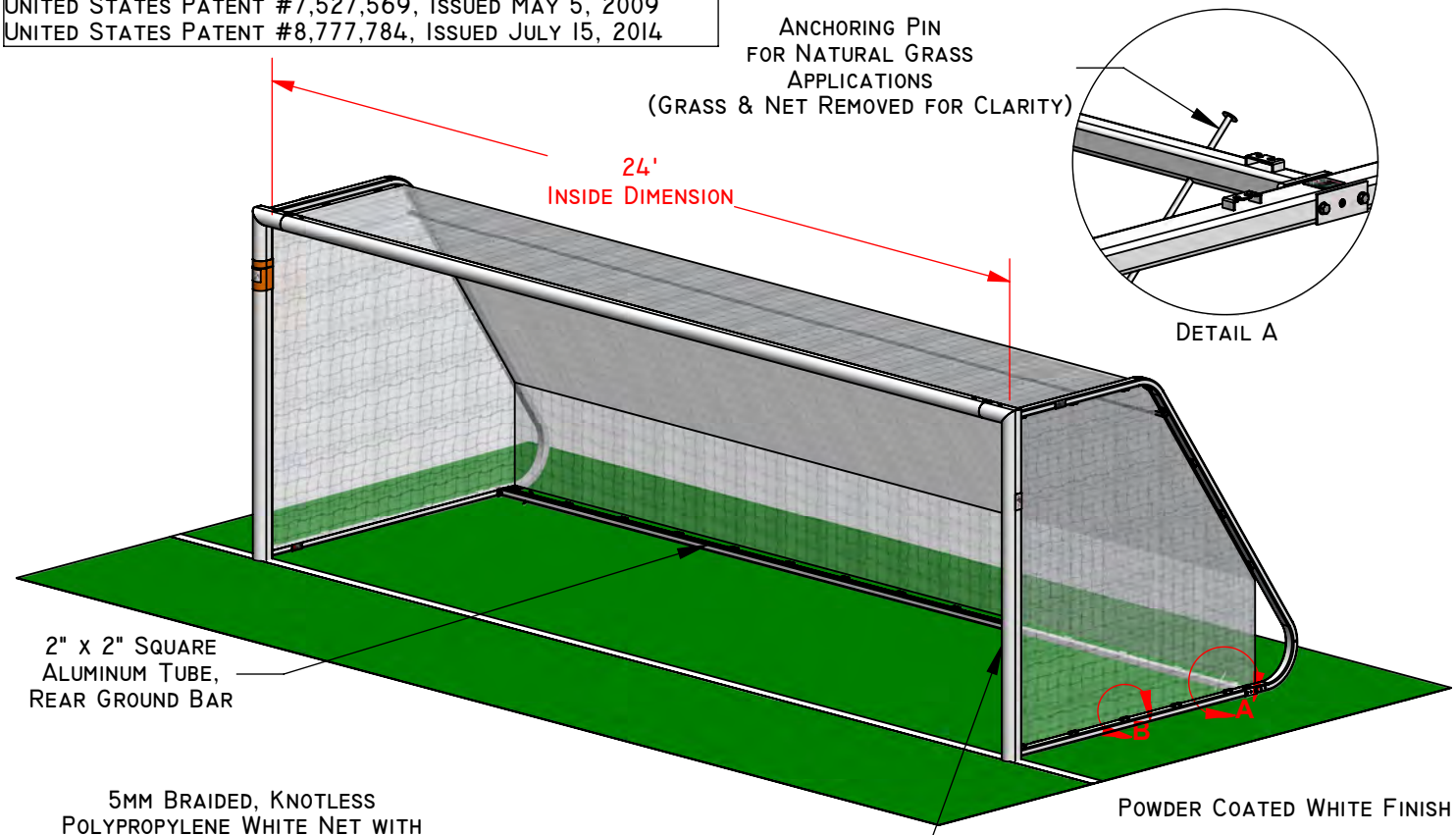

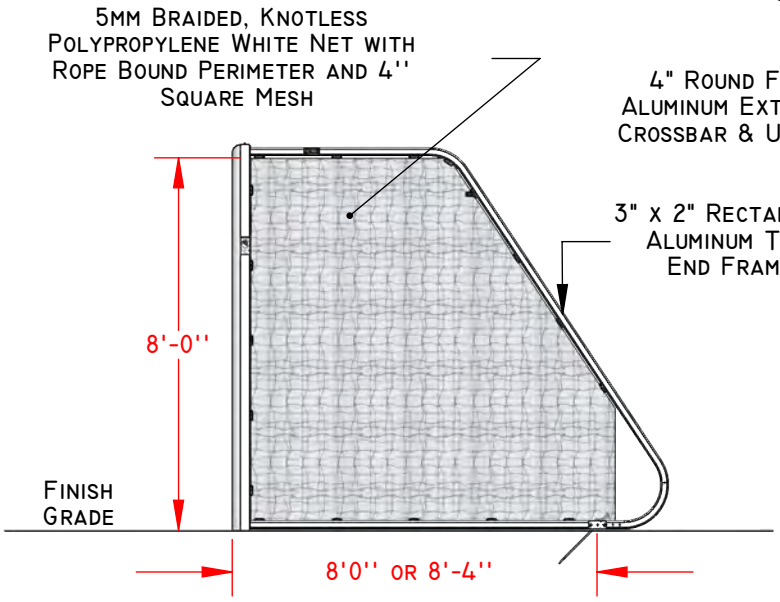

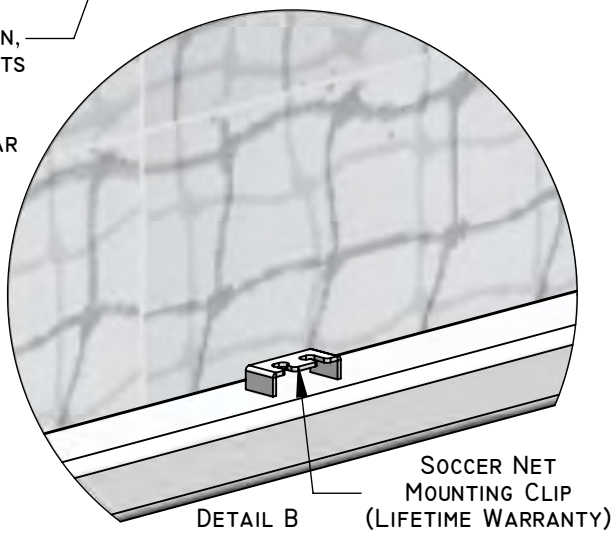

PROPRIETARY AND CONFIDENTIAL
THE INFORMATION CONTAINED IN THIS DRAWING IS THE SOLE PROPERTY OF SPORTSFIELD SPECIALTIES INC. ANY REPRODUCTION IN PART OR AS A WHOLE WITHOUT THE WRITTEN PERMISSION OF SPORTSFIELD SPECIALTIES INC. IS PROHIBITED.

SG824R (SG4950) 8' x 24' Regulation Size Round Faced Soccer Goal

Not To Scale

Sportsfield Specialties Inc 08202018

SPORTSFIELD SPECIALTIES
WWW.SPORTSFIELDSPECIALTIES.COM
Excellence from Design to Installation
41155 State Highway 10, PO Box 231, Delhi, NY 13753 CALL: 888-975-3343 FAX: 607-746-8481

FOUNDATION REQUIREMENTS BASED ON LOCAL CODES AND SOIL CONDITIONS

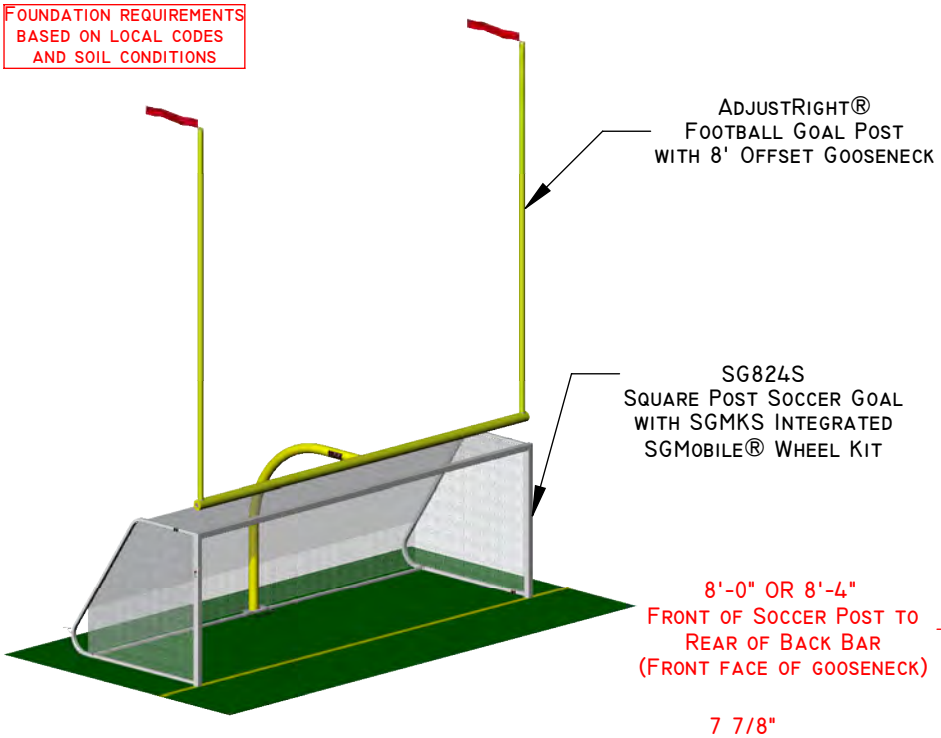

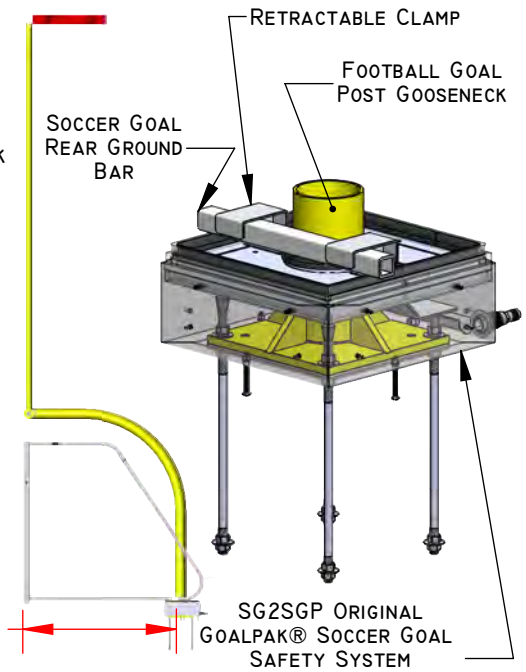

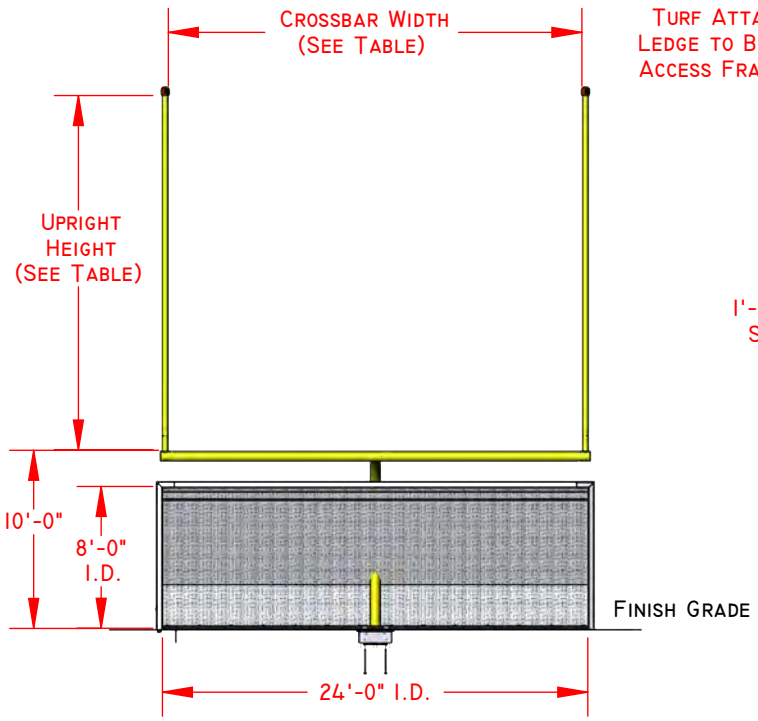

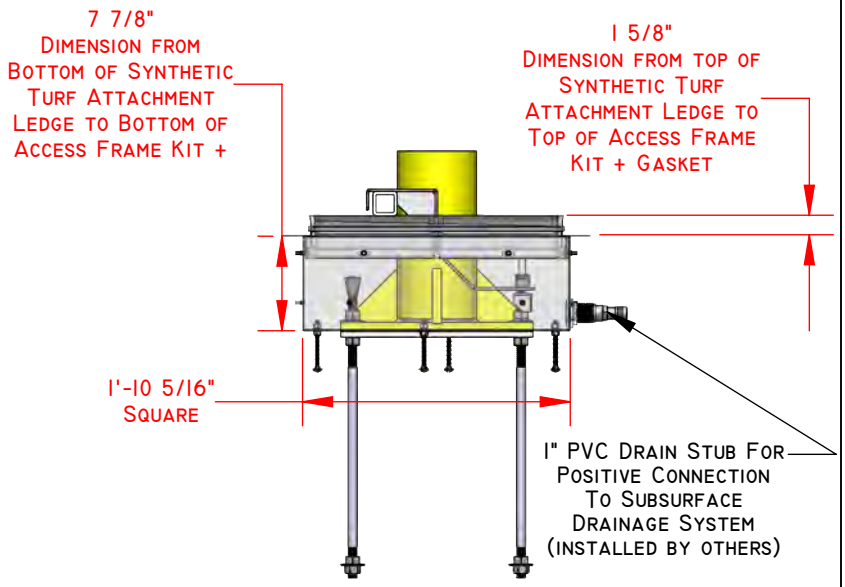

PART NO.	UPRIGHT HEIGHT	MODEL	CROSSBAR WIDTH (I.D.)
GPKS20ADJPL	20'-0"	ADJUSTABLE	18'-6" / 23'-4"
GPKS20COLPL	20'-0"	COLLEGE	18'-6"
GPKS20HSPL	20'-0"	HIGH SCHOOL	23'-4"
GPKS30ADJPL	30'-0"	ADJUSTABLE	18'-6" / 23'-4"
GPKS30COLPL	30'-0"	COLLEGE	18'-6"
GPKS30HSPL	30'-0"	HIGH SCHOOL	23'-4"

PROPRIETARY AND CONFIDENTIAL
THE INFORMATION CONTAINED IN THIS DRAWING IS THE SOLE PROPERTY OF SPORTSFIELD SPECIALTIES INC. ANY REPRODUCTION IN PART OR AS A WHOLE WITHOUT THE WRITTEN PERMISSION OF SPORTSFIELD SPECIALTIES INC. IS PROHIBITED.

ORIGINAL GOALPAK® FOOTBALL / SQUARE SOCCER GOAL SYSTEM, BASE PLATED MOUNTED

NOT TO SCALE

SPORTSFIELD SPECIALTIES INC 12082017

BSS 50 (ATLAS POLY-MAT)
Product Specifications

PART 1 – GENERAL

1.1 SUMMARY

A. Product Name: BSS 50

B. Product Description: Pour-in-place, all-weather synthetic track surface consisting of permeable polyurethane bound rubber base mat.

C. Scope of Work: Furnish all required labor, materials and equipment to successfully install the specified all-weather synthetic track surface including striping and markings to a base properly prepared by others.

1.2 RELATED WORK

A. Earthwork
B. Drainage
C. Asphaltic Concrete Paving
D. Cast-in-Place Concrete
E. Synthetic Turf

1.3 REFERENCE STANDARDS

A. The work shall conform to the standards for track construction as prescribed or approved by the appropriate governing body; NFHS, NCAA, or IAAF.
   1. NFSHSA *Track and Field Rules.*
   2. ASBA *Running Tracks Construction and Maintenance Manual.*

1.4 SUBMITTALS

A. Product Data
B. Operation and Maintenance Manual
C. Warranty

1.5 QUALITY ASSURANCE

A. Synthetic surfacing contractor (SSC) shall be licensed and bonded and possess a valid contractor's license in the state where Work is performed.

B. SSC shall have a minimum of 5 years experience installing the specified all-weather track surface under the same corporate name as current operations.

1.6 PROJECT CONDITIONS

A. SSC, General Contractor (GC) and/or Owner, shall conduct a pre-construction meeting to review project conditions prior to dispatch of the SSC's installation team.

B. Synthetic surface base asphalt/concrete.
   1. The base asphalt and/or concrete shall meet the standards set by the Architect/Engineer and described in the product specifications.
   2. Allow minimum of 14 days cure on new asphalt, 28 days cure on new concrete prior to application of specified synthetic track surface.
   3. When surfacing on new asphalt, the asphalt contractor shall provide a flood test of the asphalt base.
   4. Repair work required on the base shall be approved by the Architect/Engineer.
   5. GC and/or Owner shall be responsible to protect the base from activities and traffic that may damage the base or leave dirt, oil or other foreign material on the base prior to application of the synthetic track surface.

C. Weather
   1. Apply the synthetic track surface only during favorable weather conditions.
   2. No application of the synthetic track surface shall be conducted during rainfall, when rain is imminent, when freezing temperatures are forecasted or exist, or when gusting winds are occurring.
   3. Work is to progress only when the SSC can guarantee successful cure of the materials.

D. During surface installation and striping, all irrigation systems shall be shut-off or controlled so that no water falls on the track or event areas.

E. During set-up, installation and striping, the GC and/or Owner shall be responsible to have the entire track and other pertinent areas closed and secured of all activities 24 hours per day until completion of the project.

1.7 WARRANTY

A. Manufacturer's and Installer's Warranty
   1. The warranty on the all-weather synthetic track surface shall endure for two (2) years from completion of installation.
   2. The warranty is to be provided directly by the SSC to the Owner.
   3. The warranty shall cover defects in materials and workmanship not deemed as ordinary wear on a running track.

.

B. Warranty Bond not required.

PART 2 – PRODUCTS

2.1 MANUFACTURERS

A. Beynon Sports, 19600 SW 129th Ave. Suite A, Tualatin, OR 97092,
Tel: 503-691-2484, Fax: 503-692-0491, www.beynonsports.com

2.2 MATERIALS

A. Rubber
1. Base mat rubber shall be SBR granules with a 1.0-3.0mm gradation.
2. Color shall be black

B. Binder
1. Base mat primer shall be polyurethane compatible with base mat materials.
2. Base mat binder shall be polyurethane moisture cure, MDI based, 100% solids.
3. Color shall be black.

C. Marking and Line Paint
1. The paint shall be formulated to be compatible with synthetic track surface materials.
2. Colors shall be as prescribed or approved by the appropriate governing body; NFHS, NCAA, or IAAF.

PART 3 – EXECUTION

3.1 EXAMINATION

A. SSC shall examine project conditions to ensure successful installation of the synthetic track surface. Any deficiencies shall be reported to the GC and/or Owner for corrective action.

3.2 PREPARATION

B. SSC to protect adjacent areas from contamination of synthetic track surfacing materials due to installation procedures.

C. SSC shall prepare the base surface using a power blower to remove surface dirt. Cleaning necessary to remove embedded dirt, oil, or other foreign material shall be the responsibility of the GC and/or Owner.

3.3 INSTALLATION

A. Primer
1. Apply base mat primer uniformly at a rate of not less than 0.3 pounds per square yard of the synthetic track surface area.
2. Allow a minimum of 30 minutes cure before application of the base mat materials.

B. Base Mat
1. The base mat shall have a minimum weight of 18 pounds per square yard; consisting of 20 parts base mat binder and 100 parts base mat rubber, by weight.
2. The materials shall be prepared in a mechanical mixer, to assure complete coverage of each rubber particle by the binding agent, and mixed until a homogenous mixture is obtained.
3. Mixed materials making up the base mat shall be applied to the base surface by a mechanically operated finishing machine which shall have an electrically heated screed.
4. The base mat will be applied in one layer only to a minimum depth of 12 mm.

C. Striping
   1. Striping Contractor shall verify with Owner's representative the exact locations, size, shape, and color of the lines and markings before proceeding with striping and markings.
   2. Engineer the layout of lane lines, starting lines, and markings as prescribed or approved by the Owner's representative, Architect/Engineer and the appropriate governing body; NFHS, NCAA, or IAAF.
   3. All lines and markings shall be spray applied by experienced personnel utilizing equipment manufactured for line striping. Striping lines and markings shall have true sharp edges.

3.4 CLEANING

A. Upon completion of work remove all containers, surplus materials, and installation debris.

B. Leave area of work in clean orderly condition ready for use by Owner.

FieldTurf USA Inc

OMNISPORTS
6.5 mm

Omnisports 6.5 mm is a vinyl multi-use sports floor containing a non-woven fiberglass layer and PVC foam backing. Its slightly textured surface is protected with Top Clean xp®, allowing easy maintenance.

Warranty Protection

- 10 year product coverage and 15 year wear layer coverage. Refer to sample warranty document for complete coverage details.

Environmental Facts and LEED

- For environmental facts and LEED credits, visit: tarkettsportsindoor.com/en/specs-and-data/environmental-fact-sheets and tarkettsportsindoor.com/en/specs-and-data/leed-information.

Maintenance Instructions

- For a complete maintenance guide, visit: tarkettsportsindoor.com/en/specs-and-data/care-and-maintenance.

Installation Methods

- GreenLay™: perimeter glue installation requiring only 2% of the surface area to be glued with Tarkett's solvent-free Multi-Poxy adhesive (moisture tolerance: 92% RH per ASTM F2170)
- Full Adhesive: full glue installation using Tarkett's solvent-free Multi-Poxy adhesive over the entire surface area (moisture tolerance: 92% RH per ASTM F2170)
- Tarkolay: installation over Tarkolay moisture barrier (moisture tolerance: 98% RH per ASTM F2170)

888.364.6541
tarkettsportsindoor.com

Sports Characteristics

Property	Standard	Value
Surface Finish Effect	ASTM F2772-11	Passed
Force Reduction	ASTM F2772-11	Class 2
Vertical Deformation	ASTM F2772-11	Passed
Ball Rebound	ASTM F2772-11	Passed

Technical Characteristics

Property	Standard	Value
Reaction to Fire	ASTM E648	Class 1 (Radiant Panel)
Below-Room Sound Insulation	ISO 717/02	+/= 19 dB
In-Room Sound Insulation	NF S31-074	61 dB
Static Load Tolerance	ASTM F970 (modified)	200 psi
Indentation Resistance	EN 1516	0.21 mm — 0.40 mm
Rolling Load	EN 1569	≤ 0.5 mm (No Degradation)
Resistance to Impact	EN 1517	No Degradation
Taber Abrasion	ASTM D3389	0.02 g (1,000 Cycles)
Stain Resistance	ASTM F925	Excellent
Roll Width	EN 426/EN 427	2 m (6.5')
Roll Length	EN 426/EN 427	26 m (85.3')
Thickness	EN 428/EN 429	6.5 mm (0.256")
Weight	EN 430	4.7 kg/m² (0.96 lbs./sq. ft.)
Wear Layer	EN 429	0.70 mm
Microbial Resistance	ASTM G21 (backing)	No growth

Compatible substrates include: properly constructed and prepared concrete, wood, asphalt, and cementitious underlayments. Refer to current installation guidelines, ASTM F710, ACI 302.2R, and other industry standard recommendations for more information. Tarkett Sports reserves the right to modify these specifications without affecting their compliance with standards. Some results may vary in relation to certain flexibilities found within specified testing procedures and manufacturing tolerances.

Available Colors for Omnisports 6.5 mm

Light Maple	Beech◊	Golden Maple	Classic Oak◊	Gunstock Oak◊	Dark Beech◊
Grey Maple	Mint Green Maple	Green Maple	Sky Blue Maple	Blue Maple	Red Maple
Yellow	Orange	Dark Orange	Purple	Magenta	Red
Grey	Black	Brown	Sky Blue	Night Blue	Royal Blue
Forest Green	Mint Green	Light Green	Teal		

The colors presented here are representations only. An actual sample is recommended for exact color evaluation and matching.
◊This pattern has a 3" wide plank. Maple patterns have a width of 2 1/4".

Quick Ship

SECTION 09645
ARCHITECTURAL SPECIFICATIONS FOR INDOOR RESILIENT ATHLETIC SURFACING

PART 1 – GENERAL

1.1 *SECTION INCLUDES*

A. Supply and installation of the indoor resilient multipurpose surfacing
B. Application of the game lines
C. References for the construction and preparation of concrete slabs to receive resilient flooring.

1.2 *SUBMITTALS*

A. Product Data:
Manufacturer's promotional brochures, specifications and installation instructions
B. Samples:
1. Submit for selection and approval three (3) sets of the indoor resilient multipurpose surfacing, manufacturer's brochures, samples or sample boards of all of the available colors, textures and styles.
2. Submit color samples of all the available game line paint colors for selection and approval.
C. Closeout Submittals:
1. Submit three (3) copies of the indoor resilient multipurpose surfacing and manufacturer's maintenance instructions.
2. Submit three (3) copies of the material and installation warranties as specified.

1.3 *QUALITY ASSURANCE*

A. Qualifications:
1. The indoor resilient multipurpose surfacing shall have been actively marketed for a minimum of ten (10) years.
2. The indoor resilient multipurpose surfacing shall be manufactured in an ISO 9001 certified plant.
4. The indoor resilient multipurpose surfacing supplier shall be an established firm, experienced in the field, and appointed as a distributor by the manufacturer of the indoor resilient multipurpose surfacing.
5. The installer of the indoor resilient multipurpose surfacing shall have a minimum of five (5) years of experience in the field installing indoor resilient multipurpose surfacing and have worked on at least five (5) projects of similar size, type and complexity.
B. Certifications:
1. Installer to submit the indoor resilient athletic surfacing manufacturer's certification attesting that they are an approved installer of the indoor resilient multipurpose surfacing.
2. The indoor resilient multipurpose surfacing manufacturer to submit official ISO 9001 certification for the facility in which the indoor resilient multipurpose surfacing is manufactured.

C. Testing:
Tests shall be relative for multi-purpose use with certificates from independent testing resources to be made available upon request. Test results shall be no more than 5 years old and performed according to ASTM standard testing procedures.

B. Certifications:
3. Installer to submit the indoor resilient athletic surfacing manufacturer's or distributor's certification attesting that they are an approved installer of the indoor resilient multipurpose surfacing.

C. Testing:
Tests shall be relative for multi-purpose use with certificates from independent testing resources to be made available upon request. Test results shall be no more than 5 years old and performed according to ASTM F2772 standard testing procedures for force reduction, ball bounce, vertical deformation, and surface finish effect.

1.4 *DELIVERY, STORAGE AND HANDLING*

A. Delivery:
Material shall not be delivered until all related work is in place and finished and/or proper storage facilities and conditions can be provided and guaranteed stable according to Fieldturf' recommendations.

B. Storage:
Store the material in a secure, clean and dry location. Maintain temperature between 55° and 85° Fahrenheit.

1.5 *PROJECT/SITE CONDITIONS*

A. It is the responsibility of the general contractor/construction manager to maintain project/site conditions acceptable for the installation of the indoor resilient multipurpose flooring.

B. The area in which the indoor resilient multipurpose surfacing will be installed shall be dry and weather tight. Permanent heat, light and ventilation shall be installed and operable.

C. All other trades shall have completed their work prior to the installation of the resilient athletic flooring. The general contractor or Construction Manager shall maintain a secure and clean working environment before, during and after the installation. Suspension of other trades' work may be authorized providing their work will not damage the new flooring.

D. Maintain a stable room temperature of at least 65°F for a minimum of one (1) week prior to, during, and thereafter installation.

E. An effective low-permeance vapor barrier is placed directly beneath the concrete subfloor. For "on" or "below grade" installations, it is recommended to provide a permanent vapor barrier resistant to long term hydrostatic pressure/moisture exposure. Protrusions should be sealed to prevent moisture migration into the slab. Moisture should not be allowed to enter the slab after the completed construction.

F. Concrete subfloor surface pH level within the 7 to 10 range dependent upon installation type.
G. Concrete subfloor should be no greater than 1/8" within a 10 ft diameter. This tolerance can be measured in accordance with ASTM E1155. A specified (F_F) of 50 and an (F_L) of 30 should reach this degree of floor flatness and floor level. There is no numerical correlation between F numbers and the deviation from the straight edge, however the above specified numbers should achieve a flat floor with minimal deviation in the slab. Reference ACI 117 and ACI 302.1R. The general contractor should provide a certificate of compliance with the above recommendations.
H. Concrete subfloor must be clean and free of all foreign materials or objects including, but not limited to, curing compounds and sealers.
I. Fill cracks, grooves, voids, depressions, and other minor imperfections with Ardex (or equal) cement-based patching/leveling compounds. Follow the manufacturer's directions. Moveable joints must be treated utilizing specific transitioning joint devices depending upon the architect's recommendations. Follow current ASTM F710 guidelines for the preparation of concrete slabs to receive resilient flooring.
J. Refer to ACI 302.2R "Guidelines for Concrete Slabs that Receive Moisture-Sensitive Flooring Materials" for concrete design and construction.
K. Concrete slab shall be fortified with continual steel reinforcement. Fiber reinforcement alone shall not be considered adequate fortification.

1.6 *WARRANTY*

A. Materials:
The indoor resilient athletic surfacing shall be covered by the manufacturer against product defects for 8 years. The manufacturer of the indoor resilient multipurpose surfacing must provide this warranty upon request.
B. Installation:
The installation of the indoor resilient multipurpose surfacing shall be covered against poor workmanship and faulty installation by a two (2) year written, limited warranty provided by the contractor performing/overseeing the installation.

1.7 *ADDITIONAL MATERIALS*

Furnish to the owner additional materials containing a total of at least 1% of each different color or design of the indoor resilient athletic surfacing used on the project.

1.8 *LEED™ CERTIFICATION*

The indoor resilient athletic surfacing should be able to help this facility to achieve points towards *LEED™* certification.

LEED categories positively affected by the indoor resilient athletic surfacing:

Product Type			PU with Recycled Base Layer
Building Reuse Maintain Interior Nonstructural Elements	**MR 1.2**	Renovation	1

Construction Waste Management	**MR 2**	Renovation	2
Recycled Content	**MR 4** **20% - 2 points**	New/Renovation	2
Regional Materials	**MR 5** **20% - 2 points**	New/Renovation	2
Materials and Resources Rapidly Renewable Materials	**MR 6**	New/Renovation	1
Indoor Environmental Air Quality Low VOC Adhesives/Sealants	**IEQ 4.1**	New/Renovation	1
Low-emitting Materials Paints and Coatings	**IEQ 4.2**	New/Renovation	1

PART 2 - PRODUCTS

2.1 *MANUFACTURERS*

The basis of the design for the indoor resilient multipurpose surfacing is Polyturf Plus Pad and Pour as provided by Fieldturf or equal. Product shall be manufactured by an ISO 9001 company.

2.2 *MATERIALS.*

A.) Flooring System:

Polyturf Plus 7+2 (9mm total thickness) consists of a recycled resilient sheet force reduction layer integrated with seamless, liquid applied, and self-leveling 2 mm polyurethane topcoat.

A durable protective color coat shall be applied to a thickness of approximately 7 mils. The finished product shall be a seamless surface heterogeneous resilient multipurpose synthetic flooring system. System shall comply with the following criteria. Colors to be selected from manufacturer's standard range.

SECTION 09645
ARCHITECTURAL SPECIFICATIONS FOR INDOOR RESILIENT ATHLETIC SURFACING

Properties	Standards	PolyTurf Plus Pad & Pour Base Mat + Wear Coat +Top Coat
Base Mat Properties		
Width		59”
Length		82 lin. ft
Weight		1.2 lb/sq ft
Density	ASTM D297	.67 min (g/cm?)
Tensile Strength	ASTM D412	88 psi (Die Cast C)
Elongation	ASTM D412	48.5% (Die Cast C)
Compression	ASTM F36	@50 psi 87% @100 psi 91% @200 psi 91%
Tear Strength	ASTM D624	30 PPI Die C
Flexibility	ASTM F147	0-1
Compression Set B	ASTM D395	37% (25% deflection 158°F/22hrs)
Compression Set B	ASTM D395	26% (50% deflection 158°F/22hrs)
2mm Wear Coat Properties		
Shore Hardness	Shore A	80
Tensile Strength	ASTM D412	1600 psi
Elongation	ASTM D412	150%
Tear Strength	ASTM D624	122 PLI
Misc Techical		
Fire Classification	ASTM E648	Class 1
Environmental Certification	GreenGuard	GreenGuard Plus Certified
Sports Characteristics		
Overall Thickness		7+2 (9mm)
Shock Absorption	ASTM F2772	Class 2
Ball Bounce	ASTM F2772	>90%
Vertical Deformation	ASTM F2772	Passed
Surface Finish Effect	ASTM F2772	Passed
Installation with Multi-Poxy	92% Per ASTM F2170	

1. Color Layer Adhesive

B. Tarkolay – A high quality low permeance slip sheet vapor retarder designed to separate the installed system from the substrate below. Tarkolay as manufactured by FieldTurf USA, Inc. can be used below, on, or above grade substrates that experience elevated moisture conditions. Moisture tolerances shall not exceed 98% RH per ASTM F2170.

2. Physical properties of the indoor resilient athletic surfacing shall conform to the following minimums:

Width	…….	6’6” (2 m)
Length	…….	147’7”’ (45 m) approx.
Total Thickness	…….	1.3 mm
Dimensional Stability	PASSED	.01% (EN 1434)
Permeance	Excellent	<0.20 (ASTM E96

Game Line Paint:

As approved by the indoor resilient athletic surfacing manufacturer. Colors are to be selected from the manufacturer’s standard range.

PART 3 - EXECUTION

3.1 *EXAMINATION*

A. It is the responsibility of the general contractor/construction manager to ensure that project/site conditions are acceptable for the installation of the indoor resilient athletic flooring.
B. Verify that the area in which the indoor resilient athletic surfacing will be installed is dry and weather tight. Verify that permanent heat, light and ventilation is installed and operable.
C. Verify that all other work that could cause damage, dirt and dust or interrupt the normal pace of the indoor resilient athletic flooring installation is completed or suspended.
D. Verify that there is a stable room temperature of at least 65°F.
E. Verify that there are no foreign materials or objects on the subfloor and that the subfloor is clean and ready for installation.
F. Moisture content less than 98 % RH when tested per ASTM F2170. Follow Fieldturf Installation Recommendations.
G. Do not average the results of the tests. Report all field test results in writing to the General Contractor, Architect, and End User prior to installation.
H. Verify that the concrete subfloor surface pH level is within the 7 - 10 range.
I. Document the results indicating the slab is within manufacturer's tolerances for slab deviation.

3.2 *PREPARATION OF SURFACES*

A. Sand the entire surface of the concrete slab.
B. Sweep the concrete slab so as to remove all dirt and dust. If a sweeping compound is to be used it must be a sweeping compound that does not contain oil or other items that may inhibit the adhesive bond.
C. Slab must be dust free. In the event that dust impairs adhesive bond, priming the slab prior to application of adhesive may be necessary. Follow installation guidelines.

3.3 *INSTALLATION*

A. The installation area shall be closed to all traffic and activity for a period to be set by the indoor resilient athletic surfacing installer. The indoor resilient athletic surfacing installation shall not begin until the installer is familiar with the existing conditions.
B. All necessary precautions should be taken to minimize noise, smell, dust, the use of hazardous materials, and any other items that may inconvenience others.
C. Install the indoor resilient athletic surfacing in strict accordance with the indoor resilient athletic surfacing manufacturer's written instructions.
D. Paint game lines using approved game line paint primer and game line paint in strict accordance with the game line paint manufacturer's instructions.
E. Install appropriate threshold plates or transition strips where necessary.

F. Use only approved adhesive as recommended by the manufacturer.

3.4 *CLEANING*

A. Remove all unused materials, tools, and equipment and dispose of any debris properly. Clean the indoor resilient athletic surfacing in accordance with the manufacturer's instructions.

3.5 *PROTECTION*

If required, protect the indoor resilient athletic surfacing from damage using coverings approved by the manufacturer until acceptance of work by the customer or their authorized representative.

3.6 RELATED STANDARDS AND GUIDELINES

A. ASTM F2170 "Standard Test Method for Determining Relative Humidity In Concrete Floor Slabs Using In-Situ Probes"
B. ASTM F710 "Standard Practice for Preparing Concrete Floors to Receive Resilient Flooring"
C. ACI 302.2R-06 "Guideline for Concrete Slabs that Receive Moisture-Sensitive Flooring Materials"

END OF SECTION

SECTION 09645
ARCHITECTURAL SPECIFICATIONS FOR INDOOR RESILIENT ATHLETIC SURFACING

PART 1 – GENERAL

1.1 *SECTION INCLUDES*

A. Supply and installation of the indoor resilient multipurpose surfacing
B. Application of the game lines
C. References for the construction and preparation of concrete slabs to receive resilient flooring.

1.2 *SUBMITTALS*

A. Product Data:
Manufacturer's promotional brochures, specifications and installation instructions
B. Samples:
1. Submit for selection and approval three (3) sets of the indoor resilient multipurpose surfacing, manufacturer's brochures, samples or sample boards of all of the available colors, textures and styles.
2. Submit color samples of all the available game line paint colors for selection and approval.
C. Closeout Submittals:
1. Submit three (3) copies of the indoor resilient multipurpose surfacing and manufacturer's maintenance instructions.
2. Submit three (3) copies of the material and installation warranties as specified.

1.3 *QUALITY ASSURANCE*

A. Qualifications:
1. The indoor resilient multipurpose surfacing shall have been actively marketed for a minimum of ten (10) years.
2. The indoor resilient multipurpose surfacing shall be manufactured in an ISO 9001 certified plant.
4. The indoor resilient multipurpose surfacing supplier shall be an established firm, experienced in the field, and appointed as a distributor by the manufacturer of the indoor resilient multipurpose surfacing.
5. The installer of the indoor resilient multipurpose surfacing shall have a minimum of five (5) years of experience in the field installing indoor resilient multipurpose surfacing and have worked on at least five (5) projects of similar size, type and complexity.
B. Certifications:
1. Installer to submit the indoor resilient athletic surfacing manufacturer's certification attesting that they are an approved installer of the indoor resilient multipurpose surfacing.
2. The indoor resilient multipurpose surfacing manufacturer to submit official ISO 9001 certification for the facility in which the indoor resilient multipurpose surfacing is manufactured.

C. Testing:
Tests shall be relative for multi-purpose use with certificates from independent testing resources to be made available upon request. Test results shall be no more than 5 years old and performed according to ASTM standard testing procedures.

B. Certifications:
3. Installer to submit the indoor resilient athletic surfacing manufacturer's or distributor's certification attesting that they are an approved installer of the indoor resilient multipurpose surfacing.

C. Testing:
Tests shall be relative for multi-purpose use with certificates from independent testing resources to be made available upon request. Test results shall be no more than 5 years old and performed according to ASTM F2772 standard testing procedures for force reduction, ball bounce, vertical deformation, and surface finish effect.

1.4 *DELIVERY, STORAGE AND HANDLING*

A. Delivery:
Material shall not be delivered until all related work is in place and finished and/or proper storage facilities and conditions can be provided and guaranteed stable according to Fieldturf' recommendations.

B. Storage:
Store the material in a secure, clean and dry location. Maintain temperature between 55° and 85° Fahrenheit.

1.5 *PROJECT/SITE CONDITIONS*

A. It is the responsibility of the general contractor/construction manager to maintain project/site conditions acceptable for the installation of the indoor resilient multipurpose flooring.

B. The area in which the indoor resilient multipurpose surfacing will be installed shall be dry and weather tight. Permanent heat, light and ventilation shall be installed and operable.

C. All other trades shall have completed their work prior to the installation of the resilient athletic flooring. The general contractor or Construction Manager shall maintain a secure and clean working environment before, during and after the installation. Suspension of other trades' work may be authorized providing their work will not damage the new flooring.

D. Maintain a stable room temperature of at least 65°F for a minimum of one (1) week prior to, during, and thereafter installation.

E. An effective low-permeance vapor barrier is placed directly beneath the concrete subfloor. For "on" or "below grade" installations, it is recommended to provide a permanent vapor barrier resistant to long term hydrostatic pressure/moisture exposure. Protrusions should be sealed to prevent moisture migration into the slab. Moisture should not be allowed to enter the slab after the completed construction.

F. Concrete subfloor surface pH level within the 7 to 10 range dependent upon installation type.
G. Concrete subfloor should be no greater than 1/8" within a 10 ft diameter. This tolerance can be measured in accordance with ASTM E1155. A specified (F_F) of 50 and an (F_L) of 30 should reach this degree of floor flatness and floor level. There is no numerical correlation between F numbers and the deviation from the straight edge, however the above specified numbers should achieve a flat floor with minimal deviation in the slab. Reference ACI 117 and ACI 302.1R. The general contractor should provide a certificate of compliance with the above recommendations.
H. Concrete subfloor must be clean and free of all foreign materials or objects including, but not limited to, curing compounds and sealers.
I. Fill cracks, grooves, voids, depressions, and other minor imperfections with Ardex (or equal) cement-based patching/leveling compounds. Follow the manufacturer's directions. Moveable joints must be treated utilizing specific transitioning joint devices depending upon the architect's recommendations. Follow current ASTM F710 guidelines for the preparation of concrete slabs to receive resilient flooring.
J. Refer to ACI 302.2R "Guidelines for Concrete Slabs that Receive Moisture-Sensitive Flooring Materials" for concrete design and construction.
K. Concrete slab shall be fortified with continual steel reinforcement. Fiber reinforcement alone shall not be considered adequate fortification.

1.6 *WARRANTY*

A. Materials:
The indoor resilient athletic surfacing shall be covered by the manufacturer against product defects for 8 years. The manufacturer of the indoor resilient multipurpose surfacing must provide this warranty upon request.
B. Installation:
The installation of the indoor resilient multipurpose surfacing shall be covered against poor workmanship and faulty installation by a two (2) year written, limited warranty provided by the contractor performing/overseeing the installation.

1.7 *ADDITIONAL MATERIALS*

Furnish to the owner additional materials containing a total of at least 1% of each different color or design of the indoor resilient athletic surfacing used on the project.

1.8 *LEED™ CERTIFICATION*

The indoor resilient athletic surfacing should be able to help this facility to achieve points towards *LEED™* certification.

LEED categories positively affected by the indoor resilient athletic surfacing:

Product Type			PU with Recycled Base Layer
Building Reuse Maintain Interior Nonstructural Elements	**MR 1.2**	Renovation	1

Construction Waste Management	**MR 2**	Renovation	2
Recycled Content	**MR 4** **20% - 2 points**	New/Renovation	2
Regional Materials	**MR 5** **20% - 2 points**	New/Renovation	2
Materials and Resources Rapidly Renewable Materials	**MR 6**	New/Renovation	1
Indoor Environmental Air Quality Low VOC Adhesives/Sealants	**IEQ 4.1**	New/Renovation	1
Low-emitting Materials Paints and Coatings	**IEQ 4.2**	New/Renovation	1

PART 2 - PRODUCTS

2.1 *MANUFACTURERS*

The basis of the design for the indoor resilient multipurpose surfacing is Polyturf Plus Pad and Pour as provided by Fieldturf or equal. Product shall be manufactured by an ISO 9001 company.

2.2 *MATERIALS.*

A.) Flooring System:

Polyturf Plus 7+2 (9mm total thickness) consists of a recycled resilient sheet force reduction layer integrated with seamless, liquid applied, and self-leveling 2 mm polyurethane topcoat.

A durable protective color coat shall be applied to a thickness of approximately 7 mils. The finished product shall be a seamless surface heterogeneous resilient multipurpose synthetic flooring system. System shall comply with the following criteria. Colors to be selected from manufacturer's standard range.

SECTION 09645
ARCHITECTURAL SPECIFICATIONS FOR INDOOR RESILIENT ATHLETIC SURFACING

Properties	Standards	PolyTurf Plus Pad & Pour Base Mat + Wear Coat +Top Coat
Base Mat Properties		
Width		59”
Length		82 lin. ft
Weight		1.2 lb/sq ft
Density	ASTM D297	.67 min (g/cm?)
Tensile Strength	ASTM D412	88 psi (Die Cast C)
Elongation	ASTM D412	48.5% (Die Cast C)
Compression	ASTM F36	@50 psi 87% @100 psi 91% @200 psi 91%
Tear Strength	ASTM D624	30 PPI Die C
Flexibility	ASTM F147	0-1
Compression Set B	ASTM D395	37% (25% deflection 158°F/22hrs)
Compression Set B	ASTM D395	26% (50% deflection 158°F/22hrs)
2mm Wear Coat Properties		
Shore Hardness	Shore A	80
Tensile Strength	ASTM D412	1600 psi
Elongation	ASTM D412	150%
Tear Strength	ASTM D624	122 PLI
Misc Techical		
Fire Classification	ASTM E648	Class 1
Environmental Certification	GreenGuard	GreenGuard Plus Certified
Sports Characteristics		
Overall Thickness		7+2 (9mm)
Shock Absorption	ASTM F2772	Class 2
Ball Bounce	ASTM F2772	>90%
Vertical Deformation	ASTM F2772	Passed
Surface Finish Effect	ASTM F2772	Passed
Installation with Multi-Poxy	92% Per ASTM F2170	

Game Line Paint:

As approved by the indoor resilient athletic surfacing manufacturer. Colors are to be selected from the manufacturer’s standard range.

PART 3 - EXECUTION

3.1 *EXAMINATION*

A. It is the responsibility of the general contractor/construction manager to ensure that project/site conditions are acceptable for the installation of the indoor resilient athletic flooring.

B. Verify that the area in which the indoor resilient athletic surfacing will be installed is dry and weather tight. Verify that permanent heat, light and ventilation is installed and operable.

C. Verify that all other work that could cause damage, dirt and dust or interrupt the normal pace of the indoor resilient athletic flooring installation is completed or suspended.

D. Verify that there is a stable room temperature of at least 65°F.

E. Verify that there are no foreign materials or objects on the subfloor and that the subfloor is clean and ready for installation.

F. Moisture content less than 92 % RH when tested per ASTM F2170. Follow Fieldturf Installation Recommendations.
G. If both tests are performed, use the highest value. Do not average the results of the tests. Report all field test results in writing to the General Contractor, Architect, and End User prior to installation.
H. Verify that the concrete subfloor surface pH level is within the 7 - 10 range.
I. Document the results indicating the slab is within manufacturer's tolerances for slab deviation.

3.2 *PREPARATION OF SURFACES*

A. Sand the entire surface of the concrete slab.
B. Sweep the concrete slab so as to remove all dirt and dust. If a sweeping compound is to be used it must be a sweeping compound that does not contain oil or other items that may inhibit the adhesive bond.
C. Slab must be dust free. In the event that dust impairs adhesive bond, priming the slab prior to application of adhesive may be necessary. Follow installation guidelines.

3.3 *INSTALLATION*

A. The installation area shall be closed to all traffic and activity for a period to be set by the indoor resilient athletic surfacing installer. The indoor resilient athletic surfacing installation shall not begin until the installer is familiar with the existing conditions.
B. All necessary precautions should be taken to minimize noise, smell, dust, the use of hazardous materials, and any other items that may inconvenience others.
C. Install the indoor resilient athletic surfacing in strict accordance with the indoor resilient athletic surfacing manufacturer's written instructions.
D. Paint game lines using approved game line paint primer and game line paint in strict accordance with the game line paint manufacturer's instructions.
E. Install appropriate threshold plates or transition strips where necessary.
F. Use only approved adhesive as recommended by the manufacturer.

3.4 *CLEANING*

A. Remove all unused materials, tools, and equipment and dispose of any debris properly. Clean the indoor resilient athletic surfacing in accordance with the manufacturer's instructions.

3.5 *PROTECTION*

If required, protect the indoor resilient athletic surfacing from damage using coverings approved by the manufacturer until acceptance of work by the customer or their authorized representative.

3.6 RELATED STANDARDS AND GUIDELINES

A. ASTM F2170 "Standard Test Method for Determining Relative Humidity In Concrete Floor Slabs Using In-Situ Probes"
B. ASTM F710 "Standard Practice for Preparing Concrete Floors to Receive Resilient Flooring"

C. ACI 302.2R-06 "Guideline for Concrete Slabs that Receive Moisture-Sensitive Flooring Materials"

END OF SECTION

PolyTurf Plus
7+2 Pad and Pour

PolyTurf Plus Pad and Pour 7+2 is a seamless polyurethane sports surface that is designed for durability. This field-constructed system includes a 7 mm recycled rubber base mat for comfort and shock absoprtion.

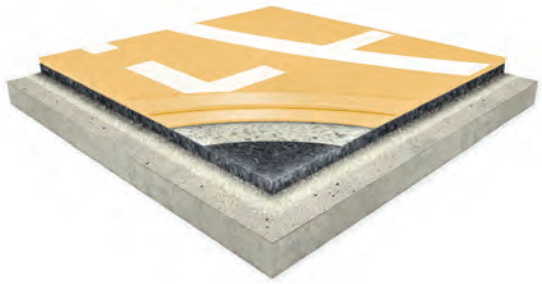

Warranty Protection

- 8-year comprehensive product coverage. Refer to sample warranty document for complete coverage details.

Environmental Facts and LEED

- For environmental facts and LEED credits, visit: tarkettsportsindoor.com/en/specs-and-data/environmental-fact-sheets and tarkettsportsindoor.com/en/specs-and-data/leed-information.

Maintenance Instructions

- For maintenance instructions, please refer to the PolyTurf Plus Pad and Pour maintenance guide at the following link: tarkettsportsindoor.com/en/specs-and-data/care-and-maintenance.

Installation Methods

- Multi-Poxy Adhesive: installation using Tarkett's solvent-free Multi-Poxy adhesive, which allows moisture tolerance of up to 92% relative humidity per ASTM F2170.
- Beybond 50 Adhesive: installation using Beybond 50 two-part polyurethane adhesive, which allows moisture tolerance of up to 83% relative humidity per ASTM F2170.
- Tarkolay with Multi-Poxy: installation over Tarkolay moisture barrier using Tarkett's solvent-free Multi-Poxy adhesive, which allows moisture tolerance of up to 98% relative humidity per ASTM F2170.

Sports Characteristics

Property	Standard	Value
Surface Finish Effect	ASTM F2772-11	Passed
Force Reduction	ASTM F2772-11	Class 2
Vertical Deformation	ASTM F2772-11	Passed
Ball Rebound	ASTM F2772-11	Passed

Technical Characteristics

Property	Standard	Value
Reaction to Fire	ASTM E648	Class 1 (Radiant Panel)
Shore Hardness	—	80 (Shore A)
Tensile Strength	ASTM D412	1600 psi
Elongation	ASTM D412	150%
Tear Strength	ASTM D624	122 PLI
Thickness	—	9.0 mm (0.354")
Roll Width (Base Mat)	—	1.5 m (59")
Roll Length (Base Mat)	—	25 m (82')
Weight (Base Mat)	—	4.5 kg/m^2 (0.93 lbs./sq. ft.)
Density (Base Mat)	ASTM D297	0.67 min g/cm^3
Tensile Strength (Base Mat)	ASTM D412	88 psi (die cast C)
Elongation (Base Mat)	ASTM D412	48.5% (die cast C)
Compression (Base Mat)	ASTM F36	87% (50 psi), 91% (100 psi), 91% (200 psi)
Flexibility (Base Mat)	ASTM F147	0-1
Compression Set B (Base Mat)	ASTM D395	37% (25% deflection, 158° F/22 hrs.)
Compression Set B (Base Mat)	ASTM D395	37% (25% deflection, 158° F/22 hrs.)

Compatible substrates include: properly constructed and prepared concrete, wood, asphalt, and cementitious underlayments. Refer to current installation guidelines, ASTM F710, ACI 302.2R, and other industry standard recommendations for more information. Tarkett Sports reserves the right to modify these specifications without affecting their compliance with standards. Some results may vary in relation to certain flexibilities found within specified testing procedures and manufacturing tolerances.

888.364.6541
tarkettsportsindoor.com

Available Colors for PolyTurf Plus Pad and Pour 7+2

Sky Blue	Pool Blue	Blue Jay	Deep Blue	Coastal Blue
Teal Blue	Midnight Blue	Aqua	Red	Red Rub
Grey Cloud	Grey Smoke	Storm Grey	Black	Orange
Tropical Green	Garden Green	Forest Green	Violet	Purple
Sand	Tan	Smoothie	Desert	Gold

The colors presented here are representations only.
For information on obtaining individual color swatches, contact a local Tarkett Sports representative or call 888-364-6541.

FieldTurf USA Inc

TARKOLAY
Moisture Barrier

Tarkolay is a resilient slip sheet membrane designed to act as a moisture barrier for flooring installations. It does so by separating the vapor pressure of the concrete from the flooring above.

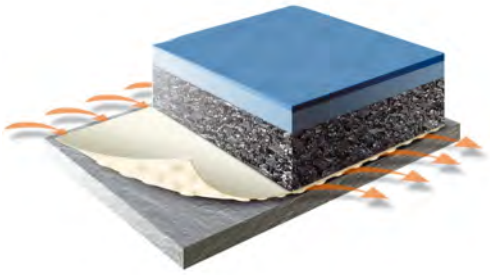

floor score by SCScertified

Installation Options

- PolyTurf Plus Pad and Pour Flooring: Tarkolay can be installed as an underlayment for PolyTurf Plus Pad and Pour systems using Tarkett Sports' Multi-Poxy adhesive.
- Omnisports Multi-Use Sports Flooring: Tarkolay can be installed as an underlayment for Omnisports flooring using Tarkett Sports' Multi-Poxy adhesive.
- Dropzone and Dropzone Speckle Weight Room Flooring: Tarkolay can be installed as an underlayment for Dropzone and Dropzone Speckle flooring using Tarkett Sports' Multi-Poxy adhesive.

Installation Method

- Tarkolay is installed in a direction parallel to the sheet flooring surface and offset.

Heating System Compatibility

- Tarkolay is compatible with in-slab heating systems (conditions required).

Performance Characteristics

Property	Standard	Value
Moisture Tolerance	ASTM F2170	96% RH

Technical Characteristics

Property	Standard	Value
Material Type	—	Resilient Sheet Vinyl
Color	—	White
Surface Texture	—	Smooth
Backing Texture	—	Dimpled
Roll Width	EN 426/EN 427	2 m (6.5')
Roll Length	EN 426/EN 427	45 m (147' 7")
Thickness	EN 428/EN 429	1.3 mm (0.05")
Weight	EN 430	1.16 kg/m² (0.26 lbs./sq. ft.)
Permeance	ASTM E96	< 0.20 Perm
Dimensional Stability	EN 434	0.01%

Compatible substrates include: properly constructed and prepared concrete, wood, asphalt, and cementitious underlayments. Refer to current installation guidelines, ASTM F710, ACI 302.2R, and other industry standard recommendations for more information. Tarkett Sports reserves the right to modify these specifications without affecting their compliance with standards. Some results may vary in relation to certain flexibilities found within specified testing procedures and manufacturing tolerances.

888.364.6541
tarkettsportsindoor.com

Tarkett Sports

EIGHT-YEAR LIMITED MANUFACTURER'S WARRANTY

WARRANTOR: FieldTurf USA, Inc.
175 N Industrial Blvd N.E.
Calhoun, Georgia
30701

OWNER: **("Insert Owner's Name and Address")**

PRODUCT: **PolyTurf Plus Pad & Pour**

WARRANTY: FieldTurf warrants to Owner, subject to the terms and conditions contained in this Warranty, that the above-described Surface is free from defects in materials and workmanship under normal use and service, so long as the Surface was installed in accordance with the drawings, plans and specifications for the Surface.

WARRANTY PERIOD: This Warranty shall be in force for a period of 96 months from the Effective Date as defined below.

RESPONSE FOR WARRANTY REPAIRS: FieldTurf agrees to perform all repairs required by this Warranty within a reasonable time upon receiving proper written notice from Owner as provided below and after FieldTurf carries out all inspections and tests, which it may deem necessary or advisable. Any required repair work shall be initiated by FieldTurf within a reasonable time from FieldTurf's receipt of Owner's written notice requesting such repairs.

LIMITATIONS AND EXCLUSIONS: This Warranty does not apply to any defect, failure, damage, or undue wear in or to the Surface caused by or connected with: (a) the installation process of the Surface on the Owner's base; (b) improper or insufficient design or engineering, or improper or insufficient project drawings, plans or specifications; (c) an inadequate or defective pre-existing base or surface; (d) the inherent characteristics of the earth or surface upon which the Surface is installed; (e) misuse, abuse, or deliberate acts of vandalism; (f) accident, negligence, or acts of God; (g) static or dynamic loads exceeding FieldTurf''s recommendations; (h) use of improper cleaning methods; or (i) Owner's failure to care for and maintain the Surface in accordance with FieldTurf's written instructions. FieldTurf does not warrant or guarantee the accuracy or sufficiency of any drawings, plans, or specifications not prepared by FieldTurf and which are used in connection with installing the Surface. This Warranty shall be of no force and effect if FieldTurf is not paid in full for the Surface and FieldTurf's obligations under this Warranty are expressly contingent upon FieldTurf being paid in full for the Surface.

This Warranty shall not apply to the Surface, or any part thereof, which has been repaired or altered without FieldTurf's prior written consent. No allowance or credit will be granted for any repairs or alterations to the Surface made by Owner except as authorized by this Warranty.

THIS WARRANTY IS EXPRESSLY IN LIEU OF ALL OTHER WARRANTIES, EXPRESSED, IMPLIED OR ARISING BY OPERATION OF LAW, INCLUDING (BUT NOT LIMITED TO) ANY IMPLIED WARRANTIES OF MERCHANTABILITY OR FITNESS FOR A PARTICULAR PURPOSE AND OF ALL OTHER OBLIGATIONS OR LIABILITIES ON FIELDTURF'S PART. FIELDTURF SHALL NOT BE LIABLE FOR ANY DAMAGES UNDER TORT, CONTRACT OR STRICT LIABILITY AND/ OR INCIDENTAL, CONSEQUENTIAL, SPECIAL OR INDIRECT DAMAGES UNDER THIS WARRANTY.

SAMPLE

Tarkett Sports

FIELDTURF'S SOLE OBLIGATION UNDER THIS WARRANTY IS TO REPAIR OR REPLACE AT ITS SOLE DISCRETION ALL OR ANY PORTION OF THE SURFACE WHICH MAY BE DETERMINED TO BE DEFECTIVE. FIELDTURF'S LIABILITY FOR ANY SUCH REPAIR OR REPALCEMENT SHALL IN NO EVENT EXCEED THE AMOUNT OF THE PURCHASE PRICE ATTRIBUTABLE TO THE DEFECTIVE PORTION OF THE SURFACE WHICH IS REPAIRED OR REPLACED.

MAINTENANCE INSTRUCTIONS: FieldTurf has supplied Owner with a copy (attached) of the Maintenance Manual containing written instructions for the care and maintenance of the Surface. Owner acknowledges receipt of said Maintenance Manual and agrees to comply with and carry out the instructions contained in it as a condition of this Warranty. The terms of the Maintenance Manual are incorporated in this Warranty by reference.

CLAIMS: All claims by Owner under this Warranty must be made in writing to the following address within thirty calendar days after Owner learns of any defect giving rise to the claim: FieldTurf USA, Inc., Indoor Division, 175 N Industrial Blvd N.E., Calhoun, Georgia 30269.

INSPECTIONS AND TESTS: FieldTurf shall be allowed to inspect the Surface during reasonable business hours regarding any claim, which Owner makes under this Warranty; to be present at and to analyze the results of all tests conducted by Owner or others; and to conduct such tests as FieldTurf in its discretion may deem advisable. Owner shall promptly furnish FieldTurf with a copy of all written reports of any tests performed by Owner or on Owner's behalf. FieldTurf shall not be responsible for any costs or expenses incurred by Owner or others with respect to such tests, except that FieldTurf shall pay for the costs of all tests and analyses conducted or directed by FieldTurf representatives.

EFFECTIVE DATE: The Effective Date of this Warranty is the ____ day of _____, 2014.

FieldTurf USA, Inc.

By: _____

Signature: _____

Title: _____

Date: _____

Enclosed: Instructions for Care and Maintenance of your Product

SAMPLE

Tarkett Sports

MANUFACTURER'S LIMITED WARRANTY

WARRANTOR: FieldTurf, USA Inc.
175 N Industrial Boulevard NE
Calhoun, Georgia 30701
USA

OWNER: **("Insert Owner's Name and Address")**

SURFACE: **OMNISPORTS**
("Surface")

WARRANTY DESCRIPTION AND WARRANTY PERIODS:

LIMITED PRODUCT DEFECT WARRANTY: FieldTurf USA, Inc. ("FieldTurf") warrants to Owner, subject to the terms and conditions contained in this Warranty, that the above-described Surface is free from defects in materials and workmanship under normal use and service, as long as the Surface was installed in accordance with the drawings, plans and specifications for the Surface. The Limited Product Defect Warranty shall be in force for a period of ten (10) years from the Effective Date as defined below.

LIMITED WEAR WARRANTY: FieldTurf warrants to Owner, subject to the terms and conditions contained in this Warranty, that there will be no wear-through of the Surface's wear layer under normal use and service, as long as the Surface was installed in accordance with the drawings, plans and specifications for the Surface. For purposes of the Limited Wear Warranty, "wear-through" refers to the top layer of the Surface and means a complete loss of the wear-layer so that the printed layer (pattern or color) is materially changed or affected. The Limited Wear Warranty only shall be in force for a period of fifteen (15) years from the Effective Date.

RESPONSE FOR WARRANTY REPAIRS: FieldTurf agrees to perform all repairs required by this Warranty within a reasonable time upon receiving proper written notice from Owner as provided below and after FieldTurf carries out all inspections and tests, which it may deem necessary or advisable. Any required repair work shall be initiated by FieldTurf within a reasonable time after FieldTurf's receipt of Owner's written notice requesting such repairs. FieldTurf's sole liability under this Warranty shall be limited to either repair or replacement of the affected area of the Surface, at its sole discretion, and FieldTurf shall have no other obligations or liabilities with respect to defects of the Surface.

LIMITATIONS AND EXCLUSIONS: This Warranty does not apply to any defect, failure, damage, and/or accelerated, undue or excessive wear in or to the Surface caused by or connected with: (a) the installation process of the Surface on the Owner's base; (b) improper or insufficient design or engineering, or improper or insufficient project drawings, plans or specifications; (c) an inadequate or defective pre-existing base or surface; (d) the inherent characteristics of the earth or surface upon which the Surface is installed; (e) misuse, abuse, or deliberate acts of vandalism; (f) accident, negligence, or acts of God; (g) static or dynamic loads exceeding FieldTurf''s recommendations; (h) use of improper cleaning methods; (i) the introduction or accumulation of moisture around or under the Surface; (j) Owner's failure to care for and maintain the Surface in accordance with FieldTurf's Maintenance Manual and other written instructions; or (k) use which is not generally accepted as a typical use of the Surface. FieldTurf does not warrant or guarantee the accuracy or sufficiency of any drawings, plans, or specifications not prepared by FieldTurf and which are used in connection with installing the Surface. This Warranty shall be of no force and effect if FieldTurf is not paid in full for the Surface and FieldTurf's obligations under this Warranty are expressly contingent upon FieldTurf being paid in full for the Surface.

For more information please contact the Indoor division of FieldTurf at (888) 364-6541.

SAMPLE

Tarkett Sports

This Warranty shall not apply to the Surface, or any part thereof, which has been repaired or altered without FieldTurf's prior written consent. No allowance or credit will be granted for any repairs or alterations to the Surface made by Owner except as authorized by this Warranty.

THIS WARRANTY IS EXPRESSLY IN LIEU OF ALL OTHER WARRANTIES, EXPRESSED, IMPLIED OR ARISING BY OPERATION OF LAW, INCLUDING (BUT NOT LIMITED TO) ANY IMPLIED WARRANTIES OF MERCHANTABILITY OR FITNESS FOR A PARTICULAR PURPOSE AND OF ALL OTHER OBLIGATIONS OR LIABILITIES ON FIELDTURF'S PART. FIELDTURF USA, INC. SHALL NOT BE LIABLE FOR ANY DAMAGES UNDER TORT, CONTRACT OR STRICT LIABILITY AND/ OR INCIDENTAL, CONSEQUENTIAL, SPECIAL OR INDIRECT DAMAGES UNDER THIS WARRANTY.

FIELDTURF'S SOLE OBLIGATION UNDER THIS WARRANTY IS TO REPAIR OR REPLACE AT ITS SOLE DISCRETION ALL OR ANY PORTION OF THE SURFACE WHICH MAY BE DETERMINED TO BE DEFECTIVE. FIELDTURF'S LIABILITY FOR ANY SUCH REPAIR OR REPALCEMENT SHALL IN NO EVENT EXCEED THE AMOUNT OF THE PURCHASE PRICE ATTRIBUTABLE TO THE DEFECTIVE PORTION OF THE SURFACE WHICH IS REPAIRED OR REPLACED.

MAINTENANCE INSTRUCTIONS: FieldTurf has made available or supplied Owner with a copy of the Maintenance Manual containing written instructions for the care and maintenance of the Surface. Owner acknowledges receipt of said Maintenance Manual and agrees to comply with and carry out the instructions contained in it as a condition of this Warranty. The terms of the Maintenance Manual are incorporated in this Warranty by reference. If a Maintenance Manual is not received by Owner at the time of issuance of this warranty, it is the owner's obligation to request and maintain record of receipt.

CLAIMS: All claims by Owner under this Warranty must be made in writing to the following address within thirty calendar days after Owner learns of any defect giving rise to the claim: FieldTurf USA, Inc. Indoor Division, 175 N Industrial Blvd. Calhoun, Georgia, 30701.

INSPECTIONS AND TESTS: FieldTurf shall be allowed to inspect the Surface during reasonable business hours regarding any claim, which Owner makes under this Warranty; to be present at and to analyze the results of all tests conducted by Owner or others; and to conduct such tests as FieldTurf in its discretion may deem advisable. Owner shall promptly furnish FieldTurf with a copy of all written reports of any tests performed by Owner or on Owner's behalf. FieldTurf shall not be responsible for any costs or expenses incurred by Owner or others with respect to such tests, except that FieldTurf shall pay for the costs of all tests and analyses conducted or directed by FieldTurf representatives.

GOVERNING LAW AND CONSENT: This Warranty shall be governed by and interpreted in accordance with the law of the State of Georgia.

EFFECTIVE DATE: The Effective Date of this Warranty is the _____day of _____, 2014.

OWNER'S NAME	**FieldTurf USA, Inc.**
By:_____	By:_____
Title:_____	Title:_____
Date:_____	Date:_____

For more information please contact the Indoor division of FieldTurf at (888) 364-6541.

SAMPLE

Plexicushion Tennis Court Surface Products

Open Plexipave Color Card

"As the USC men's tennis coach for the past 23 years, I was always looking for a slow, long-lasting court surface. Plexipave was the answer! They also have brilliant colors that stay sharp."

Dick Leach *Retired Men's Tennis Coach University of Southern California*

"I think it's great for the body. I think it's good for anyone's body. It's a lot easier on the joints, which is always good, especially when you're 6-2.""

Maria Sharapova
Professional Tennis Player From the New York Times, article "Australian Open Evens the Playing Surfaces" published Jan 13, 2008

A Grand Slam Surface - The Official Surface Supplier of the Australian Open

The **Plexicushion** System combines the consistent bounce, sure footing, and outstanding durability of Plexipave with the innovative shock-absorbing properties of EPDM Rubber cushioning. The result is a sure-footed surface that dynamically responds to body impact and reduces fatigue on player's legs ankles and feet. The multi-layered resiliency lengthens the orthopedic life of players of all ages, from juniors who are just starting to play competitively, to seniors who are enjoying the game in their golden years.

- Increases Health and Longevity for Players of All Ages
- Adjustable Level of Cushioning
- Leading UV Formulation Protects Pigmentation Against Color Fading
- Can be Customized to All ITF Pace Ratings

The Plexicushion substrate, a special blend of latex, rubber and plastic particles, forms a resilient layer that absorbs body shock and reduces muscle fatigue. The 100% acrylic Plexipave Surface provides consistent and uniform bounce, long lasting color, and allows speed of play specification.

Plexipave Sport Surfacing Systems use recycled and post-industrial components in each of the formulations. This manufacturing choice minimizes the exploitation of petroleum and wood resources. The Plexicushion Prestige System (liquid) contains 16.5% of post-industrial or recycled products.

Plexicushion - *Prestige* -

[Back to top]

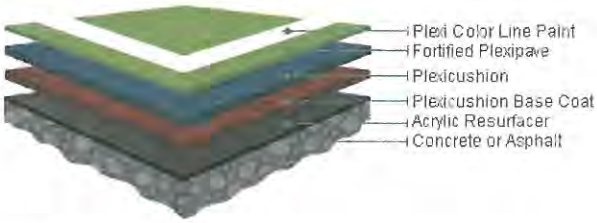

Examples

Prestige -
PLEXICUSHION PRESTIGE - ***SURFACE OF THE AUSTRALIAN OPEN***

- Our Grand Slam Tennis surface! - Plexipave is the Official Surface Supplier for this prestigious event.
- The original and still undisputed champion of cushioned tennis surfacing systems.
- The sub-surfacing system is comprised of SBR and EPDM rubber granules, compressed plastic particles and special mineral fibers bound by special water based polymers.

Plexicushion - *Competition* [Back to top]

Competition

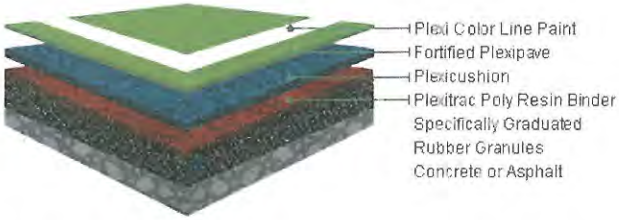

Examples

- New cushioned surface system combines the force reduction of the successful Plexitrac® System with the consistency of Plexicushion.
- Thicker layer of cushioning contains specifically-gradated rubber granules with our proven polyresin binder technology.
- The ideal seamless surface for indoor and warm-weather climates.

Plexicushion - *2000* [Back to top]

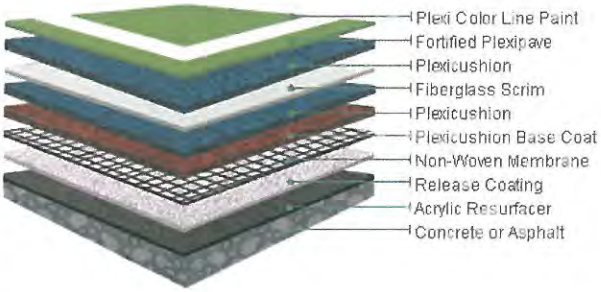

Examples

2000

- The first cushioned acrylic tennis court system specifically designed for application to slightly cracked or deteriorated concrete or asphalt bases.
- The unique slip-sheet "release coating" allows for a perfect and stable finished surface that is unaffected by base shifting.

Plexicushion - *Tournament* [Back to top]

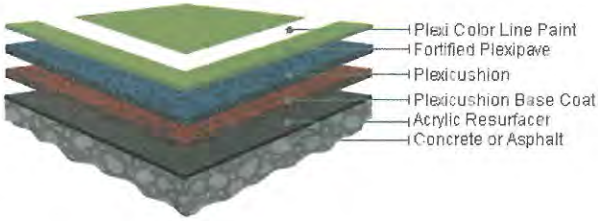

Examples

Tournament

Identical design to the industry-leading Prestige system, affordably constructed by removing one layer of Base Coat.

© 2014

California Products, Inc., All rights reserved | Site Map

BSS POLY-4000
Product Specifications

PART 1 – GENERAL

1.1 SUMMARY

A. Product Name: BSS Poly-4000.

B. Product Description: Pour-in-place, all-weather synthetic track surface consisting of polymer resin binders and rubber granules and multiple sprays of polymer resin coating.

C. Scope of Work: Furnish all required labor, materials and equipment to successfully install the specified all-weather synthetic track surface including striping and markings to a base properly prepared by others.

1.2 RELATED WORK

A. Earthwork
B. Drainage
C. Asphaltic Concrete Paving
D. Cast-in-Place Concrete
E. Synthetic Turf

1.3 REFERENCE STANDARDS

A. The work shall conform to the standards for track construction as prescribed or approved by the appropriate governing body; NFHS, NCAA, or IAAF.
   1. NFSHSA *Track and Field Rules.*
   2. ASBA *Running Tracks Construction and Maintenance Manual.*

1.4 SUBMITTALS

A. Product Data
B. Striping Diagram
C. Operation and Maintenance Manual
D. Warranty

1.5 QUALITY ASSURANCE

A. Synthetic surfacing contractor (SSC) shall be licensed and bonded and possess a valid contractor's license in the state where Work is performed.

B. SSC shall have a minimum of 5 years experience installing the specified all-weather track surface under the same corporate name as current operations.

1.6 PROJECT CONDITIONS

A. SSC, General Contractor (GC) and/or Owner, shall conduct a pre-construction meeting to review project conditions prior to dispatch of the SSC's installation team.

B. Synthetic surface base asphalt/concrete.
   1. The base asphalt and/or concrete shall meet the standards set by the Architect/Engineer and described in the product specifications.
   2. Allow minimum of 14 days cure on new asphalt, 28 days cure on new concrete prior to application of specified synthetic track surface.
   3. When surfacing on new asphalt, the asphalt contractor shall provide a flood test of the asphalt base.
   4. Repair work required on the base shall be approved by the Architect/Engineer.
   5. GC and/or Owner shall be responsible to protect the base from activities and traffic that may damage the base or leave dirt, oil or other foreign material on the base prior to application of the synthetic track surface.

C. Weather
   1. Apply the synthetic track surface only during favorable weather conditions.
   2. No application of the synthetic track surface shall be conducted during rainfall, when rain is imminent, when freezing temperatures are forecasted or exist, or when gusting winds are occurring.
   3. Work is to progress only when the SSC can guarantee successful cure of the materials.

D. During surface installation and striping, all irrigation systems shall be shut-off or controlled so that no water falls on the track or event areas.

E. During set-up, installation and striping, the GC and/or Owner shall be responsible to have the entire track and other pertinent areas closed and secured of all activities 24 hours per day until completion of the project.

1.7 WARRANTY

A. Manufacturer's and Installer's Warranty
   1. The warranty on the all-weather synthetic track surface shall endure for one (1) year from completion of installation.
   2. The warranty is to be provided directly by the SSC to the Owner.
   3. The warranty shall cover defects in materials and workmanship not deemed as ordinary wear on a running track.

.

B. Warranty Bond not required.

PART 2 – PRODUCTS

2.1 MANUFACTURERS

A. Beynon Sports, Inc., 19600 SW 129th Ave., Tualatin, OR 97092,
   Tel: 503-691-2484, Fax: 503-692-0491, www.beynonsports.com

2.2 MATERIALS

A. Rubber
   1. Poly-4000 base rubber shall be SBR granules with a 1.0-4.0mm gradation.
   2. SBR color shall be black.
   3. Poly-4000 wearing course rubber shall be EPDM with a 1.0-3.0mm gradation.
   4. EPDM color shall be red.

B. Binder
   1. Poly-4000 primer shall be a polymer resin compatible with base course materials.
   2. Poly-4000 binder shall be polymer resin containing a minimum of 50% solids.
   3. Poly-4000 coating shall be polymer resin highly pigmented. Color shall be red.

C. Marking and Line Paint
   1. The paint shall be formulated to be compatible with synthetic track surface materials.
   2. Colors shall be as prescribed or approved by the appropriate governing body; NFHS, NCAA, or IAAF.

PART 3 – EXECUTION

3.1 EXAMINATION

A. SSC shall examine project conditions to ensure successful installation of the synthetic track surface. Any deficiencies shall be reported to the GC and/or Owner for corrective action.

3.2 PREPARATION

B. SSC to protect adjacent areas from contamination of synthetic track surfacing materials due to installation procedures.

C. SSC shall prepare the base surface using a power blower to remove surface dirt. Cleaning necessary to remove embedded dirt, oil, or other foreign material shall be the responsibility of the GC and/or Owner.

3.3 INSTALLATION

A. General
   1. The Poly-4000 shall be installed using the “rake and spray” method. “Batching” of rubber and binder, “wet spraying” binder and rubber, or other methods used to reduce the number of layers applied are not allowed.
   2. Poly-4000 shall be installed in a minimum of nine layers.
   3. Materials shall be applied in even layers with equipment specifically designed for the installation of resilient surfacing. Thorough curing between each layer is required before successive coats are applied.
   4. Poly-4000 shall consist of a minimum quantity of 8.0 pounds per square yard of SBR granules, a minimum of 4.4 pounds per square yard of EPDM rubber granules, not less than 4.5 pounds per square yard of polymer resin primer/binder and a minimum of 1.0 pounds per square yard of polymer resin coating.
   5. Completed Poly-4000 shall have a minimum depth of 13mm.

B. Striping
   1. Striping Contractor shall verify with Owner's representative the exact locations, size, shape, and color of the lines and markings before proceeding with striping and markings.
   2. Engineer the layout of lane lines, starting lines, and markings as prescribed or approved by the Owner's representative, Architect/Engineer and the appropriate governing body; NFHS, NCAA, or IAAF.
   3. All lines and markings shall be spray applied by experienced personnel utilizing equipment manufactured for line striping. Striping lines and markings shall have true sharp edges.

3.4 CLEANING

A. Upon completion of work remove all containers, surplus materials, and installation debris.

B. Leave area of work in clean orderly condition ready for use by Owner.

Product Specifications\Poly-4000 13mm.doc

BSS POLY-4000 TOP-COAT
Product Specifications

PART 1 – GENERAL

1.1 SUMMARY

A. Product Name: BSS Poly-4000 Top-Coat.

B. Product Description: Pour-in-place, all-weather synthetic track re-surface consisting of polymer resin binders and rubber granules.

C. Scope of Work: Furnish all required labor, materials and equipment to successfully install the specified all-weather synthetic track surface including striping and markings.

1.2 RELATED WORK

A. Earthwork
B. Drainage
C. Asphaltic Concrete Paving
D. Cast-in-Place Concrete
E. Synthetic Turf

1.3 REFERENCE STANDARDS

A. The work shall conform to the standards for track construction as prescribed or approved by the appropriate governing body; NFHS, NCAA, or IAAF.
   1. NFSHSA *Track and Field Rules.*
   2. ASBA *Running Tracks Construction and Maintenance Manual.*

1.4 SUBMITTALS

A. Product Data
B. Striping Diagram
C. Operation and Maintenance Manual
D. Warranty

1.5 QUALITY ASSURANCE

A. Synthetic surfacing contractor (SSC) shall be licensed and bonded and possess a valid contractor's license in the state where Work is performed.

B. SSC shall have a minimum of 5 years experience installing the specified all-weather track surface under the same corporate name as current operations.

1.6 PROJECT CONDITIONS

A. SSC, General Contractor (GC) and/or Owner, shall conduct a pre-construction meeting to review project conditions prior to dispatch of the SSC's installation team.

B. Synthetic surface base.
   1. The base surface shall meet the standards set by the Architect/Engineer and described in the product specifications.
   2. Allow minimum of 14 days cure on new asphalt, 28 days cure on new concrete prior to application of specified synthetic track surface.
   3. Repair work required on the base shall be approved by the Architect/Engineer.
   4. GC and/or Owner shall be responsible to protect the base from activities and traffic that may damage the base or leave dirt, oil or other foreign material on the base prior to application of the synthetic track surface.

C. Weather
   1. Apply the synthetic track surface only during favorable weather conditions.
   2. No application of the synthetic track surface shall be conducted during rainfall, when rain is imminent, when freezing temperatures are forecasted or exist, or when gusting winds are occurring.
   3. Work is to progress only when the SSC can guarantee successful cure of the materials.

D. During surface installation and striping, all irrigation systems shall be shut-off or controlled so that no water falls on the track or event areas.

E. During set-up, installation and striping, the GC and/or Owner shall be responsible to have the entire track and other pertinent areas closed and secured of all activities 24 hours per day until completion of the project.

1.7 WARRANTY

A. Manufacturer's and Installer's Warranty
   1. The warranty on the all-weather synthetic track surface shall endure for two (2) years from completion of installation.
   2. The warranty is to be provided directly by the SSC to the Owner.
   3. The warranty shall cover defects in materials and workmanship not deemed as ordinary wear on a running track.

.

B. Warranty Bond not required.

PART 2 – PRODUCTS

2.1 MANUFACTURERS

A. beynonsports, Inc., 19600 SW 129th Ave., Tualatin, OR 97092,
   Tel: 503-691-2484, Fax: 503-692-0491, www.beynonsports.com

2.2 MATERIALS

A. Rubber
   1. Poly-4000 Top-Coat rubber shall be EPDM rubber granules with a 1.0-3.0mm gradation.
   2. EPDM color shall be red.

B. Binder
   1. Poly-4000 binder shall be polymer resin containing a minimum of 50% solids.
   2. Poly-4000 coating shall be polymer resin highly pigmented. Color shall be red.

C. Marking and Line Paint
   1. The paint shall be formulated to be compatible with synthetic track surface materials.
   2. Colors shall be as prescribed or approved by the appropriate governing body; NFHS, NCAA, or IAAF.

PART 3 – EXECUTION

3.1 EXAMINATION

A. SSC shall examine project conditions to ensure successful installation of the synthetic track surface. Any deficiencies shall be reported to the GC and/or Owner for corrective action.

3.2 PREPARATION

B. SSC to protect adjacent areas from contamination of synthetic track surfacing materials due to installation procedures.

C. SSC shall prepare the base surface using a power blower to remove surface dirt. Cleaning necessary to remove embedded dirt, oil, or other foreign material shall be the responsibility of the GC and/or Owner.

3.3 INSTALLATION

A. General
   1. The Poly-4000 Top-Coat shall be installed using the “rake and spray” method. “Batching” of rubber and binder, “wet spraying” binder and rubber, or other methods used to reduce the number of layers applied are not allowed.
   2. Poly-4000 Top-Coat shall be installed in a minimum of four layers.
   3. Materials shall be applied in even layers with equipment specifically designed for the installation of resilient surfacing. Thorough curing between each layer is required before successive coats are applied.
   4. Poly-4000 Top-Coat shall consist of a minimum quantity of 6.0 pounds per square yard of specified rubber granules and not less than 2.6 pounds per square yard of polymer resin binder and a minimum of 1.2 pounds per square yard of polymer resin coating.

B. Striping
   1. Striping Contractor shall verify with Owner’s representative the exact locations, size, shape, and color of the lines and markings before proceeding with striping and markings.
   2. Engineer the layout of lane lines, starting lines, and markings as prescribed or approved by the Owner’s representative, Architect/Engineer and the appropriate governing body; NFHS, NCAA, or IAAF.
   3. All lines and markings shall be spray applied by experienced personnel utilizing equipment manufactured for line striping. Striping lines and markings shall have true sharp edges.

3.4 CLEANING

A. Upon completion of work remove all containers, surplus materials, and installation debris.

B. Leave area of work in clean orderly condition ready for use by Owner.

06/10/2013
Product Specifications\W:\submittals\2013 submittals\poly-4000

Bidder:FieldTurf USA, Inc.
G.3
1 yr warranty

RED POLYRESIN TRACK RESURFACING SYSTEM

1.0 DESCRIPTION

This specification covers the installation of a high performance resilient track resurfacing system for existing polyresin surfaces. This track system utilizes specially compounded, pigmented, water-based binders and EPDM rubber granules to provide strength, flexibility and to prevent ultra violet degradation. Multiple topcoats are applied to further protect against harmful UV rays and to reduce wear. The system provides a durable, resilient, spike resistant surface for recreational and competitive use.

NOTE: The success of the running track surface is dependent on a sound base (with good drainage) and the asphalt concrete meeting the requirements of The National Asphalt Paving Association and the American Sports Builders Association. Variations of the existing asphalt subsurface should not exceed 1/8" in 10' when measured in any direction with a straightedge.

2.0 MATERIALS – All liquid products shall be supplied by one manufacturer.

2.1 **Court Patch Binder**

2.2 **Latex tack coat**

2.3 **Polyresin Binder** – (Red).

2.4 **EPDM Granules** – Select granules for top layers approved by the manufacturer. (Red)

2.5 P**olyresin Coating** – (Red).

2.6 **Line Paint**

2.7 **Pigment** – Water-borne pigment for enhanced color depth (Red).

2.8 **Water** – The water used in all mixtures shall be fresh and potable.

3.0 SURFACE PREPARATION

3.1 Prior to the application of resurfacing materials; repair torn, delaminated or overly worn areas using a mixture of rubber granules and polyurethane binder.

3.2 Clean existing surface using soft-bristle brooms, power blowers and pressure washer (when necessary).

4.0 CONSTRUCTION

Allow all patchwork to cure thoroughly. The surface to be coated must be sound, smooth and free from dust, dirt, or oily materials.

4.1 **Primer Coat** – A tack coat of must be applied over the entire surface at a rate of .04 gal./s.y. Allow to dry thoroughly.

4.2 **Track Resurface** – Rubber granules shall be applied evenly at a rate of 5lbs per square yard in 2 layer. Each layer will be sprayed with pigmented polyresin binder at a rate of 1 gallon of binder per 18 lbs of epdm rubber granules.

To further enhance color depth, it is recommended to add 5 gallons of pigment to each 300 gallon tote of binder on the final spray coat. Pigment is a water-borne colorant.

The coverage rate for rubber granules is dependent on the specific gravity (density) of the rubber and the installation method of the surfacing system. Different densities will affect the dry bulking value of the rubber, which determines the weight per square yard for a specified thickness. The specific gravity for rubber particles can vary between colors, size, and manufacturers. It is recommended to consult the manufacturer for more information. Also, different application methods can affect the overall system density requiring lower or higher volumes of product. System weights and volumes shall be verified by on site sample methods.

4.3 **Top Coat** – Polyresin Coating shall be applied by approved spray equipment at a rate of not less than .10 gallons per square yard.

4.4 **Line striping** – Line paint shall be applied to meet all rules and regulations of the local track federation.

5.0 LIMITATIONS

- No part of the construction shall be conducted during rainfall or when rain is imminent.
- Allow 4-5 hours to cure at least 70F. Lower temperature and higher temperature will increase the drying time.
- Do not apply when surface temperature is above 130F.
- Apply only when ambient temperature is 50F and rising.
- Keep from freezing. Do not store in the hot sun.

- The Polyresin Track System will not prevent pavement cracks from occurring.
- Allow applications to thoroughly cure prior to subsequent applications.
- Use caution when applying materials near adjacent areas. Mask when necessary to prevent over spray.
- Allow new asphalt to cure for a minimum of 14 days.

6.0 PHYSICAL PROPERTIES

6.1 The polyresin binder is a high solids pigmented binder containing special fibers to promote strength. It is capable of drying/curing to a depth of 10mm in a single lift when mixed at the specified levels of 1-3mm rubber granules:

Viscosity > 90 ku or >1200 cps Pigment and Filler > 6% total formula

6.2 The polyresin coating is a fully pigmented acrylic topcoat system designed to have a high resistance to ultraviolet light. It is made from acrylic resins specifically designed for track surfaces to provide a tough, long lasting surface that can withstand the elements. It should be applied in 2 coats at a coverage rate of .05 gal./s.y. per coat.

6.3 **Rubber Properties**: 1-3mm Sieve Analysis – other sieve sizes may be used to achieve a different surface texture or force reduction characteristic; at the discretion of the owner and/or installer. Rubber supply can vary.

Mesh	**M.M.**	**% Retained**	Specific Gravity: Hardness: Shore A, 55-75 durometer
6	3.36	0-15%	Black Rubber Granules: 1.15-1.40
10	2.00	60-85%	Color EPDM Rubber Granules: 1.40-1.60
18	1.00	10-30%	
PAN 1.00	0-5%		

7.0 QUALITY ASSURANCE:

Installer shall be a member in good standing of the American Sports Builders Association (ASBA), with specific qualifications in building and surfacing running tracks. Installer must employ a Certified Track Builder (CTB) as conferred by the ASBA. Approved installer must have remained in business under the same business name for double the length of the warrantee period.

8.0 DISCLAIMER:

Suggestions for use of our product or inclusion of descriptive material from patents should not be understood as recommending the use of our product in violation of any patents.

9.0 GENERAL:

Materials must be specifically designed for the construction of running track surfaces. Materials specified shall be delivered to the site in sealed drums or totes. Minimal addition of clear, fresh water at the job site is dependent on temperature and material flow. Coverage rates are based upon material prior to mixing with water. Dispose of empty containers in accordance with local, state and federal regulations.

SPORTSFIELD SPECIALTIES
41155 STATE HIGHWAY 10
PO BOX 231
DELHI, NY 13753
TOLL FREE: 888-975-3343
FAX: 607-746-8481

FieldTurf USA Inc

"DESIGNED TO MEET THE DEMANDS OF MODERN SPORTS CONSTRUCTION"

- **6" Square Pole with 4' Extension.**
- **Limited Lifetime Warranty.**
- **Optional Sleeve Sold Separately.**
- **Black Powder Coat Finish.**

402-797 - Spalding Dominator Pole System

Not To Scale

SPORTSFIELD SPECIALTIES
41155 STATE HIGHWAY 10
PO BOX 231
DELHI, NY 13753
TOLL FREE: 888-975-3343
FAX: 607-746-8481

FieldTurf USA Inc

"DESIGNED TO MEET THE DEMANDS OF MODERN SPORTS CONSTRUCTION"

- **High Performance Goal With 180-Degree Action for Collegiate Play**
- **7 Year Warranty.**
- **Meets NCAA and NFHS Specifications**
- **Includes Anti-Whip Net**

411-704 - Slam-Dunk® Precision 180 Goal

Not To Scale

FieldTurf USA Inc

SPORTSFIELD SPECIALTIES

41155 STATE HIGHWAY 10
PO BOX 231
DELHI, NY 13753
TOLL FREE: 888-975-3343
FAX: 607-746-8481

"DESIGNED TO MEET THE DEMANDS OF MODERN SPORTS CONSTRUCTION"

- **Regulation Glass Backboard Meeting FIBA, NCAA, and NFHS Specifications**
- **Direct Goal Mount Designed to Prevent The Goal From Touching The Glass**
- **Limited Lifetime Warranty**

413-003 - SuperGlass Pro Backboard

Not To Scale

DESIGNED TO MEET THE DEMANDS
OF MODERN SPORTS CONSTRUCTION

41155 ST. HWY 10
PO BOX 231
DELHI, NY 13753
TOLL FREE: 888-975-3343
FAX: 607-746-8481

SPORTSFIELD SPECIALTIES
WWW.SPORTSFIELDSPECIALTIES.COM

- ***Made of a Pliable PVC Plastic that is Guaranteed Not to Crack***
- ***IAAF, NCAA and NFHS Compliant***
- ***Consists of Four (4) Interlocking Sections That Fit Inside a Discus Throw Circle, Instantly Converting to a Hammer Throw Circle***
- ***Easily Installed/Removed and Portable***

PROPRIETARY AND CONFIDENTIAL
THE INFORMATION CONTAINED IN THIS DRAWING IS THE SOLE PROPERTY OF SPORTSFIELD SPECIALTIES INC. ANY REPRODUCTION IN PART OR AS A WHOLE WITHOUT THE WRITTEN PERMISSION OF SPORTSFIELD SPECIALTIES INC. IS PROHIBITED.

TF362 - Gill Athletics Hammer Conversion Circle

Not To Scale

DESIGNED TO MEET THE DEMANDS
OF MODERN SPORTS CONSTRUCTION

41155 St. Hwy 10
PO Box 231
Delhi, NY 13753
Toll Free: 888-975-3343
Fax: 607-746-8481

FieldTurf USA Inc

SPORTSFIELD SPECIALTIES
WWW.SPORTSFIELDSPECIALTIES.COM

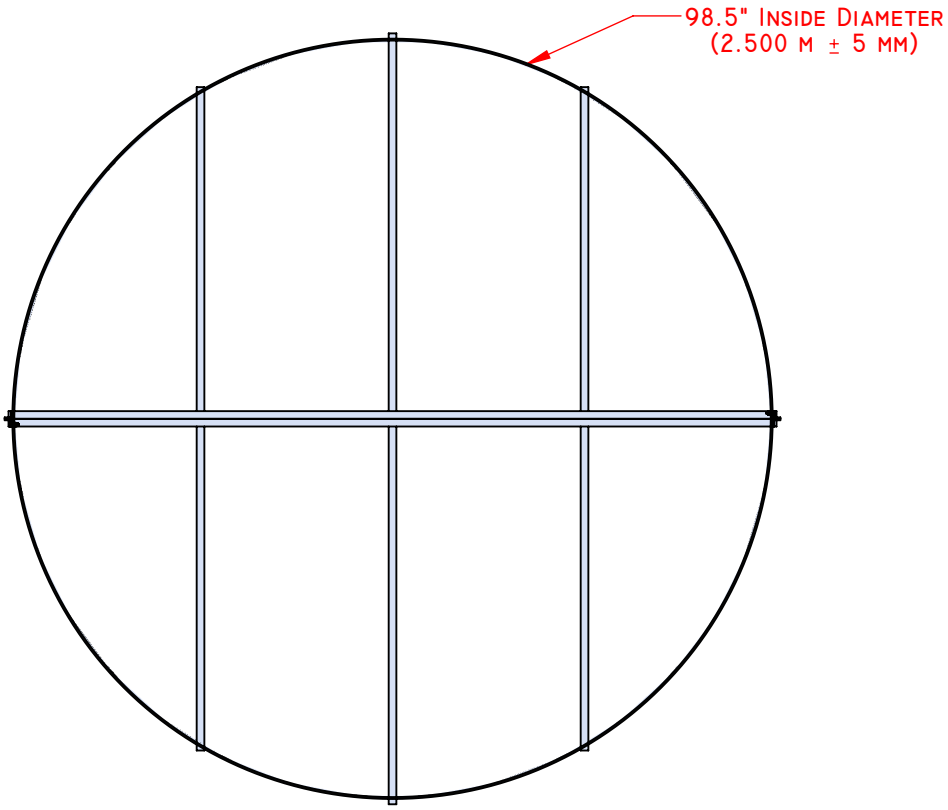

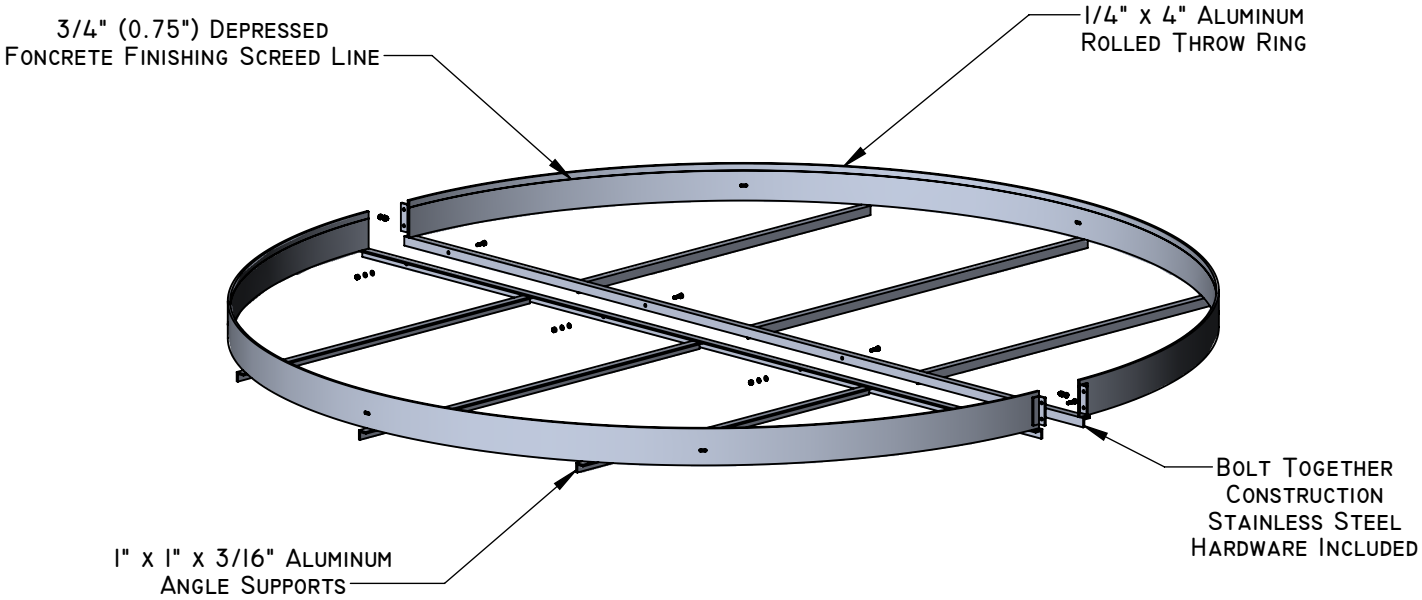

PROPRIETARY AND CONFIDENTIAL
THE INFORMATION CONTAINED IN THIS DRAWING IS THE SOLE PROPERTY OF SPORTSFIELD SPECIALTIES INC. ANY REPRODUCTION IN PART OR AS A WHOLE WITHOUT THE WRITTEN PERMISSION OF SPORTSFIELD SPECIALTIES INC. IS PROHIBITED.

TFDWRING
Discus Web Reinforced Throw Ring

Not To Scale

Sportsfield Specialties Inc 12112014

TFDWRING Webbed Discus Throw Ring

SECTION 11480 Athletic Equipment - Field

PART 1 GENERAL

1.01 WORK INCLUDED

A. Provide all equipment and materials, and do all work necessary to furnish and install the athletic equipment, as indicated on the drawings and as specified herein. Athletic equipment shall include, but not be limited to:

1. TFDWRING Webbed Discus Throw Ring

1.02 RELATED WORK

A. Examine contract documents for requirements that affect work of this section. Other specification sections that directly relate to the work of this section include, but are not limited to:

1. Section 02200 – Earthwork; Excavation and Backfill and establishment of sub-grade elevations.
2. Section 02511 – Asphalt, Concrete, and Pavement
3. Section 02535 – Synthetic Track Surfacing
4. Section 02542 – Synthetic Field Surfacing
5. Section 03300 – Cast-in-Place Concrete

1.03 REFERENCES

A. Comply with applicable requirements of the following standards. Where these standards conflict with other specified requirements, the most restrictive requirements shall govern.

1. National Federation of State High School Associations (NFHS)
2. National Collegiate Athletic Association (NCAA)
3. International Amateur Athletic Association (IAAF)
4. American Sports Builders Association (ASBA)
5. Manufacturers Data and Recommended Installation Requirements

1.04 SUBMITTALS

A. Manufacturers Product Data

1. Provide manufacturers product data prior to actual field installation work, for Architects or Owners representatives

review.

B. Shop Drawings

1. Provide drawings of the manufacturers recommended installation and foundation requirements prior to actual field installation work, for Architects or Owners representatives review.

1.05 QUALITY ASSURANCE

A. Manufacturers warranties shall pass to the Owner and certification made that the product materials meet all applicable grade trademarks or conform to industry standards and inspection requirements.

1.06 PRODUCT DELIVERY AND STORAGE

A. Materials delivered to the site shall be examined for damage or defects in shipping. Any defects shall be noted and reported to the Owners representative. Replacements, if necessary, shall be immediately re-ordered, so as to minimize any conflict with the construction schedule. Sound materials shall be stored above ground under protective cover or indoors so as to provide proper protection.

PART 2 PRODUCTS

2.01 Webbed Discus Throw Ring

A. BASE: TFDWRING Webbed Discus Throw Ring as manufactured by:

Sportsfield Specialties Inc.
P.O. Box 231
41155 State Highway 10
Delhi, NY 13753
p. 888-975-3343
f. 607-746-8481

B. COMPONENTS:

1. TFDWRING fabricated with 2.0in x 2.0in x .25in Aluminum Angle, 98.4in Diameter, having the following attributes:
   A. Aluminum Web Reinforcement

PART 3 EXECUTION

3.01 INSTALLATION OF EQUIPMENT

A. All athletic equipment shall be installed as recommended with manufacturer's written directions, and as indicated on the drawings.

END OF SECTION

DESIGNED TO MEET THE DEMANDS
OF MODERN SPORTS CONSTRUCTION

41155 ST. HWY 10
PO BOX 231
DELHI, NY 13753
TOLL FREE: 888-975-3343
FAX: 607-746-8481

FieldTurf USA Inc

SPORTSFIELD SPECIALTIES
WWW.SPORTSFIELDSPECIALTIES.COM

MEETS AND/OR EXCEEDS CURRENT IAAF SPECIFICATIONS, RULES AND REQUIREMENTS

STANDARD BLACK POWDER COATED FINISH

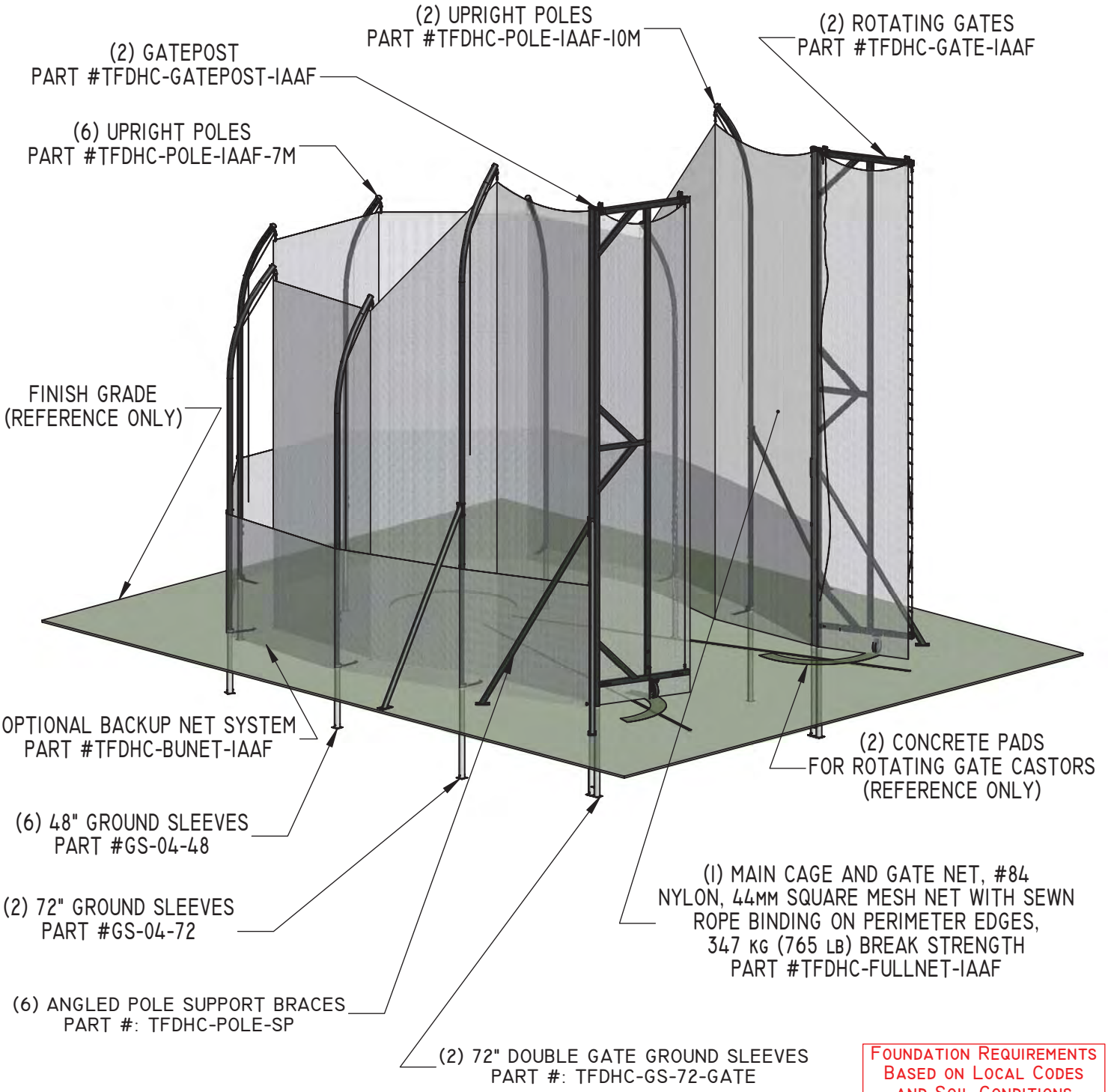

FOUNDATION REQUIREMENTS BASED ON LOCAL CODES AND SOIL CONDITIONS

PROPRIETARY AND CONFIDENTIAL
THE INFORMATION CONTAINED IN THIS DRAWING IS THE SOLE PROPERTY OF SPORTSFIELD SPECIALTIES INC. ANY REPRODUCTION IN PART OR AS A WHOLE WITHOUT THE WRITTEN PERMISSION OF SPORTSFIELD SPECIALTIES INC. IS PROHIBITED.

TFDHCIAAF - IAAF HAMMER/DISCUS CAGE
SINGLE PAD ELEVATION VIEW
WITH OPTIONAL BACKUP NET SYSTEM

NOT TO SCALE

SPORTSFIELD SPECIALTIES INC 11042014

DESIGNED TO MEET THE DEMANDS
OF MODERN SPORTS CONSTRUCTION

FieldTurf USA Inc

SPORTSFIELD SPECIALTIES
WWW.SPORTSFIELDSPECIALTIES.COM

41155 ST. HWY 10
PO BOX 231
DELHI, NY 13753
TOLL FREE: 888-975-3343
FAX: 607-746-8481

MEETS AND/OR EXCEEDS CURRENT IAAF SPECIFICATIONS, RULES AND REQUIREMENTS

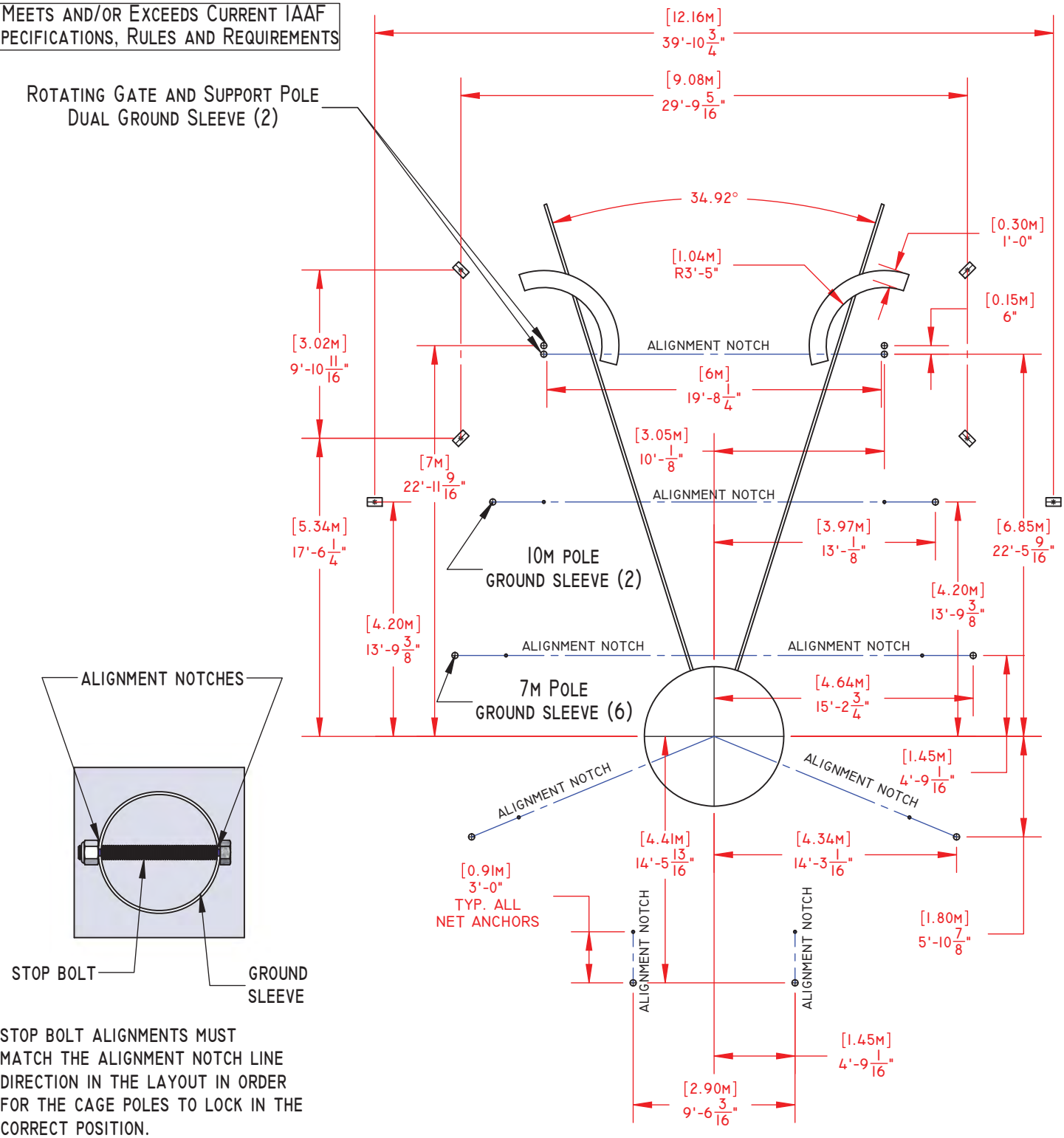

STOP BOLT ALIGNMENTS MUST MATCH THE ALIGNMENT NOTCH LINE DIRECTION IN THE LAYOUT IN ORDER FOR THE CAGE POLES TO LOCK IN THE CORRECT POSITION.

PROPRIETARY AND CONFIDENTIAL
THE INFORMATION CONTAINED IN THIS DRAWING IS THE SOLE PROPERTY OF SPORTSFIELD SPECIALTIES INC. ANY REPRODUCTION IN PART OR AS A WHOLE WITHOUT THE WRITTEN PERMISSION OF SPORTSFIELD SPECIALTIES INC. IS PROHIBITED.

IAAF HAMMER/DISCUS CAGE, SINGLE PAD GROUND SLEEVE LAYOUT

NOT TO SCALE

SPORTSFIELD SPECIALTIES INC 11202014

DESIGNED TO MEET THE DEMANDS
OF MODERN SPORTS CONSTRUCTION

41155 ST. HWY 10
PO BOX 231
DELHI, NY 13753
TOLL FREE: 888-975-3343
FAX: 607-746-8481

SPORTSFIELD SPECIALTIES
WWW.SPORTSFIELDSPECIALTIES.COM

FieldTurf USA Inc

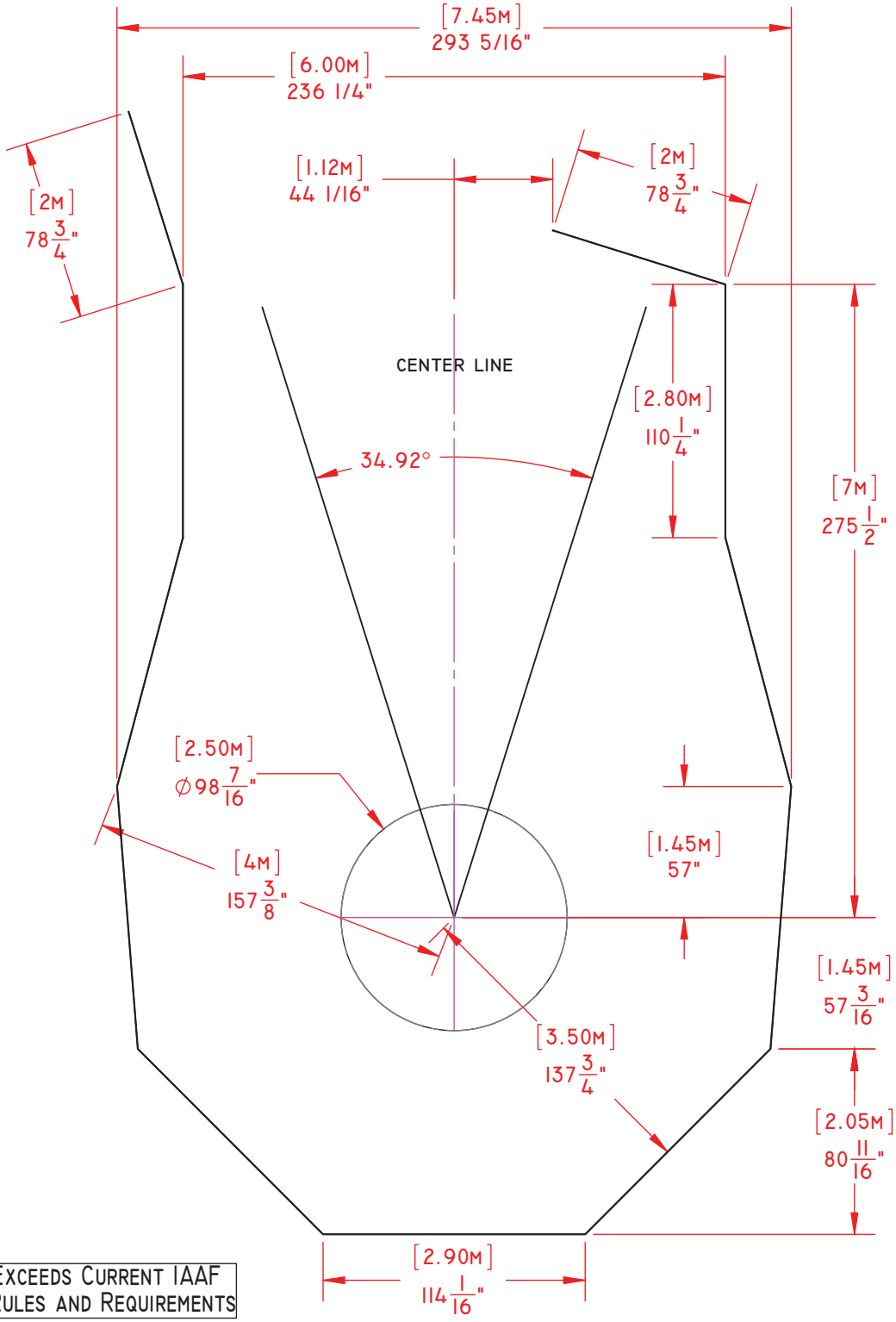

MEETS AND/OR EXCEEDS CURRENT IAAF SPECIFICATIONS, RULES AND REQUIREMENTS

PROPRIETARY AND CONFIDENTIAL
THE INFORMATION CONTAINED IN THIS DRAWING IS THE SOLE PROPERTY OF SPORTSFIELD SPECIALTIES INC. ANY REPRODUCTION IN PART OR AS A WHOLE WITHOUT THE WRITTEN PERMISSION OF SPORTSFIELD SPECIALTIES INC. IS PROHIBITED.

TFDHCIAAF - IAAF HAMMER/DISCUS CAGE SINGLE PAD LAYOUT

NOT TO SCALE

SPORTSFIELD SPECIALTIES INC 11142014

DESIGNED TO MEET THE DEMANDS
OF MODERN SPORTS CONSTRUCTION

41155 ST. HWY 10
PO BOX 231
DELHI, NY 13753
TOLL FREE: 888-975-3343
FAX: 607-746-8481

FieldTurf USA Inc

SPORTSFIELD SPECIALTIES
WWW.SPORTSFIELDSPECIALTIES.COM

UNITED STATES PATENT #7,641,593, ISSUED JANUARY 5, 2010
UNITED STATES PATENT #8,186,125, ISSUED MAY 29, 2012
UNITED STATES PATENT #8,745,955, ISSUED JUNE 10, 2014

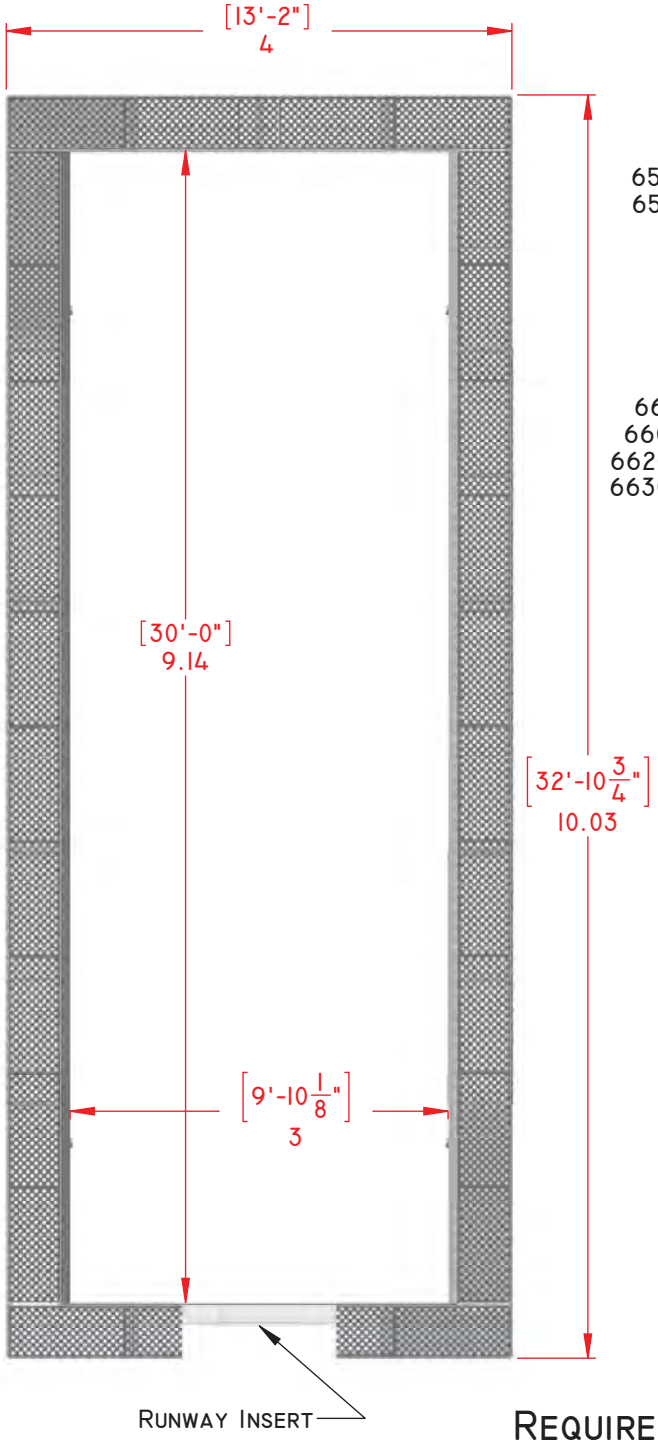

BASE FORMS WITH CROSS SUPPORT STRUCTURE AND SAND CATCHERS CONSTRUCTED OF 1/8" ALUMINUM

6430 ALUMINUM METAL GRATE MAT SUPPORTS

6423 RUBBER MATS WITH 1-1/4" ROUND PERFORATIONS

BASE FORM ASSEMBLY
6525 L.H. CORNER BASE FORM W/DRAIN (2)
6535 R.H. CORNER BASE FORM W/DRAIN (2)
6502 2 METER BASE FORM (8)

SAND CATCHER ASSEMBLY
6601 SAND CATCHER W/ RUNWAY INSERT (1)
6603 SAND CATCHER W/O RUNWAY INSERT (1)
6620 L.H. CORNER SAND CATCHER W/DRAIN (2)
6630 R.H. CORNER SAND CATCHER W/DRAIN (2)
6602 2 METER SAND CATCHER (6)

6430 METAL GRATE MAT SUPPORTS
36" LONG (26)
18" LONG (2)
12" LONG (1)

6423 RUBBER MATS
36" LONG (26)
18" LONG (2)
12" LONG (1)

SP6010-HD
HARDWARE KIT INCLUDES
ALL STAINLESS STEEL
ASSEMBLY HARDWARE
6525-DRAIN

MEETS NCAA
REQUIREMENTS AND SPECIFICATIONS

PROPRIETARY AND CONFIDENTIAL
THE INFORMATION CONTAINED IN THIS DRAWING IS THE SOLE PROPERTY OF SPORTSFIELD SPECIALTIES INC. ANY REPRODUCTION IN PART OR AS A WHOLE WITHOUT THE WRITTEN PERMISSION OF SPORTSFIELD SPECIALTIES INC. IS PROHIBITED.

SP6010 JUMPFORM®
COLLEGE 3M X 9M SAND PIT WITH SAND CATCHERS

NOT TO SCALE

SPORTSFIELD SPECIALTIES INC 11012014

DESIGNED TO MEET THE DEMANDS
OF MODERN SPORTS CONSTRUCTION

41155 ST. HWY 10
PO BOX 231
DELHI, NY 13753
TOLL FREE: 888-975-3343
FAX: 607-746-8481

FieldTurf USA Inc

SPORTSFIELD SPECIALTIES
WWW.SPORTSFIELDSPECIALTIES.COM

UNITED STATES PATENT #7,641,593, ISSUED JANUARY 5, 2010
UNITED STATES PATENT #8,186,125, ISSUED MAY 29, 2012
UNITED STATES PATENT #8,745,955, ISSUED JUNE 10, 2014

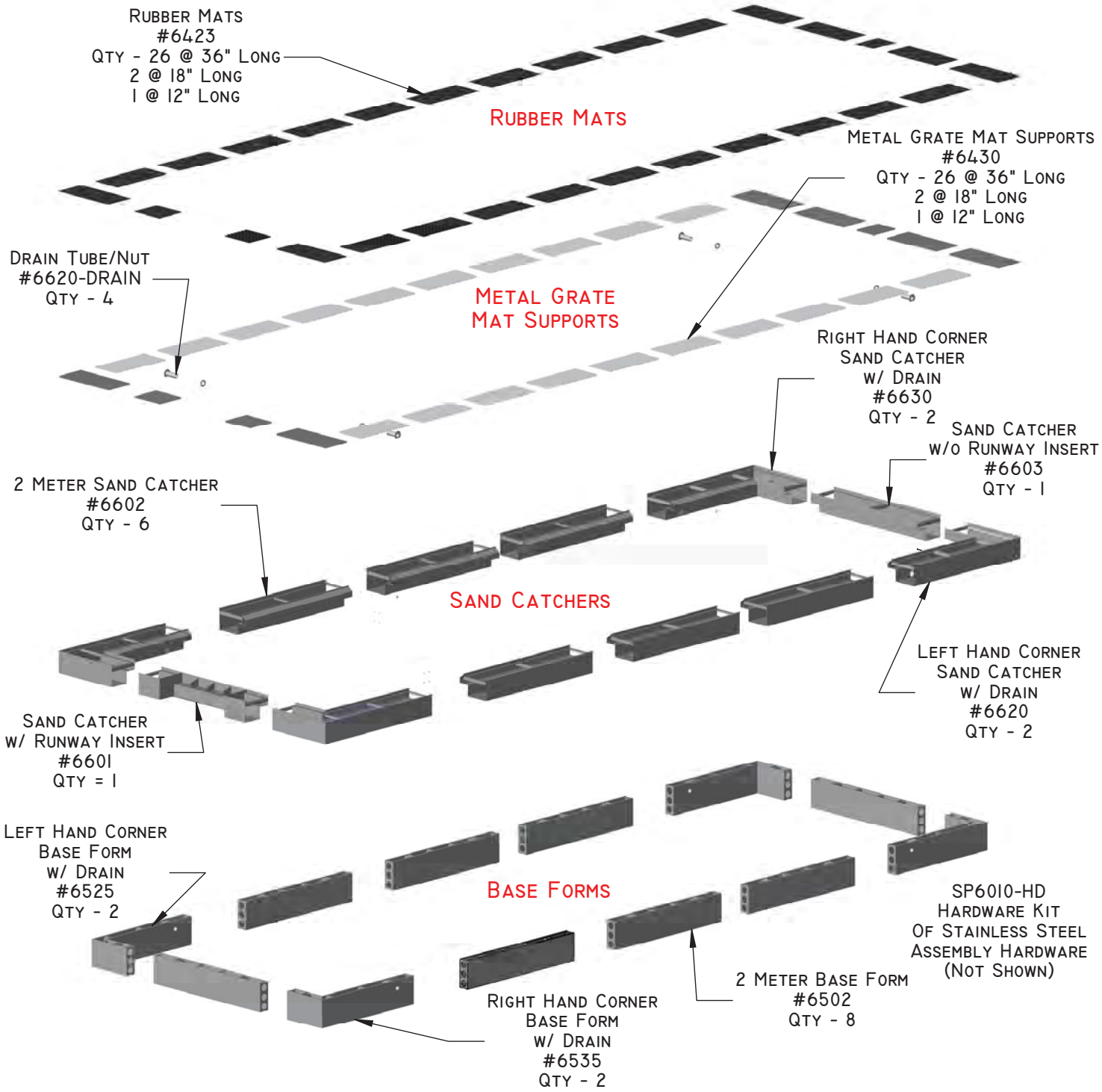

PROPRIETARY AND CONFIDENTIAL
THE INFORMATION CONTAINED IN THIS DRAWING IS THE SOLE PROPERTY OF SPORTSFIELD SPECIALTIES INC. ANY REPRODUCTION IN PART OR AS A WHOLE WITHOUT THE WRITTEN PERMISSION OF SPORTSFIELD SPECIALTIES INC. IS PROHIBITED.

SP6010 JUMPFORM® EXPLODED VIEW
COLLEGE 3M X 9M SAND PIT WITH SAND CATCHERS

NOT TO SCALE

SPORTSFIELD SPECIALTIES INC 11012014

DESIGNED TO MEET THE DEMANDS
OF MODERN SPORTS CONSTRUCTION

41155 ST. HWY 10
PO BOX 231
DELHI, NY 13753
TOLL FREE: 888-975-3343
FAX: 607-746-8481

FieldTurf USA Inc

SPORTSFIELD SPECIALTIES
WWW.SPORTSFIELDSPECIALTIES.COM

6800 College Sand Pit Cover Set (12-6801 Covers)

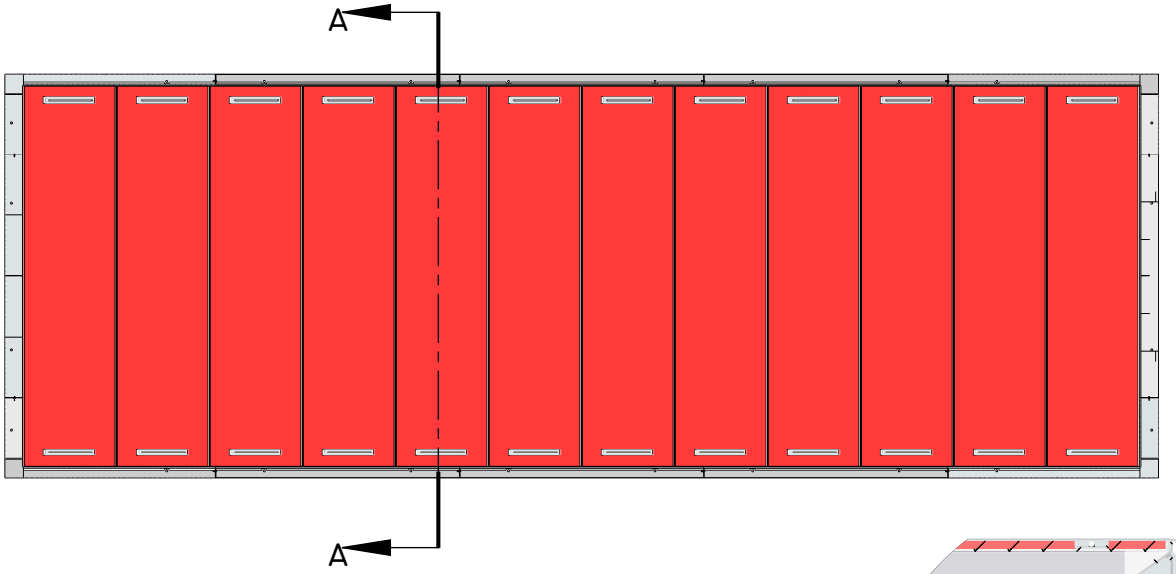

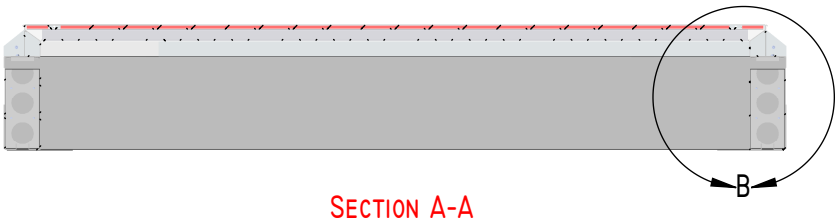

Section A-A

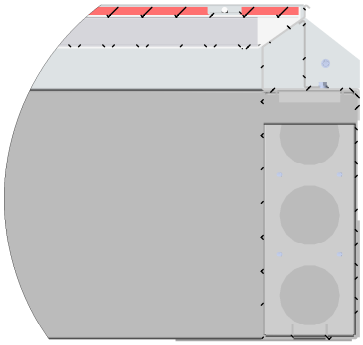

Detail B

6801 Individual Cover

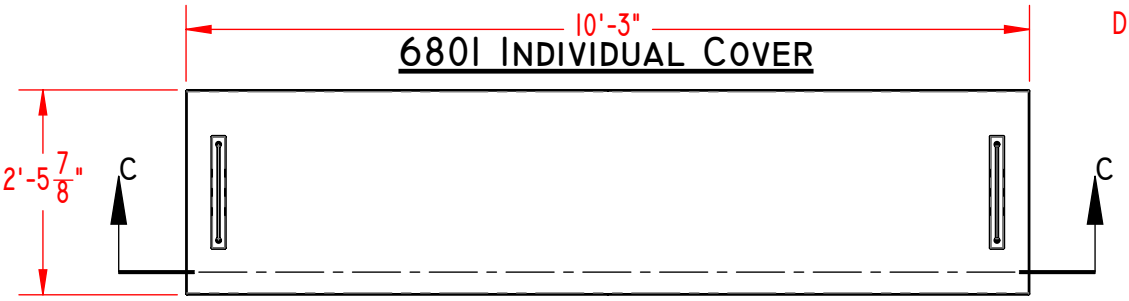

Product Weights
6800 - 960Lbs/Set
6801 - 80Lbs Each
*Weights Prior To Surfacing

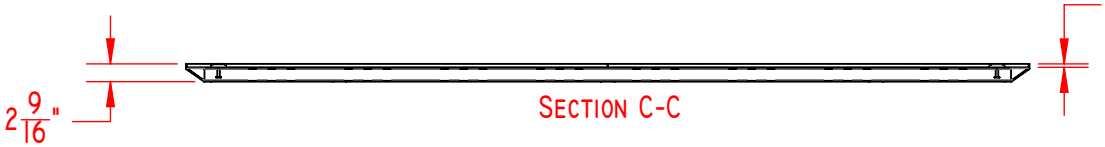

Section C-C

1/2" Recess to Accept Synthetic Track Surface by Others

PROPRIETARY AND CONFIDENTIAL
THE INFORMATION CONTAINED IN THIS DRAWING IS THE SOLE PROPERTY OF SPORTSFIELD SPECIALTIES INC. ANY REPRODUCTION IN PART OR AS A WHOLE WITHOUT THE WRITTEN PERMISSION OF SPORTSFIELD SPECIALTIES INC. IS PROHIBITED.

SP6800 College Sand Pit Cover Set

Not To Scale

Sportsfield Specialties Inc 11012014

DESIGNED TO MEET THE DEMANDS
OF MODERN SPORTS CONSTRUCTION

41155 ST. HWY 10
PO BOX 231
DELHI, NY 13753
TOLL FREE: 888-975-3343
FAX: 607-746-8481

FieldTurf USA Inc

SPORTSFIELD SPECIALTIES
WWW.SPORTSFIELDSPECIALTIES.COM

STANDARD POWDER COATED WHITE FINISH
YELLOW & ORANGE AVAILABLE

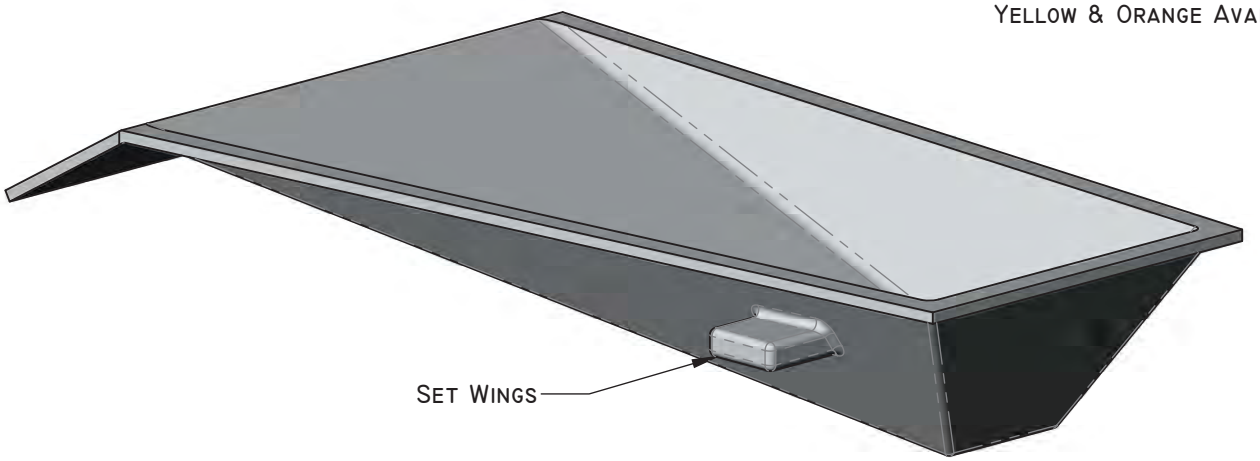

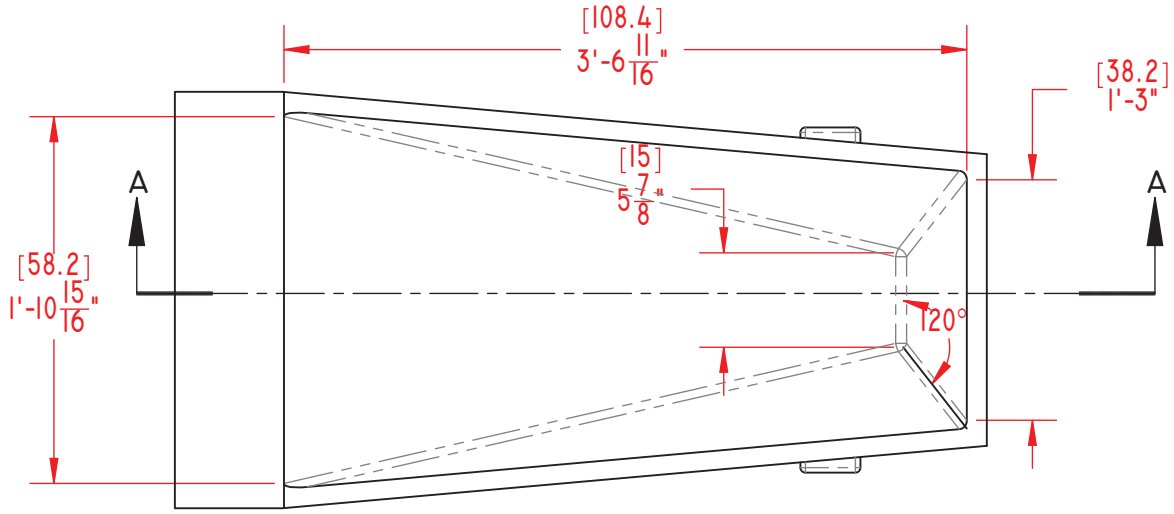

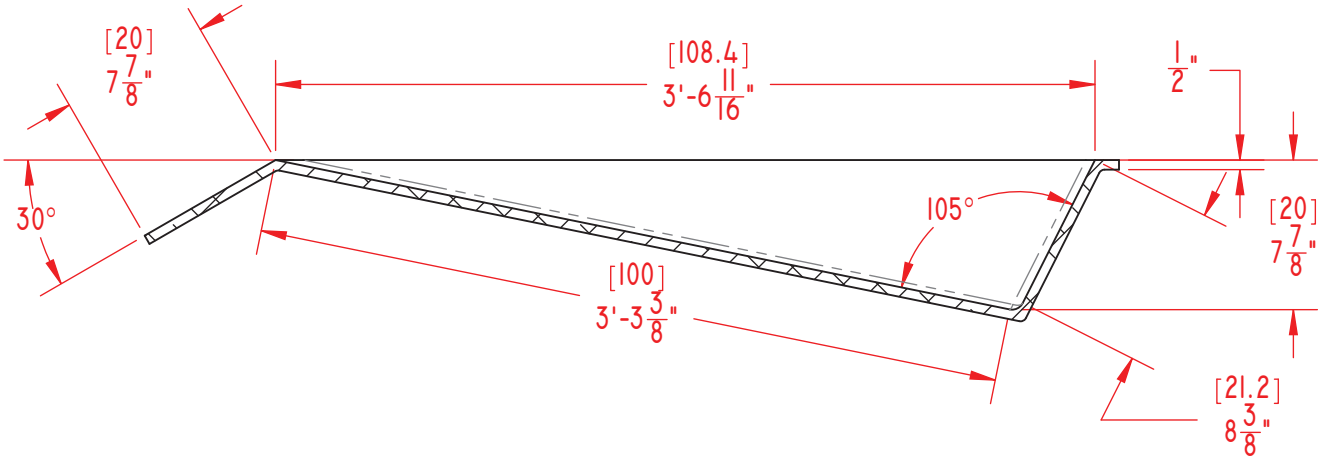

MEETS AND/OR EXCEEDS ALL IAAF, NCAA AND NFHS SPECIFICATIONS

PROPRIETARY AND CONFIDENTIAL
THE INFORMATION CONTAINED IN THIS DRAWING IS THE SOLE PROPERTY OF SPORTSFIELD SPECIALTIES INC. ANY REPRODUCTION IN PART OR AS A WHOLE WITHOUT THE WRITTEN PERMISSION OF SPORTSFIELD SPECIALTIES INC. IS PROHIBITED.

TFPV001CA - CAST ALUMINUM VAULT BOX

NOT TO SCALE

SPORTSFIELD SPECIALTIES INC 11012014

TFPV001CA Cast Aluminum Pole Vault Box with TFPV003ALTR-CA Cover Plug

SECTION 11480 Athletic Equipment - Track & Field

PART 1 GENERAL

1.01 WORK INCLUDED

A. Provide all equipment and materials, and do all work necessary to furnish and install the athletic equipment, as indicated on the drawings and as specified herein. Athletic equipment shall include, but not be limited to:

1. TFPV001CA Vault Box with TFPV003ALTR-CA Cover Plug

1.02 RELATED WORK

A. Examine contract documents for requirements that affect work of this section. Other specification sections that directly relate to the work of this section include, but are not limited to:

1. Section 02200 – Earthwork; Excavation and Backfill and establishment of sub-grade elevations.
2. Section 02511 – Asphalt, Concrete, and Pavement
3. Section 02535 – Synthetic Track Surfacing
4. Section 02542 – Synthetic Field Surfacing
5. Section 03300 – Cast-in-Place Concrete

1.03 REFERENCES

A. Comply with applicable requirements of the following standards. Where these standards conflict with other specified requirements, the most restrictive requirements shall govern.

1. National Federation of State High School Associations (NFHS)
2. National Collegiate Athletic Association (NCAA)
3. International Amateur Athletic Association (IAAF)
4. American Sports Builders Association (ASBA)
5. Manufacturers Data and Recommended Installation Requirements

1.04 SUBMITTALS

A. Manufacturers Product Data

1. Provide manufacturers product data prior to actual field installation work, for Architects or Owners representatives

review.

B. Shop Drawings

1. Provide drawings of the manufacturers recommended installation and foundation requirements prior to actual field installation work, for Architects or Owners representatives review.

1.05 QUALITY ASSURANCE

A. Manufacturers warranties shall pass to the Owner and certification made that the product materials meet all applicable grade trademarks or conform to industry standards and inspection requirements.

1.06 PRODUCT DELIVERY AND STORAGE

A. Materials delivered to the site shall be examined for damage or defects in shipping. Any defects shall be noted and reported to the Owners representative. Replacements, if necessary, shall be immediately re-ordered, so as to minimize any conflict with the construction schedule. Sound materials shall be stored above ground under protective cover or indoors so as to provide proper protection.

PART 2 PRODUCTS

2.01 Cast Aluminum Pole Vault Box with Cover Plug

BASE: TFPV001CA Pole Vault Box with TFPV003ALTR-CA Cover Plug as manufactured by:

Sportsfield Specialties Inc.
P.O. Box 231
41155 State Highway 10
Delhi, NY 13753
p. 888-975-3343
f. 607-746-8481

B. COMPONENTS:

1. TFPV001CA Pole Vault Box fabricated with ½" Cast Aluminum having the following attributes:
   A. Regulation Size
   B. Cast Aluminum Setting Wings for Concrete Encasement
   C. Powder Coating White (Yellow & Orange Available)

2. TFPV003ALTR-CA Cover Plug fabricated with 1/8” Aluminum having the following attributes:
    A. Sized to Fill Void of Vault Box
    B. Top Surface Recessed ½” to Accept Synthetic Track Material

PART 3 EXECUTION

3.01 INSTALLATION OF EQUIPMENT

A. All athletic equipment shall be installed as recommended with manufacturer's written directions, and as indicated on the drawings.

END OF SECTION

DESIGNED TO MEET THE DEMANDS
OF MODERN SPORTS CONSTRUCTION

41155 ST. HWY 10
PO BOX 231
DELHI, NY 13753
TOLL FREE: 888-975-3343
FAX: 607-746-8481

FieldTurf USA Inc

SPORTSFIELD SPECIALTIES
WWW.SPORTSFIELDSPECIALTIES.COM

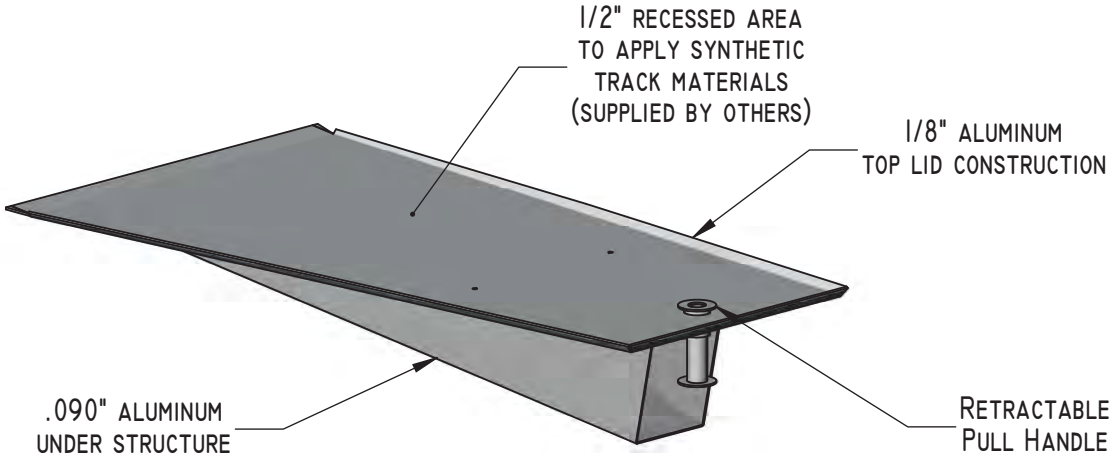

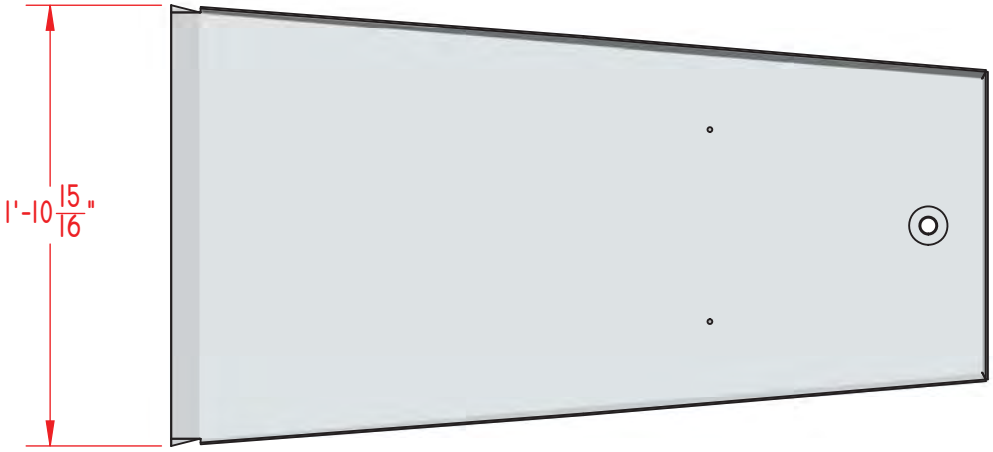

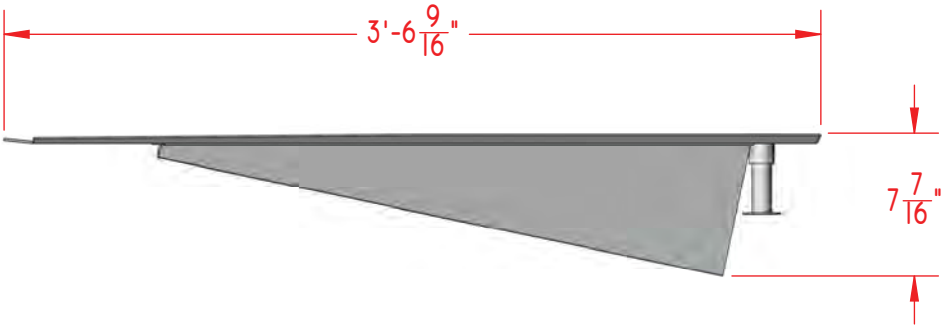

PROPRIETARY AND CONFIDENTIAL
THE INFORMATION CONTAINED IN THIS DRAWING IS THE SOLE PROPERTY OF SPORTSFIELD SPECIALTIES INC. ANY REPRODUCTION IN PART OR AS A WHOLE WITHOUT THE WRITTEN PERMISSION OF SPORTSFIELD SPECIALTIES INC. IS PROHIBITED.

TFPV003ALTR-CA - Cast Aluminum Vault Box Cover Plug

Not To Scale

Sportsfield Specialties Inc 11012014

TFPV003ALTR-CA - Vault Box Cover Plug

SECTION 11480 Athletic Equipment - Track & Field

PART 1 GENERAL

1.01 WORK INCLUDED

A. Provide all equipment and materials, and do all work necessary to furnish and install the athletic equipment, as indicated on the drawings and as specified herein. Athletic equipment shall include, but not be limited to:

1. TFPV003ALTR-CA - Vault Box Cover Plug

1.02 RELATED WORK

A. Examine contract documents for requirements that affect work of this section. Other specification sections that directly relate to the work of this section include, but are not limited to:

1. Section 02200 – Earthwork; Excavation and Backfill and establishment of sub-grade elevations.
2. Section 02511 – Asphalt, Concrete, and Pavement
3. Section 02535 – Synthetic Track Surfacing
4. Section 02542 – Synthetic Field Surfacing
5. Section 03300 – Cast-in-Place Concrete

1.03 REFERENCES

A. Comply with applicable requirements of the following standards. Where these standards conflict with other specified requirements, the most restrictive requirements shall govern.

1. National Federation of State High School Associations (NFHS)
2. National Collegiate Athletic Association (NCAA)
3. International Amateur Athletic Association (IAAF)
4. American Sports Builders Association (ASBA)
5. Manufacturers Data and Recommended Installation Requirements

1.04 SUBMITTALS

A. Manufacturers Product Data

1. Provide manufacturers product data prior to actual field installation work, for Architects or Owners representatives

review.

B. Shop Drawings

1. Provide drawings of the manufacturers recommended installation and foundation requirements prior to actual field installation work, for Architects or Owners representatives review.

1.05 QUALITY ASSURANCE

A. Manufacturers warranties shall pass to the Owner and certification made that the product materials meet all applicable grade trademarks or conform to industry standards and inspection requirements.

1.06 PRODUCT DELIVERY AND STORAGE

A. Materials delivered to the site shall be examined for damage or defects in shipping. Any defects shall be noted and reported to the Owners representative. Replacements, if necessary, shall be immediately re-ordered, so as to minimize any conflict with the construction schedule. Sound materials shall be stored above ground under protective cover or indoors so as to provide proper protection.

PART 2 PRODUCTS

2.01 Aluminum Vault Box Cover Plug

A. BASE: TFPV003ALTR-CA - Vault Box Cover Plug as manufactured by:

Sportsfield Specialties Inc.
P.O. Box 231
41155 State Highway 10
Delhi, NY 13753
p. 888-975-3343
f. 607-746-8481

B. COMPONENTS:

1. TFPV003ALTR-CA Cover Plug fabricated with 0.90in Aluminum understructure and .125in Aluminum top lid having the following attributes:
   A. Sized to Fill Void of Standard Cast Aluminum Vault Box
   B. Top Surface Recessed 0.50in to Accept Synthetic Track Material

PART 3 EXECUTION

3.01 INSTALLATION OF EQUIPMENT

A. All athletic equipment shall be installed as recommended with manufacturer's written directions, and as indicated on the drawings.

END OF SECTION

TFSPT001AL Shot Put Toe Board (Depressed Pad)

SECTION 11480 Athletic Equipment - Track & Field

PART 1 GENERAL

1.01 WORK INCLUDED

A. Provide all equipment and materials, and do all work necessary to furnish and install the athletic equipment, as indicated on the drawings and as specified herein. Athletic equipment shall include, but not be limited to:

1. TFSPT001AL Shot Put Toe Board (Depressed Pad)

1.02 RELATED WORK

A. Examine contract documents for requirements that affect work of this section. Other specification sections that directly relate to the work of this section include, but are not limited to:

1. Section 02200 – Earthwork; Excavation and Backfill and establishment of sub-grade elevations.
2. Section 02511 – Asphalt, Concrete, and Pavement
3. Section 02535 – Synthetic Track Surfacing
4. Section 02542 – Synthetic Field Surfacing
5. Section 03300 – Cast-in-Place Concrete

1.03 REFERENCES

A. Comply with applicable requirements of the following standards. Where these standards conflict with other specified requirements, the most restrictive requirements shall govern.

1. National Federation of State High School Associations (NFHS)
2. National Collegiate Athletic Association (NCAA)
3. International Amateur Athletic Association (IAAF)
4. American Sports Builders Association (ASBA)
5. Manufacturers Data and Recommended Installation Requirements

1.04 SUBMITTALS

A. Manufacturers Product Data

1. Provide manufacturers product data prior to actual field installation work, for Architects or Owners representatives

review.

B. Shop Drawings

1. Provide drawings of the manufacturers recommended installation and foundation requirements prior to actual field installation work, for Architects or Owners representatives review.

1.05 QUALITY ASSURANCE

A. Manufacturers warranties shall pass to the Owner and certification made that the product materials meet all applicable grade trademarks or conform to industry standards and inspection requirements.

1.06 PRODUCT DELIVERY AND STORAGE

A. Materials delivered to the site shall be examined for damage or defects in shipping. Any defects shall be noted and reported to the Owners representative. Replacements, if necessary, shall be immediately re-ordered, so as to minimize any conflict with the construction schedule. Sound materials shall be stored above ground under protective cover or indoors so as to provide proper protection.

PART 2 PRODUCTS

2.01 Cast Aluminum Shot Put Toe Board (Depressed Pad)

A. BASE: TFSPT001AL Shot Put Toe Board as manufactured by:

Sportsfield Specialties Inc.
P.O. Box 231
41155 State Highway 10
Delhi, NY 13753
p. 888-975-3343
f. 607-746-8481

B. COMPONENTS:

1. Model # TFSPT001AL Cast Aluminum Toe Board having the following attributes:
   A. Standard Size, 3.25in Height for Depressed Pad Installation
   B. Powder Coated White
   C. 34.92° Black Sector Identifiers

PART 3 EXECUTION

3.01 INSTALLATION OF EQUIPMENT

A. All athletic equipment shall be installed as recommended with manufacturer's written directions, and as indicated on the drawings.

END OF SECTION

DESIGNED TO MEET THE DEMANDS
OF MODERN SPORTS CONSTRUCTION

41155 ST. HWY 10
PO BOX 231
DELHI, NY 13753
TOLL FREE: 888-975-3343
FAX: 607-746-8481

FieldTurf USA Inc

SPORTSFIELD SPECIALTIES
WWW.SPORTSFIELDSPECIALTIES.COM

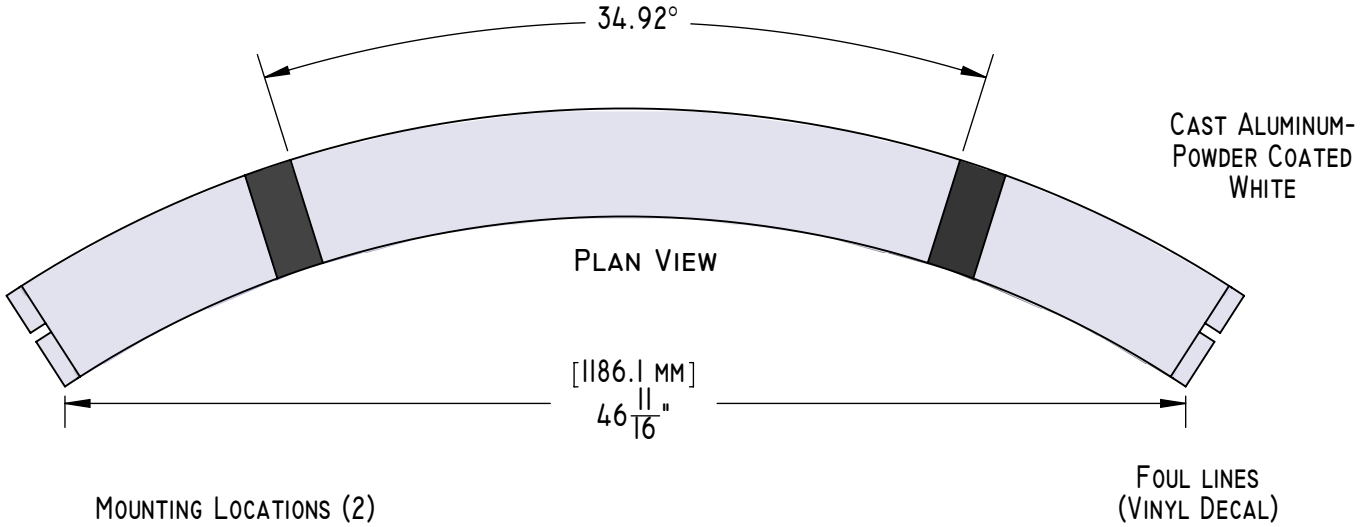

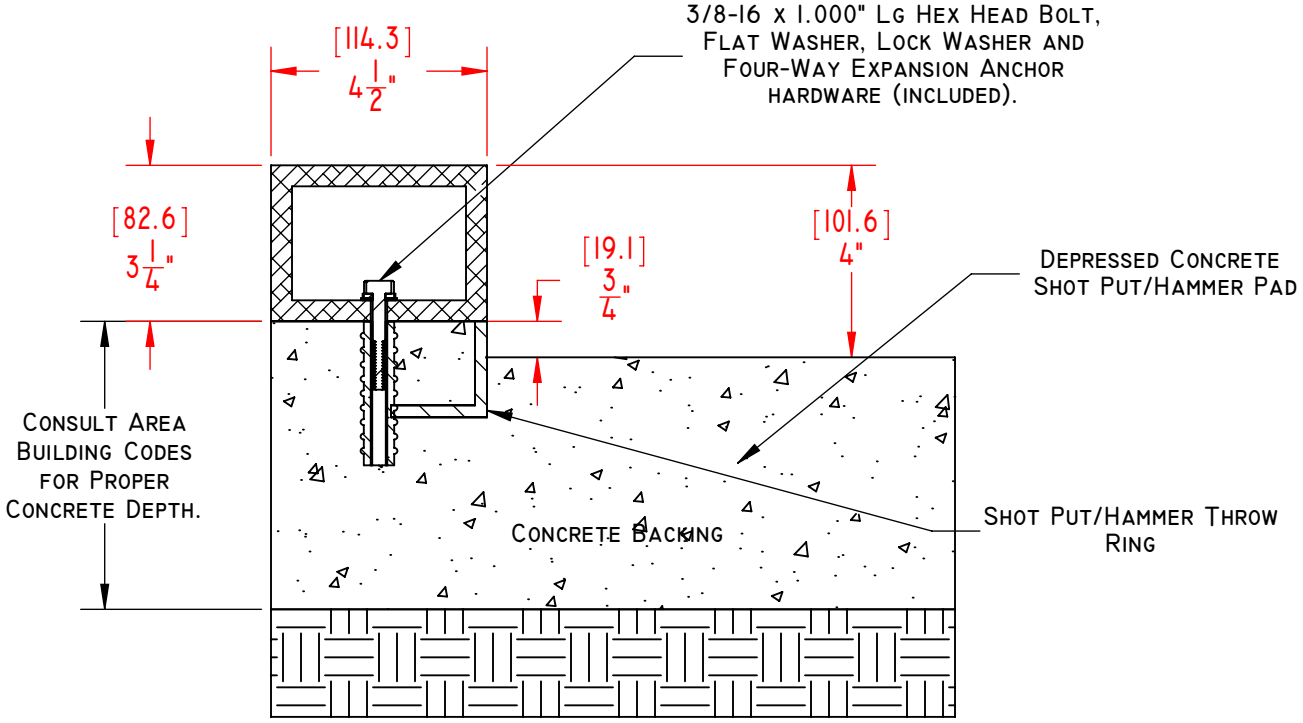

Side View

PROPRIETARY AND CONFIDENTIAL
THE INFORMATION CONTAINED IN THIS DRAWING IS THE SOLE PROPERTY OF SPORTSFIELD SPECIALTIES INC. ANY REPRODUCTION IN PART OR AS A WHOLE WITHOUT THE WRITTEN PERMISSION OF SPORTSFIELD SPECIALTIES INC. IS PROHIBITED.

TFSPT001AL - Shot Put Toe Board Depressed Pad Installation

Not To Scale

Sportsfield Specialties Inc 11012014

DESIGNED TO MEET THE DEMANDS
OF MODERN SPORTS CONSTRUCTION

41155 St. Hwy 10
PO Box 231
Delhi, NY 13753
Toll Free: 888-975-3343
Fax: 607-746-8481

FieldTurf USA Inc

SPORTSFIELD SPECIALTIES
WWW.SPORTSFIELDSPECIALTIES.COM

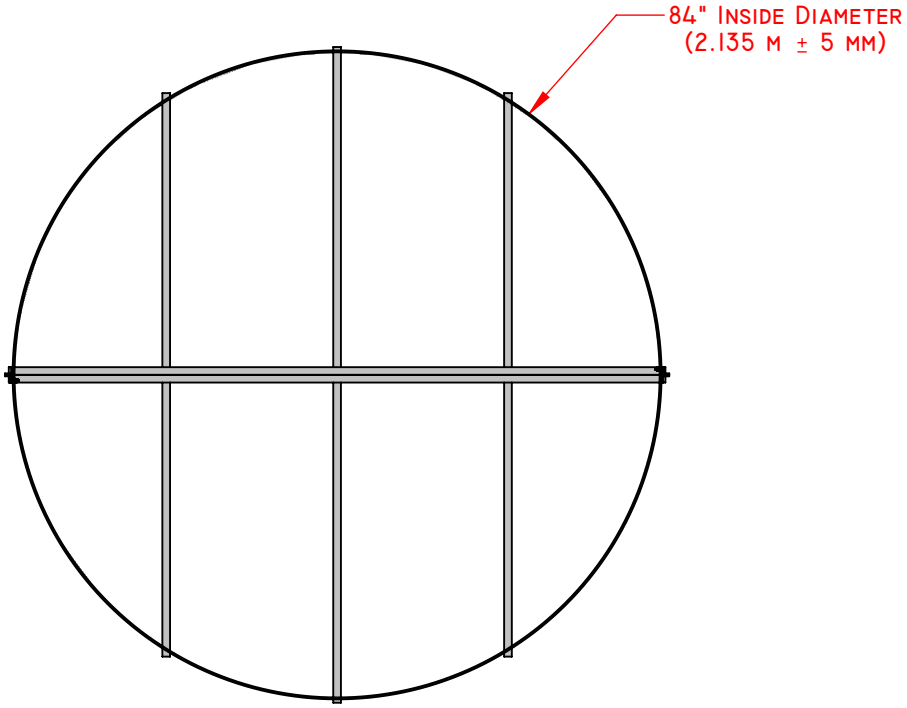

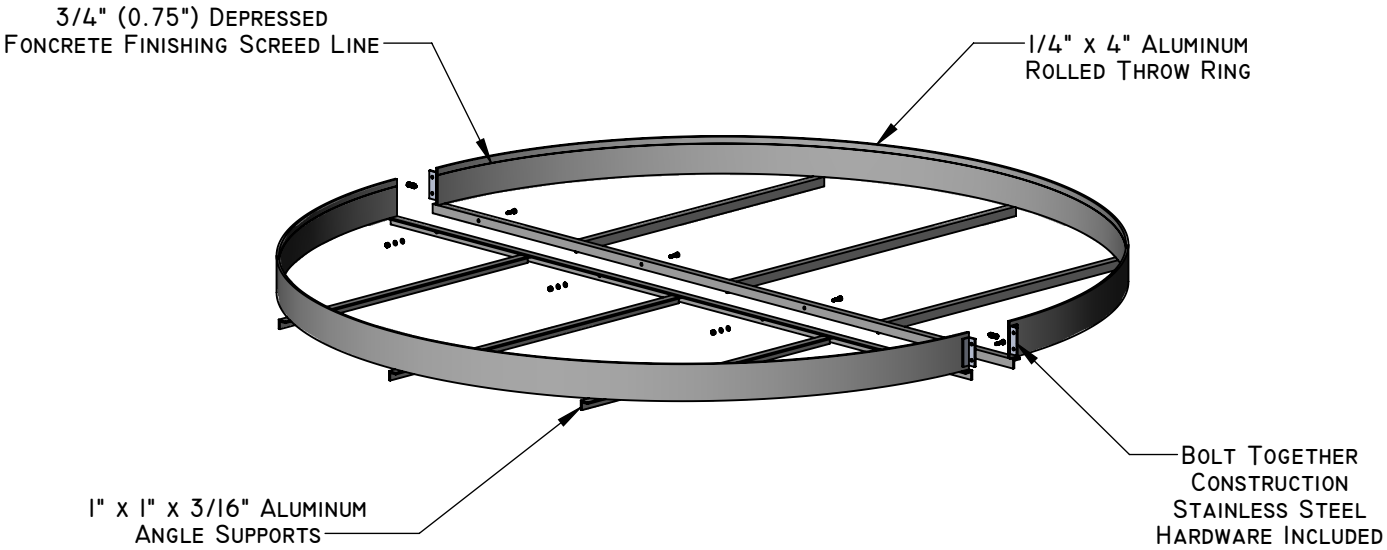

PROPRIETARY AND CONFIDENTIAL
THE INFORMATION CONTAINED IN THIS DRAWING IS THE SOLE PROPERTY OF SPORTSFIELD SPECIALTIES INC. ANY REPRODUCTION IN PART OR AS A WHOLE WITHOUT THE WRITTEN PERMISSION OF SPORTSFIELD SPECIALTIES INC. IS PROHIBITED.

TFSWRING
Shot Put/Hammer Web Reinforced Throw Ring

Not To Scale

Sportsfield Specialties Inc 12112014

TFSWRING Webbed Shot Put/Hammer Throw Ring

SECTION 11480 Athletic Equipment - Field

PART 1 GENERAL

1.01 WORK INCLUDED

A. Provide all equipment and materials, and do all work necessary to furnish and install the athletic equipment, as indicated on the drawings and as specified herein. Athletic equipment shall include, but not be limited to:

1. TFSWRING Webbed Shot Put/Hammer Throw Ring

1.02 RELATED WORK

A. Examine contract documents for requirements that affect work of this section. Other specification sections that directly relate to the work of this section include, but are not limited to:

1. Section 02200 – Earthwork; Excavation and Backfill and establishment of sub-grade elevations.
2. Section 02511 – Asphalt, Concrete, and Pavement
3. Section 02535 – Synthetic Track Surfacing
4. Section 02542 – Synthetic Field Surfacing
5. Section 03300 – Cast-in-Place Concrete

1.03 REFERENCES

A. Comply with applicable requirements of the following standards. Where these standards conflict with other specified requirements, the most restrictive requirements shall govern.

1. National Federation of State High School Associations (NFHS)
2. National Collegiate Athletic Association (NCAA)
3. International Amateur Athletic Association (IAAF)
4. American Sports Builders Association (ASBA)
5. Manufacturers Data and Recommended Installation Requirements

1.04 SUBMITTALS

A. Manufacturers Product Data

1. Provide manufacturers product data prior to actual field installation work, for Architects or Owners representatives

review.

B. Shop Drawings

1. Provide drawings of the manufacturers recommended installation and foundation requirements prior to actual field installation work, for Architects or Owners representatives review.

1.05 QUALITY ASSURANCE

A. Manufacturers warranties shall pass to the Owner and certification made that the product materials meet all applicable grade trademarks or conform to industry standards and inspection requirements.

1.06 PRODUCT DELIVERY AND STORAGE

A. Materials delivered to the site shall be examined for damage or defects in shipping. Any defects shall be noted and reported to the Owners representative. Replacements, if necessary, shall be immediately re-ordered, so as to minimize any conflict with the construction schedule. Sound materials shall be stored above ground under protective cover or indoors so as to provide proper protection.

PART 2 PRODUCTS

2.01 Webbed Shot Put/Hammer Throw Ring

A. BASE: TFSWRING Webbed Shot Putt/Hammer Throw Ring as manufactured by:

Sportsfield Specialties Inc.
P.O. Box 231
41155 State Highway 10
Delhi, NY 13753
p. 888-975-3343
f. 607-746-8481

B. COMPONENTS:

1. TFSWRING fabricated with 2.0in x 2.0in x .25in Aluminum Angle, 84.0in Diameter, having the following attributes:
   A. Aluminum Web Reinforcement

PART 3 EXECUTION

3.01 INSTALLATION OF EQUIPMENT

A. All athletic equipment shall be installed as recommended with manufacturer's written directions, and as indicated on the drawings.

END OF SECTION

DESIGNED TO MEET THE DEMANDS
OF MODERN SPORTS CONSTRUCTION

41155 ST. HWY 10
PO BOX 231
DELHI, NY 13753
TOLL FREE: 888-975-3343
FAX: 607-746-8481

FieldTurf USA Inc

SPORTSFIELD SPECIALTIES
WWW.SPORTSFIELDSPECIALTIES.COM

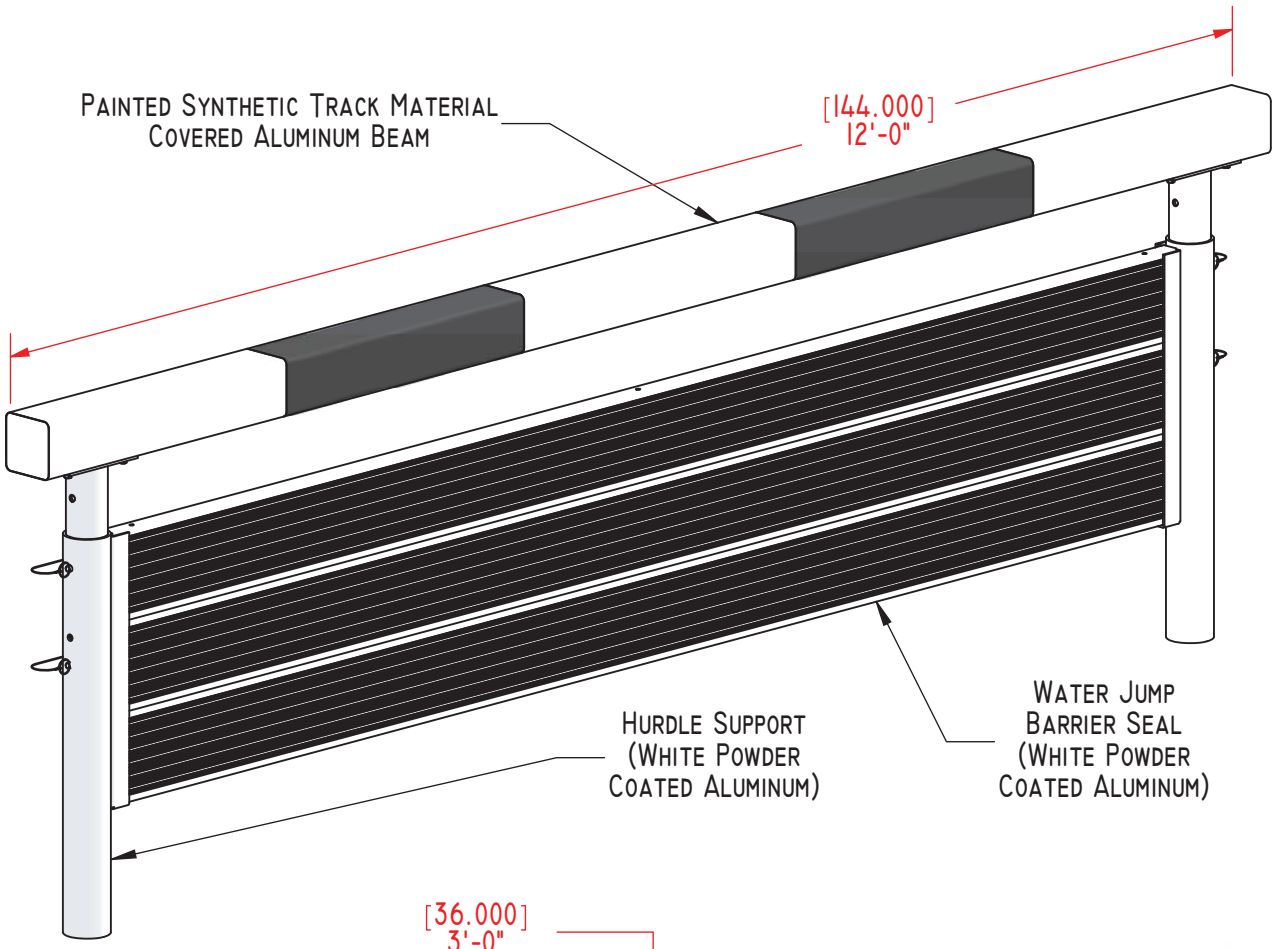

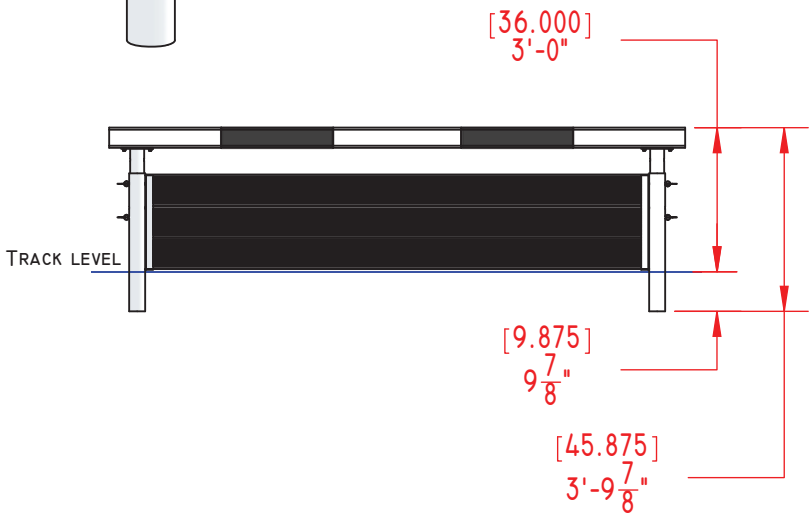

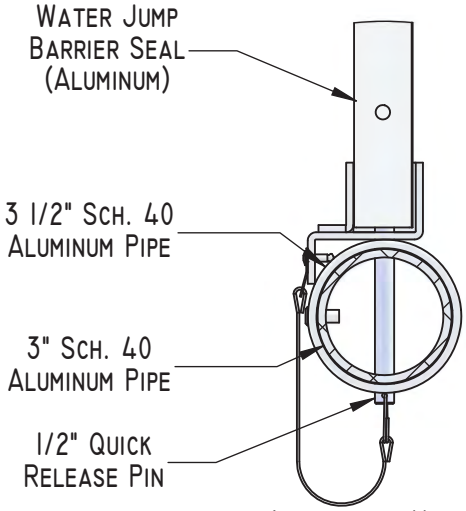

Adjustable Upright Detail

Note: Optional school name/logo on hurdle or sleeves for additional cost.

PROPRIETARY AND CONFIDENTIAL
THE INFORMATION CONTAINED IN THIS DRAWING IS THE SOLE PROPERTY OF SPORTSFIELD SPECIALTIES INC. ANY REPRODUCTION IN PART OR AS A WHOLE WITHOUT THE WRITTEN PERMISSION OF SPORTSFIELD SPECIALTIES INC. IS PROHIBITED.

Adjustable Steeple Chase Hurdle
WJ5020 Plan View - Men's Position

Not To Scale

Sportsfield Specialties Inc 11012014

DESIGNED TO MEET THE DEMANDS
OF MODERN SPORTS CONSTRUCTION

41155 ST. HWY 10
PO BOX 231
DELHI, NY 13753
TOLL FREE: 888-975-3343
FAX: 607-746-8481

FieldTurf USA Inc

SPORTSFIELD SPECIALTIES
WWW.SPORTSFIELDSPECIALTIES.COM

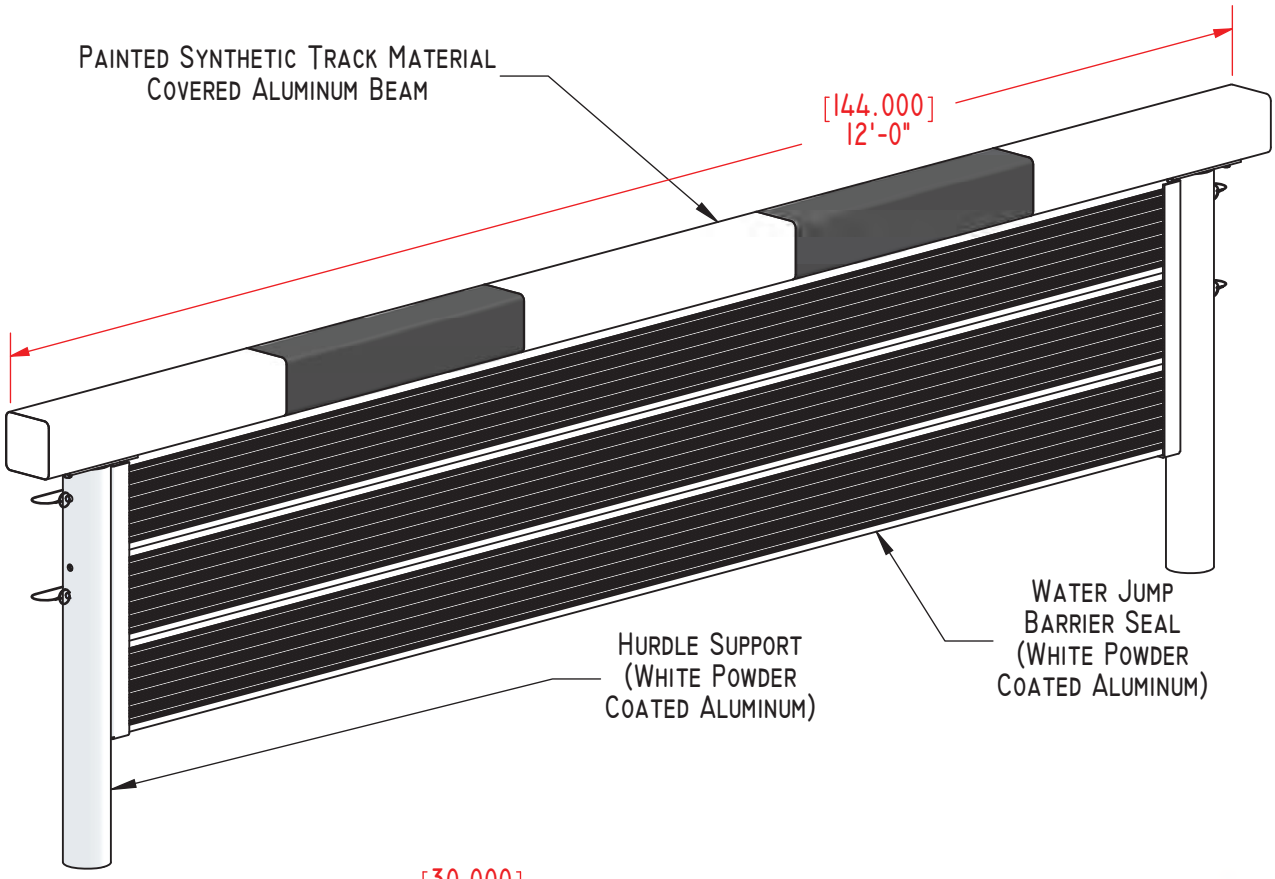

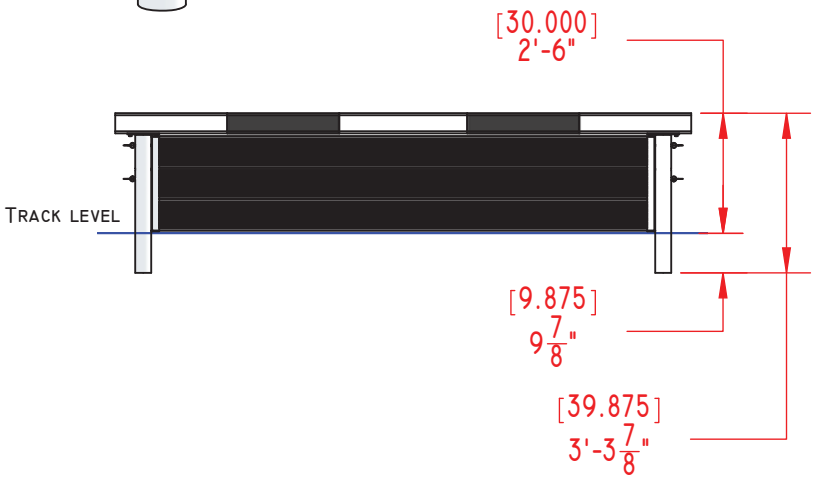

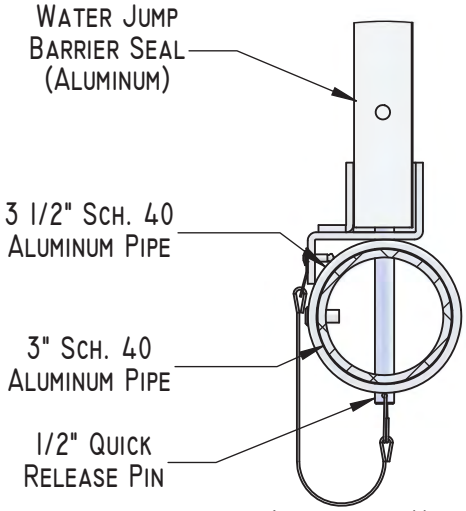

Adjustable Upright Detail

Note: Optional school name/logo on hurdle or sleeves for additional cost.

PROPRIETARY AND CONFIDENTIAL
THE INFORMATION CONTAINED IN THIS DRAWING IS THE SOLE PROPERTY OF SPORTSFIELD SPECIALTIES INC. ANY REPRODUCTION IN PART OR AS A WHOLE WITHOUT THE WRITTEN PERMISSION OF SPORTSFIELD SPECIALTIES INC. IS PROHIBITED.

Adjustable Steeple Chase Hurdle
WJ5020 Plan View - Women's Position

Not To Scale

Sportsfield Specialties Inc 11012014

DESIGNED TO MEET THE DEMANDS
OF MODERN SPORTS CONSTRUCTION

41155 ST. HWY 10
PO BOX 231
DELHI, NY 13753
TOLL FREE: 888-975-3343
FAX: 607-746-8481

FieldTurf USA Inc

SPORTSFIELD SPECIALTIES
WWW.SPORTSFIELDSPECIALTIES.COM

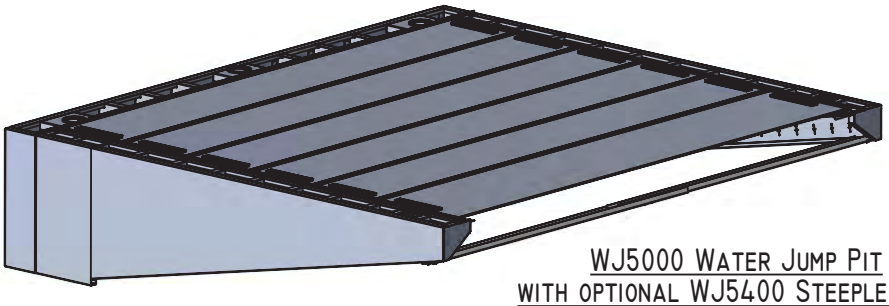

WJ5000 Water Jump Pit
with optional WJ5400 Steeplechase
Cover Set

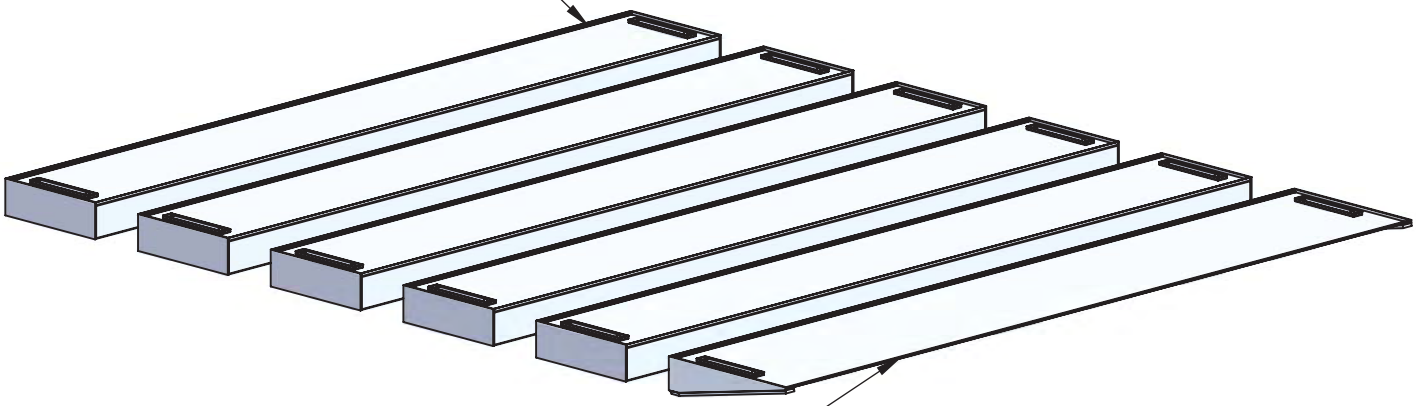

PROPRIETARY AND CONFIDENTIAL
THE INFORMATION CONTAINED IN THIS DRAWING IS THE SOLE PROPERTY OF SPORTSFIELD SPECIALTIES INC. ANY REPRODUCTION IN PART OR AS A WHOLE WITHOUT THE WRITTEN PERMISSION OF SPORTSFIELD SPECIALTIES INC. IS PROHIBITED.

WJ5400 Steeplechase Water jump Pit Panel Cover Set

Not To Scale | Product Weight: 540 lbs. | Sportsfield Specialties Inc 11012014

TFLTP012SS International 12" Long/Triple Jump Take-Off Board

SECTION 11480 Athletic Equipment - Track & Field

PART 1 GENERAL

1.01 WORK INCLUDED

A. Provide all equipment and materials, and do all work necessary to furnish and install the athletic equipment, as indicated on the drawings and as specified herein. Athletic equipment shall include, but not be limited to:

1. TFLTP012SS International 12" Take-Off Board

1.02 RELATED WORK

A. Examine contract documents for requirements that affect work of this section. Other specification sections that directly relate to the work of this section include, but are not limited to:

1. Section 02200 – Earthwork; Excavation and Backfill and establishment of sub-grade elevations.
2. Section 02511 – Asphalt, Concrete, and Pavement
3. Section 02535 – Synthetic Track Surfacing
4. Section 02542 – Synthetic Field Surfacing
5. Section 03300 – Cast-in-Place Concrete

1.03 REFERENCES

A. Comply with applicable requirements of the following standards. Where these standards conflict with other specified requirements, the most restrictive requirements shall govern.

1. National Federation of State High School Associations (NFHS)
2. National Collegiate Athletic Association (NCAA)
3. International Amateur Athletic Association (IAAF)
4. American Sports Builders Association (ASBA)
5. American Wood Preserver's Association (AWPA)
6. Manufacturers Data and Recommended Installation Requirements

1.04 SUBMITTALS

A. Manufacturers Product Data

1. Provide manufacturers product data prior to actual field

installation work, for Architects or Owners representatives review.

B. Shop Drawings

1. Provide drawings of the manufacturers recommended installation and foundation requirements prior to actual field installation work, for Architects or Owners representatives review.

1.05 QUALITY ASSURANCE

A. Manufacturers warranties shall pass to the Owner and certification made that the product materials meet all applicable grade trademarks or conform to industry standards and inspection requirements.

1.06 PRODUCT DELIVERY AND STORAGE

A. Materials delivered to the site shall be examined for damage or defects in shipping. Any defects shall be noted and reported to the Owners representative. Replacements, if necessary, shall be immediately re-ordered, so as to minimize any conflict with the construction schedule. Sound materials shall be stored above ground under protective cover or indoors so as to provide proper protection.

PART 2 PRODUCTS

2.01 International 12" Long/Triple Jump Take-Off Board

A. BASE: TFLTP012SS International 12" Take-Off Board as manufactured by:

Sportsfield Specialties Inc.
P.O. Box 231
41155 State Highway 10
Delhi, NY 13753
p. 888-975-3343
f. 607-746-8481

B. COMPONENTS:

1. International Model # TFLT012SS, 12.0in 16 Gauge Stainless Steel Tray, with Stainless Steel insert containing double surface support, 0.75in White Synthetic Polyboard Board, 0.75in Yellow Synthetic Polyboard Foul Strip, Lift Handles for Insert Removal, Stainless Steel

Adjustment Bolts, and 2 lbs of 'Jolly King' Plasticene. Overall Dimensions: 2.81in x 12.0in x 48.0in

PART 3 EXECUTION

3.01 INSTALLATION OF EQUIPMENT

A. All athletic equipment shall be installed as recommended with manufacturer's written directions, and as indicated on the drawings.

END OF SECTION

DESIGNED TO MEET THE DEMANDS
OF MODERN SPORTS CONSTRUCTION

41155 ST. HWY 10
PO BOX 231
DELHI, NY 13753
TOLL FREE: 888-975-3343
FAX: 607-746-8481

FieldTurf USA Inc

SPORTSFIELD SPECIALTIES
WWW.SPORTSFIELDSPECIALTIES.COM

UNITED STATES PATENT # 8,337,318, ISSUED DECEMBER 25, 2012

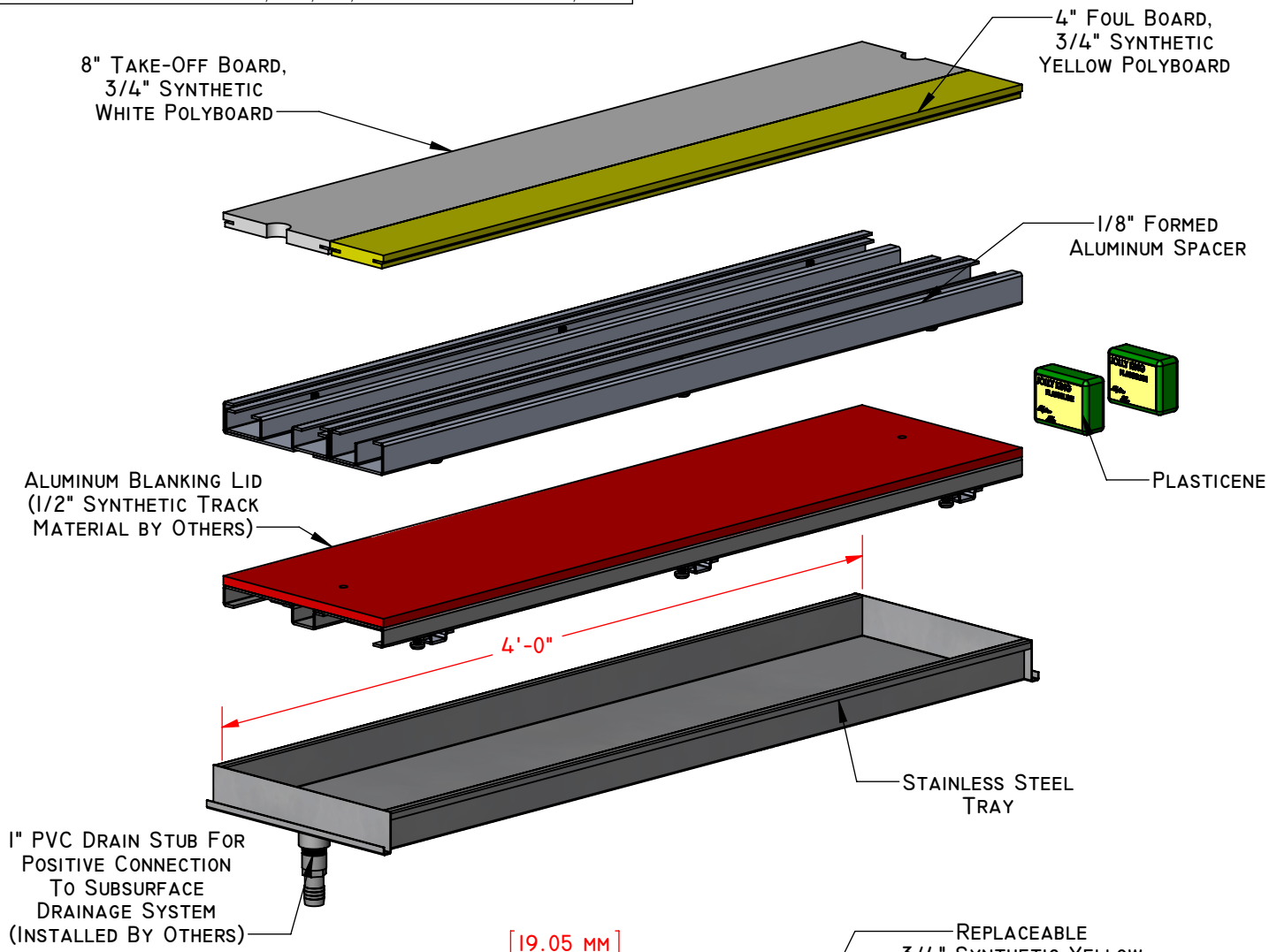

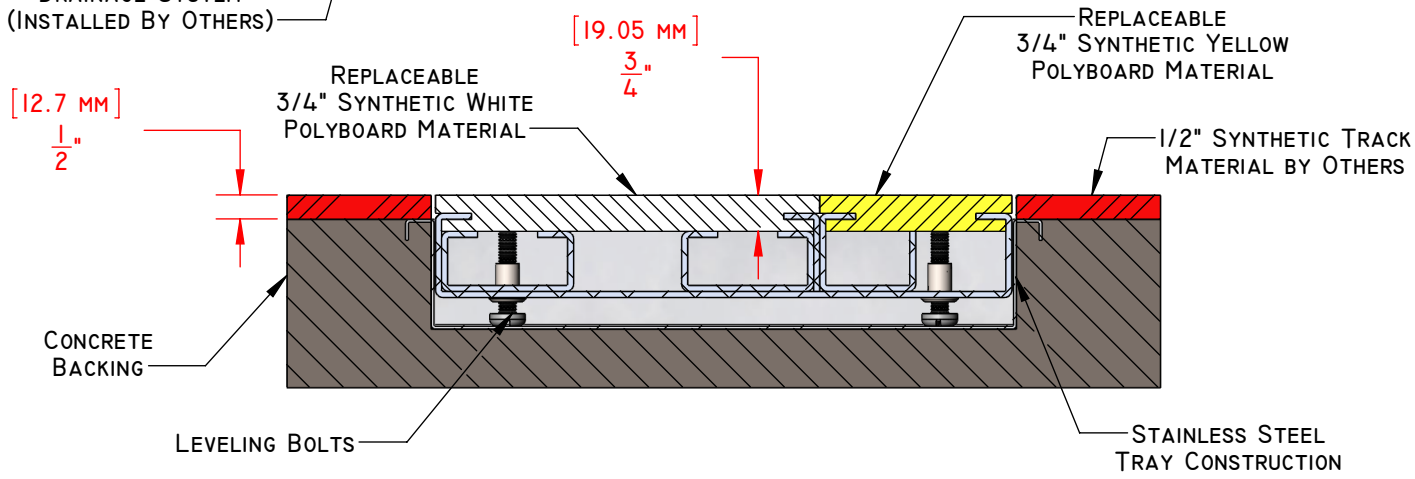

PROPRIETARY AND CONFIDENTIAL
THE INFORMATION CONTAINED IN THIS DRAWING IS THE SOLE PROPERTY OF SPORTSFIELD SPECIALTIES INC. ANY REPRODUCTION IN PART OR AS A WHOLE WITHOUT THE WRITTEN PERMISSION OF SPORTSFIELD SPECIALTIES INC. IS PROHIBITED.

TFLTP012SS-SYN - 12" LONG/TRIPLE JUMP TAKE-OFF BOARD SYSTEM WITH REPLACEMENT BLANKING LID

NOT TO SCALE

SPORTSFIELD SPECIALTIES INC 02272015

DESIGNED TO MEET THE DEMANDS
OF MODERN SPORTS CONSTRUCTION

41155 St. Hwy 10
PO Box 231
Delhi, NY 13753
Toll Free: 888-975-3343
Fax: 607-746-8481

FieldTurf USA Inc

SPORTSFIELD SPECIALTIES
WWW.SPORTSFIELDSPECIALTIES.COM

Set Includes All Hardware and Two (2) Post Caps

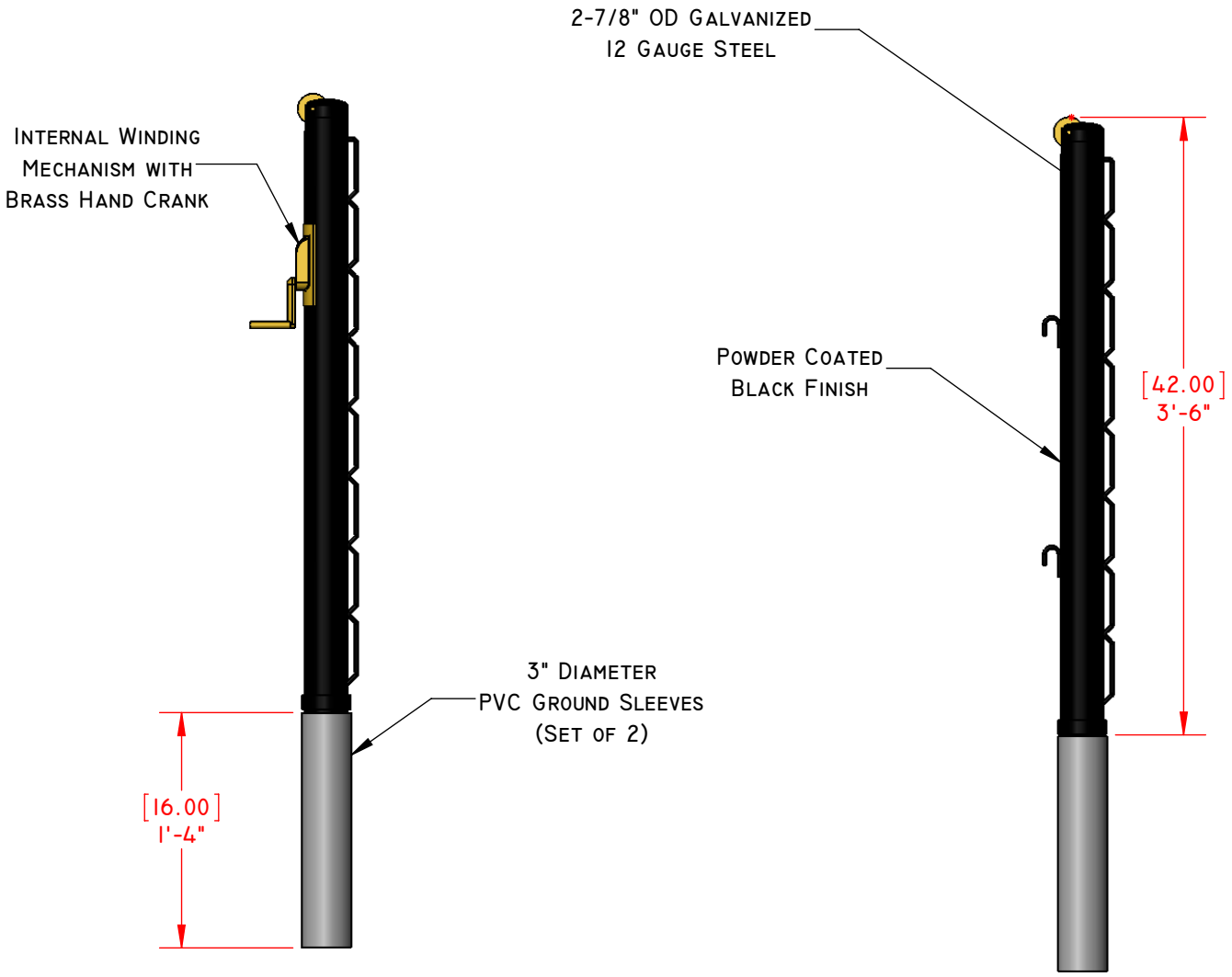

Accessories Included:
- Removable Brass Hand Crank
- TPGS Post Ground Sleeves
- TN Net
- TNS Net Strap
- TNA Net Anchor

PROPRIETARY AND CONFIDENTIAL
THE INFORMATION CONTAINED IN THIS DRAWING IS THE SOLE PROPERTY OF SPORTSFIELD SPECIALTIES INC. ANY REPRODUCTION IN PART OR AS A WHOLE WITHOUT THE WRITTEN PERMISSION OF SPORTSFIELD SPECIALTIES INC. IS PROHIBITED.

TSIB Internal Wind Tennis System

Not To Scale

Sportsfield Specialties Inc 08182015

DESIGNED TO MEET THE DEMANDS
OF MODERN SPORTS CONSTRUCTION

41155 ST. HWY 10
PO BOX 231
DELHI, NY 13753
TOLL FREE: 888-975-3343
FAX: 607-746-8481

SPORTSFIELD SPECIALTIES
WWW.SPORTSFIELDSPECIALTIES.COM

FieldTurf USA Inc

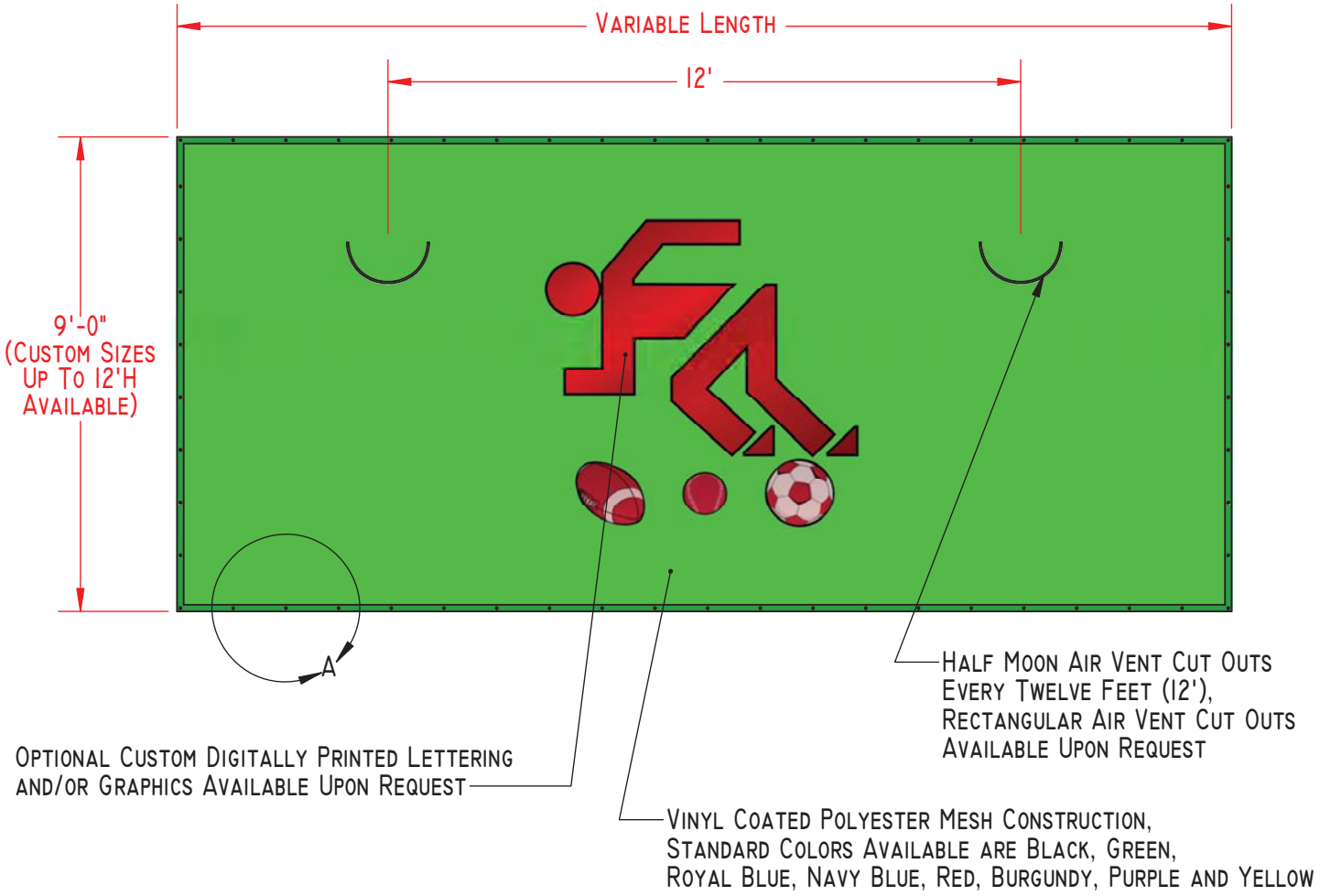

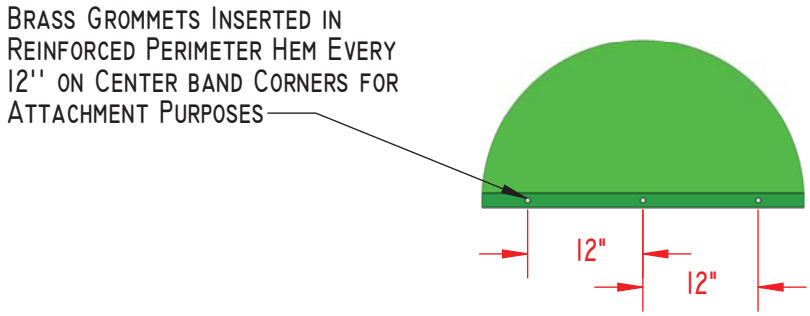

DETAIL A
SCALE 1 : 20

STANDARD PART NUMBERS:

VCP9 - WINDSCREEN 9'H x VARIABLE LENGTH
VCP9-CUSTOM - CUSTOM WINDSCREEN SIZES UP TO 12'H x VARIABLE LENGTH
WDIGITAL - OPTIONAL DIGITALLY PRINTED GRAPHICS AND/OR LETTERING

PROPRIETARY AND CONFIDENTIAL
THE INFORMATION CONTAINED IN THIS DRAWING IS THE SOLE PROPERTY OF SPORTSFIELD SPECIALTIES INC. ANY REPRODUCTION IN PART OR AS A WHOLE WITHOUT THE WRITTEN PERMISSION OF SPORTSFIELD SPECIALTIES INC. IS PROHIBITED.

VCP9 9'H VINYL COATED POLYESTER MESH WINDSCREEN MATERIAL

NOT TO SCALE

SPORTSFIELD SPECIALTIES INC 11012014

DESIGNED TO MEET THE DEMANDS
OF MODERN SPORTS CONSTRUCTION

41155 St. Hwy 10
PO Box 231
Delhi, NY 13753
Toll Free: 888-975-3343
Fax: 607-746-8481

FieldTurf USA Inc

SPORTSFIELD SPECIALTIES

WWW.SPORTSFIELDSPECIALTIES.COM

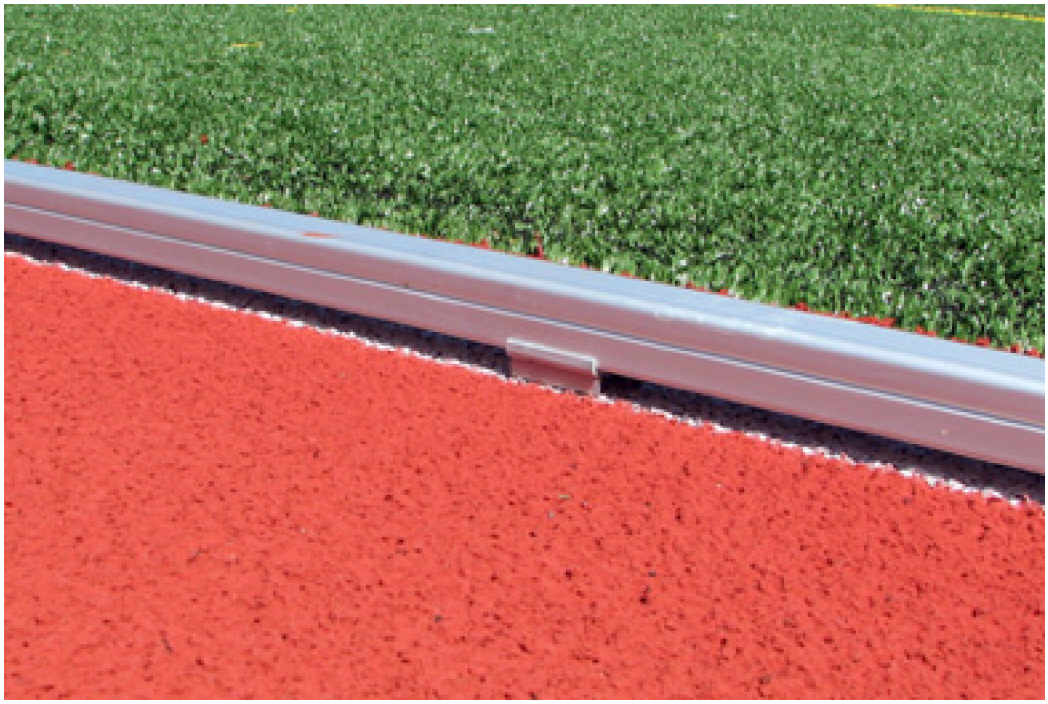

Made from Two inch Square (2" x 2") heavy Gauge Aluminum Tube

Sections Measure Twenty Feet (20') in Length and are Numbered for Ease of installation

Form Fitted and Manufactured to Exact Track Specifications From Provided Project Layout Drawings and information, *REQUIRED-BY OTHERS*

Curbing Splits 1/2" Above Synthetic Track Surface on Anchor Clips For Efficient Drainage

Aluminum Finish is Silver or Gold Anodized (Electroplated)

IAAF, NCAA, and USATF Rules Compliant

PROPRIETARY AND CONFIDENTIAL
THE INFORMATION CONTAINED IN THIS DRAWING IS THE SOLE PROPERTY OF SPORTSFIELD SPECIALTIES INC. ANY REPRODUCTION IN PART OR AS A WHOLE WITHOUT THE WRITTEN PERMISSION OF SPORTSFIELD SPECIALTIES INC. IS PROHIBITED.

TF852A - Gill Athletics Anodized Aluminum Track Curb

Not To Scale

Sportsfield Specialties Inc 07262012

Soccer Goal with Optional Mobility Kit Installation Notes

SG824R (SG4950), SG721R, SG618R

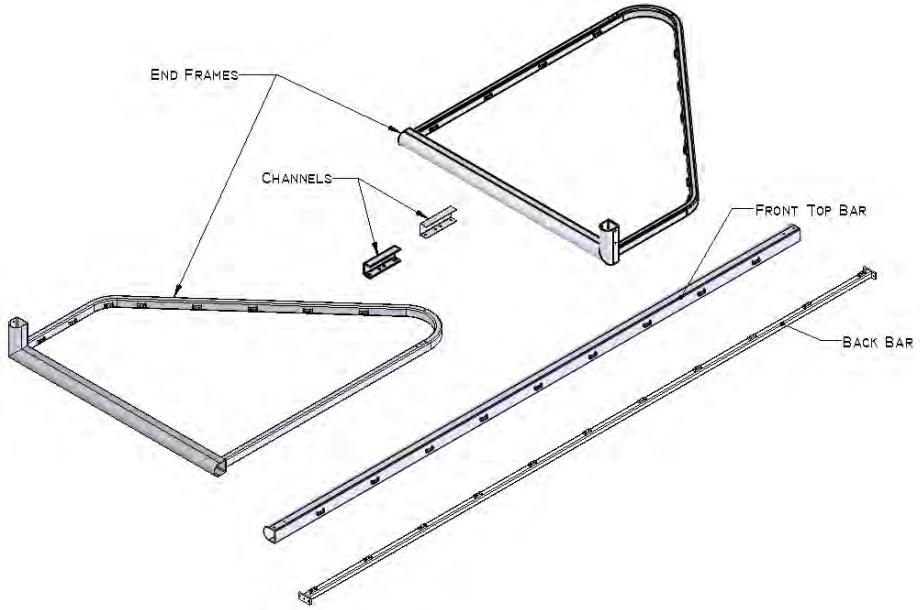

Figure 1

1. Begin by laying out all of the soccer goal components. Place the end frames far enough apart to fit the top crossbar between them with the net clips facing outwards. Place one channel at each connection. (Fig. 1).

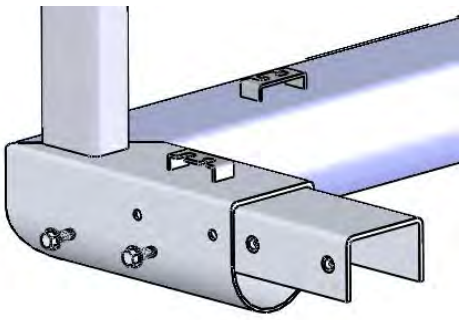

Figure 2A

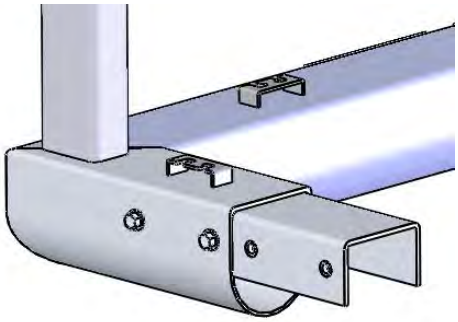

Figure 2B

2. Use (2) 3/8" – 16 x 1" serrated hex bolts to attach the top bar channel to the inside of each end frame (Figs. 2A & 2B). **Note: Do not tighten hardware until all bolts are in place.**

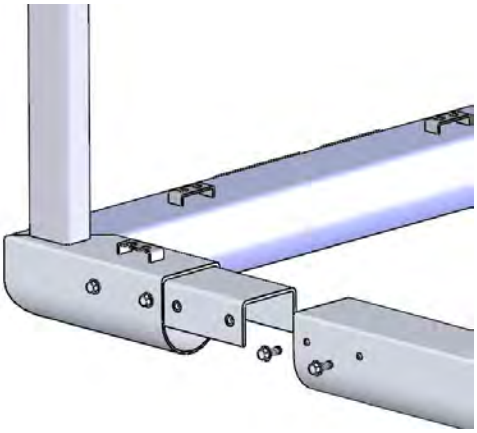

Figure 3A

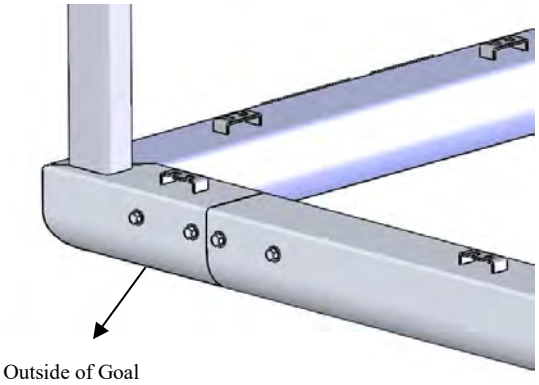

Figure 3B

3. Connect the end frames to the crossbar by sliding the crossbar over the channel (Fig. 3A), confirm all net clips are facing toward the outside of the goal. Use (2) 3/8" – 16 x 1" serrated hex bolts to attach the crossbar to each end frame (Fig. 3B). Tighten all hardware.

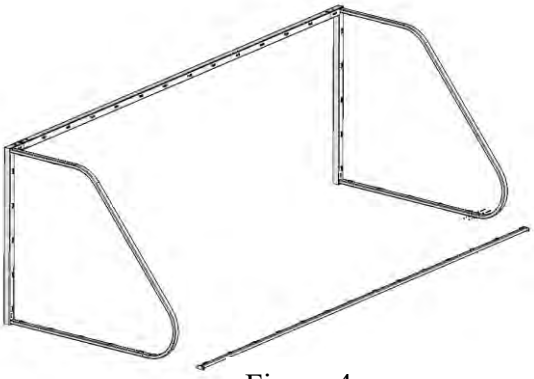

Figure 4

4. Before attaching the ground bar to the goal, carefully flip the goal into the proper position by lifting up on both ends of the crossbar. Place the ground bar between the two end frames (Fig. 4).

5. Attach the ground bar to the end frames with (2) 3/8"-16 x 4-1/2" bolts, (4) 3/8" flat washers, (1) 4952 (Frame Plate), (2) 3/8" lock washers, and (2) 3/8"-16 hex nuts. Verify the net clips are facing toward the outside of the goal. If football and soccer share an end line, position the ground bar on the inside holes. If soccer and football each have their own end line, position the ground bar on the outside holes. Tighten all hardware (Fig. 5).

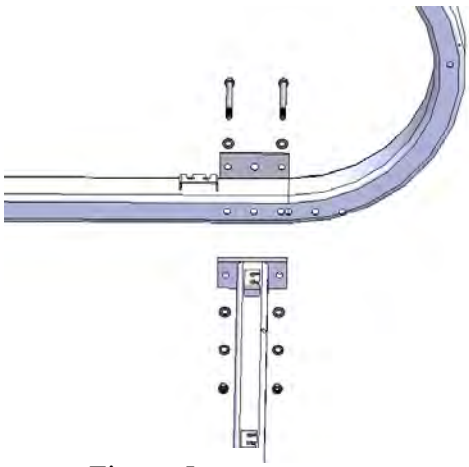

Figure 5

6. With the goal now fully assembled, place the net flat on the ground and locate the corners of the net. Locate the centerline of the bound edge that will be attached to the crossbar. The centerline of the binding will be attached to the centerline clip of the crossbar. Lay the soccer goal down on its face, attach the net by first pushing the outer binding through the clip, then securing in the groove (Fig. 6). Start in the middle of the goal and attach every other clip, and then go back through and attach the remaining clips. Once clipped, apply weight to the clipped net to stretch material. Next, work down both uprights and then back around the End Frame. Follow the same procedure used for the crossbar. Finish by attaching the net to the Ground Bar.

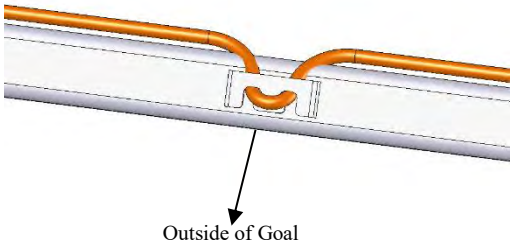

Figure 6

7. Install the goal strap from the inside of the goal. Route the strap through the goal clip as shown below (Figure 7) and loop the strap around the goal frame securing the strap to itself. Stretch the goal strap to the other side of the goal and attach as previously done.

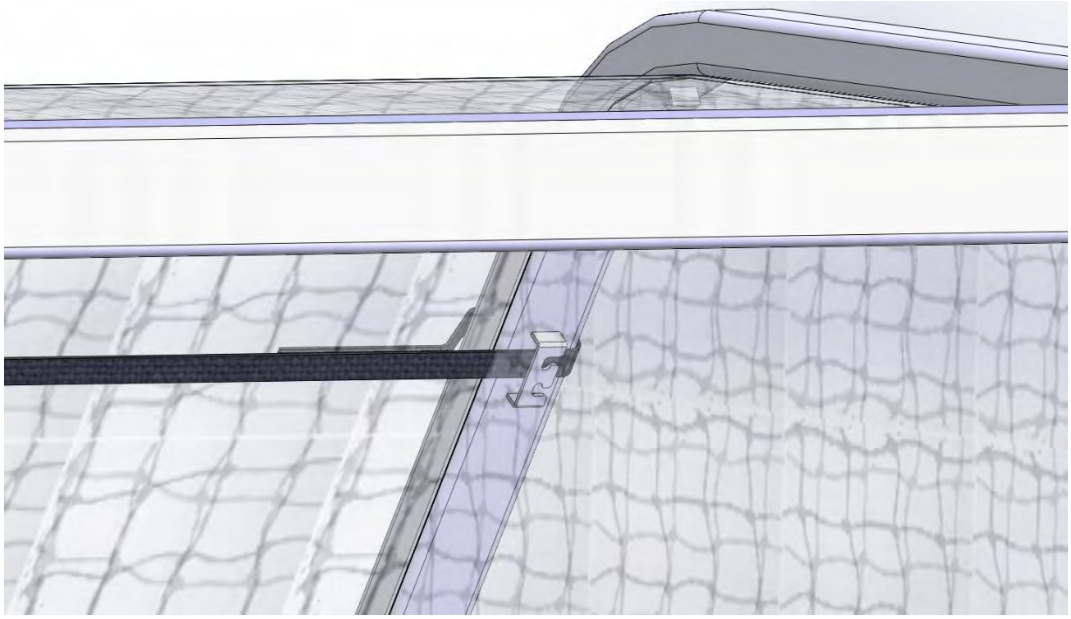

Figure 7

- Standard Installation Complete –

SPORTSFIELD SPECIALTIES
WWW.SPORTSFIELDSPECIALTIES.COM

Excellence from Design to Installation
41155 State Highway 10, PO Box 231, Delhi, NY 13753 CALL: 888-975-3343 FAX: 607-746-8481

Optional Equipment:
SGMobile® Integrated Soccer Goal Wheel Kit - SGMKR
Soccer Goal Safety System - SG2S®
United States Patent #7,331,880, Issued February 19, 2008
United States Patent #7,527,569, Issued May 5, 2009
United States Patent #8,777,784, Issued July 15, 2014

Meets and exceeds ASTM F2950-14 Standard Safety and Performance Specification for Soccer Goals and ASTM F1938-98 Standard Guide for Safer Use of Movable Soccer Goals

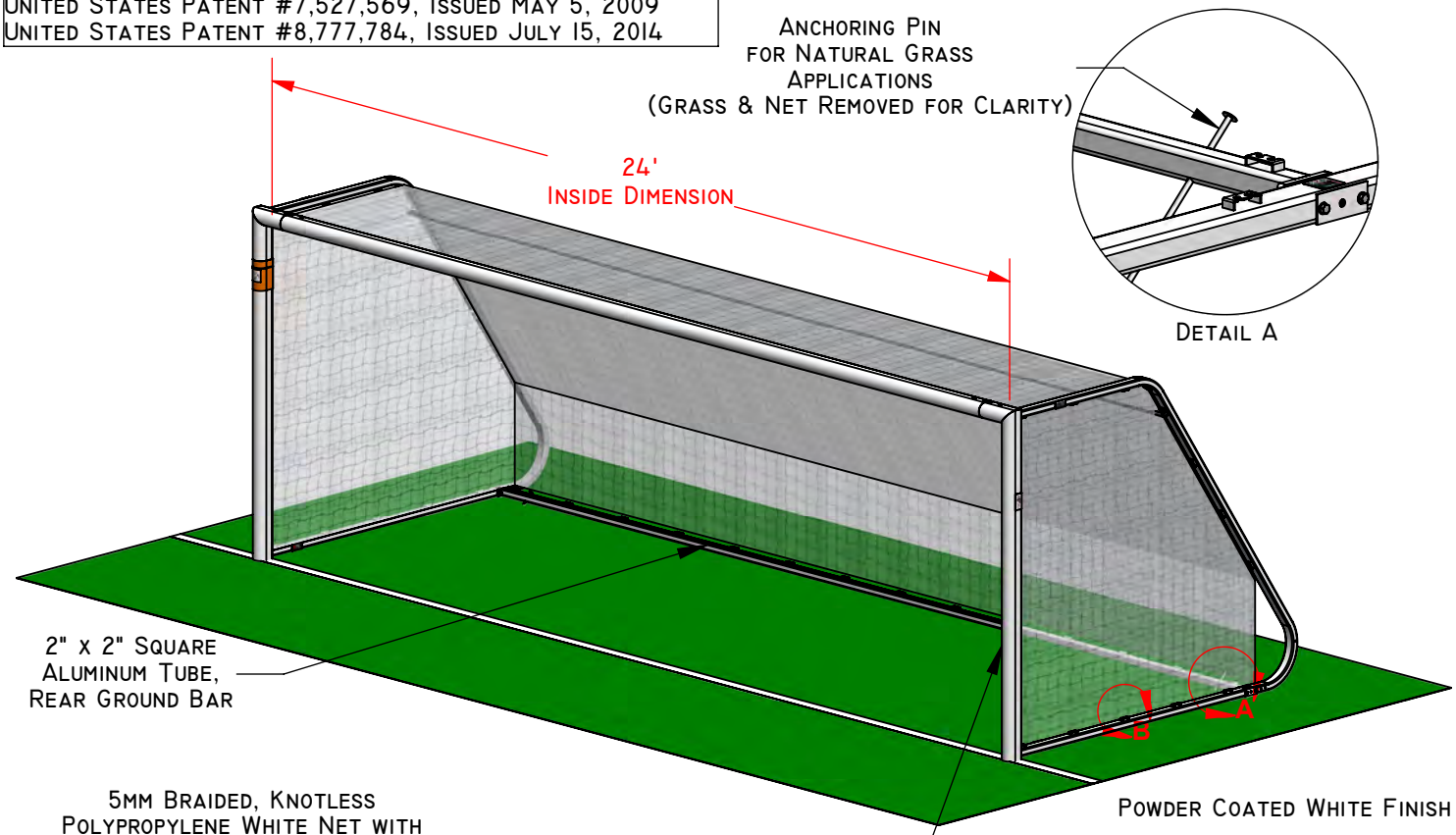

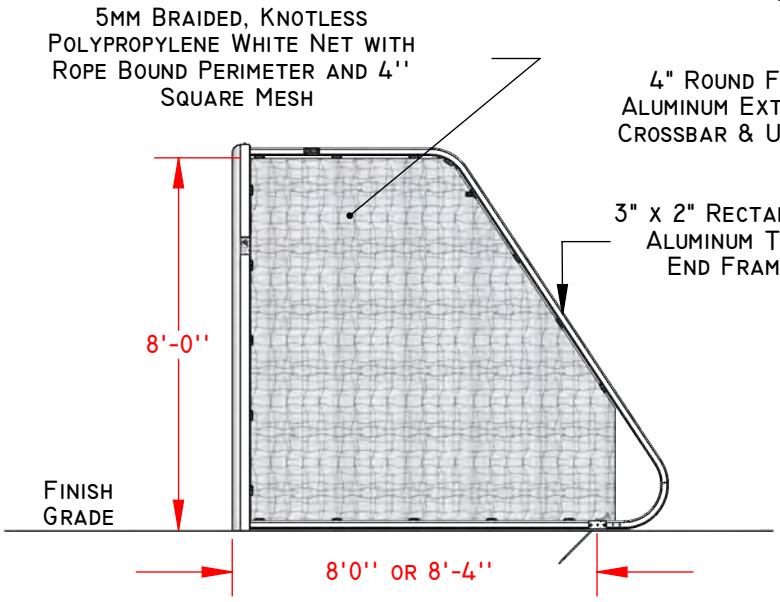

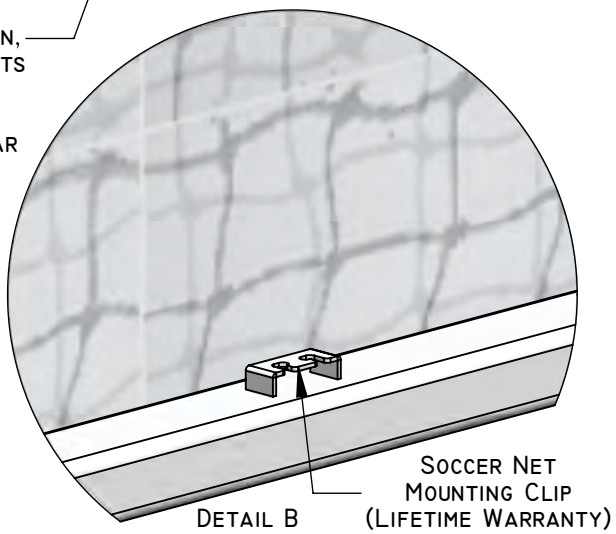

PROPRIETARY AND CONFIDENTIAL
THE INFORMATION CONTAINED IN THIS DRAWING IS THE SOLE PROPERTY OF SPORTSFIELD SPECIALTIES INC. ANY REPRODUCTION IN PART OR AS A WHOLE WITHOUT THE WRITTEN PERMISSION OF SPORTSFIELD SPECIALTIES INC. IS PROHIBITED.

SG824R (SG4950) 8' x 24' Regulation Size Round Faced Soccer Goal

Not To Scale

Sportsfield Specialties Inc 08202018

8. THIS STEP IS FOR NATURAL GRASS SYSTEMS ONLY. The final step is to anchor the goal to the ground preventing it from moving and/or tipping over. Put the goal into position and install the natural grass anchor system consisting of two (2) anchor pins. Drive the anchor pins through holes in the back bar and into the ground (Fig. 8).

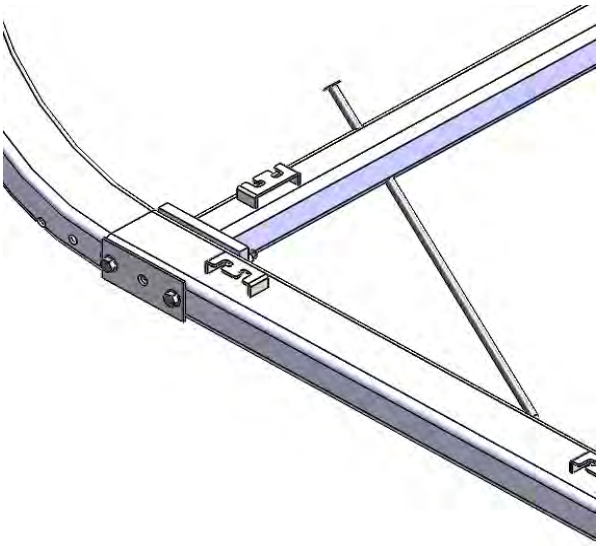

Figure 8

****FOR IN-FILL TURF ANCHORING, PLEASE ASK US ABOUT OUR PATENTED SG2S™ AND FOR NATURAL GRASS, OUR SG2SNG SOCCER GOAL SAFETY SYSTEM**

United States Patent #7,331,880 – Issued February 19, 2008
United States Patent #7,527,569 – Issued May 5, 2009

Optional Mobility Kit

Tools Required

The following tools will be required to install the Mobility Kit:
-Adjustable Wrench
-Needle Nose Pliers
-Full set of Allen Wrenches

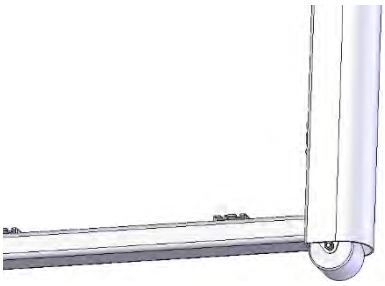

Figure 1 – SGMKR Mobility Kit

Items Provided

Verify that the following items are included with the Mobility Kit you received:
- (2) Roller/Tube Assemblies (Fig. 3)
- (2) Ring clips pre-assembled to hold in pull pin (Fig. 4)
- (2) Handles with hardware (Fig. 2)

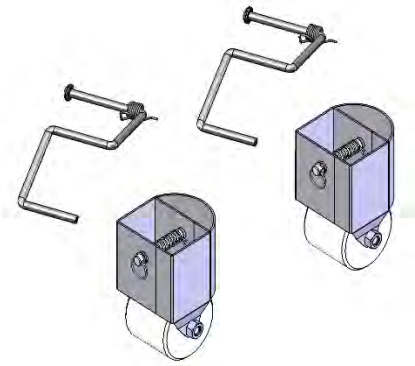

Figure 2 – Mobility Parts

Install Process

1. Remove rollers from the support tube assembly by removing the bolt, nut, and washer; retain these for re-assembly later. Also remove the ring clip from the pull pin and set aside for re-assembly.

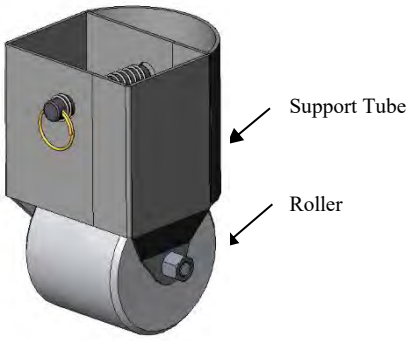

Figure 3 – Roller/Tube Assembly

2. Insert the tube assembly, **<u>without the roller or pull pin assembly,</u>** into the bottom of the front goal post. Line up with the lower hole, then, by reaching your hand up through the tube assembly, reinsert the spring loaded pull pin assembly. Locate the hole in the pin towards the rear of the soccer goal front post washer and spring remain in the proper position on the slide assembly). This will allow the stainless steel pull pin to extend past the front post exposing a hole for the previously removed ring clip (Fig 5).

Figure 4 – Locating Pin in Tube Assembly

3. With the pin in place, re-insert the ring clip into the hole by rotating it into position. Once the clip is in place, release the assembly allowing the tube assembly to lock into place in the front post.

4. Re-assemble the roller and tube assembly using the hardware removed in Step 1.

5. Assemble the supplied handles to the end frame using (2) nylon washers, springs, and 3/8" push caps. Install the handle in the hole provided on the Soccer goal end frame (Figs. 6 & 7).

6. Duplicate Steps 1 through 5 for the opposite end frame.

7. With both sides of the soccer goal complete, the rollers can be moved up or down simply by pulling the ring clip and pin outward and sliding the entire roller/tube assembly either up or down in the slot (Fig. 5). Please make sure that all weight has been removed from the assembly prior to changing locations.

8. Using the handles, two can easily pull the goal to its playing location or storage area.
IMPORTANT: The rollers should always be in the up position while in storage or while in use for game or practice.

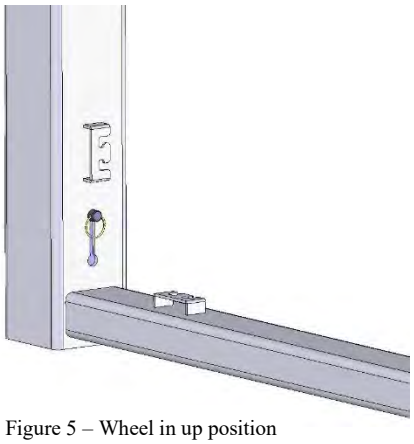

Figure 5 – Wheel in up position

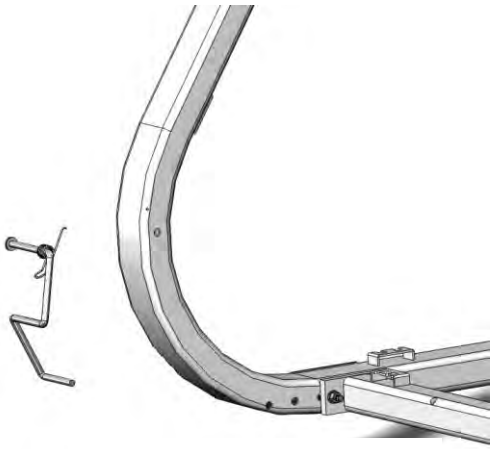

Figure 6 – Handle & end frame

Figure 7 – Handle on end frame

SEE NEXT PAGE FOR VALUABLE SAFETY TIPS RELATED TO PORTABLE SOCCER GOALS

Soccer Goal Safety Tips

* Securely anchor, with pins and/or counterweights, movable soccer goals at ALL times.

* Anchor or chain goals together, to themselves in a folded down position, or to a nearby fence post, dugout, or any other sturdy structure when not in use. If this is not practical, store movable soccer goals in a place where children will not have access to them.

* Remove nets when goals are not in use.

* Verify structural integrity and check for secure connecting hardware before every use. Replace damaged or missing parts and/or fasteners immediately.

* NEVER allow anyone to climb on the net or goal framework.

* Ensure safety/warning labels are clearly visible (placed under the crossbar and on the sides of the front-posts at eye level).

* Fully disassemble goals for seasonal storage.

* Exercise extreme caution and provide adequate manpower when moving goals. Only authorized and properly trained personnel should move soccer goals.

* Always instruct players regarding the safe handling of and the potential dangers associated with movable soccer goals.

* Movable soccer goals should only be used on LEVEL (flat) fields.

SPORTSFIELD SPECIALTIES
WWW.SPORTSFIELDSPECIALTIES.COM
Excellence from Design to Installation
41155 State Highway 10, PO Box 231, Delhi, NY 13753 CALL: 888-975-3343 FAX: 607-746-8481

Base Plate Mounted and/or Custom Size Layouts Available

Standard Black Powder Coated Finish

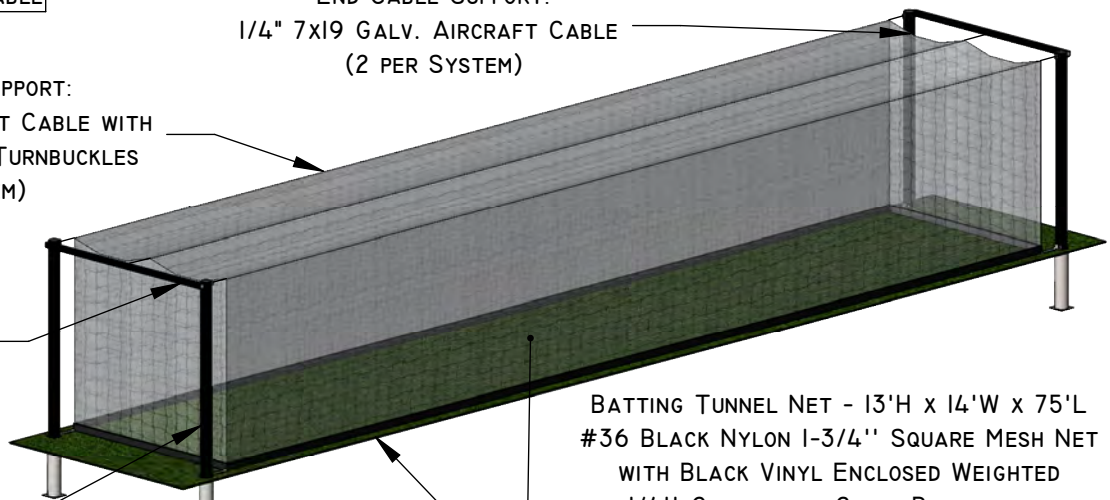

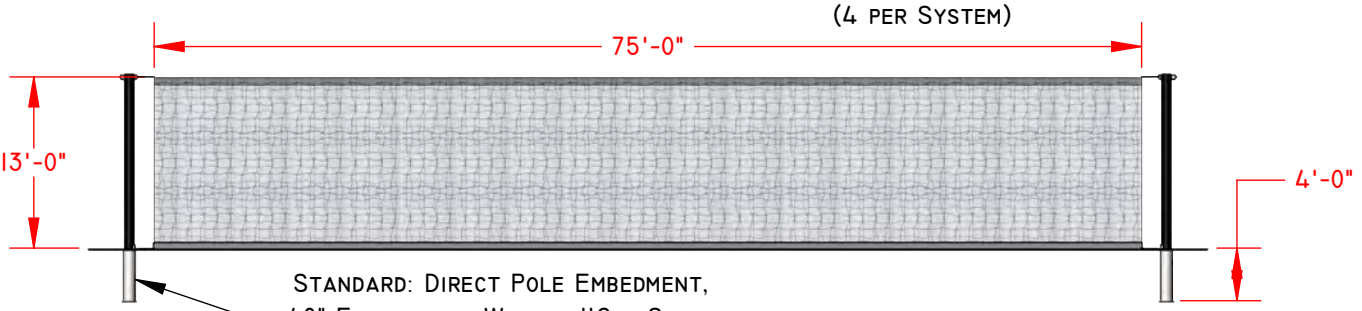

Foundation Requirements Based on Local Codes and Soil Conditions

Sportsfield Specialties, Inc. strongly recommends the removal of all nets prior to exposure to winter weather, including snow and/or ice storms. Whenever possible, the nets should also be lowered prior to any extreme wind events. Removal/Lowering of the nets will mitigate any unforeseen damage to the poles, nets and/or attachment hardware. Storing nets in a dry, pest free location will help extend the life of the nets. Sportsfield Specialties, Inc. will not be held liable or assume responsibility for any damage to the nets, poles and/or corresponding attachment hardware if the nets are not removed/lowered prior to the above described wind and/or weather events.

PROPRIETARY AND CONFIDENTIAL
THE INFORMATION CONTAINED IN THIS DRAWING IS THE SOLE PROPERTY OF SPORTSFIELD SPECIALTIES INC. ANY REPRODUCTION IN PART OR AS A WHOLE WITHOUT THE WRITTEN PERMISSION OF SPORTSFIELD SPECIALTIES INC. IS PROHIBITED.

BTTBS (LGBBTTN-BS) - Baseball Single Tension Batting Tunnel

Not To Scale

Sportsfield Specialties Inc 05302019

SPORTSFIELD SPECIALTIES
WWW.SPORTSFIELDSPECIALTIES.COM
Excellence from Design to Installation
41155 State Highway 10, PO Box 231, Delhi, NY 13753 CALL: 888-975-3343 FAX: 607-746-8481

For Use With:
SG824R
SG721R
SG618R

Mobility wheel kit for use with synthetic turf or natural grass applications

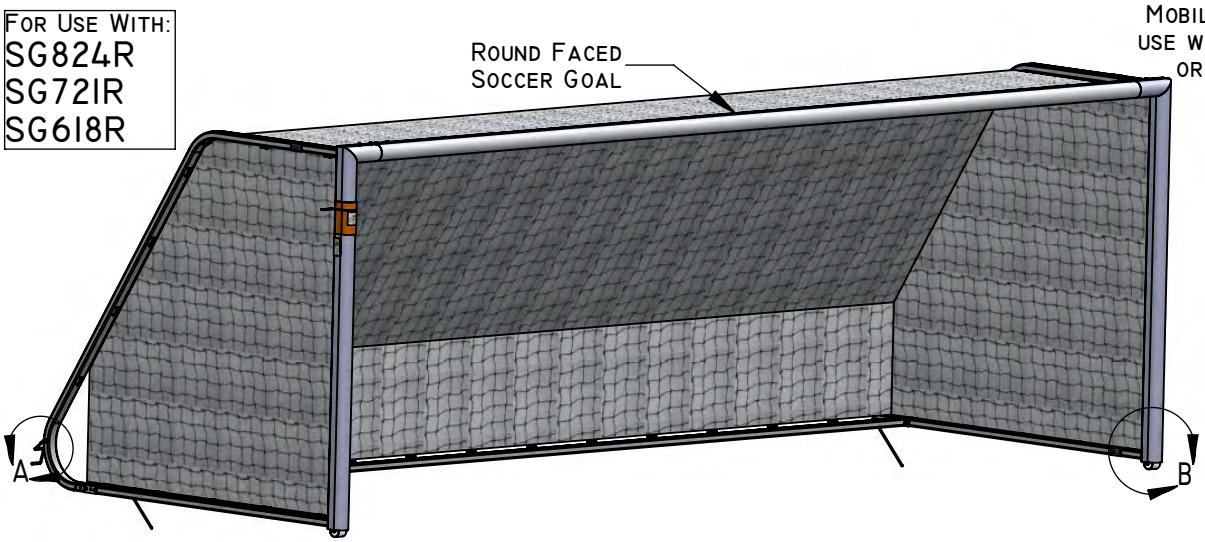

DETAIL A

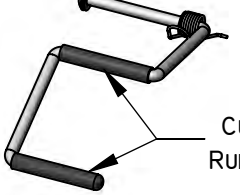

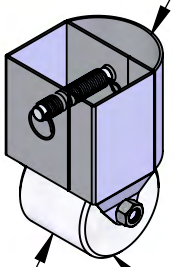

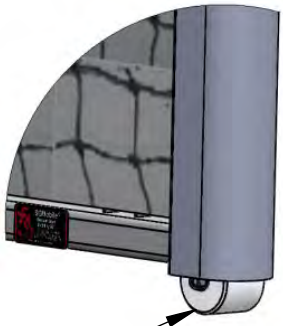

DETAIL B

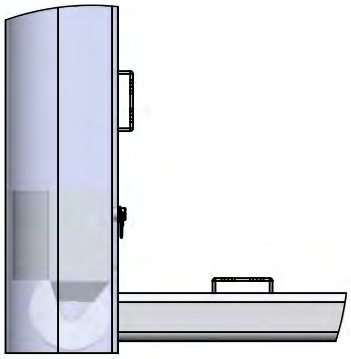

WHEEL IN GAME POSITION

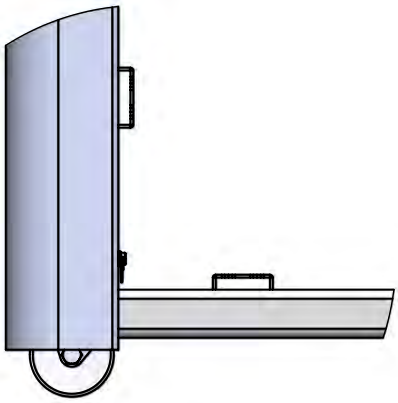

WHEEL IN MOBILE POSITION

PROPRIETARY AND CONFIDENTIAL
THE INFORMATION CONTAINED IN THIS DRAWING IS THE SOLE PROPERTY OF SPORTSFIELD SPECIALTIES INC. ANY REPRODUCTION IN PART OR AS A WHOLE WITHOUT THE WRITTEN PERMISSION OF SPORTSFIELD SPECIALTIES INC. IS PROHIBITED.

SGMKR (SG4955) SGMobile®
Round Faced Soccer Goal Integrated Wheel Kit

Not To Scale

Sportsfield Specialties Inc 07262016

REPLACEMENT PARTS

Contact Sportsfield Specialties Customer Service at 1-888-975-3343 for replacement hardware.

Sportsfield Specialties, Inc.
P.O. Box 231
41155 State Highway 10
Delhi, N.Y. 13753
Phone: 888-975-3343
Fax: 607-746-8911
www.sportsfieldspecialties.com

SPORTSFIELD SPECIALTIES
WWW.SPORTSFIELDSPECIALTIES.COM
Excellence from Design to Installation
41155 State Highway 10, PO Box 231, Delhi, NY 13753 CALL: 888-975-3343 FAX: 607-746-8481

GPAFIT Access Frame Kit + for use with Ground Sleeve and Base Plate Mount AdjustRight® Football Goal Posts Installed in Synthetic Turf Applications

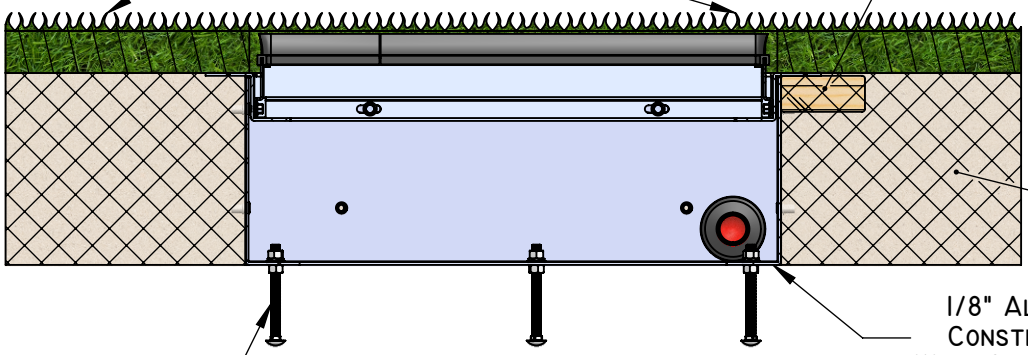

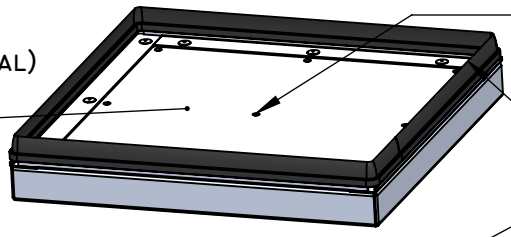

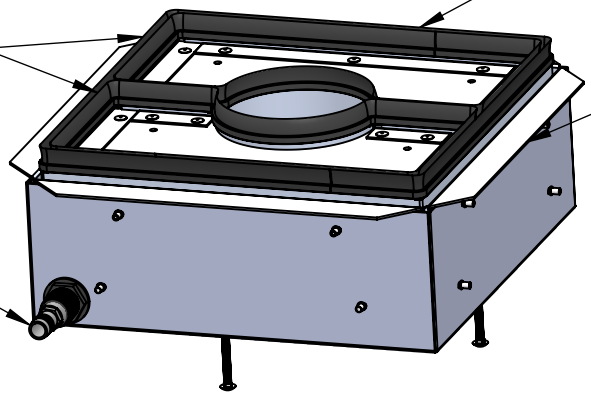

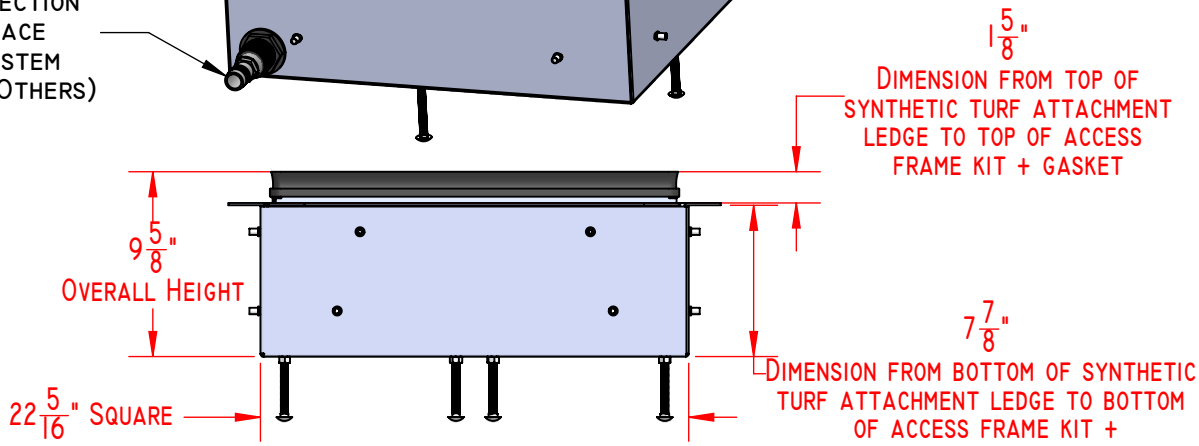

PROPRIETARY AND CONFIDENTIAL
THE INFORMATION CONTAINED IN THIS DRAWING IS THE SOLE PROPERTY OF SPORTSFIELD SPECIALTIES INC. ANY REPRODUCTION IN PART OR AS A WHOLE WITHOUT THE WRITTEN PERMISSION OF SPORTSFIELD SPECIALTIES INC. IS PROHIBITED.

GPAFIT (GP4570) Access Frame Kit + with Infill Retainer System for Synthetic Turf Applications

Not To Scale

Sportsfield Specialties Inc 08222017

TFDDH - Discus and Hammer ThrowForm® System Dual Pad

SECTION 11 68 33.43 Athletic Field Equipment - Track and Field Equipment

PART 1 GENERAL

1.01 WORK INCLUDED

A. Provide all equipment and materials, and do all work necessary to furnish and install the athletic equipment, as indicated on the drawings and as specified herein. Athletic equipment shall include, but not be limited to:

1. TFDDH - Discus and Hammer ThrowForm® System Dual Pad

1.02 RELATED WORK

A. Examine contract documents for requirements that affect work of this section. Other specification divisions and sections that directly relate to the work of this section include, but are not limited to:

1. Division 03 – Concrete; Sections: Cast-in-Place Concrete
2. Division 31 – Earthwork; Sections: Excavation and Backfill and Establishment of Sub-Grade Elevations
3. Division 32 – Exterior Improvements; Sections: Athletic and Recreational Surfacing, Concrete and Asphalt

1.03 REFERENCES

A. Comply with applicable requirements of the following standards. Where these standards conflict with other specified requirements, the most restrictive requirements shall govern.

1. National Federation of State High School Associations (NFHS)
2. National Collegiate Athletic Association (NCAA)
3. International Association of Athletics Federations (IAAF)
4. American Sports Builders Association (ASBA)
5. Manufacturers Data and Recommended Installation Requirements

1.04 SUBMITTALS

A. Manufacturers Product Data

1. Provide manufacturers product data prior to actual field installation work, for Architects or Owners representatives

review.

B. Shop Drawings

1. Provide drawings of the manufacturers recommended installation and foundation requirements prior to actual field installation work, for Architects or Owners representatives review.

1.05 QUALITY ASSURANCE

A. Manufacturers warranties shall pass to the Owner and certification made that the product materials meet all applicable grade trademarks or conform to industry standards and inspection requirements.

1.06 PRODUCT DELIVERY AND STORAGE

A. Materials delivered to the site shall be examined for damage or defects in shipping. Any defects shall be noted and reported to the Owners representative. Replacements, if necessary, shall be immediately re-ordered, so as to minimize any conflict with the construction schedule. Sound materials shall be stored above ground under protective cover or indoors so as to provide proper protection.

PART 2 PRODUCTS

2.01 TFDDH - Discus and Hammer ThrowForm® System Dual Pad

A. BASE: TFDDH - Discus and Hammer ThrowForm® System Dual Pad as Manufactured and Supplied by:

Sportsfield Specialties, Inc.
P.O. Box 231
41155 State Highway 10
Delhi, NY 13753
p. 888-975-3343
www.sportsfieldspecialties.com

B. COMPONENTS:

1. TFDDH - Discus and Hammer ThrowForm® System Dual Pad:
    a. 10’ x 17’-2” x 6” Aluminum Four (4) Piece Forming Assembly
        i. Formed 3/16” (0.1875”) Aluminum Frame and Cross Bracing
            1. 3/16” (0.1875”) Aluminum Staking Gussets

2. Rebar Notches
ii. Bolt Together Construction

b. Discus Throw Ring:
   i. Rolled 4” x ¼” (0.25”) Aluminum Flat Bar
   ii. Inside Diameter: 98-1/2”
   iii. ¾” (0.75”) Recessed Conrete Finishing Screed Line
   iv. Integrally Welded to Forming Assembly
c. Hammer Throw Ring:
   i. Rolled 4” x ¼” (0.25”) Aluminum Flat Bar
   ii. Inside Diameter: 84”
   iii. ¾” (0.75”) Recessed Conrete Finishing Screed Line
   iv. Integrally Welded to Forming Assembly
d. Discus and Hammer Throw Ring Spacing: 7’-9 ¼” (2.37m) Center-to-Center
e. Twenty (20) ½” (0.50”) Diameter Aluminum Drainage Pipes Welded Flush with Repressed Concrete Pad
f. Assembly Hardware

PART 3 EXECUTION

3.01 INSTALLATION OF EQUIPMENT

A. All ThrowForm® Systems shall be installed as recommended per manufacturer's written instructions and as indicated on the drawings. Concrete anchoring foundations to be determined by others based on local soil conditions and building codes. Installer should have a minimum of five (5) ThrowForm® System installations or similar experience in the previous three (3) years.

END OF SECTION

SPORTSFIELD SPECIALTIES
WWW.SPORTSFIELDSPECIALTIES.COM

Excellence from Design to Installation
41155 State Highway 10, PO Box 231, Delhi, NY 13753 CALL: 888-975-3343 FAX: 607-746-8481

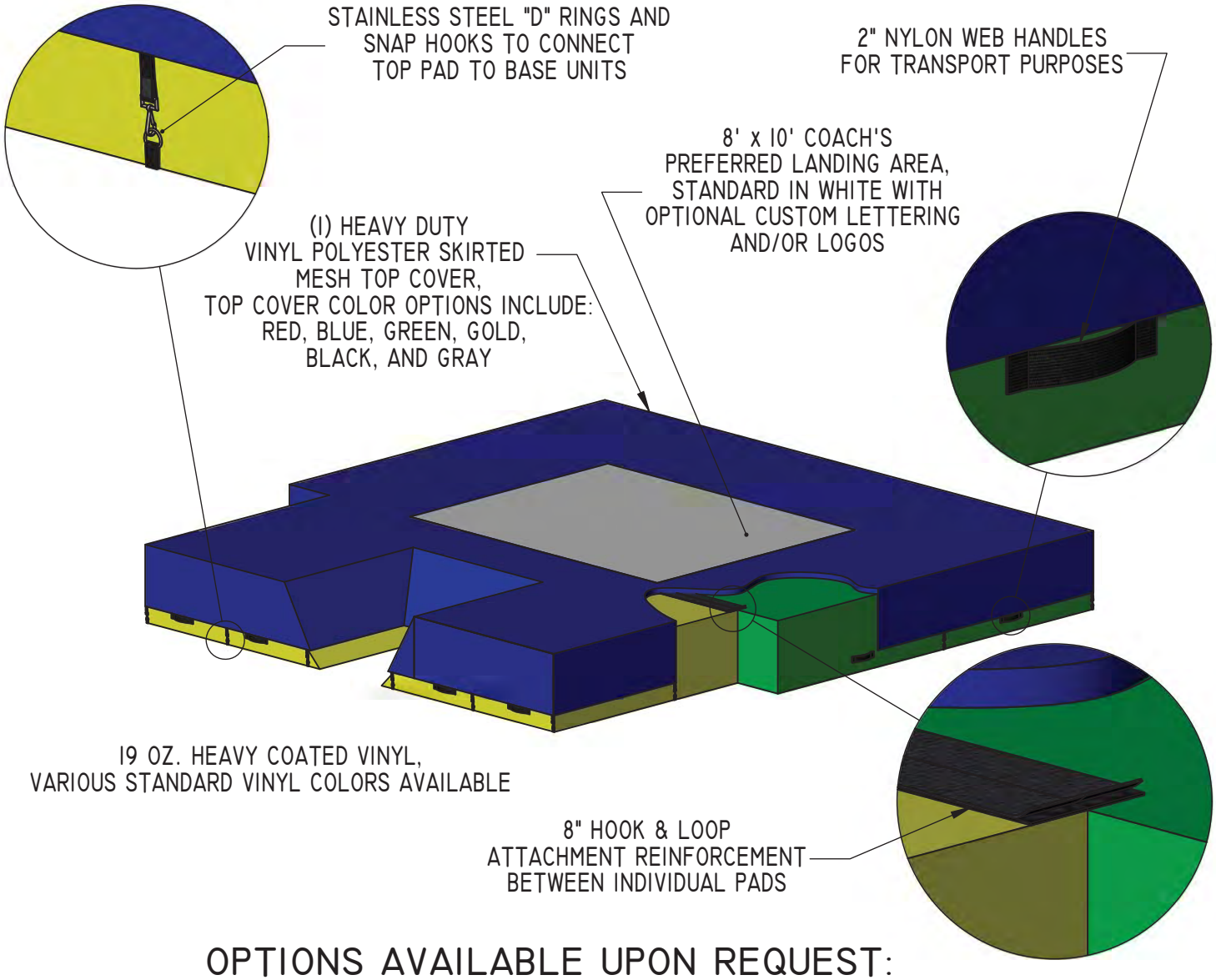

OPTIONS AVAILABLE UPON REQUEST:

TFPV2021LAWC - CHAMPION BRONZE ALL WEATHER COVER
TFPV2021LGC - CHAMPION BRONZE GROUND COVER
TFPVBPREC642416 - BASE PROTECTORS (SET OF 2)
CUSTOM LETTERING AND/OR LOGOS

MEETS AND/OR EXCEEDS ALL NFHS SPECIFICATIONS

TFPVPBSC - PLANTING BOX SAFETY COLLAR, MANDATORY IN 2003, NFHS RULE 7, SECTION 5, ARTICLE 14*
** ALL POLE VAULT LANDING PAD SYSTEMS COME STANDARD WITH A PLANTING BOX SAFETY COLLAR*

PROPRIETARY AND CONFIDENTIAL
THE INFORMATION CONTAINED IN THIS DRAWING IS THE SOLE PROPERTY OF SPORTSFIELD SPECIALTIES INC. ANY REPRODUCTION IN PART OR AS A WHOLE WITHOUT THE WRITTEN PERMISSION OF SPORTSFIELD SPECIALTIES INC. IS PROHIBITED.

JUMPZONE® CHAMPION BRONZE POLE VAULT LANDING SYSTEM OVERVIEW
TFPV2021L

NOT TO SCALE

SPORTSFIELD SPECIALTIES INC 08172012

SPORTSFIELD SPECIALTIES
WWW.SPORTSFIELDSPECIALTIES.COM

Excellence from Design to Installation
41155 State Highway 10, PO Box 231, Delhi, NY 13753 CALL: 888-975-3343 FAX: 607-746-8481

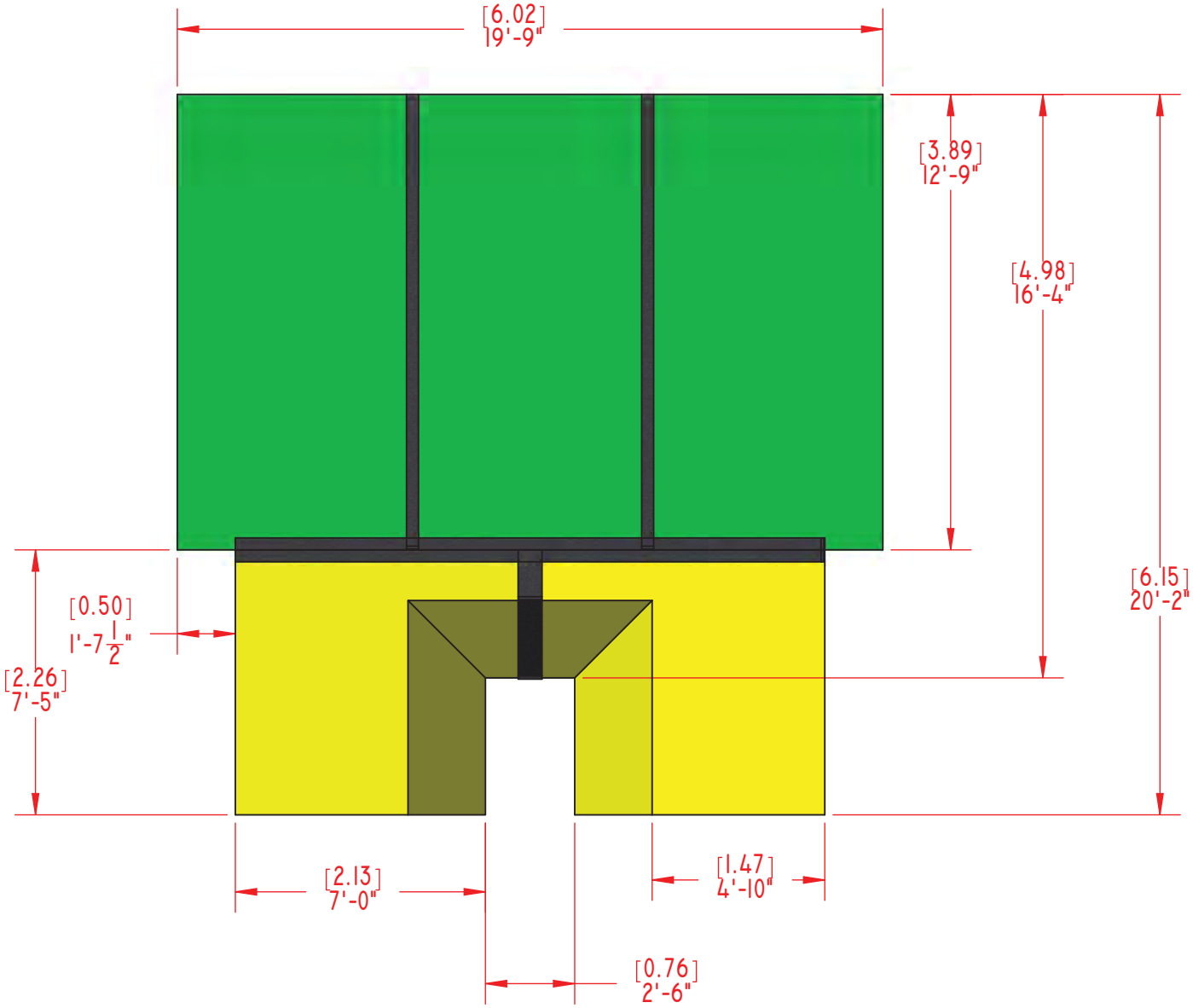

MEETS AND/OR EXCEEDS ALL NFHS SPECIFICATIONS

OVERALL SIZE: 19'-9" X 20'-2" X 26"
METRIC: 6.02M X 6.15M X .66M
THREE (3) BASE UNITS: 6'-7" X 12'-9" X 26" (GREEN)
TWO (2) FRONT SLANT UNITS: 8'-3" X 7'-5" X 26" (YELLOW)
ONE (1) SKIRTED MESH TOP COVER: (NOT SHOWN)
ONE (1) TFPVPBSC - PLANTING BOX SAFETY COLLAR (NOT SHOWN)

PROPRIETARY AND CONFIDENTIAL
THE INFORMATION CONTAINED IN THIS DRAWING IS THE SOLE PROPERTY OF SPORTSFIELD SPECIALTIES INC. ANY REPRODUCTION IN PART OR AS A WHOLE WITHOUT THE WRITTEN PERMISSION OF SPORTSFIELD SPECIALTIES INC. IS PROHIBITED.

JumpZone® Champion Bronze Pole Vault Landing System Overview
TFPV202IL

Not To Scale

Sportsfield Specialties Inc 08172012

SPORTSFIELD SPECIALTIES
WWW.SPORTSFIELDSPECIALTIES.COM
Excellence from Design to Installation
41155 State Highway 10, PO Box 231, Delhi, NY 13753 CALL: 888-975-3343 FAX: 607-746-8481

FOUNDATION REQUIREMENTS BASED ON LOCAL CODES AND SOIL CONDITIONS

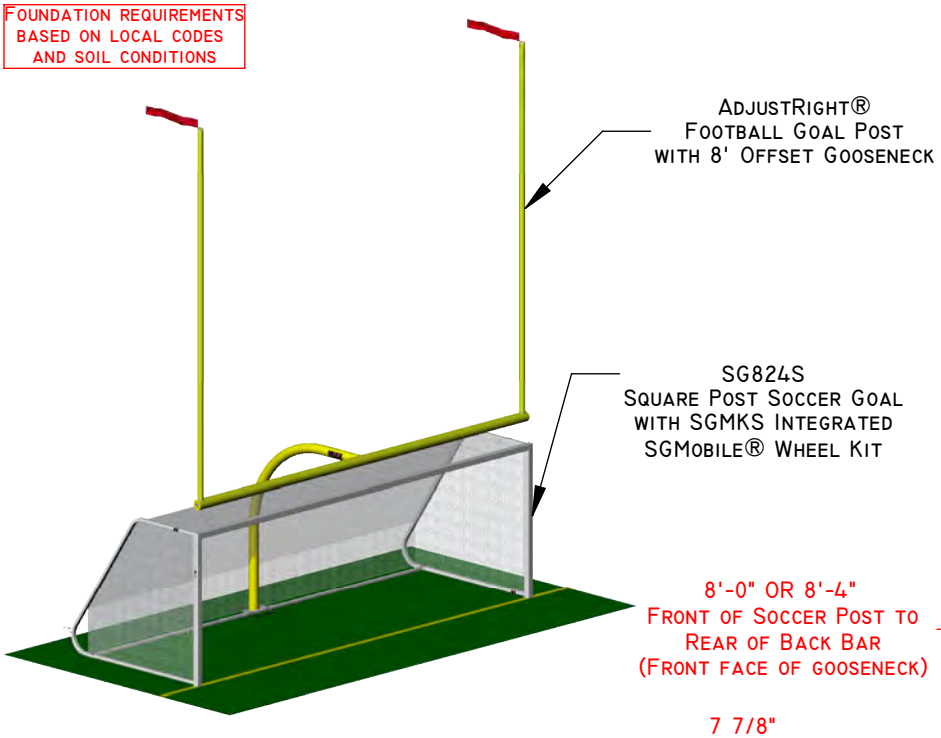

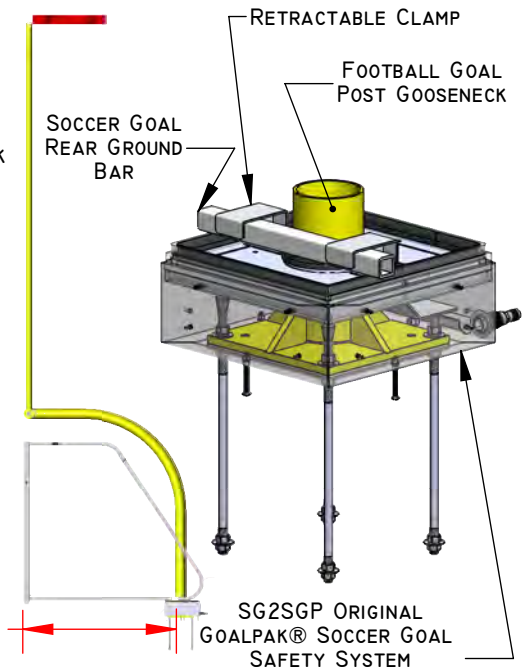

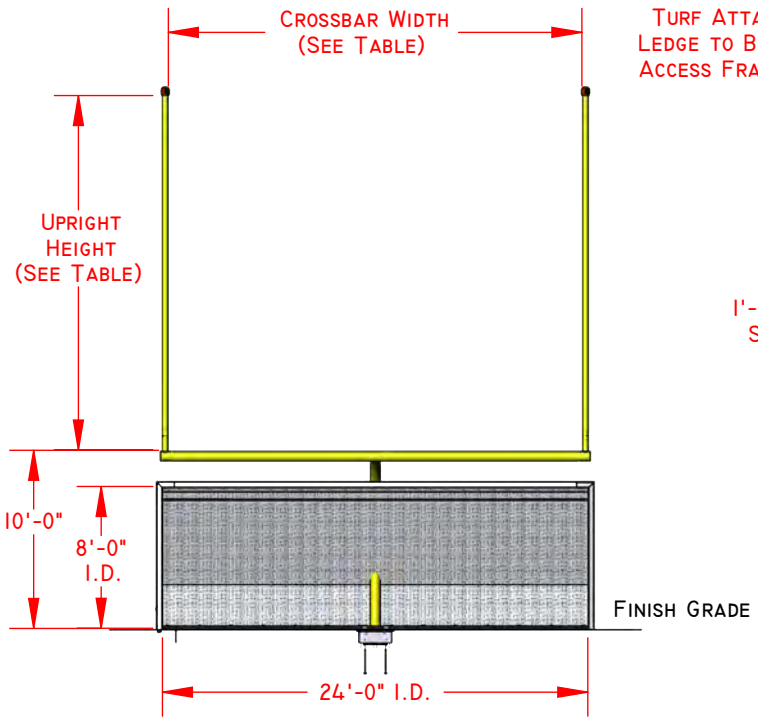

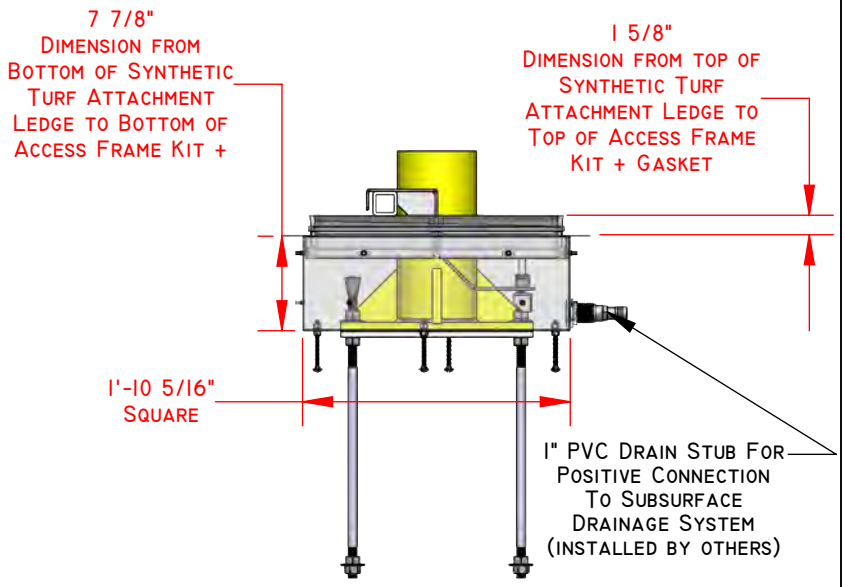

PART NO.	UPRIGHT HEIGHT	MODEL	CROSSBAR WIDTH (I.D.)
GPKS20ADJPL	20'-0"	ADJUSTABLE	18'-6" / 23'-4"
GPKS20COLPL	20'-0"	COLLEGE	18'-6"
GPKS20HSPL	20'-0"	HIGH SCHOOL	23'-4"
GPKS30ADJPL	30'-0"	ADJUSTABLE	18'-6" / 23'-4"
GPKS30COLPL	30'-0"	COLLEGE	18'-6"
GPKS30HSPL	30'-0"	HIGH SCHOOL	23'-4"

PROPRIETARY AND CONFIDENTIAL
THE INFORMATION CONTAINED IN THIS DRAWING IS THE SOLE PROPERTY OF SPORTSFIELD SPECIALTIES INC. ANY REPRODUCTION IN PART OR AS A WHOLE WITHOUT THE WRITTEN PERMISSION OF SPORTSFIELD SPECIALTIES INC. IS PROHIBITED.

ORIGINAL GOALPAK® FOOTBALL / SQUARE SOCCER GOAL SYSTEM, BASE PLATED MOUNTED

NOT TO SCALE

SPORTSFIELD SPECIALTIES INC 12082017

SECTION 09 64 66
ARCHITECTURAL SPECIFICATIONS FOR INDOOR WOOD ATHLETIC FLOORING

PART 1 – GENERAL

1.1 *SECTION INCLUDES*

A. Supply and installation of MFMA Maple Wood Flooring System
B. Application of the game lines
C. References for the correct construction and preparation of concrete slabs to receive flooring.

1.2 *SUBMITTALS*

A. Product Data:
Manufacturer's promotional brochures, specifications and installation instructions
B. Samples:
1. Submit for selection and approval three (3) sets of brochures, samples or sample boards.
2. Submit color samples of all the available game line paint colors for selection and approval.
C. Closeout Submittals:
1. Submit three (3) copies of manufacturer's maintenance instructions.
2. Submit three (3) copies of the material and installation warranties as specified.

1.3 *QUALITY ASSURANCE*

A. Qualifications:
1. The indoor surfacing shall have been actively marketed for a minimum of five (5) years.
2. The MFMA Maple shall be produced by an FSC Certified Mill.
3. The MFMA Maple shall be produced by a US manufacturer.
4. The surfacing supplier shall be an established firm experienced in the field and appointed as a distributor by the manufacturer.
B. Certifications:
1. Installer to submit manufacturer's or distributor's certification attesting that they are an approved installer.
C. Testing:
Tests shall be relative for athletic use with certificates from independent testing resources to be made available upon request. Test results shall be no more than 5 years old and performed according to ASTM and/or EN standard testing procedures.

1.4 *DELIVERY, STORAGE AND HANDLING*

A. Delivery:
Material shall not be delivered until all related work is in place and finished and/or proper storage facilities and conditions can be provided and guaranteed stable according to FieldTurf USA, Inc. recommendations.
B. Storage:

Store the material in a secure, clean and dry location. A temperature range of 55° to 78° and a relative humidity of between 35% to 50% should be maintained.

1.5 *PROJECT/SITE CONDITIONS*

A. It is the responsibility of the general contractor/construction manager to maintain project/site conditions acceptable for the installation.
B. The area in which the surfacing will be installed shall be dry and weather tight. Permanent heat, light and ventilation shall be installed and operable. All other trades shall have completed their work prior to installation. All overhead work which includes the installation of mechanical work, lighting, backstops, scoreboards, etc., are installed. The general contractor or Construction Manager shall maintain a secure and clean working environment before, during and after the installation.
C. An effective low-permeance vapor barrier is placed directly beneath the concrete subfloor. For "on" or "below grade" installations, it is recommended to provide a permanent vapor barrier resistant to long term hydrostatic pressure/moisture emissions. Protrusions should be sealed to prevent moisture migration into the slab. Moisture should not be allowed to enter the slab after the completed construction.
D. Concrete substrate to be constructed and finished in accordance with MFMA recommendations. Slab's finish shall be no more than 1/8" deflection within a 10ft radius.
E. Concrete subfloor must be clean and free of all foreign materials or objects.
F. Concrete slab shall be fortified with continual steel reinforcement. Fiber reinforcement alone shall not be considered adequate fortification.

1.6 *WARRANTY*

A. Materials:
The maple flooring shall be covered by the manufacturer against product defects for 10 years.
B. Installation:
The installation shall be covered against poor workmanship and faulty installation by a two (2) year written, limited warranty provided by the contractor performing/overseeing the installation.

1.7 *ADDITIONAL MATERIALS*

Furnish to the owner additional materials containing a total of at least 1%.

PART 2 - PRODUCTS

2.1 *MANUFACTURERS*

The basis of the design for the surfacing is Clutch Court-FlexLock Panel as supplied by Tarkett Sports. All other installation accessories and related components must be either made or approved by the supplier. Other products may be approved as equal if deemed qualified and submitted in accordance with the General Conditions. Test reports confirming compliance from an

Independent Sports Laboratory must be provided along with samples, technical data, installation, maintenance, and warranty prior to acceptance as an alternative product.

2.2 *MATERIALS*

Clutch Court- FlexLock Panel
A prefabricated cross air ventilated lattice system incorporating an interlocking profile for ease of installation. Floating panels are 4' x 8' double layer of 1" x 6" pine strips spaced 3" and aligned at a 45° angle. All intersecting joints of panel are double screwed at the time of construction for greater dimensional stability.

Cushion underlayment shall be a densified ½" foam cushion as provided by FieldTurf USA, Inc.

1. Physical properties of the flooring system shall conform to the following minimums:

MFMA Maple Width	…….	2 ¼"
MFMA Maple Length	…….	Random
MFMA Maple Grade	…….	2nd or Better Northern Hard Maple
Maple Thickness	…….	25/32"
Total Thickness		2 ½"
Subfloor Construction	…….	Prefabricated FlexLock Panels as provided by Tarkett Sports
Force Reduction Shock Pad	…….	½" densified premium foam cushion
Force Reduction	…….	ASTM F2772 Category 4
Ball Bounce	…….	ASTM F2772 > 90%
Vapor Barrier	…….	Minimum 6 mil-overlapped 6"-12" and taped

2. Game Line Paint:
As approved by the finish manufacturer. Colors are to be selected from the manufacturer's standard range.

PART 3 - EXECUTION

3.1 *EXAMINATION*

A. It is the responsibility of the general contractor/construction manager to ensure that project/site conditions are acceptable for the installation.
B. Verify that the area is dry and weather tight. Verify that permanent heat, light, and ventilation are installed and operable.
C. Verify that all other work that could cause damage, dirt and dust, or interrupt the normal pace of the indoor resilient athletic flooring installation is completed.
D. Verify that temperature and humidity are within tolerances.

E. Verify that there are no foreign materials or objects on the subfloor and that the subfloor is clean and ready for installation.
F. Document the results indicating the slab is within manufacturer's tolerances for slab deviations and moisture emissions.

3.2 *PREPARATION OF SURFACES*
A. Sweep the concrete slab so as to remove all dirt and dust.
B. Remove debris or other contaminants that may affect installation.

3.3 *INSTALLATION*
A. The installation area shall be closed to all traffic and activity for a period to be set by the installer. The installation shall not begin until the installer is familiar with the existing conditions.
B. All necessary precautions should be taken to minimize noise, smell, dust, the use of hazardous materials and any other items that may inconvenience others.
C. Install in strict accordance with the manufacturer's written instructions.
D. Paint game lines using approved game line paint in strict accordance with the game line paint manufacturer's instructions.
E. Apply seal and finish coats according to manufacturer's instructions. Use only MFMA approved sealers and finishes.
F. Install appropriate threshold plates or transition strips where necessary.
G. Vented base is required. Install molded vented cove base along all vertical abutments. Pre-molded or field mitered outside corners are acceptable. Inside corners are to be field mitered. Corners and seams are to be installed flush with no gaps. Treat door casings or other vertical abutments not to receive vented cove according to manufacturer's recommendations.

3.4 *CLEANING*
A. Remove all unused materials, tools, and equipment and dispose of any debris properly.

3.5 *PROTECTION*
If required, protect the indoor resilient athletic surfacing from damage using coverings approved by the manufacturer until acceptance of work by the customer or their authorized representative.

3.5 RELATED STANDARDS AND GUIDELINES
A. ASTM F1869 "Standard Test Method for Measuring Moisture Evaporation Rate of Concrete Subfloor Using Anhydrous Calcium Chloride"
B. ACI 302.2R-06 "Guideline for Concrete Slabs that Receive Moisture-Sensitive Flooring Materials"
C. MFMA – Maple Flooring Manufacturer's Association

END OF SECTION

SECTION 09 64 66
ARCHITECTURAL SPECIFICATIONS FOR INDOOR WOOD ATHLETIC FLOORING

PART 1 – GENERAL

1.1 *SECTION INCLUDES*

A. Supply and installation of MFMA Maple Wood Flooring System
B. Application of the game lines
C. References for the correct construction and preparation of concrete slabs to receive flooring.

1.2 *SUBMITTALS*

A. Product Data:
Manufacturer's promotional brochures, specifications and installation instructions
B. Samples:
1. Submit for selection and approval three (3) sets of brochures, samples or sample boards.
2. Submit color samples of all the available game line paint colors for selection and approval.
C. Closeout Submittals:
1. Submit three (3) copies of manufacturer's maintenance instructions.
2. Submit three (3) copies of the material and installation warranties as specified.

1.3 *QUALITY ASSURANCE*

A. Qualifications:
1. The indoor surfacing shall have been actively marketed for a minimum of five (5) years.
2. The MFMA Maple shall be produced by an FSC Certified Mill.
3. The MFMA Maple shall be produced by a US manufacturer.
4. The surfacing supplier shall be an established firm experienced in the field and appointed as a distributor by the manufacturer.
B. Certifications:
1. Installer to submit manufacturer's or distributor's certification attesting that they are an approved installer.
C. Testing:
Tests shall be relative for athletic use with certificates from independent testing resources to be made available upon request. Test results shall be no more than 5 years old and performed according to ASTM and/or EN standard testing procedures.

1.4 *DELIVERY, STORAGE AND HANDLING*

A. Delivery:
Material shall not be delivered until all related work is in place and finished and/or proper storage facilities and conditions can be provided and guaranteed stable according to FieldTurf USA, Inc. recommendations.
B. Storage:

Store the material in a secure, clean and dry location. A temperature range of 55° to 78° and a relative humidity of between 35% to 50% should be maintained.

1.5 *PROJECT/SITE CONDITIONS*

A. It is the responsibility of the general contractor/construction manager to maintain project/site conditions acceptable for the installation.
B. The area in which the surfacing will be installed shall be dry and weather tight. Permanent heat, light and ventilation shall be installed and operable. All other trades shall have completed their work prior to installation. All overhead work which includes the installation of mechanical work, lighting, backstops, scoreboards, etc., are installed. The general contractor or Construction Manager shall maintain a secure and clean working environment before, during and after the installation.
C. An effective low-permeance vapor barrier is placed directly beneath the concrete subfloor. For "on" or "below grade" installations, it is recommended to provide a permanent vapor barrier resistant to long term hydrostatic pressure/moisture emissions. Protrusions should be sealed to prevent moisture migration into the slab. Moisture should not be allowed to enter the slab after the completed construction.
D. Concrete substrate to be constructed and finished in accordance with MFMA recommendations. Slab's finish shall be no more than 1/8" deflection within a 10ft radius.
E. Concrete subfloor must be clean and free of all foreign materials or objects.
F. Concrete slab shall be fortified with continual steel reinforcement. Fiber reinforcement alone shall not be considered adequate fortification.

1.6 *WARRANTY*

A. Materials:
The maple flooring shall be covered by the manufacturer against product defects for 10 years.
B. Installation:
The installation shall be covered against poor workmanship and faulty installation by a two (2) year written, limited warranty provided by the contractor performing/overseeing the installation.

1.7 *ADDITIONAL MATERIALS*

Furnish to the owner additional materials containing a total of at least 1%.

PART 2 - PRODUCTS

2.1 *MANUFACTURERS*

The basis of the design for the surfacing is Clutch Court-Performance Anchor as supplied by FieldTurf USA, Inc. All other installation accessories and related components must be either made or approved by the supplier. Other products may be approved as equal if deemed qualified and submitted in accordance with the General Conditions. Test reports confirming compliance from an

Independent Sports Laboratory must be provided along with samples, technical data, installation, maintenance, and warranty prior to acceptance as an alternative product.

2.2 *MATERIALS*

Clutch Court- Performance Anchor System

1. Physical properties of the flooring system shall conform to the following minimums:

MFMA Maple Width	…….	2 ¼”
MFMA Maple Length	…….	Random
Maple Thickness	…….	25/32”
Total System Thickness	…….	2 1/2”
Subfloor Construction	…….	Tarkett Sports engineered 4ft x 8ft panels.
Force Reduction Shock Pad	…….	¾” TPR Shock Pad supplied by Tarkett Sports
MFMA Maple Grade	…….	2nd or Better Northern Hard Maple
Vapor Barrier	…….	Minimum 6 mil-overlapped 6”-12” and taped
ASTM F2772 Classification	…….	Category 4

2. Game Line Paint:
As approved by the finish manufacturer. Colors are to be selected from the manufacturer’s standard range.

PART 3 - EXECUTION

3.1 *EXAMINATION*

A. It is the responsibility of the general contractor/construction manager to ensure that project/site conditions are acceptable for the installation.
B. Verify that the area is dry and weather tight. Verify that permanent heat, light, and ventilation are installed and operable.
C. Verify that all other work that could cause damage, dirt and dust, or interrupt the normal pace of the indoor resilient athletic flooring installation is completed.
D. Verify that temperature and humidity are within tolerances.
E. Verify that there are no foreign materials or objects on the subfloor and that the subfloor is clean and ready for installation.
F. Document the results indicating the slab is within manufacturer’s tolerances for slab deviations and moisture emissions.

3.2 *PREPARATION OF SURFACES*

A. Sweep the concrete slab so as to remove all dirt and dust.
B. Remove debris or other contaminants that may affect installation.

3.3 *INSTALLATION*

A. The installation area shall be closed to all traffic and activity for a period to be set by the installer. The installation shall not begin until the installer is familiar with the existing conditions.
B. All necessary precautions should be taken to minimize noise, smell, dust, the use of hazardous materials and any other items that may inconvenience others.
C. Install in strict accordance with the manufacturer's written instructions.
D. Paint game lines using approved game line paint in strict accordance with the game line paint manufacturer's instructions.
E. Apply seal and finish coats according to manufacturer's instructions. Use only MFMA approved sealers and finishes.
F. Install appropriate threshold plates or transition strips where necessary.
G. Vented base is required. Install molded vented cove base along all vertical abutments. Pre-molded or field mitered outside corners are acceptable. Inside corners are to be field mitered. Corners and seams are to be installed flush with no gaps. Treat door casings or other vertical abutments not to receive vented cove according to manufacturer's recommendations.

3.4 *CLEANING*

A. Remove all unused materials, tools, and equipment and dispose of any debris properly.

3.5 *PROTECTION*

If required, protect the indoor resilient athletic surfacing from damage using coverings approved by the manufacturer until acceptance of work by the customer or their authorized representative.

3.5 RELATED STANDARDS AND GUIDELINES

A. ASTM F1869 "Standard Test Method for Measuring Moisture Evaporation Rate of Concrete Subfloor Using Anhydrous Calcium Chloride"
B. ACI 302.2R-06 "Guideline for Concrete Slabs that Receive Moisture-Sensitive Flooring Materials"
C. MFMA – Maple Flooring Manufacturer's Association

END OF SECTION

SECTION 09 64 66
ARCHITECTURAL SPECIFICATIONS FOR INDOOR WOOD ATHLETIC FLOORING

PART 1 – GENERAL

1.1 *SECTION INCLUDES*

A. Supply and installation of MFMA Maple Wood Flooring System
B. Application of the game lines
C. References for the correct construction and preparation of concrete slabs to receive flooring.

1.2 *SUBMITTALS*

A. Product Data:
Manufacturer's promotional brochures, specifications and installation instructions
B. Samples:
1. Submit for selection and approval three (3) sets of brochures, samples or sample boards.
2. Submit color samples of all the available game line paint colors for selection and approval.
C. Closeout Submittals:
1. Submit three (3) copies of manufacturer's maintenance instructions.
2. Submit three (3) copies of the material and installation warranties as specified.

1.3 *QUALITY ASSURANCE*

A. Qualifications:
1. The indoor surfacing shall have been actively marketed for a minimum of five (5) years.
2. The MFMA Maple shall be produced by an FSC Certified Mill.
3. The MFMA Maple shall be produced by a US manufacturer.
4. The surfacing supplier shall be an established firm experienced in the field and appointed as a distributor by the manufacturer.
B. Certifications:
1. Installer to submit manufacturer's or distributor's certification attesting that they are an approved installer.
C. Testing:
Tests shall be relative for athletic use with certificates from independent testing resources to be made available upon request. Test results shall be no more than 5 years old and performed according to ASTM and/or EN standard testing procedures.

1.4 *DELIVERY, STORAGE AND HANDLING*

A. Delivery:
Material shall not be delivered until all related work is in place and finished and/or proper storage facilities and conditions can be provided and guaranteed stable according to FieldTurf USA, Inc. recommendations.
B. Storage:

Store the material in a secure, clean and dry location. A temperature range of 55° to 78° and a relative humidity of between 35% to 50% should be maintained.

1.5 *PROJECT/SITE CONDITIONS*

A. It is the responsibility of the general contractor/construction manager to maintain project/site conditions acceptable for the installation.
B. The area in which the surfacing will be installed shall be dry and weather tight. Permanent heat, light and ventilation shall be installed and operable. All other trades shall have completed their work prior to installation. All overhead work which includes the installation of mechanical work, lighting, backstops, scoreboards, etc., are installed. The general contractor or Construction Manager shall maintain a secure and clean working environment before, during and after the installation.
C. An effective low-permeance vapor barrier is placed directly beneath the concrete subfloor. For "on" or "below grade" installations, it is recommended to provide a permanent vapor barrier resistant to long term hydrostatic pressure/moisture emissions. Protrusions should be sealed to prevent moisture migration into the slab. Moisture should not be allowed to enter the slab after the completed construction.
D. Concrete substrate to be constructed and finished in accordance with MFMA recommendations. Slab's finish shall be no more than 1/8" deflection within a 10ft radius.
E. Concrete subfloor must be clean and free of all foreign materials or objects.
F. Concrete slab shall be fortified with continual steel reinforcement. Fiber reinforcement alone shall not be considered adequate fortification.

1.6 *WARRANTY*

A. Materials:
The maple flooring shall be covered by the manufacturer against product defects for 10 years.
B. Installation:
The installation shall be covered against poor workmanship and faulty installation by a two (2) year written, limited warranty provided by the contractor performing/overseeing the installation.

1.7 *ADDITIONAL MATERIALS*

Furnish to the owner additional materials containing a total of at least 1%.

PART 2 - PRODUCTS

2.1 *MANUFACTURERS*

The basis of the design for the surfacing is Clutch Court-Performance as supplied by FieldTurf USA, Inc. All other installation accessories and related components must be either made or approved by the supplier. Other products may be approved as equal if deemed qualified and submitted in accordance with the General Conditions. Test reports confirming compliance from an

Independent Sports Laboratory must be provided along with samples, technical data, installation, maintenance, and warranty prior to acceptance as an alternative product.

2.2 *MATERIALS*

Clutch Court- Performance System

1. Physical properties of the flooring system shall conform to the following minimums:

MFMA Maple Width	…….	2 ¼”
MFMA Maple Length	…….	Random
Maple Thickness	…….	25/32”
Total Thickness		2 ½”
Subfloor Construction	…….	2 layers of 15/32” APA rated plywood minimum of 4 ply per panel
Force Reduction Shock Pad	…….	¾” TPR Shock Pad supplied by Tarkett Sports
MFMA Maple Grade	…….	2nd or Better Northern Hard Maple
Vapor Barrier	…….	Minimum 6 mil-overlapped 6”-12” and taped
ASTM F2772 Classification	…….	Class 5

2. Game Line Paint:
As approved by the finish manufacturer. Colors are to be selected from the manufacturer’s standard range.

PART 3 - EXECUTION

3.1 *EXAMINATION*

A. It is the responsibility of the general contractor/construction manager to ensure that project/site conditions are acceptable for the installation.
B. Verify that the area is dry and weather tight. Verify that permanent heat, light, and ventilation are installed and operable.
C. Verify that all other work that could cause damage, dirt and dust, or interrupt the normal pace of the indoor resilient athletic flooring installation is completed.
D. Verify that temperature and humidity are within tolerances.
E. Verify that there are no foreign materials or objects on the subfloor and that the subfloor is clean and ready for installation.
F. Document the results indicating the slab is within manufacturer’s tolerances for slab deviations and moisture emissions.

3.2 *PREPARATION OF SURFACES*

A. Sweep the concrete slab so as to remove all dirt and dust.
B. Remove debris or other contaminants that may affect installation.

3.3 *INSTALLATION*

A. The installation area shall be closed to all traffic and activity for a period to be set by the installer. The installation shall not begin until the installer is familiar with the existing conditions.
B. All necessary precautions should be taken to minimize noise, smell, dust, the use of hazardous materials and any other items that may inconvenience others.
C. Install in strict accordance with the manufacturer's written instructions.
D. Paint game lines using approved game line paint in strict accordance with the game line paint manufacturer's instructions.
E. Apply seal and finish coats according to manufacturer's instructions. Use only MFMA approved sealers and finishes.
F. Install appropriate threshold plates or transition strips where necessary.
G. Vented base is required. Install molded vented cove base along all vertical abutments. Pre-molded or field mitered outside corners are acceptable. Inside corners are to be field mitered. Corners and seams are to be installed flush with no gaps. Treat door casings or other vertical abutments not to receive vented cove according to manufacturer's recommendations.

3.4 *CLEANING*

A. Remove all unused materials, tools, and equipment and dispose of any debris properly.

3.5 *PROTECTION*

If required, protect the indoor resilient athletic surfacing from damage using coverings approved by the manufacturer until acceptance of work by the customer or their authorized representative.

3.5 RELATED STANDARDS AND GUIDELINES

A. ASTM F1869 "Standard Test Method for Measuring Moisture Evaporation Rate of Concrete Subfloor Using Anhydrous Calcium Chloride"
B. ACI 302.2R-06 "Guideline for Concrete Slabs that Receive Moisture-Sensitive Flooring Materials"
C. MFMA – Maple Flooring Manufacturer's Association

END OF SECTION

SECTION 09 64 66
ARCHITECTURAL SPECIFICATIONS FOR INDOOR WOOD ATHLETIC FLOORING

PART 1 – GENERAL

1.1 *SECTION INCLUDES*

A. Supply and installation of MFMA Maple Wood Flooring System
B. Application of the game lines
C. References for the correct construction and preparation of concrete slabs to receive flooring.

1.2 *SUBMITTALS*

A. Product Data:
Manufacturer's promotional brochures, specifications and installation instructions
B. Samples:
1. Submit for selection and approval three (3) sets of brochures, samples or sample boards.
2. Submit color samples of all the available game line paint colors for selection and approval.
C. Closeout Submittals:
1. Submit three (3) copies of manufacturer's maintenance instructions.
2. Submit three (3) copies of the material and installation warranties as specified.

1.3 *QUALITY ASSURANCE*

A. Qualifications:
1. The indoor surfacing shall have been actively marketed for a minimum of five (5) years.
2. The MFMA Maple shall be produced by an FSC Certified Mill.
3. The MFMA Maple shall be produced by a US manufacturer.
4. The surfacing supplier shall be an established firm experienced in the field and appointed as a distributor by the manufacturer.
B. Certifications:
1. Installer to submit manufacturer's or distributor's certification attesting that they are an approved installer.
C. Testing:
Tests shall be relative for athletic use with certificates from independent testing resources to be made available upon request. Test results shall be no more than 5 years old and performed according to ASTM and/or EN standard testing procedures.

1.4 *DELIVERY, STORAGE AND HANDLING*

A. Delivery:
Material shall not be delivered until all related work is in place and finished and/or proper storage facilities and conditions can be provided and guaranteed stable according to FieldTurf USA, Inc. recommendations.
B. Storage:

Store the material in a secure, clean and dry location. A temperature range of 55° to 78° and a relative humidity of between 35% to 50% should be maintained.

1.5 *PROJECT/SITE CONDITIONS*

A. It is the responsibility of the general contractor/construction manager to maintain project/site conditions acceptable for the installation.
B. The area in which the surfacing will be installed shall be dry and weather tight. Permanent heat, light and ventilation shall be installed and operable. All other trades shall have completed their work prior to installation. All overhead work which includes the installation of mechanical work, lighting, backstops, scoreboards, etc., are installed. The general contractor or Construction Manager shall maintain a secure and clean working environment before, during and after the installation.
C. An effective low-permeance vapor barrier is placed directly beneath the concrete subfloor. For "on" or "below grade" installations, it is recommended to provide a permanent vapor barrier resistant to long term hydrostatic pressure/moisture emissions. Protrusions should be sealed to prevent moisture migration into the slab. Moisture should not be allowed to enter the slab after the completed construction.
D. Concrete substrate to be constructed and finished in accordance with MFMA recommendations. Slab's finish shall be no more than 1/8" deflection within a 10ft radius.
E. Concrete subfloor must be clean and free of all foreign materials or objects.
F. Concrete slab shall be fortified with continual steel reinforcement. Fiber reinforcement alone shall not be considered adequate fortification.

1.6 *WARRANTY*

A. Materials:
The maple flooring shall be covered by the manufacturer against product defects for 10 years.
B. Installation:
The installation shall be covered against poor workmanship and faulty installation by a two (2) year written, limited warranty provided by the contractor performing/overseeing the installation.

1.7 *ADDITIONAL MATERIALS*

Furnish to the owner additional materials containing a total of at least 1%.

PART 2 - PRODUCTS

2.1 *MANUFACTURERS*

The basis of the design for the surfacing is Clutch Court-Trainer 1 as supplied by FieldTurf USA, Inc. All other installation accessories and related components must be either made or approved by the supplier. Other products may be approved as equal if deemed qualified and submitted in accordance with the General Conditions. Test reports confirming compliance from an Independent

Sports Laboratory must be provided along with samples, technical data, installation, maintenance, and warranty prior to acceptance as an alternative product.

2.2 *MATERIALS*

Clutch Court- Trainer 1

1. Physical properties of the flooring system shall conform to the following minimums:

MFMA Maple Width	…….	2 1/8”
MFMA Maple Length	…….	Random
Maple Thickness	…….	25/32”
MFMA Maple Grade	…….	2nd or Better Northern Hard Maple
Total Thickness		2 5/8”
Subfloor Construction	…….	2” x 3” Pine Sleepers 4’ or 8’ length. Spaced 12” OC. over 3/8” Synthetic Trainer Cushion spaced 9” along length.
Force Reduction	…….	ASTM F2772 Category 2
Ball Bounce		ASTM F2772 > 90%
Vapor Barrier	…….	Minimum 6 mil-overlapped 6”-12” and taped
Finish	……..	As selected from MFMA Certified finish providers.

2. Game Line Paint:

As approved by the finish manufacturer. Colors are to be selected from the manufacturer’s standard range.

PART 3 - EXECUTION

3.1 *EXAMINATION*

A. It is the responsibility of the general contractor/construction manager to ensure that project/site conditions are acceptable for the installation.
B. Verify that the area is dry and weather tight. Verify that permanent heat, light, and ventilation are installed and operable.
C. Verify that all other work that could cause damage, dirt and dust, or interrupt the normal pace of the indoor resilient athletic flooring installation is completed.
D. Verify that temperature and humidity are within tolerances.
E. Verify that there are no foreign materials or objects on the subfloor and that the subfloor is clean and ready for installation.
F. Document the results indicating the slab is within manufacturer’s tolerances for slab deviations and moisture emissions.

3.2 *PREPARATION OF SURFACES*

A. Sweep the concrete slab so as to remove all dirt and dust.
B. Remove debris or other contaminants that may affect installation.

3.3 *INSTALLATION*

A. The installation area shall be closed to all traffic and activity for a period to be set by the installer. The installation shall not begin until the installer is familiar with the existing conditions.
B. All necessary precautions should be taken to minimize noise, smell, dust, the use of hazardous materials and any other items that may inconvenience others.
C. Install in strict accordance with the manufacturer's written instructions.
D. Paint game lines using approved game line paint in strict accordance with the game line paint manufacturer's instructions.
E. Apply seal and finish coats according to manufacturer's instructions. Use only MFMA approved sealers and finishes.
F. Install appropriate threshold plates or transition strips where necessary.
G. Vented base is required. Install molded vented cove base along all vertical abutments. Pre-molded or field mitered outside corners are acceptable. Inside corners are to be field mitered. Corners and seams are to be installed flush with no gaps. Treat door casings or other vertical abutments not to receive vented cove according to manufacturer's recommendations.

3.4 *CLEANING*

A. Remove all unused materials, tools, and equipment and dispose of any debris properly.

3.5 *PROTECTION*

If required, protect the indoor resilient athletic surfacing from damage using coverings approved by the manufacturer until acceptance of work by the customer or their authorized representative.

3.5 RELATED STANDARDS AND GUIDELINES

A. ASTM F1869 "Standard Test Method for Measuring Moisture Evaporation Rate of Concrete Subfloor Using Anhydrous Calcium Chloride"
B. ACI 302.2R-06 "Guideline for Concrete Slabs that Receive Moisture-Sensitive Flooring Materials"
C. MFMA – Maple Flooring Manufacturer's Association

END OF SECTION

SECTION 09 64 66
ARCHITECTURAL SPECIFICATIONS FOR INDOOR WOOD ATHLETIC FLOORING

PART 1 – GENERAL

1.1 *SECTION INCLUDES*

A. Supply and installation of MFMA Maple Wood Flooring System
B. Application of the game lines
C. References for the correct construction and preparation of concrete slabs to receive flooring.

1.2 *SUBMITTALS*

A. Product Data:
Manufacturer's promotional brochures, specifications and installation instructions
B. Samples:
1. Submit for selection and approval three (3) sets of brochures, samples or sample boards.
2. Submit color samples of all the available game line paint colors for selection and approval.
C. Closeout Submittals:
1. Submit three (3) copies of manufacturer's maintenance instructions.
2. Submit three (3) copies of the material and installation warranties as specified.

1.3 *QUALITY ASSURANCE*

A. Qualifications:
1. The indoor surfacing shall have been actively marketed for a minimum of five (5) years.
2. The MFMA Maple shall be produced by an FSC Certified Mill.
3. The MFMA Maple shall be produced by a US manufacturer.
4. The surfacing supplier shall be an established firm experienced in the field and appointed as a distributor by the manufacturer.
B. Certifications:
1. Installer to submit manufacturer's or distributor's certification attesting that they are an approved installer.
C. Testing:
Tests shall be relative for athletic use with certificates from independent testing resources to be made available upon request. Test results shall be no more than 5 years old and performed according to ASTM and/or EN standard testing procedures.

1.4 *DELIVERY, STORAGE AND HANDLING*

A. Delivery:
Material shall not be delivered until all related work is in place and finished and/or proper storage facilities and conditions can be provided and guaranteed stable according to FieldTurf USA, Inc. recommendations.
B. Storage:

Store the material in a secure, clean and dry location. A temperature range of 55° to 78° and a relative humidity of between 35% to 50% should be maintained.

1.5 *PROJECT/SITE CONDITIONS*

A. It is the responsibility of the general contractor/construction manager to maintain project/site conditions acceptable for the installation.
B. The area in which the surfacing will be installed shall be dry and weather tight. Permanent heat, light and ventilation shall be installed and operable. All other trades shall have completed their work prior to installation. All overhead work which includes the installation of mechanical work, lighting, backstops, scoreboards, etc., are installed. The general contractor or Construction Manager shall maintain a secure and clean working environment before, during and after the installation.
C. An effective low-permeance vapor barrier is placed directly beneath the concrete subfloor. For "on" or "below grade" installations, it is recommended to provide a permanent vapor barrier resistant to long term hydrostatic pressure/moisture emissions. Protrusions should be sealed to prevent moisture migration into the slab. Moisture should not be allowed to enter the slab after the completed construction.
D. Concrete substrate to be constructed and finished in accordance with MFMA recommendations. Slab's finish shall be no more than 1/8" deflection within a 10ft radius.
E. Concrete subfloor must be clean and free of all foreign materials or objects.
F. Concrete slab shall be fortified with continual steel reinforcement. Fiber reinforcement alone shall not be considered adequate fortification.

1.6 *WARRANTY*

A. Materials:
The maple flooring shall be covered by the manufacturer against product defects for 10 years.
B. Installation:
The installation shall be covered against poor workmanship and faulty installation by a two (2) year written, limited warranty provided by the contractor performing/overseeing the installation.

1.7 *ADDITIONAL MATERIALS*

Furnish to the owner additional materials containing a total of at least 1%.

PART 2 - PRODUCTS

2.1 *MANUFACTURERS*

The basis of the design for the surfacing is Clutch Court-Trainer 2 as supplied by FieldTurf USA, Inc. All other installation accessories and related components must be either made or approved by the supplier. Other products may be approved as equal if deemed qualified and submitted in accordance with the General Conditions. Test reports confirming compliance from an Independent

Sports Laboratory must be provided along with samples, technical data, installation, maintenance, and warranty prior to acceptance as an alternative product.

2.2 *MATERIALS*

Clutch Court- Trainer 2

1. Physical properties of the flooring system shall conform to the following minimums:

MFMA Maple Width	…….	2 ¼”
MFMA Maple Length	…….	Random
Maple Thickness	…….	25/32”
MFMA Maple Grade	…….	2nd or Better Northern Hard Maple
Total Thickness		3 1/8”
Subfloor Construction	…….	1 layer of 15/32” APA rated 4 ply plywood over 2” x 3” Pine Sleepers 4’ or 8’ in length. Spaced 12” OC over 3/8” Synthetic Trainer Cushion spaced 12” along length.
Force Reduction	…….	ASTM F2772 Category 2
Ball Bounce		ASTM F2772 > 90%
Vapor Barrier	…….	Minimum 6 mil-overlapped 6”-12” and taped
Finish	……..	As selected from MFMA Certified finish providers.

2. Game Line Paint:
As approved by the finish manufacturer. Colors are to be selected from the manufacturer’s standard range.

PART 3 - EXECUTION

3.1 *EXAMINATION*

A. It is the responsibility of the general contractor/construction manager to ensure that project/site conditions are acceptable for the installation.
B. Verify that the area is dry and weather tight. Verify that permanent heat, light, and ventilation are installed and operable.
C. Verify that all other work that could cause damage, dirt and dust, or interrupt the normal pace of the indoor resilient athletic flooring installation is completed.
D. Verify that temperature and humidity are within tolerances.
E. Verify that there are no foreign materials or objects on the subfloor and that the subfloor is clean and ready for installation.
F. Document the results indicating the slab is within manufacturer’s tolerances for slab deviations and moisture emissions.

3.2 *PREPARATION OF SURFACES*

A. Sweep the concrete slab so as to remove all dirt and dust.
B. Remove debris or other contaminants that may affect installation.

3.3 *INSTALLATION*

A. The installation area shall be closed to all traffic and activity for a period to be set by the installer. The installation shall not begin until the installer is familiar with the existing conditions.
B. All necessary precautions should be taken to minimize noise, smell, dust, the use of hazardous materials and any other items that may inconvenience others.
C. Install in strict accordance with the manufacturer's written instructions.
D. Paint game lines using approved game line paint in strict accordance with the game line paint manufacturer's instructions.
E. Apply seal and finish coats according to manufacturer's instructions. Use only MFMA approved sealers and finishes.
F. Install appropriate threshold plates or transition strips where necessary.
G. Vented base is required. Install molded vented cove base along all vertical abutments. Pre-molded or field mitered outside corners are acceptable. Inside corners are to be field mitered. Corners and seams are to be installed flush with no gaps. Treat door casings or other vertical abutments not to receive vented cove according to manufacturer's recommendations.

3.4 *CLEANING*

A. Remove all unused materials, tools, and equipment and dispose of any debris properly.

3.5 *PROTECTION*

If required, protect the indoor resilient athletic surfacing from damage using coverings approved by the manufacturer until acceptance of work by the customer or their authorized representative.

3.5 RELATED STANDARDS AND GUIDELINES

A. ASTM F1869 "Standard Test Method for Measuring Moisture Evaporation Rate of Concrete Subfloor Using Anhydrous Calcium Chloride"
B. ACI 302.2R-06 "Guideline for Concrete Slabs that Receive Moisture-Sensitive Flooring Materials"
C. MFMA – Maple Flooring Manufacturer's Association

END OF SECTION

SECTION 09 64 66
ARCHITECTURAL SPECIFICATIONS FOR INDOOR WOOD ATHLETIC FLOORING

PART 1 – GENERAL

1.1 *SECTION INCLUDES*

A. Supply and installation of MFMA Maple Wood Flooring System
B. Application of the game lines
C. References for the correct construction and preparation of concrete slabs to receive flooring.

1.2 *SUBMITTALS*

A. Product Data:
Manufacturer's promotional brochures, specifications and installation instructions
B. Samples:
1. Submit for selection and approval three (3) sets of brochures, samples or sample boards.
2. Submit color samples of all the available game line paint colors for selection and approval.
C. Closeout Submittals:
1. Submit three (3) copies of manufacturer's maintenance instructions.
2. Submit three (3) copies of the material and installation warranties as specified.

1.3 *QUALITY ASSURANCE*

A. Qualifications:
1. The indoor surfacing shall have been actively marketed for a minimum of five (5) years.
2. The MFMA Maple shall be produced by an FSC Certified Mill.
3. The MFMA Maple shall be produced by a US manufacturer.
4. The surfacing supplier shall be an established firm experienced in the field and appointed as a distributor by the manufacturer.
B. Certifications:
1. Installer to submit manufacturer's or distributor's certification attesting that they are an approved installer.
C. Testing:
Tests shall be relative for athletic use with certificates from independent testing resources to be made available upon request. Test results shall be no more than 5 years old and performed according to ASTM and/or EN standard testing procedures.

1.4 *DELIVERY, STORAGE AND HANDLING*

A. Delivery:
Material shall not be delivered until all related work is in place and finished and/or proper storage facilities and conditions can be provided and guaranteed stable according to FieldTurf USA, Inc. recommendations.
B. Storage:

Store the material in a secure, clean and dry location. A temperature range of 55° to 78° and a relative humidity of between 35% to 50% should be maintained.

1.5 *PROJECT/SITE CONDITIONS*

A. It is the responsibility of the general contractor/construction manager to maintain project/site conditions acceptable for the installation.
B. The area in which the surfacing will be installed shall be dry and weather tight. Permanent heat, light and ventilation shall be installed and operable. All other trades shall have completed their work prior to installation. All overhead work which includes the installation of mechanical work, lighting, backstops, scoreboards, etc., are installed. The general contractor or Construction Manager shall maintain a secure and clean working environment before, during and after the installation.
C. An effective low-permeance vapor barrier is placed directly beneath the concrete subfloor. For "on" or "below grade" installations, it is recommended to provide a permanent vapor barrier resistant to long term hydrostatic pressure/moisture emissions. Protrusions should be sealed to prevent moisture migration into the slab. Moisture should not be allowed to enter the slab after the completed construction.
D. Concrete substrate to be constructed and finished in accordance with MFMA recommendations. Slab's finish shall be no more than 1/8" deflection within a 10ft radius.
E. Concrete subfloor must be clean and free of all foreign materials or objects.
F. Concrete slab shall be fortified with continual steel reinforcement. Fiber reinforcement alone shall not be considered adequate fortification.

1.6 *WARRANTY*

A. Materials:
The maple flooring shall be covered by the manufacturer against product defects for 10 years.
B. Installation:
The installation shall be covered against poor workmanship and faulty installation by a two (2) year written, limited warranty provided by the contractor performing/overseeing the installation.

1.7 *ADDITIONAL MATERIALS*

Furnish to the owner additional materials containing a total of at least 1%.

PART 2 - PRODUCTS

2.1 *MANUFACTURERS*

The basis of the design for the surfacing is Clutch Court-Trainer 3 as supplied by FieldTurf USA, Inc. All other installation accessories and related components must be either made or approved by the supplier. Other products may be approved as equal if deemed qualified and submitted in accordance with the General Conditions. Test reports confirming compliance from an Independent

Sports Laboratory must be provided along with samples, technical data, installation, maintenance, and warranty prior to acceptance as an alternative product.

2.2 *MATERIALS*

Clutch Court- Trainer 3

1. Physical properties of the flooring system shall conform to the following minimums:

MFMA Maple Width	…….	2 ¼”
MFMA Maple Length	…….	Random
Maple Thickness	…….	25/32”
Total Thickness		2 ½”
Subfloor Construction	…….	2 layers of 15/32” APA rated plywood minimum of 4 ply per panel
Force Reduction Shock Pad	…….	3/8” Resilient Shock Pad supplied by Tarkett Sports
MFMA Maple Grade	…….	2nd or Better Northern Hard Maple
Vapor Barrier	…….	Minimum 6 mil-overlapped 6”-12” and taped

2. Game Line Paint:

As approved by the finish manufacturer. Colors are to be selected from the manufacturer’s standard range.

PART 3 - EXECUTION

3.1 *EXAMINATION*

A. It is the responsibility of the general contractor/construction manager to ensure that project/site conditions are acceptable for the installation.
B. Verify that the area is dry and weather tight. Verify that permanent heat, light, and ventilation are installed and operable.
C. Verify that all other work that could cause damage, dirt and dust, or interrupt the normal pace of the indoor resilient athletic flooring installation is completed.
D. Verify that temperature and humidity are within tolerances.
E. Verify that there are no foreign materials or objects on the subfloor and that the subfloor is clean and ready for installation.
F. Document the results indicating the slab is within manufacturer’s tolerances for slab deviations and moisture emissions.

3.2 *PREPARATION OF SURFACES*

A. Sweep the concrete slab so as to remove all dirt and dust.
B. Remove debris or other contaminants that may affect installation.

3.3 *INSTALLATION*

A. The installation area shall be closed to all traffic and activity for a period to be set by the installer. The installation shall not begin until the installer is familiar with the existing conditions.
B. All necessary precautions should be taken to minimize noise, smell, dust, the use of hazardous materials and any other items that may inconvenience others.
C. Install in strict accordance with the manufacturer's written instructions.
D. Paint game lines using approved game line paint in strict accordance with the game line paint manufacturer's instructions.
E. Apply seal and finish coats according to manufacturer's instructions. Use only MFMA approved sealers and finishes.
F. Install appropriate threshold plates or transition strips where necessary.
G. Vented base is required. Install molded vented cove base along all vertical abutments. Pre-molded or field mitered outside corners are acceptable. Inside corners are to be field mitered. Corners and seams are to be installed flush with no gaps. Treat door casings or other vertical abutments not to receive vented cove according to manufacturer's recommendations.

3.4 *CLEANING*

A. Remove all unused materials, tools, and equipment and dispose of any debris properly.

3.5 *PROTECTION*

If required, protect the indoor resilient athletic surfacing from damage using coverings approved by the manufacturer until acceptance of work by the customer or their authorized representative.

3.5 RELATED STANDARDS AND GUIDELINES

A. ASTM F1869 "Standard Test Method for Measuring Moisture Evaporation Rate of Concrete Subfloor Using Anhydrous Calcium Chloride"
B. ACI 302.2R-06 "Guideline for Concrete Slabs that Receive Moisture-Sensitive Flooring Materials"
C. MFMA – Maple Flooring Manufacturer's Association

END OF SECTION

SECTION 09 65 66
ARCHITECTURAL SPECIFICATIONS FOR INDOOR RESILIENT ATHLETIC SURFACING

PART 1 – GENERAL

1.1 *SECTION INCLUDES*

A. Supply and installation of the indoor resilient multipurpose surfacing
B. Application of the game lines
C. References for the correct construction and preparation of concrete slabs to receive resilient flooring.

1.2 *SUBMITTALS*

A. Product Data:
   1. Manufacturer's promotional brochures, specifications and installation instructions
B. Manufacturer Certifications:
   1. Provide certification that accurately identifies the Original Equipment Manufacturer (OEM) of flooring furnished for this project including manufacturer's name, address and factory location.
   2. Suppliers of private label flooring for this project must identify themselves as such and fully disclose the OEM information listed above.
   3. All "manufacturer" requirements in these specifications must be complied with by the OEM, including warranties, certifications, qualifications, product data, test results, environmental requirements, performance data, etc.
C. Samples:
   1. Submit for selection and approval three (3) sets of the indoor resilient multipurpose surfacing, manufacturer's brochures, samples or sample boards of all of the available colors, textures and styles.
   2. Submit color samples of all the available game line paint colors for selection and approval.
D. Closeout Submittals:
   1. Submit three (3) copies of the indoor resilient multipurpose surfacing and manufacturer's maintenance instructions.
   2. Submit three (3) copies of the material and installation warranties as specified.

1.3 *QUALITY ASSURANCE*

A. Qualifications:
   1. The indoor resilient multipurpose surfacing shall have been actively marketed for a minimum of ten (10) years.
   2. The indoor resilient multipurpose surfacing shall be manufactured in an ISO 9001 certified plant.
   3. The indoor resilient multipurpose surfacing shall be manufactured in an ISO 14001 certified plant.
   4. The indoor resilient multipurpose surfacing supplier shall be an established firm, experienced in the field, and competent in the techniques required by the manufacturer.
   5. The installer of the indoor resilient multipurpose surfacing shall have a minimum of five (5) years of experience in the field installing indoor resilient multipurpose surfacing and have worked on at least five (5) projects of similar size, type and complexity.

B. Certifications:
   1. Installer to submit the indoor resilient athletic surfacing manufacturer's or distributor's certification attesting that they are an approved installer of the indoor resilient multipurpose surfacing.
   2. The ind**o**or resilient multipurpose surfacing manufacturer to submit official ISO 9001 certification for the facility in which the indoor resilient multipurpose surfacing is manufactured.

C. Testing:
   Tests shall be relative for multi-purpose use with certificates from independent testing resources to be made available upon request. Test results shall be performed according to ASTM standard testing procedures including ASTM F2772 "Standard Specification for Athletic Performance Properties of Indoor Sports Floor Systems".

1.4 *DELIVERY, STORAGE AND HANDLING*

A. Delivery:
   Material shall not be delivered until all related work is in place and finished and/or proper storage facilities and conditions can be provided and guaranteed stable according to FieldTurf USA, Inc. recommendations.

B. Storage:
   1. Store the material in a secure, clean and dry location.
   2. Maintain temperature between 55° and 85° Fahrenheit.
   3. Store the indoor resilient athletic surfacing rolls in an upright position on a smooth flat surface immediately upon delivery to jobsite.
   4. Rolls shipped in rigid protective cardboard containers can be laid horizontally prior to unpacking and installation.

1.5 *PROJECT/SITE CONDITIONS*

A. It is the responsibility of the general contractor/construction manager to maintain project/site conditions acceptable for the installation of the indoor resilient multipurpose flooring.

B. The area in which the indoor resilient multipurpose surfacing will be installed shall be dry and weather tight. Permanent heat, light and ventilation shall be installed and operable.

C. All other trades shall have completed their work prior to the installation of the resilient athletic flooring. The general contractor or construction manager shall maintain a secure and clean working environment before, during and after the installation.

D. Maintain a stable room temperature of at least 65°F for a minimum of one (1) week prior to, during and thereafter installation.

E. An effective low-permeance vapor barrier is placed directly beneath the concrete subfloor. For "on" or "below grade" installations, it is recommended to provide a permanent vapor barrier resistant to long term hydrostatic pressure/moisture exposure. Protrusions should be sealed to prevent moisture migration into the slab. Moisture should not be allowed to enter the slab after the completed construction.

F. Concrete subfloor surface pH level within the 7 to 11 range dependent upon installation type.

G. Concrete subfloor should be no greater than 1/8" within a 10 ft diameter. This tolerance can be measured in accordance with ASTM E1155. A specified (F_F) of 50 and an (F_L) of 30 should reach this degree of floor flatness and floor level. There is no numerical correlation between F numbers and the deviation from the straight

edge. However, the above specified numbers should achieve a flat floor with minimal deviation in the slab. Reference ACI 117 and ACI 302.1R. The general contractor should provide a certificate of compliance with the above recommendations.

H. Concrete subfloor must be clean and free of all foreign materials or objects including, but not limited to, curing compounds and sealers.

I. Fill cracks, grooves, voids, depressions, and other minor imperfections. Follow the manufacturer's directions. Moveable joints must be treated utilizing specific transitioning joint devices depending upon the architect's recommendations. Follow current ASTM F710 guidelines for the preparation of concrete slabs to receive resilient flooring.

J. Refer to ACI 302.2R "Guidelines for Concrete Slabs that Receive Moisture-Sensitive Flooring Materials" for concrete design and construction.

K. Concrete slab shall be fortified with continual steel reinforcement. Fiber reinforcement alone shall not be considered adequate fortification.

1.6 *WARRANTY*

A. Special Limited Warranty:
   1. Manufacturer's standard form in which manufacturer agrees to repair or replace sports flooring including labor that fails within specified warranty period.

B. Material warranty must be direct from the product manufacturer.
   1. Material warranties must come from original manufacturer or division thereof. Private label warranties from distributors or brokers are not valid. Supply original point of manufacturing upon request.

C. Failures include, but are not limited to, the following:
   1. Material manufacturing defects.
   2. Surface wear and deterioration to the point of wear-through of wear layer per ASTM F410/ASTM F1303.
   3. Failure due to substrate moisture exposure exceeding 98 percent relative humidity when tested according to ASTM F2170.

D. Warranty Period:
   1. <u>For material defects and surface wear-through:</u> **25** years from date of substantial completion.
   2. <u>For moisture vapor tolerance:</u> **25** years from date of substantial completion.

E. Installer's Limited Warranty:
   1. Installer's standard form in which installer agrees to repair or replace sports flooring that fails due to poor workmanship or faulty installation within the specified warranty period.
   2. Warranty Period: 2 years from date of substantial completion.

1.7 *ADDITIONAL MATERIALS*

A. Furnish to the owner additional materials containing a total of at least 1% of each different color or design of the indoor resilient athletic surfacing used on the project.

1.8 *LEED™ CERTIFICATION*

A. The indoor resilient athletic surfacing should be able to help this facility to achieve points towards *LEED™ certification.* Flooring system must be certified by FloorScore.
B. LEED categories positively affected by the indoor resilient athletic surfacing:

LEED™ V4 Credit		Contribution
Materials & Resources: Building Product Disclosure & Optimization (BPDO)		
MRc3: Sourcing of Raw Materials	Options 1 & 2	2 Points
MRc4: Material Ingredients	Option 1	1 Point
MRc5: Construction and Demolition Management	Reclamation and Recycling	ReStart® Program
Indoor Environmental Quality		
EQc2: Low-Emitting Materials	TVOC: 0.5 mg/m3 or less	FloorScore®

PART 2 - PRODUCTS

2.1 *MANUFACTURERS*

A. The basis of the design for the indoor resilient multipurpose surfacing is Omnisports 2.0 mm as manufactured by Tarkett.
B. All other installation accessories and related components must be either made or approved by the indoor resilient athletic surfacing manufacturer.
C. Other products may be approved as equal if deemed qualified and submitted in accordance with the General Conditions.
D. Test reports confirming compliance from an independent sports laboratory must be provided along with samples, technical data, installation, maintenance, and warranty prior to acceptance as an alternative product.

2.2 *MATERIALS*

A. Omnisports 2.0 mm - Prefabricated sport surface 2.0 mm (0.08″) with wood flooring design and slightly textured embossed surface as supplied by Tarkett.
   1. Embossing of wood design and solid colors must be the same; varying embossing or surface textures will not be allowed.
   2. Printing of wood design shall closely resemble standard wood strip flooring in size, color, board length, and grain appearance.
   3. The wood design shall be protected by a clear layer of pure PVC (Polyvinyl Chloride) and TopClean xp, a factory-applied UV cured urethane treatment.
   4. Intermediate layers shall be fortified with a non-woven fiberglass grid for increased dimensional stability.
   5. Field constructed products will not be accepted.

B. Physical properties of the indoor resilient athletic surfacing shall conform to the following minimums:

Width	—	6′ 6″ (2 m)
Length	—	85′ (25.9m) approx.
Wear Layer	—	2 mm
Total Thickness	—	2.0 mm
Wear Layer	Type 1– Grade 1	ASTM F1303/F410
Rolling Load	PASSED	0.30 (EN 1569 {11/1999})
Surface Finish Effect	PASSED	ASTM F2772 (80 – 110)
Chemical Resistance	Excellent	ASTM F925
Impact Resistance	PASSED	EN 1717
Abrasion Resistance	PASSED	0.10 (EN ISO 5470-1 {06/1999})
Static Load Limit	PASSED	ASTM F970- Load 175 Lbs
Ball Rebound	PASSED	ASTM F2772 > 90%
Fire Rating	PASSED	ASTM E648 Class 1
Phthalate-free technology	—	YES
REACH Compliant	—	YES
Heavy Metals	—	NO
ISO 9001	—	YES
ISO 14001	—	YES

1. Color: As available from the indoor resilient athletic surfacing manufacturer's standard range.
2. Hardwood Design Series: High definition printing for a realistic wood surface appearance as available from the indoor resilient athletic surfacing manufacturer's standard range.
3. Texture: Texture to remain consistent between solid colors and wood design when blending colors.

C. Welding Rod: As supplied by the indoor resilient athletic surfacing manufacturer or supplier.
   1. Color to blend with the indoor resilient athletic surfacing color or design.
   2. All seams shall be welded to create a monolithic and impermeable surface.

D. Adhesive: As approved by the indoor resilient athletic surfacing manufacturer.

E. Game Line Paint and Primer: As approved by the indoor resilient athletic surfacing manufacturer.

PART 3 - EXECUTION

3.1 *EXAMINATION*

A. It is the responsibility of the general contractor/construction manager to ensure that project/site conditions are acceptable for the installation of the indoor resilient athletic flooring.
B. Verify that the area in which the indoor resilient athletic surfacing will be installed is dry and weather tight. Verify that permanent heat, light and ventilation are installed and operable.
C. Verify that all other work that could cause damage, dirt and dust or interrupt the normal pace of the indoor resilient athletic flooring installation is completed or suspended.
D. Verify that there is a stable room temperature of at least 65◦F.
E. Verify that there are no foreign materials or objects on the subfloor and that the subfloor is clean and ready for installation.
F. *Direct Full Spread Adhering to Concrete Subfloor Multi-Set : moisture content less than 83% RH when tested per ASTM F2170.*
G. Follow Fieldturf USA, Inc. installation recommendations.
H. Do not average the results of the tests. Report all field test results in writing to the General Contractor, Architect, and End User prior to installation.
I. Verify that the concrete subfloor surface pH level is within the 7 - 11 range.
J. Document the results confirming the slab is within manufacturer's tolerances for slab deviation.

3.2 *PREPARATION OF SURFACES*

A. Sand the entire surface of the concrete slab.
B. Sweep the concrete slab so as to remove all dirt and dust. If a sweeping compound is to be used it must be a sweeping compound that does not contain oil or other items that may inhibit the adhesive bond.
C. Slab must be dust free. In the event that dust impairs adhesive bond, priming the slab prior to application of adhesive may be necessary. Follow installation guidelines.
D. Follow OSHA guidelines.

3.3 *INSTALLATION*

A. The installation area shall be closed to all traffic and activity for a period to be set by the indoor resilient athletic surfacing installer. The indoor resilient athletic surfacing installation shall not begin until the installer is familiar with the existing conditions.
B. All necessary precautions should be taken to minimize noise, smell, dust, the use of hazardous materials and any other items that may inconvenience others.
C. Install the indoor resilient athletic surfacing in strict accordance with the indoor resilient athletic surfacing manufacturer's written instructions.
D. Install the indoor resilient athletic surfacing minimizing cross seams. Provide a seam diagram during the submittal process for approval prior to installation. Vinyl Sheet Flooring Seams: Comply with ASTM F 1516. Rout joints and heat weld to permanently and seamlessly fuse sections together.
E. Paint game lines using approved game line paint primer and game line paint in strict accordance with the game line paint manufacturer's instructions.
F. Install appropriate threshold plates or transition strips where necessary.

2.0 *CLEANING*

A. Remove all unused materials, tools, and equipment and dispose of any debris properly. Clean the indoor resilient athletic surfacing in accordance with the manufacturer's instructions.

3.6 *PROTECTION*

A. If required, protect the indoor resilient athletic surfacing from damage using coverings approved by the manufacturer until acceptance of work by the customer or their authorized representative.

3.7 *RELATED STANDARDS AND GUIDELINES*

A. ASTM F2170 "Standard Test Method for Determining Relative Humidity In Concrete Floor Slabs Using In-Situ Probes"
B. ASTM F710 "Standard Practice for Preparing Concrete Floors to Receive Resilient Flooring"
C. ACI 302.2R-06 "Guideline for Concrete Slabs that Receive Moisture-Sensitive Flooring Materials"
D. ASTM F2772-11 "Standard Specification for Athletic Performance Properties of Indoor Sports Floor Systems"

END OF SECTION

SECTION 09 65 66
ARCHITECTURAL SPECIFICATIONS FOR INDOOR RESILIENT ATHLETIC SURFACING

PART 1 – GENERAL

1.1 *SECTION INCLUDES*

A. Supply and installation of the indoor resilient multipurpose surfacing
B. Application of the game lines
C. References for the correct construction and preparation of concrete slabs to receive resilient flooring.

1.2 *SUBMITTALS*

A. Product Data:
   1. Manufacturer's promotional brochures, specifications and installation instructions
B. Manufacturer Certifications:
   1. Provide certification that accurately identifies the Original Equipment Manufacturer (OEM) of flooring furnished for this project including manufacturer's name, address and factory location.
   2. Suppliers of private label flooring for this project must identify themselves as such and fully disclose the OEM information listed above.
   3. All "manufacturer" requirements in these specifications must be complied with by the OEM, including warranties, certifications, qualifications, product data, test results, environmental requirements, performance data, etc.
C. Samples:
   1. Submit for selection and approval three (3) sets of the indoor resilient multipurpose surfacing, manufacturer's brochures, samples or sample boards of all of the available colors, textures and styles.
   2. Submit color samples of all the available game line paint colors for selection and approval.
D. Closeout Submittals:
   1. Submit three (3) copies of the indoor resilient multipurpose surfacing and manufacturer's maintenance instructions.
   2. Submit three (3) copies of the material and installation warranties as specified.

1.3 *QUALITY ASSURANCE*

A. Qualifications:
   1. The indoor resilient multipurpose surfacing shall have been actively marketed for a minimum of ten (10) years.
   2. The indoor resilient multipurpose surfacing shall be manufactured in an ISO 9001 certified plant.
   3. The indoor resilient multipurpose surfacing shall be manufactured in an ISO 14001 certified plant.
   4. The indoor resilient multipurpose surfacing supplier shall be an established firm, experienced in the field, and competent in the techniques required by the manufacturer.
   5. The installer of the indoor resilient multipurpose surfacing shall have a minimum of five (5) years of experience in the field installing indoor resilient multipurpose surfacing and have worked on at least five (5) projects of similar size, type and complexity.

B. Certifications:
   1. Installer to submit the indoor resilient dance floor surfacing manufacturer's certification attesting that they are a trained installer of the indoor resilient multipurpose surfacing.
   2. The indoor resilient multipurpose surfacing manufacturer to submit official ISO 9001 certification for the facility in which the indoor resilient multipurpose surfacing is manufactured.

C. Testing:
   1. Tests shall be relative for multi-purpose use with certificates from independent testing resources to be made available upon request.
   2. Test results shall be no more than 5 years old and performed according to ASTM standard testing procedures.

1.4 *DELIVERY, STORAGE AND HANDLING*

A. Delivery:
   Material shall not be delivered until all related work is in place and finished and/or proper storage facilities and conditions can be provided and guaranteed stable according to Tarkett Sports / FieldTurf USA, Inc. recommendations.

B. Storage:
   1. Store the material in a secure, clean and dry location.
   2. Maintain temperature between 55° and 85° Fahrenheit.
   3. Store the indoor resilient dance floor surfacing rolls in an upright position on a smooth flat surface immediately upon delivery to jobsite.
   4. Rolls shipped in rigid protective cardboard containers can be laid horizontally prior to unpacking and installation.

1.5 *PROJECT/SITE CONDITIONS*

A. It is the responsibility of the general contractor/construction manager to maintain project/site conditions acceptable for the installation of the indoor resilient multipurpose flooring.

B. The area in which the indoor resilient multipurpose surfacing will be installed shall be dry and weather tight. Permanent heat, light and ventilation shall be installed and operable.

C. All other trades shall have completed their work prior to the installation of the resilient dance floor flooring. The general contractor or construction manager shall maintain a secure and clean working environment before, during and after the installation.

D. Maintain a stable room temperature of at least 65°F for a minimum of one (1) week prior to, during and thereafter installation.

E. An effective low-permeance vapor barrier is placed directly beneath the concrete subfloor. For "on" or "below grade" installations, it is recommended to provide a permanent vapor barrier resistant to long term hydrostatic pressure/moisture exposure. Protrusions should be sealed to prevent moisture migration into the slab. Moisture should not be allowed to enter the slab after the completed construction.

F. Concrete subfloor surface pH level within the 7 to 9 range dependent upon installation type.

G. Concrete subfloor should be no greater than 1/8" within a 10 ft diameter. This tolerance can be measured in accordance with ASTM E1155. A specified (F_F) of 50 and an (F_L) of 30 should reach this degree of floor flatness and floor level. There is no numerical correlation between F numbers and the deviation from the straight

edge. However, the above specified numbers should achieve a flat floor with minimal deviation in the slab. Reference ACI 117 and ACI 302.1R. The general contractor should provide a certificate of compliance with the above recommendations.

H. Concrete subfloor must be clean and free of all foreign materials or objects including, but not limited to, curing compounds and sealers.

I. Fill cracks, grooves, voids, depressions, and other minor imperfections. Follow the manufacturer's directions. Moveable joints must be treated utilizing specific transitioning joint devices depending upon the architect's recommendations. Follow current ASTM F710 guidelines for the preparation of concrete slabs to receive resilient flooring.

J. Refer to ACI 302.2R "Guidelines for Concrete Slabs that Receive Moisture-Sensitive Flooring Materials" for concrete design and construction.

K. Concrete slab shall be fortified with continual steel reinforcement. Fiber reinforcement alone shall not be considered adequate fortification.

1.6 *WARRANTY*

A. Special Limited Warranty:
   1. Manufacturer's standard form in which manufacturer agrees to repair or replace sports flooring including labor that fails within specified warranty period.

B. Material warranty must be direct from the product manufacturer.
   1. Material warranties from separate or third party insurance providers are not valid.
   2. Material warranties must come from original manufacturer or division thereof. Private label warranties from distributors or brokers are not valid. Supply original point of manufacturing upon request.

C. Failures include, but are not limited to, the following:
   1. Material manufacturing defects.
   2. Surface wear and deterioration to the point of wear-through of wear layer per ASTM F410/ASTM F1303.
   3. Failure due to substrate moisture exposure exceeding 90 percent relative humidity when tested according to ASTM F2170.

D. Warranty Period:
   1. <u>For material defects and surface wear-through:</u> **10** years from date of substantial completion.
   2. <u>For moisture vapor tolerance:</u> **10** years from date of substantial completion.

E. Installer's Limited Warranty:
   1. Installer's standard form in which installer agrees to repair or replace sports flooring that fails due to poor workmanship or faulty installation within the specified warranty period.
   2. Warranty Period: 2 years from date of substantial completion.

1.7 *ADDITIONAL MATERIALS*

A. Furnish to the owner additional materials containing a total of at least 1% of each different color or design of the indoor resilient dance floor surfacing used on the project.

PART 2 - PRODUCTS

2.1 *MATERIALS*

A. Prefabricated dance floor surfacing 3.5 mm with slightly textured embossed surface.
   1. Intermediate layers shall be fortified with a non-woven fiberglass grid for increased dimensional stability.
   2. The foam force reduction layer shall be high-density closed cell PVC foam with honeycomb embossing, and is applied in one continuous manufacturing process.
   3. Laminated or adhered foam layers will not be allowed.
   4. Field constructed products will not be accepted.

B. Adhesive moisture mitigation combination. Provide non-solvent reactive topically applied moisture mitigation/adhesive according to manufacturer's recommendations.

C. Physical properties of the indoor resilient dance floor surfacing shall conform to the following minimums:

Width	—	6′ 6″ (2 m)
Length	—	49′ (15 m) approx.
Wear Layer	—	2 mm
Total Thickness	—	3.5 mm
Wear Layer	Type 1– Grade 1	ASTM F1303/F410
Force Reduction	PASSED	ASTM F2772 Class 1
Slip Resistance	P3	AS 4586
Surface Finish Effect	PASSED	ASTM F2772 (80 – 110)
Abrasion Volume Loss	Group T: ≤2.0 mm3	EN 660: Part 2
Chemical Resistance	Excellent	ASTM F925
Impact Resistance	PASSED	EN 1717
Abrasion Resistance	PASSED	0.10 (EN ISO 5470-1 {06/1999})
Static Load Limit	PASSED	ASTM F970- Load 175 Lbs
Sound Insulation	Excellent	+/= 19 dB (ISO 717/2)
In-Room Sound Insulation	Excellent	61dB (NF S31-074)
Fire Rating	PASSED	ASTM E648 Class 1
Phthalate-free technology	—	YES
REACH Compliant	—	YES
Heavy Metals	—	NO
ISO 9001	—	YES
ISO 14001	—	YES

   1. Color: As available from the indoor resilient dance floor surfacing manufacturer's standard range.

C. Welding Rod: As supplied by the indoor resilient dance floor surfacing manufacturer or supplier.
   1. Color to blend with the indoor resilient dance floor surfacing color or design.
   2. All seams shall be welded to create a monolithic and impermeable surface.

D. Adhesive: As approved by the indoor resilient dance floor surfacing manufacturer.

PART 3 - EXECUTION

3.1 *EXAMINATION*

A. It is the responsibility of the general contractor/construction manager to ensure that project/site conditions are acceptable for the installation of the indoor resilient dance floor surfacing.
B. Verify that the area in which the indoor resilient dance floor surfacing will be installed is dry and weather tight. Verify that permanent heat, light and ventilation are installed and operable.
C. Verify that all other work that could cause damage, dirt and dust or interrupt the normal pace of the indoor resilient dance flooring installation is completed or suspended.
D. Verify that there is a stable room temperature of at least 65◦F.
E. Verify that there are no foreign materials or objects on the subfloor and that the subfloor is clean and ready for installation.
F. *Direct Full Spread Adhering to Concrete Subfloor: moisture content less than 83% RH when tested per ASTM F2170.*
G. Follow Tarkett Sports / FieldTurf USA, Inc. installation recommendations.
H. Do not average the results of the tests. Report all field test results in writing to the General Contractor, Architect, and End User prior to installation.
I. Verify that the concrete subfloor surface pH level is within the 7 - 10 range.
J. Document the results confirming the slab is within manufacturer's tolerances for slab deviation.

3.2 *PREPARATION OF SURFACES*

A. Sand the entire surface of the concrete slab.
B. Sweep the concrete slab so as to remove all dirt and dust. If a sweeping compound is to be used it must be a sweeping compound that does not contain oil or other items that may inhibit the adhesive bond.
C. Slab must be dust free. In the event that dust impairs adhesive bond, priming the slab prior to application of adhesive may be necessary. Follow installation guidelines.
D. Follow OSHA guidelines.

3.3 *INSTALLATION*

A. The installation area shall be closed to all traffic and activity for a period to be set by the indoor resilient dance floor surfacing installer. The indoor resilient dance floor surfacing installation shall not begin until the installer is familiar with the existing conditions.
B. All necessary precautions should be taken to minimize noise, smell, dust, the use of hazardous materials and any other items that may inconvenience others.
C. Install the indoor resilient dance floor surfacing in strict accordance with the indoor resilient dance floor surfacing manufacturer's written instructions.
D. Install the indoor resilient dance floor surfacing minimizing cross seams. Provide a seam diagram during the submittal process for approval prior to installation. Vinyl Sheet Flooring Seams: Comply with ASTM F 1516. Rout joints and heat weld to permanently and seamlessly fuse sections together.
E. Install appropriate threshold plates or transition strips where necessary.

3.5 *CLEANING*

A. Remove all unused materials, tools, and equipment and dispose of any debris properly. Clean the indoor resilient dance floor surfacing in accordance with the manufacturer's instructions.

3.6 *PROTECTION*

A. If required, protect the indoor resilient dance floor surfacing from damage using coverings approved by the manufacturer until acceptance of work by the customer or their authorized representative.

3.7 *RELATED STANDARDS AND GUIDELINES*

A. ASTM F2170 "Standard Test Method for Determining Relative Humidity In Concrete Floor Slabs Using In-Situ Probes"
B. ASTM F710 "Standard Practice for Preparing Concrete Floors to Receive Resilient Flooring"
C. ACI 302.2R-06 "Guideline for Concrete Slabs that Receive Moisture-Sensitive Flooring Materials"
D. ASTM F2772-11 "Standard Specification for Athletic Performance Properties of Indoor Sports Floor Systems"

END OF SECTION

OMNISPORTS MULTIFLEX Technical Data Sheet

Description

MultiFlex is a versatile synthetic flooring ideal for multi-purpose applications. This system is designed to accommodate a wide variety sports, events and activities. MultiFlex delivers leading durability and smooth surface texture for easy maintenance.

TARKETT SPORTS 25 YEARS WARRANTY

PHTHALATE FREE Technology*

*except recycled content

PROPERTY	STANDARD	VALUE
PHYSICAL DESCRIPTION		
Material	N/A	PVC/Vinyl - Synthetic
Surface treatment	N/A	Pure Rock™ PU protection
Thickness	EN 428 / En 429	6.5 mm (0.256”)
Wear layer thickness	N/A	2.0 mm (0.078”)
Roll length	EN 426/EN 427	20.5 m (67.25’)
Roll width	EN 426/EN 427	2 m (6.5’)
Weight	EN 430	9.46 lb/m2 (0.88 lb/ft2)
Available colours	N/A	2 Woodgrain + 11 solid colours
SPORTS CHARACTERISTICS		
System category	N/A	Point-Elastic
Force Reduction (shock absorption)	ASTM F2772-11	Class 2
Vertical Deformation	ASTM F2772-11	Passed
Ball Rebound	ASTM F2772-11	Passed
Surface Finish Effect	ASTM F2772-11	Passed
TECHNICAL CHARACTERISTICS		
Rolling load	EN 1569	≤ 0.5 mm (no degradation)
Impact resistance	EN 1517	No degradation
Sound insulation (below room)	ISO 717/02	≥ 20 dB
TVOC after 28 days	ISO 1600	≤100µg/m³
Impact sound insulation	ISO 140-8 / ISO 717-2	> 20
Dimensional stability (exposure to heat)	EN ISO 23999	≤ 0.4%
Curling (exposure to heat)	EN ISO 23999	≤ 8mm
Light resistance	ISO 105-B02	≥ 6
Floor heating possibility	N/A	27°C
Microbial resistance	ASTM G21 (backing)	No growth
Reaction to fire	CAN/ULC S102.2	FSC 135/SDV 348
Phthalate-free technology	N/A	Yes
ISO Factory	N/A	ISO factory 9001, 14001 and OSHAS 18001
Warranty	N/A	25-year wear layer & product defect coverage

Note: Technical information is subject to change without notice. The data is for information purposes only. For more detail, please contact us.

Warranty Protection

25-year wear layer and product defect coverage plus 25-year moisture tolerance coverage. Refer to sample warranty document for complete coverage.

Environmental Facts and LEED

For environmental facts and LEED credits, visit: https://www.tarkettsportsindoor.com/wp-content/uploads/2020/02/Booklets-OMNISPORTS-LEED-TS-Indoor-FEB2020.pdf

Maintenance Instructions

For a complete maintenance guide, visit: https://www.tarkettsportsindoor.com/wp-content/uploads/2021/03/Omnisports-Care-and-Maintenance-DEC2020.pdf

Installation Methods

- GreenLay™: perimeter glue installation requiring only 2% of the surface area to be glued with Tarkett’s solvent-free Multi-Poxy adhesive (moisture tolerance: 92% RH per ASTM F2170)
- Full Adhesive: installation using Tarkett’s Multi-Poxy adhesive, HS Sports Spray, or Multi-Set acrylic adhesive over the entire area (moisture tolerance: 98% RH using Multi-Poxy, 98% RH using HS Sports Spray, 83% using Multi-Set per ASTM F2170)
- Tarkolay: installation over moisture barrier using Multi-Poxy adhesive (no moisture testing required)

Tarkett SPORTS INDOOR

OMNISPORTS MULTIFLEX Technical Data Sheet

Available Colors

Pure Maple

Pure Oak*

Sapphire

Topaz

Turquoise

Graphite

Garnet

Amber

Coral

Citrine

Jade

Emerald

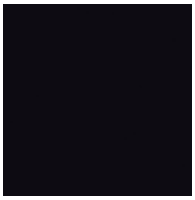
Onyx

*This pattern has a 3” wide plank. Maple patterns have a width of 2 1/4”.

The colors presented here are representations only. An actual sample is recommended for exact color evaluation and matching. Other Custom Colors available. Contact your Regional Sales Manager.

888.364.6541
tarkettsportsindoor.com

Tarkett SPORTS INDOOR

OMNISPORTS MULTIFLEX Fiche technique

Description

MultiFlex est un revêtement sportif polyvalent, idéal pour plusieurs applications. Ce système est conçu pour accueillir une grande variété de sports, d'événements et d'activités. MultiFlex offre une durabilité de premier ordre et une texture de surface lisse pour un entretien facile.

TARKETT SPORTS 25 ANS GARANTIE

PHTHALATE FREE Technology
*except recycled content

PROPRIÉTÉ	NORME	VALEUR
DESCRIPTION PHYSIQUE		
Matériel	N/A	PVC/vinyle - Synthetique
Surface treatment	N/A	Protection PU Pure Rock™
Épaisseur	EN 428 / En 429	6,5 mm (0,256 po)
Épaisseur de la couche d'usure	N/A	2,0 mm (0,078 po)
Longueur du rouleau	EN 426/EN 427	20,5 m (67,25 pi)
Largeur du rouleau	EN 426/EN 427	2 m (6,5 pi)
Poids	EN 430	9,46 lbs/m^2 (0,88 lbs/pi^2)
Couleurs disponibles	N/A	2 Woodgrain + 11 couleurs solides
CARACTÉRISTIQUES SPORT		
Catégorie de système	N/A	Point-Elastic
Réduction des forces	ASTM F2772-11	Classe 2
Déformation verticale	ASTM F2772-11	Réussi
Rebond du ballon	ASTM F2772-11	Réussi
Effet du fini de surface	ASTM F2772-11	Réussi
CARACTÉRISTIQUES TECHNIQUES		
Charge roulante	EN 1569	≤ 0,5 mm (aucune dégradation)
Résistance aux impacts	EN 1517	Aucune dégradation
Isolation sonore sous la pièce	ISO 717/02	≥ 20 dB
TVOC après 28 jours	ISO 1600	≤100 µg/m³
Isolation aux bruits d'impact	ISO 140-8 / ISO 717-2	> 20
Stabilité dimensionnelle (exposition à la chaleur)	EN ISO 23999	≤ 0,4%
Curling (exposure to heat)	EN ISO 23999	≤ 8 mm
Light resistance	ISO 105-B02	≥ 6
Floor heating possibility	N/A	27°C
Résistance microbienne	ASTM G21 (backing)	Aucun étirement
Réaction au feu	CAN/ULC S102.2	FSC 135/SDV 348
Technologie sans phtalate	N/A	Oui
Usine ISO	N/A	Usine ISO 9001, 14001 et OSHAS 18001
Garantie	N/A	25 ans pour la couche d'usure et toute défaut du produit

Note: Les informations techniques peuvent être modifiées sans préavis. Les données sont à titre informatif uniquement. Pour plus de détails, veuillez nous contacter.

Garantie

25 ans pour la couche d'usure et tout défaut du produit, ainsi que 25 ans de protection pour la tolérance à l'humidité. Se reporter au document de garantie type pour la garantie complète.

Faits environnementaux et normes LEED

Pour plus de détails sur les faits environnementaux et les normes LEED, consultez :
https://www.tarkettsportsindoor.com/wp-content/uploads/2020/02/Booklets-OMNISPORTS-LEED-TS-Indoor-FEB2020.pdf

Instructions d'entretien

Pour le guide d'entretien complet, consultez :
https://www.tarkettsportsindoor.com/wp-content/uploads/2021/03/Omnisports-Care-and-Maintenance-DEC2020.pdf

Méthodes de pose

- GreenLay™ : la méthode de pose GreenLay™ avec adhésif périmétrique permet de ne coller que 2 % de la surface avec la colle Multi-Poxy sans solvant de Tarkett (tolérance à l'humidité : humidité relative de 92 % conformément à la norme ASTM F2170).
- Entièrement collée : pose avec colle Multi-Poxy, HS Sport Spray ou acrylique Multi-Set de Tarkett sur toute la surface (tolérance à l'humidité : 98 % de HR avec la colle Multi-Poxy, 90 % de HR avec la colle HS Sport Spray, 83 % avec la colle acrylique Multi-Set conformément à la norme ASTM F2170).
- Tarkolay : installation avec membrane étanche et colle acrylique Multi-Poxy (aucun essai d'humidité requis).

Tarkett SPORTS INDOOR

Couleurs disponibles

Pure Maple

Pure Oak*

Sapphire

Topaz

Turquoise

Graphite

Garnet

Amber

Coral

Citrine

Jade

Emerald

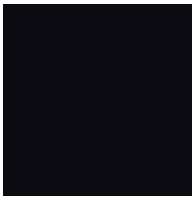
Onyx

*Ce modèle comprend des planches de 3 po de largeur. Les autres modèles de bois ont une largeur de 2 1/4 po.

Couleurs présentées à des fins de représentation seulement. L'utilisation d'un véritable échantillon est recommandée pour évaluer la couleur réelle et effectuer l'agencement.

888.364.6541
tarkettsportsindoor.com

Tarkett SPORTS INDOOR

SECTION 09 65 66
ARCHITECTURAL SPECIFICATIONS FOR INDOOR RESILIENT ATHLETIC SURFACING

PART 1 – GENERAL

1.1 *SECTION INCLUDES*

A. Supply and installation of the indoor resilient multipurpose surfacing
B. Application of the game lines
C. References for the correct construction and preparation of concrete slabs to receive resilient flooring.

1.2 *SUBMITTALS*

A. Product Data:
Manufacturer's promotional brochures, specifications and installation instructions
B. Samples:
1. Submit for selection and approval three (3) sets of the indoor resilient multipurpose surfacing, manufacturer's brochures, samples or sample boards of all of the available colors, textures and styles.
2. Submit color samples of all the available game line paint colors for selection and approval.
C. Closeout Submittals:
1. Submit three (3) copies of the indoor resilient multipurpose surfacing and manufacturer's maintenance instructions.
2. Submit three (3) copies of the material and installation warranties as specified.

1.3 *QUALITY ASSURANCE*

A. Qualifications:
1. The indoor resilient multipurpose surfacing shall have been actively marketed for a minimum of five (5) years.
2. The indoor resilient multipurpose surfacing shall be manufactured in an ISO 9001 certified plant.
3. The indoor resilient multipurpose surfacing supplier shall be an established firm experienced in the field and appointed as a distributor by the manufacturer of the indoor resilient multipurpose surfacing.
4. The installer of the indoor resilient multipurpose surfacing shall have a minimum of five (5) years experience in the field installing indoor resilient multipurpose surfacing and have worked on at least five (5) projects of similar size, type and complexity.
B. Certifications:
1. Installer to submit the indoor resilient athletic surfacing manufacturer's or distributor's certification attesting that they are an approved installer of the indoor resilient multipurpose surfacing.
C. Testing:
Tests shall be relative for multi-purpose use with certificates from independent testing resources to be made available upon request. Test results shall be no more than 5 years old and performed according to ASTM and/or EN standard testing procedures.

1.4 *DELIVERY, STORAGE AND HANDLING*

A. Delivery:
Material shall not be delivered until all related work is in place and finished and/or proper storage facilities and conditions can be provided and guaranteed stable according to FieldTurf USA, Inc. recommendations.

B. Storage:
Store the material in a secure, clean and dry location. Maintain temperature between 55° and 85° Fahrenheit. Store the indoor resilient athletic surfacing on a clean flat surface. Do not stack rolls.

1.5 *PROJECT/SITE CONDITIONS*

A. It is the responsibility of the general contractor/construction manager to maintain project/site conditions acceptable for the installation of the indoor resilient multipurpose flooring.

B. The area in which the indoor resilient multipurpose surfacing will be installed shall be dry and weather tight. Permanent heat, light and ventilation shall be installed and operable.

C. All other trades shall have completed their work prior to the installation of the resilient athletic flooring. The general contractor or Construction Manager shall maintain a secure and clean working environment before, during and after the installation. Suspension of other trades' work may be authorized providing their work will not damage the new flooring.

D. Maintain a stable room temperature of at least 65°F for a minimum of one (1) week prior to, during and thereafter installation.

E. An effective low-permeance vapor barrier is placed directly beneath the concrete subfloor. For "on" or "below grade" installations, it is recommended to provide a permanent vapor barrier resistant to long term hydrostatic pressure/moisture exposure. Protrusions should be sealed to prevent moisture migration into the slab. Moisture should not be allowed to enter the slab after the completed construction.

F. Concrete subfloor surface pH level within the 7 to 9 range dependent upon installation type.

G. Concrete subfloor should be no greater than 1/8" within a 10 ft diameter. This tolerance can be measured in accordance with ASTM E1155.
A specified (F_F) of 50 and an (F_L) of 30 should reach this degree of floor flatness and floor level. There is no numerical correlation between F numbers and the deviation from the straight edge, however the above specified numbers should achieve a flat floor with minimal deviation in the slab. Reference ACI 117 and ACI 302.1R. The general contractor should provide a certificate of compliance with the above recommendations.

H. Concrete subfloor must be clean and free of all foreign materials or objects including, but not limited to, curing compounds and sealers.

I. Fill cracks, grooves, voids, depressions, and other minor imperfections with Ardex (or equal) cement-based patching/leveling compounds. Follow the manufacturer's directions. Moveable joints must be treated utilizing specific transitioning joint devices depending upon the architect's recommendations.

Follow current ASTM F710 guidelines for the preparation of concrete slabs to receive resilient flooring.

J. Refer to ACI 302.2R "Guidelines for Concrete Slabs that Receive Moisture-Sensitive Flooring Materials" for concrete design and construction.

K. Concrete slab shall be fortified with continual steel reinforcement. Fiber reinforcement alone shall not be considered adequate fortification.

1.6 *WARRANTY*

A. Materials:
The indoor resilient athletic surfacing shall be covered by the manufacturer against product defects for 5 years.

B. Installation:
The installation of the indoor resilient multipurpose surfacing shall be covered against poor workmanship and faulty installation by a two (2) year written, limited warranty provided by the contractor performing/overseeing the installation.

1.7 *ADDITIONAL MATERIALS*

Furnish to the owner additional materials containing a total of at least 1% of each different color or design of the indoor resilient athletic surfacing used on the project.

1.8 *LEED™ CERTIFICATION*

The indoor resilient athletic surfacing should be able to help this facility to achieve points towards *LEED™ certification.*

LEED categories positively affected by the indoor resilient athletic surfacing:

Product Type			Rubber
Building Reuse Maintain Interior Nonstructural Elements	MR 1.2	Renovation	1
Construction Waste Management	MR 2	Renovation	2
Construction Waste Management Materials Reuse	MR 3 5 % - 1 point 10% - 2 points	Renovation	2
Recycled Content	MR 4 20% - 2 points	New/Renovation	2
Regional Materials	MR5	New/Renovation	2
Indoor Environmental Air Quality Low VOC Adhesives/Sealants	IEQ 4.1	New/Renovation	1
Low-emitting Materials Paints and Coatings	IEQ 4.2	New/Renovation	1

PART 2 - PRODUCTS

2.1 *MANUFACTURERS*

The basis of the design for the indoor resilient multipurpose surfacing is Dropzone: Droptile as provided by FieldTurf USA, Inc. All other installation accessories and related components must be either made or approved by the indoor resilient athletic surfacing manufacturer. Other products may be approved as equal if deemed qualified and submitted in accordance with the General Conditions. Test reports confirming compliance from an Independent Sports Laboratory must be provided along with samples, technical data, installation, maintenance, and warranty prior to acceptance as an alternative product.

2.2 *MATERIALS.*

Dropzone: Droptile 1" thick configuration consists of a high density, wear surface; cylindrical support feet that allow underside cable routing, maximum resiliency, and water drainage, as well as twelve molded perimeter dowel holes that accept specially designed barbed dowel pins to promote ease of installation.

1. Physical properties of the indoor resilient athletic surfacing shall conform to the following minimums:

Tile Dimension	…….	24" x 24"
Total Thickness	…….	2.5"
Weight	…….	4.0 lbs/sq.ft.
Tensile Strength	ASTM D412	200 minimum
Static Load	ASTM F970	400 p.s.i (modified test)
Coefficient of Friction	ASTM 2047	>.9
Chemical Resistance	ASTM F925	Excellent
Ambient Noise Reduction	ASTM C423	.10
Impact Sound Insulation	ASTM E492	.45 minimum
Thermal Conductivity	ASTM C518	Approximate .406
Sound Transmission	ASTM E413	51

1. Color: As available from the indoor resilient athletic surfacing manufacturer's standard range.

PART 3 - EXECUTION

3.1 *EXAMINATION*

A. It is the responsibility of the general contractor/construction manager to ensure that project/site conditions are acceptable for the installation of the indoor resilient athletic flooring.
B. Verify that the area in which the indoor resilient athletic surfacing will be installed is dry and weather tight. Verify that permanent heat, light and ventilation is installed and operable.
C. Verify that all other work that could cause damage, dirt and dust or interrupt the normal pace of the indoor resilient athletic flooring installation is completed or suspended.
D. Verify that there is a stable room temperature of at least 65°F.

E. Verify that there are no foreign materials or objects on the subfloor and that the subfloor is clean and ready for installation.
F. Document the results indicating the slab is within manufacturer's tolerances for slab deviation.

3.2 *PREPARATION OF SURFACES*

A. Sand the entire surface of the concrete slab.
B. Sweep the concrete slab so as to remove all dirt and dust. If a sweeping compound is to be used it must be a sweeping compound that does not contain oil or other items that may inhibit the adhesive bond.
C. Slab must be dust free. In the event that dust impairs adhesive bond, priming the slab prior to application of adhesive may be necessary. Follow installation guidelines.

3.3 *INSTALLATION*

A. The installation area shall be closed to all traffic and activity for a period to be set by the indoor resilient athletic surfacing installer. The indoor resilient athletic surfacing installation shall not begin until the installer is familiar with the existing conditions.
B. All necessary precautions should be taken to minimize noise, smell, dust, the use of hazardous materials and any other items that may inconvenience others.
C. Install the indoor resilient athletic surfacing in strict accordance with the indoor resilient athletic surfacing manufacturer's written instructions.
D. Install the indoor resilient athletic surfacing minimizing cross seams. Provide a seam diagram during the submittal process for approval prior to installation.
E. Install appropriate threshold plates or transition strips where necessary.

3.5 *CLEANING*

A. Remove all unused materials, tools, and equipment and dispose of any debris properly. Clean the indoor resilient athletic surfacing in accordance with the manufacturer's instructions.

3.6 *PROTECTION*

If required, protect the indoor resilient athletic surfacing from damage using coverings approved by the manufacturer until acceptance of work by the customer or their authorized representative.

3.6 RELATED STANDARDS AND GUIDELINES

A. ASTM F710 "Standard Practice for Preparing Concrete Floors to Receive Resilient Flooring"
B. ACI 302.2R-06 "Guideline for Concrete Slabs that Receive Moisture-Sensitive Flooring Materials"

END OF SECTION

SECTION 09 65 66
ARCHITECTURAL SPECIFICATIONS FOR INDOOR RESILIENT ATHLETIC SURFACING

PART 1 – GENERAL

1.1 *SECTION INCLUDES*

A. Supply and installation of the indoor resilient multipurpose surfacing
B. Application of the game lines
C. References for the correct construction and preparation of concrete slabs to receive resilient flooring.

1.2 *SUBMITTALS*

A. Product Data:
Manufacturer's promotional brochures, specifications and installation instructions
B. Samples:
1. Submit for selection and approval three (3) sets of the indoor resilient multipurpose surfacing, manufacturer's brochures, samples or sample boards of all of the available colors, textures and styles.
2. Submit color samples of all the available game line paint colors for selection and approval.
C. Closeout Submittals:
1. Submit three (3) copies of the indoor resilient multipurpose surfacing and manufacturer's maintenance instructions.
2. Submit three (3) copies of the material and installation warranties as specified.

1.3 *QUALITY ASSURANCE*

A. Qualifications:
1. The indoor resilient multipurpose surfacing shall have been actively marketed for a minimum of five (5) years.
2. The indoor resilient multipurpose surfacing shall be manufactured in an ISO 9001 certified plant.
3. The indoor resilient multipurpose surfacing supplier shall be an established firm experienced in the field and appointed as a distributor by the manufacturer of the indoor resilient multipurpose surfacing.
4. The installer of the indoor resilient multipurpose surfacing shall have a minimum of five (5) years experience in the field installing indoor resilient multipurpose surfacing and have worked on at least five (5) projects of similar size, type and complexity.
B. Certifications:
1. Installer to submit the indoor resilient athletic surfacing manufacturer's or distributor's certification attesting that they are an approved installer of the indoor resilient multipurpose surfacing.
C. Testing:
Tests shall be relative for multi-purpose use with certificates from independent testing resources to be made available upon request. Test results shall be no more than 5 years old and performed according to ASTM and/or EN standard testing procedures.

1.4 *DELIVERY, STORAGE AND HANDLING*

A. Delivery:
Material shall not be delivered until all related work is in place and finished and/or proper storage facilities and conditions can be provided and guaranteed stable according to FieldTurf USA, Inc. recommendations.

B. Storage:
Store the material in a secure, clean and dry location. Maintain temperature between 55° and 85° Fahrenheit. Store the indoor resilient athletic surfacing on a clean flat surface. Do not stack rolls.

1.5 *PROJECT/SITE CONDITIONS*

A. It is the responsibility of the general contractor/construction manager to maintain project/site conditions acceptable for the installation of the indoor resilient multipurpose flooring.

B. The area in which the indoor resilient multipurpose surfacing will be installed shall be dry and weather tight. Permanent heat, light and ventilation shall be installed and operable.

C. All other trades shall have completed their work prior to the installation of the resilient athletic flooring. The general contractor or Construction Manager shall maintain a secure and clean working environment before, during and after the installation. Suspension of other trades' work may be authorized providing their work will not damage the new flooring.

D. Maintain a stable room temperature of at least 65°F for a minimum of one (1) week prior to, during and thereafter installation.

E. An effective low-permeance vapor barrier is placed directly beneath the concrete subfloor. For "on" or "below grade" installations, it is recommended to provide a permanent vapor barrier resistant to long term hydrostatic pressure/moisture exposure. Protrusions should be sealed to prevent moisture migration into the slab. Moisture should not be allowed to enter the slab after the completed construction.

F. Concrete subfloor surface pH level within the 7 to 9 range dependent upon installation type.

G. Concrete subfloor should be no greater than 1/8" within a 10 ft diameter. This tolerance can be measured in accordance with ASTM E1155.
A specified (F_F) of 50 and an (F_L) of 30 should reach this degree of floor flatness and floor level. There is no numerical correlation between F numbers and the deviation from the straight edge, however the above specified numbers should achieve a flat floor with minimal deviation in the slab. Reference ACI 117 and ACI 302.1R. The general contractor should provide a certificate of compliance with the above recommendations.

H. Concrete subfloor must be clean and free of all foreign materials or objects including, but not limited to, curing compounds and sealers.

I. Fill cracks, grooves, voids, depressions, and other minor imperfections with Ardex (or equal) cement-based patching/leveling compounds. Follow the manufacturer's directions. Moveable joints must be treated utilizing specific transitioning joint devices depending upon the architect's recommendations.

Follow current ASTM F710 guidelines for the preparation of concrete slabs to receive resilient flooring.

J. Refer to ACI 302.2R "Guidelines for Concrete Slabs that Receive Moisture-Sensitive Flooring Materials" for concrete design and construction.

K. Concrete slab shall be fortified with continual steel reinforcement. Fiber reinforcement alone shall not be considered adequate fortification.

1.6 *WARRANTY*

A. Materials:
The indoor resilient athletic surfacing shall be covered by the manufacturer against product defects for 15 years.

B. Installation:
The installation of the indoor resilient multipurpose surfacing shall be covered against poor workmanship and faulty installation by a two (2) year written, limited warranty provided by the contractor performing/overseeing the installation.

1.7 *ADDITIONAL MATERIALS*

Furnish to the owner additional materials containing a total of at least 1% of each different color or design of the indoor resilient athletic surfacing used on the project.

1.8 *LEED™ CERTIFICATION*

The indoor resilient athletic surfacing should be able to help this facility to achieve points towards *LEED™ certification.*

LEED categories positively affected by the indoor resilient athletic surfacing:

Product Type			Rubber
Building Reuse Maintain Interior Nonstructural Elements	MR 1.2	Renovation	1
Construction Waste Management	MR 2	Renovation	2
Construction Waste Management Materials Reuse	MR 3 5 % - 1 point 10% - 2 points	Renovation	2
Recycled Content	MR 4 20% - 2 points	New/Renovation	2
Regional Materials	MR5	New/Renovation	2
Indoor Environmental Air Quality Low VOC Adhesives/Sealants	IEQ 4.1	New/Renovation	1
Low-emitting Materials Paints and Coatings	IEQ 4.2	New/Renovation	1

PART 2 - PRODUCTS

2.1 *MANUFACTURERS*

The basis of the design for the indoor resilient multipurpose surfacing is Dropzone: Droptile as provided by FieldTurf USA, Inc. All other installation accessories and related components must be either made or approved by the indoor resilient athletic surfacing manufacturer. Other products may be approved as equal if deemed qualified and submitted in accordance with the General Conditions. Test reports confirming compliance from an Independent Sports Laboratory must be provided along with samples, technical data, installation, maintenance, and warranty prior to acceptance as an alternative product.

2.2 *MATERIALS.*

Dropzone: Droptile 1" thick configuration consists of a high density, wear surface; cylindrical support feet that allow underside cable routing, maximum resiliency, and water drainage, as well as twelve molded perimeter dowel holes that accept specially designed barbed dowel pins to promote ease of installation.

1. Physical properties of the indoor resilient athletic surfacing shall conform to the following minimums:

Tile Dimension	…….	24" x 24"
Total Thickness	…….	1"
Weight	…….	4.0 lbs/sq.ft.
Tensile Strength	ASTM D412	200 minimum
Static Load	ASTM F970	400 p.s.i (modified test)
Coefficient of Friction	ASTM 2047	>.9
Chemical Resistance	ASTM F925	Excellent
Ambient Noise Reduction	ASTM C423	.10
Impact Sound Insulation	ASTM E492	.45 minimum
Thermal Conductivity	ASTM C518	Approximate .406
Sound Transmission	ASTM E413	51

1. Color: As available from the indoor resilient athletic surfacing manufacturer's standard range.

PART 3 - EXECUTION

3.1 *EXAMINATION*

A. It is the responsibility of the general contractor/construction manager to ensure that project/site conditions are acceptable for the installation of the indoor resilient athletic flooring.
B. Verify that the area in which the indoor resilient athletic surfacing will be installed is dry and weather tight. Verify that permanent heat, light and ventilation is installed and operable.
C. Verify that all other work that could cause damage, dirt and dust or interrupt the normal pace of the indoor resilient athletic flooring installation is completed or suspended.
D. Verify that there is a stable room temperature of at least 65°F.

E. Verify that there are no foreign materials or objects on the subfloor and that the subfloor is clean and ready for installation.
F. Document the results indicating the slab is within manufacturer's tolerances for slab deviation.

3.2 *PREPARATION OF SURFACES*

A. Sand the entire surface of the concrete slab.
B. Sweep the concrete slab so as to remove all dirt and dust. If a sweeping compound is to be used it must be a sweeping compound that does not contain oil or other items that may inhibit the adhesive bond.
C. Slab must be dust free. In the event that dust impairs adhesive bond, priming the slab prior to application of adhesive may be necessary. Follow installation guidelines.

3.3 *INSTALLATION*

A. The installation area shall be closed to all traffic and activity for a period to be set by the indoor resilient athletic surfacing installer. The indoor resilient athletic surfacing installation shall not begin until the installer is familiar with the existing conditions.
B. All necessary precautions should be taken to minimize noise, smell, dust, the use of hazardous materials and any other items that may inconvenience others.
C. Install the indoor resilient athletic surfacing in strict accordance with the indoor resilient athletic surfacing manufacturer's written instructions.
D. Install the indoor resilient athletic surfacing minimizing cross seams. Provide a seam diagram during the submittal process for approval prior to installation.
E. Install appropriate threshold plates or transition strips where necessary.

3.5 *CLEANING*

A. Remove all unused materials, tools, and equipment and dispose of any debris properly. Clean the indoor resilient athletic surfacing in accordance with the manufacturer's instructions.

3.6 *PROTECTION*

If required, protect the indoor resilient athletic surfacing from damage using coverings approved by the manufacturer until acceptance of work by the customer or their authorized representative.

3.6 RELATED STANDARDS AND GUIDELINES

A. ASTM F710 "Standard Practice for Preparing Concrete Floors to Receive Resilient Flooring"
B. ACI 302.2R-06 "Guideline for Concrete Slabs that Receive Moisture-Sensitive Flooring Materials"

END OF SECTION

SECTION 09 65 66
ARCHITECTURAL SPECIFICATIONS FOR INDOOR RESILIENT ATHLETIC SURFACING

PART 1 – GENERAL

1.1 *SECTION INCLUDES*

A. Supply and installation of the indoor multipurpose surfacing
B. References for the correct construction and preparation of concrete slabs to receive resilient flooring.

1.2 *SUBMITTALS*

A. Product Data:
   1. Manufacturer's promotional brochures, specifications and installation instructions
B. Manufacturer Certifications:
   1. Provide certification that accurately identifies the Original Equipment Manufacturer (OEM) of flooring furnished for this project including manufacturer's name, address and factory location.
   2. Suppliers of private label flooring for this project must identify themselves as such and fully disclose the OEM information listed above.
   3. All "manufacturer" requirements in these specifications must be complied with by the OEM, including warranties, certifications, qualifications, product data, test results, environmental requirements, performance data, etc.
C. Samples:
   1. Submit for selection and approval three (3) sets of the indoor resilient multipurpose surfacing, manufacturer's brochures, samples or sample boards of all of the available colors, textures and styles.
   2. Submit color samples of all the available game line paint colors for selection and approval.
D. Closeout Submittals:
   1. Submit three (3) copies of the indoor resilient multipurpose surfacing and manufacturer's maintenance instructions.
   2. Submit three (3) copies of the material and installation warranties as specified.

1.3 *QUALITY ASSURANCE*

A. Qualifications:
   1. The indoor multipurpose surfacing supplier shall be an established firm, experienced in the field, and competent in the techniques required by the manufacturer.
   2. The installer of the indoor resilient multipurpose surfacing shall have a minimum of five (5) years of experience in the field installing indoor resilient multipurpose surfacing and have worked on at least five (5) projects of similar size, type and complexity.

B. Certifications:
   1. Installer to submit the manufacturer's certification attesting that they are a trained installer of the indoor resilient multipurpose surfacing.

C. Testing:
   1. Tests shall be relative for multi-purpose use with certificates from independent testing resources to be made available upon request.
   2. Test results shall be no more than 5 years old and performed according to ASTM standard testing procedures.

1.4 *DELIVERY, STORAGE AND HANDLING*

A. Delivery:
   Material shall not be delivered until all related work is in place and finished and/or proper storage facilities and conditions can be provided and guaranteed stable according to FieldTurf USA, Inc. recommendations.

B. Storage:
   1. Store the material in a secure, clean and dry location.
   2. Maintain temperature between 55° and 85° Fahrenheit.

1.5 *PROJECT/SITE CONDITIONS*

A. It is the responsibility of the general contractor/construction manager to maintain project/site conditions acceptable for the installation of the indoor multipurpose flooring.

B. The area in which the surfacing will be installed shall be dry and weather tight. Permanent heat, light and ventilation shall be installed and operable.

C. All other trades shall have completed their work prior to the installation of the resilient athletic flooring. The general contractor or construction manager shall maintain a secure and clean working environment before, during and after the installation.

D. Maintain a stable room temperature of at least 65°F for a minimum of one (1) week prior to, during and thereafter installation.

E. An effective low-permeance vapor barrier is placed directly beneath the concrete subfloor. For "on" or "below grade" installations, it is recommended to provide a permanent vapor barrier resistant to long term hydrostatic pressure/moisture exposure. Protrusions should be sealed to prevent moisture migration into the slab. Moisture should not be allowed to enter the slab after the completed construction.

F. Concrete subfloor surface pH level within the 7 to 10 range dependent upon installation type.

G. Concrete subfloor should be no greater than 1/8" within a 10 ft diameter. This tolerance can be measured in accordance with ASTM E1155. A specified (F_F) of 50 and an (F_L) of 30 should reach this degree of floor flatness and floor level. There is no numerical correlation between F numbers and the deviation from the straight edge. However, the above specified numbers should achieve a flat floor with minimal deviation in the slab. Reference ACI 117 and ACI 302.1R. The general contractor should provide a certificate of compliance with the above recommendations.

H. Concrete subfloor must be clean and free of all foreign materials or objects including, but not limited to, curing compounds and sealers.

I. Fill cracks, grooves, voids, depressions, and other minor imperfections. Follow the manufacturer's directions. Moveable joints must be treated utilizing specific transitioning joint devices depending upon the architect's recommendations. Follow

current ASTM F710 guidelines for the preparation of concrete slabs to receive resilient flooring.

J. Refer to ACI 302.2R "Guidelines for Concrete Slabs that Receive Moisture-Sensitive Flooring Materials" for concrete design and construction.
K. Concrete slab shall be fortified with continual steel reinforcement. Fiber reinforcement alone shall not be considered adequate fortification.

1.6 *WARRANTY*

A. Prorated Warranty: Product defects are warranted for 5 years.

1.7 *ADDITIONAL MATERIALS*

A. Furnish to the owner additional materials containing a total of at least 1% of each different color or design of the indoor surfacing used on the project.

PART 2 - PRODUCTS

2.1 *MANUFACTURERS*

A. The basis of the design for the indoor resilient multipurpose surfacing is Dropturf provided by Tarkett Sports.
B. All other installation accessories and related components must be either made or approved by the manufacturer.
C. Other products may be approved as equal if deemed qualified and submitted in accordance with the General Conditions.

2.2 *MATERIALS*

A. Dropturf and provided by Tarkett Sports. Dropturf is a synthetic cushioned non-fill turf system that is fully adhered.
B. Physical properties of the surfacing shall conform to the following minimums:

Property	Value	Units	Description
Pile Yarn Type	UV-resistant polyethylene		n/a
Yarn Structure	Slit-Film/Thatch		n/a
Yarn Denier	10000/5000	Denier	D1577
Pile Height	0.75	inches	D5823
Pile Weight	40	oz/yd^2	D5848
Primary Backing Weight	8+	oz/yd^2	D5848
Secondary Backing Weight (Perforated)	20+	oz/yd^2	D5848
5mm Attached Foam Pad	61	oz/yd^2	
Total Carpet & Pad Weight	129	oz/yd^2	D5848
Stitch Gauge	3/16 inch centers		D5793
Tuft Bind	8+	lbs/force	D1335
Pill Burn Test	Pass		D2859

Attached Pad	5	mm	

1. Color: As available from the manufacturer's standard range.
2. Texture: Texture to remain consistent when blending colors.

C. Adhesive: As approved by the manufacturer.

PART 3 - EXECUTION

3.1 *EXAMINATION*

A. It is the responsibility of the general contractor/construction manager to ensure that project/site conditions are acceptable for the installation.
B. Verify that the area in which the surfacing will be installed is dry and weather tight. Verify that permanent heat, light and ventilation are installed and operable.
C. Verify that all other work that could cause damage, dirt and dust or interrupt the normal pace of the indoor resilient athletic flooring installation is completed or suspended.
D. Verify that there is a stable room temperature of at least 65◦F.
E. Verify that there are no foreign materials or objects on the subfloor and that the subfloor is clean and ready for installation.
F. *Adhesive moisture tolerances are dependent upon the adhesive type used.*
G. Follow Fieldturf USA, Inc. installation recommendations.
H. Do not average the results of the tests. Report all field test results in writing to the General Contractor, Architect, and End User prior to installation.
I. Verify that the concrete subfloor surface pH level is within the 7 - 10 range.
J. Document the results confirming the slab is within manufacturer's tolerances for slab deviation.

3.2 *PREPARATION OF SURFACES*

A. Sand the entire surface of the concrete slab.
B. Sweep the concrete slab so as to remove all dirt and dust. If a sweeping compound is to be used it must be a sweeping compound that does not contain oil or other items that may inhibit the adhesive bond.
C. Slab must be dust free. In the event that dust impairs adhesive bond, priming the slab prior to application of adhesive may be necessary. Follow installation guidelines.
D. Follow OSHA guidelines.

3.3 *INSTALLATION*

A. The installation area shall be closed to all traffic and activity for a period to be set by the indoor resilient athletic surfacing installer. The surfacing installation shall not begin until the installer is familiar with the existing conditions.
B. All necessary precautions should be taken to minimize noise, smell, dust, the use of hazardous materials and any other items that may inconvenience others.
C. Install the surfacing in strict accordance with the manufacturer's written instructions.
D. Install the surfacing minimizing cross seams. Provide a seam diagram during the submittal process for approval prior to installation.
E. Install appropriate threshold plates or transition strips where necessary.

2.0 *CLEANING*

A. Remove all unused materials, tools, and equipment and dispose of any debris properly.

3.6 *PROTECTION*

A. If required, protect the surfacing from damage using coverings approved by the manufacturer until acceptance of work by the customer or their authorized representative.

3.7 *RELATED STANDARDS AND GUIDELINES*

A. ASTM F2170 "Standard Test Method for Determining Relative Humidity In Concrete Floor Slabs Using In-Situ Probes"
B. ASTM F710 "Standard Practice for Preparing Concrete Floors to Receive Resilient Flooring"
C. ACI 302.2R-06 "Guideline for Concrete Slabs that Receive Moisture-Sensitive Flooring Materials"
D. ASTM F2772-11 "Standard Specification for Athletic Performance Properties of Indoor Sports Floor Systems"

END OF SECTION

SECTION 09 65 66
ARCHITECTURAL SPECIFICATIONS FOR INDOOR RESILIENT ATHLETIC SURFACING

PART 1 – GENERAL

1.1 *SECTION INCLUDES*

A. Supply and installation of the indoor resilient multipurpose surfacing
B. Application of the game lines
C. References for the correct construction and preparation of concrete slabs to receive resilient flooring.

1.2 *SUBMITTALS*

A. Product Data:

Manufacturer's promotional brochures, specifications and installation instructions

B. Samples:

1. Submit for selection and approval three (3) sets of the indoor resilient multipurpose surfacing, manufacturer's brochures, samples or sample boards of all of the available colors, textures and styles.
2. Submit color samples of all the available game line paint colors for selection and approval.

C. Closeout Submittals:

1. Submit three (3) copies of the indoor resilient multipurpose surfacing and manufacturer's maintenance instructions.
2. Submit three (3) copies of the material and installation warranties as specified.

1.3 *QUALITY ASSURANCE*

A. Qualifications:

1. The indoor resilient multipurpose surfacing shall have been actively marketed for a minimum of five (5) years.
2. The indoor resilient multipurpose surfacing shall be manufactured in an ISO 9001 certified plant.
3. The indoor resilient multipurpose surfacing supplier shall be an established firm experienced in the field and appointed as a distributor by the manufacturer of the indoor resilient multipurpose surfacing.
4. The installer of the indoor resilient multipurpose surfacing shall have a minimum of five (5) years experience in the field installing

indoor resilient multipurpose surfacing and have worked on at least five (5) projects of similar size, type and complexity.

B. Certifications:

Installer to submit the indoor resilient athletic surfacing manufacturer's or distributor's certification attesting that they are an approved installer of the indoor resilient multipurpose surfacing.

C. Testing:

Tests shall be relative for multi-purpose use with certificates from independent testing resources to be made available upon request. Test results shall be no more than 5 years old and performed according to ASTM and/or EN standard testing procedures.

1.4 *DELIVERY, STORAGE AND HANDLING*

A. Delivery:

Material shall not be delivered until all related work is in place and finished and/or proper storage facilities and conditions can be provided and guaranteed stable according to Tarkett Sports' recommendations.

B. Storage:

Store the material in a secure, clean and dry location. Maintain temperature between 65° and 85° Fahrenheit. Store the indoor resilient athletic surfacing on a clean flat surface.

1.5 *PROJECT/SITE CONDITIONS*

A. It is the responsibility of the general contractor/construction manager to maintain project/site conditions acceptable for the installation of the indoor resilient multipurpose flooring.
B. The area in which the indoor resilient multipurpose surfacing will be installed shall be dry and weather tight. Permanent heat, light and ventilation shall be installed and operable.
C. All other trades shall have completed their work prior to the installation of the resilient athletic flooring. The general contractor or Construction Manager shall maintain a secure and clean working environment before, during and after the installation. Suspension of other trades' work may be authorized providing their work will not damage the new flooring.

D. Maintain a stable room temperature of at least 65°F for a minimum of one (1) week prior to, during and thereafter installation.
E. An effective low-permeance vapor barrier is placed directly beneath the concrete subfloor. For "on" or "below grade" installations, it is recommended to provide a permanent vapor barrier resistant to long term hydrostatic pressure/moisture exposure. Protrusions should be sealed to prevent moisture migration into the slab. Moisture should not be allowed to enter the slab after the completed construction.
F. Concrete subfloor surface pH level within the 7 to 9 range dependent upon installation type.
G. Concrete subfloor should be no greater than 1/8" within a 10 ft diameter. This tolerance can be measured in accordance with ASTM E1155.
   A specified (F_F) of 50 and an (F_L) of 30 should reach this degree of floor flatness and floor level. There is no numerical correlation between F numbers and the deviation from the straight edge, however the above specified numbers should achieve a flat floor with minimal deviation in the slab. Reference ACI 117 and ACI 302.1R. The general contractor should provide a certificate of compliance with the above recommendations.
H. Concrete subfloor must be clean and free of all foreign materials or objects including, but not limited to, curing compounds and sealers.
I. Fill cracks, grooves, voids, depressions, and other minor imperfections with Ardex (or equal) cement-based patching/leveling compounds. Follow the manufacturer's directions. Moveable joints must be treated utilizing specific transitioning joint devices depending upon the architect's recommendations. Follow current ASTM F710 guidelines for the preparation of concrete slabs to receive resilient flooring.
J. Refer to ACI 302.2R "Guidelines for Concrete Slabs that Receive Moisture-Sensitive Flooring Materials" for concrete design and construction.
K. Concrete slab shall be fortified with continual steel reinforcement. Fiber reinforcement alone shall not be considered adequate fortification.

1.6 *WARRANTY*

A. Materials:

   The indoor resilient athletic surfacing shall be covered by the manufacturer against product defects for 3 years.

B. Installation:

   The installation of the indoor resilient multipurpose surfacing shall be covered against poor workmanship and faulty installation by a two (2)

year written, limited warranty provided by the contractor performing/overseeing the installation.

1.7 *ADDITIONAL MATERIALS*

Furnish to the owner additional materials containing a total of at least 1% of each different color or design of the indoor resilient athletic surfacing used on the project.

1.8 *LEED™ CERTIFICATION*

The indoor resilient athletic surfacing should be able to help this facility to achieve points towards *LEED™ certification.*

LEED categories positively affected by the indoor resilient athletic surfacing:

Product Type			Rubber
Total Potential Credits			12
Building Reuse Maintain Interior Nonstructural Elements	**MR 1.2**	Renovation	1
Construction Waste Management	**MR 2**	Renovation	2
Construction Waste Management Materials Reuse	**MR 3** **5 % - 1 point** **10% - 2 points**	Renovation	2
Recycled Content	**MR 4** **20% - 2 points**	New/Renovation	2
Regional Materials	**MR5**	New/Renovation	2
Indoor Environmental Air Quality Low VOC Adhesives/Sealants	**IEQ 4.1**	New/Renovation	1
Low-emitting Materials Paints and Coatings	**IEQ 4.2**	New/Renovation	1
Low-Emitting Materials Composite Wood and Agrifiber Products	**IEQ 4.4** **Plywood Substructures** **Wood and Combi-Systems**	New/Renovation	1

PART 2 - PRODUCTS

2.1 *MANUFACTURERS*

The basis of the design for the indoor resilient multipurpose surfacing is **Dropzone Comfort 10.5 mm** as provided by Tarkett Sports. All other installation accessories and related components must be either made or approved by the indoor resilient athletic surfacing manufacturer. Other products may be approved as equal if deemed qualified and submitted in accordance with the General Conditions.

2.2 *MATERIALS*

Dropzone Comfort

1. Physical properties of the indoor resilient athletic surfacing shall conform to the following minimums:

Width	—	4 ft.
Total Thickness	—	10.5 mm
Wear Layer Thickness	—	2.5 mm
Weight	—	2.34 lbs./sq.ft.
Coefficient of Friction	ASTM D2047	>.9
Static Load	ASTM F970	.004″
CA Section 01350 Compliance	ASTM D5116	Passed
Noise Reduction	ASTM D3389	<0.1g, 100 cycles
Abrasion Resistance	ASTM E492-04	54
Chemical Resistance	ASTM F925	Good
Force Reduction	ASTM F2772	Class 1
Vertical Deformation	ASTM F2772	.5mm
Thermal Conductivity	ASTM C518	>0.4

1. Color: As available from the indoor resilient athletic surfacing manufacturer's standard range.
2. Adhesive: As approved by the indoor resilient athletic surfacing manufacturer.

PART 3 - EXECUTION

3.1 *EXAMINATION*

A. It is the responsibility of the general contractor/construction manager to ensure that project/site conditions are acceptable for the installation of the indoor resilient athletic flooring.
B. Verify that the area in which the indoor resilient athletic surfacing will be installed is dry and weather tight. Verify that permanent heat, light and ventilation is installed and operable.
C. Verify that all other work that could cause damage, dirt and dust or interrupt the normal pace of the indoor resilient athletic flooring installation is completed or suspended.
D. Verify that there is a stable room temperature of at least 65°F.
E. Verify that there are no foreign materials or objects on the subfloor and that the subfloor is clean and ready for installation.
F. *Direct Full Spread Adhering to Concrete Subfloor with Multi-Poxy*: No higher than 98 % RH when tested per ASTM F2170. ASTM F1869 is not approved.

G. Do not average the results of the tests. Report all field test results in writing to the General Contractor, Architect, and End User prior to installation.
H. Verify that the concrete subfloor surface pH level is within the 7 - 10 range.
I. Document the results indicating the slab is within manufacturer's tolerances for slab deviation.

3.2 *PREPARATION OF SURFACES*

A. Sand the entire surface of the concrete slab.
B. Sweep the concrete slab so as to remove all dirt and dust. If a sweeping compound is to be used it must be a sweeping compound that does not contain oils or other items that may inhibit the adhesive bond. (See ASTM F710).
C. Slab must be dust free. In the event that dust impairs adhesive bond, priming the slab prior to application of adhesive may be necessary. Follow installation guidelines.

3.3 *INSTALLATION*

A. The installation area shall be closed to all traffic and activity for a period to be set by the indoor resilient athletic surfacing installer. The indoor resilient athletic surfacing installation shall not begin until the installer is familiar with the existing conditions.
B. All necessary precautions should be taken to minimize noise, smell, dust, the use of hazardous materials and any other items that may inconvenience others.
C. Install the indoor resilient athletic surfacing in strict accordance with the indoor resilient athletic surfacing manufacturer's written instructions.
D. Install the indoor resilient athletic surfacing minimizing cross seams. Provide a seam diagram during the submittal process for approval prior to installation.
E. Install appropriate threshold plates or transition strips where necessary.

3.4 *CLEANING*

A. Remove all unused materials, tools, and equipment and dispose of any debris properly. Clean the indoor resilient athletic surfacing in accordance with the manufacturer's instructions.

3.5 *PROTECTION*

If required, protect the indoor resilient athletic surfacing from damage using coverings approved by the manufacturer until acceptance of work by the customer or their authorized representative.

3.6 *RELATED STANDARDS AND GUIDELINES*

A. ASTM F1869 "Standard Test Method for Measuring Moisture Evaporation
Rate of Concrete Subfloor Using Anhydrous Calcium Chloride"
B. ASTM F2170 "Standard Test Method for Determining Relative Humidity In Concrete Floor Slabs Using In-Situ Probes"
C. ASTM F710 "Standard Practice for Preparing Concrete Floors to Receive Resilient Flooring"
D. ACI 302.2R-06 "Guideline for Concrete Slabs that Receive Moisture Sensitive Flooring Materials"

END OF SECTION

SECTION 09 65 66
ARCHITECTURAL SPECIFICATIONS FOR INDOOR RESILIENT ATHLETIC SURFACING

PART 1 – GENERAL

1.1 SECTION INCLUDES

A. Supply and installation of the indoor resilient multipurpose surfacing
B. Application of the game lines
C. References for the correct construction and preparation of concrete slabs to receive resilient flooring.

1.2 *SUBMITTALS*

A. Product Data:

Manufacturer's promotional brochures, specifications and installation instructions

B. Samples:

1. Submit for selection and approval three (3) sets of the indoor resilient multipurpose surfacing, manufacturer's brochures, samples or sample boards of all of the available colors, textures and styles.
2. Submit color samples of all the available game line paint colors for selection and approval.

C. Closeout Submittals:

1. Submit three (3) copies of the indoor resilient multipurpose surfacing and manufacturer's maintenance instructions.
2. Submit three (3) copies of the material and installation warranties as specified.

1.3 *QUALITY ASSURANCE*

A. Qualifications:

1. The indoor resilient multipurpose surfacing shall have been actively marketed for a minimum of five (5) years.
2. The indoor resilient multipurpose surfacing shall be manufactured in an ISO 9001 certified plant.
3. The indoor resilient multipurpose surfacing supplier shall be an established firm experienced in the field and appointed as a distributor by the manufacturer of the indoor resilient multipurpose surfacing.
4. The installer of the indoor resilient multipurpose surfacing shall have a minimum of five (5) years experience in the field installing

indoor resilient multipurpose surfacing and have worked on at least five (5) projects of similar size, type and complexity.

B. Certifications:

Installer to submit the indoor resilient athletic surfacing manufacturer's or distributor's certification attesting that they are an approved installer of the indoor resilient multipurpose surfacing.

C. Testing:

Tests shall be relative for multi-purpose use with certificates from independent testing resources to be made available upon request. Test results shall be no more than 5 years old and performed according to ASTM and/or EN standard testing procedures.

1.4 *DELIVERY, STORAGE AND HANDLING*

A. Delivery:

Material shall not be delivered until all related work is in place and finished and/or proper storage facilities and conditions can be provided and guaranteed stable according to Tarkett Sports' recommendations.

B. Storage:

Store the material in a secure, clean and dry location. Maintain temperature between 65° and 85° Fahrenheit. Store the indoor resilient athletic surfacing on a clean flat surface.

1.5 *PROJECT/SITE CONDITIONS*

A. It is the responsibility of the general contractor/construction manager to maintain project/site conditions acceptable for the installation of the indoor resilient multipurpose flooring.
B. The area in which the indoor resilient multipurpose surfacing will be installed shall be dry and weather tight. Permanent heat, light and ventilation shall be installed and operable.
C. All other trades shall have completed their work prior to the installation of the resilient athletic flooring. The general contractor or Construction Manager shall maintain a secure and clean working environment before, during and after the installation. Suspension of other trades' work may be authorized providing their work will not damage the new flooring.

D. Maintain a stable room temperature of at least 65°F for a minimum of one (1) week prior to, during and thereafter installation.
E. An effective low-permeance vapor barrier is placed directly beneath the concrete subfloor. For "on" or "below grade" installations, it is recommended to provide a permanent vapor barrier resistant to long term hydrostatic pressure/moisture exposure. Protrusions should be sealed to prevent moisture migration into the slab. Moisture should not be allowed to enter the slab after the completed construction.
F. Concrete subfloor surface pH level within the 7 to 9 range dependent upon installation type.
G. Concrete subfloor should be no greater than 1/8" within a 10 ft diameter. This tolerance can be measured in accordance with ASTM E1155.
   A specified (F_F) of 50 and an (F_L) of 30 should reach this degree of floor flatness and floor level. There is no numerical correlation between F numbers and the deviation from the straight edge, however the above specified numbers should achieve a flat floor with minimal deviation in the slab. Reference ACI 117 and ACI 302.1R. The general contractor should provide a certificate of compliance with the above recommendations.
H. Concrete subfloor must be clean and free of all foreign materials or objects including, but not limited to, curing compounds and sealers.
I. Fill cracks, grooves, voids, depressions, and other minor imperfections with Ardex (or equal) cement-based patching/leveling compounds. Follow the manufacturer's directions. Moveable joints must be treated utilizing specific transitioning joint devices depending upon the architect's recommendations. Follow current ASTM F710 guidelines for the preparation of concrete slabs to receive resilient flooring.
J. Refer to ACI 302.2R "Guidelines for Concrete Slabs that Receive Moisture-Sensitive Flooring Materials" for concrete design and construction.
K. Concrete slab shall be fortified with continual steel reinforcement. Fiber reinforcement alone shall not be considered adequate fortification.

1.6 *WARRANTY*

A. Materials:

   The indoor resilient athletic surfacing shall be covered by the manufacturer against product defects for 3 years.

B. Installation:

   The installation of the indoor resilient multipurpose surfacing shall be covered against poor workmanship and faulty installation by a two (2)

year written, limited warranty provided by the contractor performing/overseeing the installation.

1.7 *ADDITIONAL MATERIALS*

Furnish to the owner additional materials containing a total of at least 1% of each different color or design of the indoor resilient athletic surfacing used on the project.

1.8 *LEED™ CERTIFICATION*

The indoor resilient athletic surfacing should be able to help this facility to achieve points towards *LEED™ certification.*

LEED categories positively affected by the indoor resilient athletic surfacing:

Product Type			Rubber
Total Potential Credits			12
Building Reuse Maintain Interior Nonstructural Elements	**MR 1.2**	Renovation	1
Construction Waste Management	**MR 2**	Renovation	2
Construction Waste Management Materials Reuse	**MR 3** **5 % - 1 point** **10% - 2 points**	Renovation	2
Recycled Content	**MR 4** **20% - 2 points**	New/Renovation	2
Regional Materials	**MR5**	New/Renovation	2
Indoor Environmental Air Quality Low VOC Adhesives/Sealants	**IEQ 4.1**	New/Renovation	1
Low-emitting Materials Paints and Coatings	**IEQ 4.2**	New/Renovation	1
Low-Emitting Materials Composite Wood and Agrifiber Products	**IEQ 4.4** **Plywood Substructures** **Wood and Combi-Systems**	New/Renovation	1

PART 2 - PRODUCTS

2.1 *MANUFACTURERS*

The basis of the design for the indoor resilient multipurpose surfacing is **Dropzone Comfort 14.5 mm** as provided by Tarkett Sports. All other installation accessories and related components must be either made or approved by the indoor resilient athletic surfacing manufacturer. Other products may be approved as equal if deemed qualified and submitted in accordance with the General Conditions.

2.2 *MATERIALS*

Dropzone Comfort

Physical properties of the indoor resilient athletic surfacing shall conform to the following minimums:

Width	.....	4 ft.
Total Thickness	.....	14.5 mm
Wear Layer Thickness	.....	2.5 mm
Weight	.....	2.34 lbs/sq.ft.
Coefficient of Friction	ASTM F2772	Passed
Static Load	ASTM F970	.009″
CA Section 01350 Compliance	ASTM D5116	Passed
Noise Reduction	ASTM D3389	<0.1g, 100 cycles
Abrasion Resistance	ASTM E492-04	54
Chemical Resistance	ASTM F925	Good
Force Reduction	ASTM F2772	Class 3
Vertical Deformation	ASTM F2772	2.66mm
Thermal Conductivity	ASTM C518	>0.4

1. Color: As available from the indoor resilient athletic surfacing manufacturer's standard range.
2. Adhesive: As approved by the indoor resilient athletic surfacing manufacturer.

PART 3 - EXECUTION

3.1 *EXAMINATION*

A. It is the responsibility of the general contractor/construction manager to ensure that project/site conditions are acceptable for the installation of the indoor resilient athletic flooring.
B. Verify that the area in which the indoor resilient athletic surfacing will be installed is dry and weather tight. Verify that permanent heat, light and ventilation is installed and operable.
C. Verify that all other work that could cause damage, dirt and dust or interrupt the normal pace of the indoor resilient athletic flooring installation is completed or suspended.
D. Verify that there is a stable room temperature of at least 65°F.
E. Verify that there are no foreign materials or objects on the subfloor and that the subfloor is clean and ready for installation.

F. *Direct Full Spread Adhering to Concrete Subfloor with Multi-Poxy*: No higher than 98% RH when tested per ASTM F2170. ASTM F1869 is not approved.
G. Do not average the results of the tests. Report all field test results in writing to the General Contractor, Architect, and End User prior to installation.
H. Verify that the concrete subfloor surface pH level is within the 7 - 10 range.
I. Document the results indicating the slab is within manufacturer's tolerances for slab deviation.

3.2 *PREPARATION OF SURFACES*

A. Sand the entire surface of the concrete slab.
B. Sweep the concrete slab so as to remove all dirt and dust. If a sweeping compound is to be used it must be a sweeping compound that does not contain oils or other items that may inhibit the adhesive bond. (See ASTM F710).
C. Slab must be dust free. In the event that dust impairs adhesive bond, priming the slab prior to application of adhesive may be necessary. Follow installation guidelines.

3.3 *INSTALLATION*

A. The installation area shall be closed to all traffic and activity for a period to be set by the indoor resilient athletic surfacing installer. The indoor resilient athletic surfacing installation shall not begin until the installer is familiar with the existing conditions.
B. All necessary precautions should be taken to minimize noise, smell, dust, the use of hazardous materials and any other items that may inconvenience others.
C. Install the indoor resilient athletic surfacing in strict accordance with the indoor resilient athletic surfacing manufacturer's written instructions.
D. Install the indoor resilient athletic surfacing minimizing cross seams. Provide a seam diagram during the submittal process for approval prior to installation.
E. Install appropriate threshold plates or transition strips where necessary.

3.4 *CLEANING*

Remove all unused materials, tools, and equipment and dispose of any debris properly. Clean the indoor resilient athletic surfacing in accordance with the manufacturer's instructions.

3.5 *PROTECTION*

If required, protect the indoor resilient athletic surfacing from damage using coverings approved by the manufacturer until acceptance of work by the customer or their authorized representative.

3.6 RELATED STANDARDS AND GUIDELINES

A. ASTM F1869 "Standard Test Method for Measuring Moisture Evaporation
Rate of Concrete Subfloor Using Anhydrous Calcium Chloride"
B. ASTM F2170 "Standard Test Method for Determining Relative Humidity
In Concrete Floor Slabs Using In-Situ Probes"
C. ASTM F710 "Standard Practice for Preparing Concrete Floors to Receive Resilient Flooring"
D. ACI 302.2R-06 "Guideline for Concrete Slabs that Receive Moisture Sensitive Flooring Materials"

END OF SECTION

SECTION 09645
ARCHITECTURAL SPECIFICATIONS FOR INDOOR RESILIENT ATHLETIC SURFACING

PART 1 – GENERAL

1.1 *SECTION INCLUDES*

A. Supply and installation of the indoor resilient multipurpose surfacing
B. Application of the game lines
C. References for the correct construction and preparation of concrete slabs to receive resilient flooring.

1.2 *SUBMITTALS*

A. Product Data:
Manufacturer's promotional brochures, specifications and installation instructions
B. Samples:
1. Submit for selection and approval three (3) sets of the indoor resilient multipurpose surfacing, manufacturer's brochures, samples or sample boards of all of the available colors, textures and styles.
2. Submit color samples of all the available game line paint colors for selection and approval.
C. Closeout Submittals:
1. Submit three (3) copies of the indoor resilient multipurpose surfacing and manufacturer's maintenance instructions.
2. Submit three (3) copies of the material and installation warranties as specified.

1.3 *QUALITY ASSURANCE*

A. Qualifications:
1. The indoor resilient multipurpose surfacing shall have been actively marketed for a minimum of five (5) years.
2. The indoor resilient multipurpose surfacing shall be manufactured in an ISO 9001 certified plant.
3. The indoor resilient multipurpose surfacing supplier shall be an established firm experienced in the field and appointed as a distributor by the manufacturer of the indoor resilient multipurpose surfacing.
4. The installer of the indoor resilient multipurpose surfacing shall have a minimum of five (5) years experience in the field installing indoor resilient multipurpose surfacing and have worked on at least five (5) projects of similar size, type and complexity.
B. Certifications:
1. Installer to submit the indoor resilient athletic surfacing manufacturer's or distributor's certification attesting that they are an approved installer of the indoor resilient multipurpose surfacing.
C. Testing:
Tests shall be relative for multi-purpose use with certificates from independent testing resources to be made available upon request. Test results shall be no more than 5 years old and performed according to ASTM and/or EN standard testing procedures.

1.4 *DELIVERY, STORAGE AND HANDLING*

A. Delivery:
Material shall not be delivered until all related work is in place and finished and/or proper storage facilities and conditions can be provided and guaranteed stable according to FieldTurf USA, Inc. recommendations.

B. Storage:
Store the material in a secure, clean and dry location. Maintain temperature between 55° and 85° Fahrenheit. Store the indoor resilient athletic surfacing on a clean flat surface. Do not stack rolls.

1.5 *PROJECT/SITE CONDITIONS*

A. It is the responsibility of the general contractor/construction manager to maintain project/site conditions acceptable for the installation of the indoor resilient multipurpose flooring.

B. The area in which the indoor resilient multipurpose surfacing will be installed shall be dry and weather tight. Permanent heat, light and ventilation shall be installed and operable.

C. All other trades shall have completed their work prior to the installation of the resilient athletic flooring. The general contractor or Construction Manager shall maintain a secure and clean working environment before, during and after the installation. Suspension of other trades' work may be authorized providing their work will not damage the new flooring.

D. Maintain a stable room temperature of at least 65°F for a minimum of one (1) week prior to, during and thereafter installation.

E. An effective low-permeance vapor barrier is placed directly beneath the concrete subfloor. For "on" or "below grade" installations, it is recommended to provide a permanent vapor barrier resistant to long term hydrostatic pressure/moisture exposure. Protrusions should be sealed to prevent moisture migration into the slab. Moisture should not be allowed to enter the slab after the completed construction.

F. Concrete subfloor surface pH level within the 7 to 9 range dependent upon installation type.

G. Concrete subfloor should be no greater than 1/8" within a 10 ft diameter. This tolerance can be measured in accordance with ASTM E1155.
A specified (F_F) of 50 and an (F_L) of 30 should reach this degree of floor flatness and floor level. There is no numerical correlation between F numbers and the deviation from the straight edge, however the above specified numbers should achieve a flat floor with minimal deviation in the slab. Reference ACI 117 and ACI 302.1R. The general contractor should provide a certificate of compliance with the above recommendations.

H. Concrete subfloor must be clean and free of all foreign materials or objects including, but not limited to, curing compounds and sealers.

I. Fill cracks, grooves, voids, depressions, and other minor imperfections with Ardex (or equal) cement-based patching/leveling compounds. Follow the manufacturer's directions. Moveable joints must be treated utilizing specific transitioning joint devices depending upon the architect's recommendations.

Follow current ASTM F710 guidelines for the preparation of concrete slabs to receive resilient flooring.

J. Refer to ACI 302.2R "Guidelines for Concrete Slabs that Receive Moisture-Sensitive Flooring Materials" for concrete design and construction.

K. Concrete slab shall be fortified with continual steel reinforcement. Fiber reinforcement alone shall not be considered adequate fortification.

1.6 *WARRANTY*

A. Materials:
The indoor resilient athletic surfacing shall be covered by the manufacturer against product defects for 3 years.

B. Installation:
The installation of the indoor resilient multipurpose surfacing shall be covered against poor workmanship and faulty installation by a two (2) year written, limited warranty provided by the contractor performing/overseeing the installation.

1.7 *ADDITIONAL MATERIALS*

Furnish to the owner additional materials containing a total of at least 1% of each different color or design of the indoor resilient athletic surfacing used on the project.

1.8 *LEED™ CERTIFICATION*

The indoor resilient athletic surfacing should be able to help this facility to achieve points towards *LEED™ certification.*

LEED categories positively affected by the indoor resilient athletic surfacing:

Product Type			Rubber
Building Reuse Maintain Interior Nonstructural Elements	**MR 1.2**	Renovation	1
Construction Waste Management	**MR 2**	Renovation	2
Construction Waste Management Materials Reuse	**MR 3** **5 % - 1 point** **10% - 2 points**	Renovation	2
Recycled Content	**MR 4** **20% - 2 points**	New/Renovation	2
Regional Materials	**MR5**	New/Renovation	2
Indoor Environmental Air Quality Low VOC Adhesives/Sealants	**IEQ 4.1**	New/Renovation	1
Low-emitting Materials Paints and Coatings	**IEQ 4.2**	New/Renovation	1

PART 2 - PRODUCTS

2.1 *MANUFACTURERS*

The basis of the design for the indoor resilient multipurpose surfacing is Dropzone Elite 22.5mm as provided by Tarkett Sports. All other installation accessories and related components must be either made or approved by the indoor resilient athletic surfacing manufacturer. Other products may be approved as equal if deemed qualified and submitted in accordance with the General Conditions. Test reports confirming compliance from an Independent Sports Laboratory must be provided along with samples, technical data, installation, maintenance, and warranty prior to acceptance as an alternative product.

2.2 *MATERIALS.*

Dropzone Elite 22.5mm multi-layer flooring.

1. Physical properties of the indoor resilient athletic surfacing shall conform to the following minimums:

Property	Standard	Value
Elongation	ASTM D412	250%
Tensile Strength	ASTM D412	>200 PSI
Shore Hardness (Shore A)	ASTM D2240	70±5 (Wear Layer)
Flexibility	ASTM F137	Pass (1/4" mandrel)
Thermal Conductivity	ASTM C518	1.3 BTU/(hr - ft -°F)
Coefficient of Friction	ASTM D2047	0.8
Abrasion Resistance	(H-18 Wheels, 500g, 1000 cycles)ASTM D3389	< 1 G
Impact	EN 1517	0.00 mm
Indentation	EN 1516	0.1 mm
Rolling Load	EN 1569	Passed
VOC Compliance	ASTM 5116 (CA Section 1350)	Passed
Surface Texture	—	Slight
Total Thickness	—	22.5 mm (0.886˝)
Surface Thickness	—	10.5 mm
Base Layer Thickness	—	12 mm
Wear Surface Material	—	Rubber Blend
Base Layer Material	—	Blended Rubber
Roll Lengths	—	25-100 lin. ft.
Roll Width	—	4 ft.
Weight	—	4.2 lbs. per sq.ft.

1. Color: As available from the indoor resilient athletic surfacing manufacturer's standard range.
2. Adhesive: As approved by the indoor resilient athletic surfacing manufacturer.

PART 3 - EXECUTION

3.1 *EXAMINATION*

A. It is the responsibility of the general contractor/construction manager to ensure that project/site conditions are acceptable for the installation of the indoor resilient athletic flooring.
B. Verify that the area in which the indoor resilient athletic surfacing will be installed is dry and weather tight. Verify that permanent heat, light and ventilation is installed and operable.
C. Verify that all other work that could cause damage, dirt and dust or interrupt the normal pace of the indoor resilient athletic flooring installation is completed or suspended.
D. Verify that there is a stable room temperature of at least 65°F.
E. Verify that there are no foreign materials or objects on the subfloor and that the subfloor is clean and ready for installation.
F. *Direct Full Spread Adhering to Concrete Subfloor*: moisture content less than 98 % RH when tested per ASTM F2170. Use only manufacturer recommended Multi-Poxy adhesive.
G. If both tests are performed, use the highest value. Do not average the results of the tests. Report all field test results in writing to the General Contractor, Architect, and End User prior to installation.
H. Verify that the concrete subfloor surface pH level is within the 7 - 11 range.
I. Document the results indicating the slab is within manufacturer's tolerances for slab deviation.

3.2 *PREPARATION OF SURFACES*

A. Sand the entire surface of the concrete slab.
B. Sweep the concrete slab so as to remove all dirt and dust. If a sweeping compound is to be used it must be a sweeping compound that does not contain oil or other items that may inhibit the adhesive bond.
C. Slab must be dust free. In the event that dust impairs adhesive bond, priming the slab prior to application of adhesive may be necessary. Follow installation guidelines.

3.3 *OPTIONS FOR MOISTURE MITIGATION*

A. For projects with moisture conditions higher than the specified tolerances, **TARKOLAY** may be used for conditions that do not 100% per ASTM F2170. Use only approved adhesive as directed by the manufacturer. Tarkolay is available for roll goods only.

3.4 *INSTALLATION*

A. The installation area shall be closed to all traffic and activity for a period to be set by the indoor resilient athletic surfacing installer. The indoor resilient athletic surfacing installation shall not begin until the installer is familiar with the existing conditions.

B. All necessary precautions should be taken to minimize noise, smell, dust, the use of hazardous materials and any other items that may inconvenience others.
C. Install the indoor resilient athletic surfacing in strict accordance with the indoor resilient athletic surfacing manufacturer's written instructions.
D. Install the indoor resilient athletic surfacing minimizing cross seams. Provide a seam diagram during the submittal process for approval prior to installation.
E. Install appropriate threshold plates or transition strips where necessary.

3.5 *CLEANING*

A. Remove all unused materials, tools, and equipment and dispose of any debris properly. Clean the indoor resilient athletic surfacing in accordance with the manufacturer's instructions.

3.6 *PROTECTION*

If required, protect the indoor resilient athletic surfacing from damage using coverings approved by the manufacturer until acceptance of work by the customer or their authorized representative.

3.6 RELATED STANDARDS AND GUIDELINES

A. ASTM F2170 "Standard Test Method for Determining Relative Humidity In Concrete Floor Slabs Using In-Situ Probes"
B. ASTM F710 "Standard Practice for Preparing Concrete Floors to Receive Resilient Flooring"
C. ACI 302.2R-06 "Guideline for Concrete Slabs that Receive Moisture-Sensitive Flooring Materials"

END OF SECTION

SECTION 09 65 66
ARCHITECTURAL SPECIFICATIONS FOR INDOOR RESILIENT ATHLETIC SURFACING

PART 1 – GENERAL

1.1 *SECTION INCLUDES*

A. Supply and installation of the indoor resilient multipurpose surfacing
B. Application of the game lines
C. References for the correct construction and preparation of concrete slabs to receive resilient flooring.

1.2 *SUBMITTALS*

A. Product Data:

Manufacturer's promotional brochures, specifications and installation instructions

B. Samples:

1. Submit for selection and approval three (3) sets of the indoor resilient multipurpose surfacing, manufacturer's brochures, samples or sample boards of all of the available colors, textures and styles.
2. Submit color samples of all the available game line paint colors for selection and approval.

C. Closeout Submittals:

1. Submit three (3) copies of the indoor resilient multipurpose surfacing and manufacturer's maintenance instructions.
2. Submit three (3) copies of the material and installation warranties as specified.

1.3 *QUALITY ASSURANCE*

A. Qualifications:

1. The indoor resilient multipurpose surfacing shall have been actively marketed for a minimum of five (5) years.
2. The indoor resilient multipurpose surfacing shall be manufactured in an ISO 9001 certified plant.
3. The indoor resilient multipurpose surfacing supplier shall be an established firm experienced in the field and appointed as a distributor by the manufacturer of the indoor resilient multipurpose surfacing.
4. The installer of the indoor resilient multipurpose surfacing shall have a minimum of five (5) years experience in the field installing

indoor resilient multipurpose surfacing and have worked on at least five (5) projects of similar size, type and complexity.

B. Certifications:

Installer to submit the indoor resilient athletic surfacing manufacturer's or distributor's certification attesting that they are an approved installer of the indoor resilient multipurpose surfacing.

C. Testing:

Tests shall be relative for multi-purpose use with certificates from independent testing resources to be made available upon request. Test results shall be no more than 5 years old and performed according to ASTM and/or EN standard testing procedures.

1.4 *DELIVERY, STORAGE AND HANDLING*

A. Delivery:

Material shall not be delivered until all related work is in place and finished and/or proper storage facilities and conditions can be provided and guaranteed stable according to Tarkett Sports' recommendations.

B. Storage:

Store the material in a secure, clean and dry location. Maintain temperature between 65° and 85° Fahrenheit. Store the indoor resilient athletic surfacing on a clean flat surface.

1.5 *PROJECT/SITE CONDITIONS*

A. It is the responsibility of the general contractor/construction manager to maintain project/site conditions acceptable for the installation of the indoor resilient multipurpose flooring.
B. The area in which the indoor resilient multipurpose surfacing will be installed shall be dry and weather tight. Permanent heat, light and ventilation shall be installed and operable.
C. All other trades shall have completed their work prior to the installation of the resilient athletic flooring. The general contractor or Construction Manager shall maintain a secure and clean working environment before, during and after the installation. Suspension of other trades' work may be authorized providing their work will not damage the new flooring.

D. Maintain a stable room temperature of at least 65°F for a minimum of one (1) week prior to, during and thereafter installation.
E. An effective low-permeance vapor barrier is placed directly beneath the concrete subfloor. For "on" or "below grade" installations, it is recommended to provide a permanent vapor barrier resistant to long term hydrostatic pressure/moisture exposure. Protrusions should be sealed to prevent moisture migration into the slab. Moisture should not be allowed to enter the slab after the completed construction.
F. Concrete subfloor surface pH level within the 7 to 9 range dependent upon installation type.
G. Concrete subfloor should be no greater than 1/8" within a 10 ft diameter. This tolerance can be measured in accordance with ASTM E1155.
   A specified (F_F) of 50 and an (F_L) of 30 should reach this degree of floor flatness and floor level. There is no numerical correlation between F numbers and the deviation from the straight edge, however the above specified numbers should achieve a flat floor with minimal deviation in the slab. Reference ACI 117 and ACI 302.1R. The general contractor should provide a certificate of compliance with the above recommendations.
H. Concrete subfloor must be clean and free of all foreign materials or objects including, but not limited to, curing compounds and sealers.
I. Fill cracks, grooves, voids, depressions, and other minor imperfections with Ardex (or equal) cement-based patching/leveling compounds. Follow the manufacturer's directions. Moveable joints must be treated utilizing specific transitioning joint devices depending upon the architect's recommendations. Follow current ASTM F710 guidelines for the preparation of concrete slabs to receive resilient flooring.
J. Refer to ACI 302.2R "Guidelines for Concrete Slabs that Receive Moisture-Sensitive Flooring Materials" for concrete design and construction.
K. Concrete slab shall be fortified with continual steel reinforcement. Fiber reinforcement alone shall not be considered adequate fortification.

1.6 *WARRANTY*

A. Materials:

   The indoor resilient athletic surfacing shall be covered by the manufacturer against product defects for 3 years.

B. Installation:

   The installation of the indoor resilient multipurpose surfacing shall be covered against poor workmanship and faulty installation by a two (2)

year written, limited warranty provided by the contractor performing/overseeing the installation.

1.7 *ADDITIONAL MATERIALS*

Furnish to the owner additional materials containing a total of at least 1% of each different color or design of the indoor resilient athletic surfacing used on the project.

1.8 *LEED™ CERTIFICATION*

The indoor resilient athletic surface contributes to achieve points towards *LEED™ certification.*

PART 2 - PRODUCTS

2.1 *MANUFACTURERS*

The basis of the design for the indoor resilient multipurpose surfacing is Dropzone Impact as provided by Tarkett Sports. All other installation accessories and related components must be either made or approved by the indoor resilient athletic surfacing manufacturer. Other products may be approved as equal if deemed qualified and submitted in accordance with the General Conditions.

2.2 *MATERIALS*

Dropzone Impact

1. Physical properties of the indoor resilient athletic surfacing shall conform to the following minimums.
2. Color: Standard colors from the manufacturer's range.
3. Adhesive: As approved by the manufacturer.

Property	Standard	Value
Elongation	ASTM D412	250%
Tensile Strength	ASTM D412	493 psi
Shore Hardness (Shore A)	ASTM D2240	70±5 (Wear Layer)
Reaction to Fire	ASTM E648	Class 1
Smoke Density (Non-Flaming)	ASTM E662	Passed
Coefficient of Friction	ASTM D1894	0.99
Abrasion Resistance	(H-18 Wheels, 500g, 1000 cycles)ASTM D3389	0.37g
Chemical Resistance	ASTM F925	Compliant
Static Load Limit	ASTM F970	≤0.003 (250 psi/ 24 hours)
Tear Resistance	ASTM D624	Passed
Tear Abrasion	ASTM D501	Passed
Resistance to Heat	ASTM F1514	Compliant
Thickness	ASTM F386	9.5 mm (0.374”)
Thickness of Wear Layer	ASTM F410	2.3mm
Weight	—	12.6 lbs per tile
Wear Surface Material	—	Virgin Rubber
Base Layer Material	—	Blended Rubber
Tile Formats Options	—	Square-Edge, Interlocking
Tile Dimensions	—	1 m x 1 m (3.28’ x 3.28’)

PART 3 - EXECUTION

3.1 *EXAMINATION*

A. It is the responsibility of the general contractor/construction manager to ensure that project/site conditions are acceptable for the installation of the indoor resilient athletic flooring.

B. Verify that the area in which the indoor resilient athletic surfacing will be installed is dry and weather tight. Verify that permanent heat, light and ventilation is installed and operable.
C. Verify that all other work that could cause damage, dirt and dust or interrupt the normal pace of the indoor resilient athletic flooring installation is completed or suspended.
D. Verify that there is a stable room temperature of at least 65°F.
E. Verify that there are no foreign materials or objects on the subfloor and that the subfloor is clean and ready for installation.
F. *Direct Full Spread Adhering to Concrete Subfloor* with TNA 965 Acrylic Adhesive: No higher than 85 % RH when tested per ASTM F2170. *Direct Full Spread Adhering to Concrete Subfloor* with TNA 975 Two Part Urethane Adhesive: No higher than 90 % RH when tested per ASTM F2170.
G. Do not average the results of the tests. Report all field test results in writing to the General Contractor, Architect, and End User prior to installation.
H. Verify that the concrete subfloor surface pH level is within the 7 - 10 range.
I. Document the results indicating the slab is within manufacturer's tolerances for slab deviation.

3.2 *PREPARATION OF SURFACES*

A. Sand the entire surface of the concrete slab.
B. Sweep the concrete slab so as to remove all dirt and dust. If a sweeping compound is to be used it must be a sweeping compound that does not contain oils or other items that may inhibit the adhesive bond. (See ASTM F710).
C. Slab must be dust free. In the event that dust impairs adhesive bond, priming the slab prior to application of adhesive may be necessary. Follow installation guidelines.

3.3 *INSTALLATION*

A. The installation area shall be closed to all traffic and activity for a period to be set by the indoor resilient athletic surfacing installer. The indoor resilient athletic surfacing installation shall not begin until the installer is familiar with the existing conditions.
B. All necessary precautions should be taken to minimize noise, smell, dust, the use of hazardous materials and any other items that may inconvenience others.
C. Install the indoor resilient athletic surfacing in strict accordance with the indoor resilient athletic surfacing manufacturer's written instructions.

D. Install the indoor resilient athletic surfacing minimizing cross seams. Provide a seam diagram during the submittal process for approval prior to installation.
E. Install appropriate threshold plates or transition strips where necessary.

3.4 *CLEANING*

A. Remove all unused materials, tools, and equipment and dispose of any debris properly. Clean the indoor resilient athletic surfacing in accordance with the manufacturer's instructions.

3.5 *PROTECTION*

If required, protect the indoor resilient athletic surfacing from damage using coverings approved by the manufacturer until acceptance of work by the customer or their authorized representative.

3.6 *RELATED STANDARDS AND GUIDELINES*

A. ASTM F2170 "Standard Test Method for Determining Relative Humidity In Concrete Floor Slabs Using In-Situ Probes"
B. ASTM F710 "Standard Practice for Preparing Concrete Floors to Receive Resilient Flooring"
C. ACI 302.2R-06 "Guideline for Concrete Slabs that Receive Moisture Sensitive Flooring Materials"

END OF SECTION

SECTION 09 65 66
ARCHITECTURAL SPECIFICATIONS FOR INDOOR RESILIENT ATHLETIC SURFACING

PART 1 – GENERAL

1.1 *SECTION INCLUDES*

A. Supply and installation of the indoor resilient multipurpose surfacing
B. Application of the game lines
C. References for the correct construction and preparation of concrete slabs to receive resilient flooring.

1.2 *SUBMITTALS*

A. Product Data:

Manufacturer's promotional brochures, specifications and installation instructions

B. Samples:

1. Submit for selection and approval three (3) sets of the indoor resilient multipurpose surfacing, manufacturer's brochures, samples or sample boards of all of the available colors, textures and styles.
2. Submit color samples of all the available game line paint colors for selection and approval.

C. Closeout Submittals:

1. Submit three (3) copies of the indoor resilient multipurpose surfacing and manufacturer's maintenance instructions.
2. Submit three (3) copies of the material and installation warranties as specified.

1.3 *QUALITY ASSURANCE*

A. Qualifications:

1. The indoor resilient multipurpose surfacing shall have been actively marketed for a minimum of five (5) years.
2. The indoor resilient multipurpose surfacing shall be manufactured in an ISO 9001 certified plant.
3. The indoor resilient multipurpose surfacing supplier shall be an established firm experienced in the field and appointed as a distributor by the manufacturer of the indoor resilient multipurpose surfacing.
4. The installer of the indoor resilient multipurpose surfacing shall have a minimum of five (5) years experience in the field installing

indoor resilient multipurpose surfacing and have worked on at least five (5) projects of similar size, type and complexity.

B. Certifications:

Installer to submit the indoor resilient athletic surfacing manufacturer's or distributor's certification attesting that they are an approved installer of the indoor resilient multipurpose surfacing.

C. Testing:

Tests shall be relative for multi-purpose use with certificates from independent testing resources to be made available upon request. Test results shall be no more than 5 years old and performed according to ASTM and/or EN standard testing procedures.

1.4 *DELIVERY, STORAGE AND HANDLING*

A. Delivery:

Material shall not be delivered until all related work is in place and finished and/or proper storage facilities and conditions can be provided and guaranteed stable according to Tarkett Sports' recommendations.

B. Storage:

Store the material in a secure, clean and dry location. Maintain temperature between 65° and 85° Fahrenheit. Store the indoor resilient athletic surfacing on a clean flat surface.

1.5 *PROJECT/SITE CONDITIONS*

A. It is the responsibility of the general contractor/construction manager to maintain project/site conditions acceptable for the installation of the indoor resilient multipurpose flooring.
B. The area in which the indoor resilient multipurpose surfacing will be installed shall be dry and weather tight. Permanent heat, light and ventilation shall be installed and operable.
C. All other trades shall have completed their work prior to the installation of the resilient athletic flooring. The general contractor or Construction Manager shall maintain a secure and clean working environment before, during and after the installation. Suspension of other trades' work may be authorized providing their work will not damage the new flooring.

D. Maintain a stable room temperature of at least 65°F for a minimum of one (1) week prior to, during and thereafter installation.
E. An effective low-permeance vapor barrier is placed directly beneath the concrete subfloor. For "on" or "below grade" installations, it is recommended to provide a permanent vapor barrier resistant to long term hydrostatic pressure/moisture exposure. Protrusions should be sealed to prevent moisture migration into the slab. Moisture should not be allowed to enter the slab after the completed construction.
F. Concrete subfloor surface pH level within the 7 to 9 range dependent upon installation type.
G. Concrete subfloor should be no greater than 1/8" within a 10 ft diameter. This tolerance can be measured in accordance with ASTM E1155.
   A specified (F_F) of 50 and an (F_L) of 30 should reach this degree of floor flatness and floor level. There is no numerical correlation between F numbers and the deviation from the straight edge, however the above specified numbers should achieve a flat floor with minimal deviation in the slab. Reference ACI 117 and ACI 302.1R. The general contractor should provide a certificate of compliance with the above recommendations.
H. Concrete subfloor must be clean and free of all foreign materials or objects including, but not limited to, curing compounds and sealers.
I. Fill cracks, grooves, voids, depressions, and other minor imperfections with Ardex (or equal) cement-based patching/leveling compounds. Follow the manufacturer's directions. Moveable joints must be treated utilizing specific transitioning joint devices depending upon the architect's recommendations. Follow current ASTM F710 guidelines for the preparation of concrete slabs to receive resilient flooring.
J. Refer to ACI 302.2R "Guidelines for Concrete Slabs that Receive Moisture-Sensitive Flooring Materials" for concrete design and construction.
K. Concrete slab shall be fortified with continual steel reinforcement. Fiber reinforcement alone shall not be considered adequate fortification.

1.6 *WARRANTY*

A. Materials:

   The indoor resilient athletic surfacing shall be covered by the manufacturer against product defects for 3 years.

B. Installation:

   The installation of the indoor resilient multipurpose surfacing shall be covered against poor workmanship and faulty installation by a two (2)

year written, limited warranty provided by the contractor performing/overseeing the installation.

1.7 *ADDITIONAL MATERIALS*

Furnish to the owner additional materials containing a total of at least 1% of each different color or design of the indoor resilient athletic surfacing used on the project.

1.8 *LEED™ CERTIFICATION*

The indoor resilient athletic surface contributes to achieve points towards *LEED™ certification.*

PART 2 - PRODUCTS

2.1 *MANUFACTURERS*

The basis of the design for the indoor resilient multipurpose surfacing is Dropzone Impact as provided by Tarkett Sports. All other installation accessories and related components must be either made or approved by the indoor resilient athletic surfacing manufacturer. Other products may be approved as equal if deemed qualified and submitted in accordance with the General Conditions.

2.2 *MATERIALS*

Dropzone Impact

1. Physical properties of the indoor resilient athletic surfacing shall conform to the following minimums.
2. Color: Standard colors from the manufacturer's range.
3. Adhesive: As approved by the manufacturer.

Property	Standard	Value
Elongation	ASTM D412	250%
Tensile Strength	ASTM D412	493 psi
Shore Hardness (Shore A)	ASTM D2240	70±5 (Wear Layer)
Reaction to Fire	ASTM E648	Class 1
Smoke Density (Non-Flaming)	ASTM E662	Passed
Coefficient of Friction	ASTM D1894	0.99
Abrasion Resistance	(H-18 Wheels, 500g, 1000 cycles)ASTM D3389	0.37g
Chemical Resistance	ASTM F925	Compliant
Static Load Limit	ASTM F970	≤0.003 (250 psi/ 24 hours)
Tear Resistance	ASTM D624	Passed
Tear Abrasion	ASTM D501	Passed
Resistance to Heat	ASTM F1514	Compliant
Thickness	ASTM F386	9.5 mm (0.374”)
Thickness of Wear Layer	ASTM F410	2.3mm
Weight	—	12.6 lbs per tile
Wear Surface Material	—	Virgin Rubber
Base Layer Material	—	Blended Rubber
Tile Formats Options	—	Square-Edge, Interlocking
Tile Dimensions	—	1 m x 1 m (3.28’ x 3.28’)

PART 3 - EXECUTION

3.1 *EXAMINATION*

A. It is the responsibility of the general contractor/construction manager to ensure that project/site conditions are acceptable for the installation of the indoor resilient athletic flooring.

B. Verify that the area in which the indoor resilient athletic surfacing will be installed is dry and weather tight. Verify that permanent heat, light and ventilation is installed and operable.
C. Verify that all other work that could cause damage, dirt and dust or interrupt the normal pace of the indoor resilient athletic flooring installation is completed or suspended.
D. Verify that there is a stable room temperature of at least 65°F.
E. Verify that there are no foreign materials or objects on the subfloor and that the subfloor is clean and ready for installation.
F. Direct Full Spread Adhering to Concrete Subfloor with TNA 965 Acrylic Adhesive: No higher than 85 % RH when tested per ASTM F2170. Direct Full Spread Adhering to Concrete Subfloor with TNA 975 Two Part Urethane Adhesive: No higher than 90 % RH when tested per ASTM F2170.
G. Do not average the results of the tests. Report all field test results in writing to the General Contractor, Architect, and End User prior to installation.
H. Verify that the concrete subfloor surface pH level is within the 7 - 10 range.
I. Document the results indicating the slab is within manufacturer's tolerances for slab deviation.

3.2 *PREPARATION OF SURFACES*

A. Sand the entire surface of the concrete slab.
B. Sweep the concrete slab so as to remove all dirt and dust. If a sweeping compound is to be used it must be a sweeping compound that does not contain oils or other items that may inhibit the adhesive bond. (See ASTM F710).
C. Slab must be dust free. In the event that dust impairs adhesive bond, priming the slab prior to application of adhesive may be necessary. Follow installation guidelines.

3.3 *INSTALLATION*

A. The installation area shall be closed to all traffic and activity for a period to be set by the indoor resilient athletic surfacing installer. The indoor resilient athletic surfacing installation shall not begin until the installer is familiar with the existing conditions.
B. All necessary precautions should be taken to minimize noise, smell, dust, the use of hazardous materials and any other items that may inconvenience others.
C. Install the indoor resilient athletic surfacing in strict accordance with the indoor resilient athletic surfacing manufacturer's written instructions.

D. Install the indoor resilient athletic surfacing minimizing cross seams. Provide a seam diagram during the submittal process for approval prior to installation.
E. Install appropriate threshold plates or transition strips where necessary.

3.4 *CLEANING*

A. Remove all unused materials, tools, and equipment and dispose of any debris properly. Clean the indoor resilient athletic surfacing in accordance with the manufacturer's instructions.

3.5 *PROTECTION*

If required, protect the indoor resilient athletic surfacing from damage using coverings approved by the manufacturer until acceptance of work by the customer or their authorized representative.

3.6 *RELATED STANDARDS AND GUIDELINES*

A. ASTM F2170 "Standard Test Method for Determining Relative Humidity In Concrete Floor Slabs Using In-Situ Probes"
B. ASTM F710 "Standard Practice for Preparing Concrete Floors to Receive Resilient Flooring"
C. ACI 302.2R-06 "Guideline for Concrete Slabs that Receive Moisture Sensitive Flooring Materials"

END OF SECTION

SECTION 09645
ARCHITECTURAL SPECIFICATIONS FOR INDOOR RESILIENT ATHLETIC SURFACING

PART 1 – GENERAL

1.1 *SECTION INCLUDES*

A. Supply and installation of the indoor resilient multipurpose surfacing
B. Application of the game lines
C. References for the correct construction and preparation of concrete slabs to receive resilient flooring.

1.2 *SUBMITTALS*

A. Product Data:
Manufacturer's promotional brochures, specifications and installation instructions
B. Samples:
1. Submit for selection and approval three (3) sets of the indoor resilient multipurpose surfacing, manufacturer's brochures, samples or sample boards of all of the available colors, textures and styles.
2. Submit color samples of all the available game line paint colors for selection and approval.
C. Closeout Submittals:
1. Submit three (3) copies of the indoor resilient multipurpose surfacing and manufacturer's maintenance instructions.
2. Submit three (3) copies of the material and installation warranties as specified.

1.3 *QUALITY ASSURANCE*

A. Qualifications:
1. The indoor resilient multipurpose surfacing shall have been actively marketed for a minimum of five (5) years.
3. The indoor resilient multipurpose surfacing supplier shall be an established firm experienced in the field and appointed as a distributor by the manufacturer of the indoor resilient multipurpose surfacing.
4. The installer of the indoor resilient multipurpose surfacing shall have a minimum of five (5) years experience in the field installing indoor resilient multipurpose surfacing and have worked on at least five (5) projects of similar size, type and complexity.
B. Certifications:
1. Installer to submit the indoor resilient athletic surfacing manufacturer's or distributor's certification attesting that they are an approved installer of the indoor resilient multipurpose surfacing.
C. Testing:
Tests shall be relative for multi-purpose use with certificates from independent testing resources to be made available upon request. Test results shall be no more than 5 years old and performed according to ASTM and/or EN standard testing procedures.

1.4 *DELIVERY, STORAGE AND HANDLING*

A. Delivery:
Material shall not be delivered until all related work is in place and finished and/or proper storage facilities and conditions can be provided and guaranteed stable according to FieldTurf USA, Inc. recommendations.

B. Storage:
Store the material in a secure, clean and dry location. Maintain temperature between 55° and 85° Fahrenheit. Store the indoor resilient athletic surfacing on a clean flat surface. Do not stack rolls.

1.5 *PROJECT/SITE CONDITIONS*

A. It is the responsibility of the general contractor/construction manager to maintain project/site conditions acceptable for the installation of the indoor resilient multipurpose flooring.

B. The area in which the indoor resilient multipurpose surfacing will be installed shall be dry and weather tight. Permanent heat, light and ventilation shall be installed and operable.

C. All other trades shall have completed their work prior to the installation of the resilient athletic flooring. The general contractor or Construction Manager shall maintain a secure and clean working environment before, during and after the installation. Suspension of other trades' work may be authorized providing their work will not damage the new flooring.

D. Maintain a stable room temperature of at least 65°F for a minimum of one (1) week prior to, during and thereafter installation.

E. An effective low-permeance vapor barrier is placed directly beneath the concrete subfloor. For "on" or "below grade" installations, it is recommended to provide a permanent vapor barrier resistant to long term hydrostatic pressure/moisture exposure. Protrusions should be sealed to prevent moisture migration into the slab. Moisture should not be allowed to enter the slab after the completed construction.

F. Concrete subfloor surface pH level within the 7 to 9 range dependent upon installation type.

G. Concrete subfloor should be no greater than 1/8" within a 10 ft diameter. This tolerance can be measured in accordance with ASTM E1155.
A specified (F_F) of 50 and an (F_L) of 30 should reach this degree of floor flatness and floor level. There is no numerical correlation between F numbers and the deviation from the straight edge, however the above specified numbers should achieve a flat floor with minimal deviation in the slab. Reference ACI 117 and ACI 302.1R. The general contractor should provide a certificate of compliance with the above recommendations.

H. Concrete subfloor must be clean and free of all foreign materials or objects including, but not limited to, curing compounds and sealers.

I. Fill cracks, grooves, voids, depressions, and other minor imperfections with Ardex (or equal) cement-based patching/leveling compounds. Follow the manufacturer's directions. Moveable joints must be treated utilizing specific transitioning joint devices depending upon the architect's recommendations. Follow current ASTM F710 guidelines for the preparation of concrete slabs to receive resilient flooring.

J. Refer to ACI 302.2R "Guidelines for Concrete Slabs that Receive Moisture-Sensitive Flooring Materials" for concrete design and construction.
K. Concrete slab shall be fortified with continual steel reinforcement. Fiber reinforcement alone shall not be considered adequate fortification.

1.6 *WARRANTY*

A. Materials:
The indoor resilient athletic surfacing shall be covered by the manufacturer against product defects for 25 years.
B. Installation:
The installation of the indoor resilient multipurpose surfacing shall be covered against poor workmanship and faulty installation by a two (2) year written, limited warranty provided by the contractor performing/overseeing the installation.

1.7 *ADDITIONAL MATERIALS*

Furnish to the owner additional materials containing a total of at least 1% of each different color or design of the indoor resilient athletic surfacing used on the project.

1.8 *LEED™ CERTIFICATION*

The indoor resilient athletic surfacing should be able to help this facility to achieve points towards *LEED™ certification.*

LEED categories positively affected by the indoor resilient athletic surfacing:

Product Type			Rubber
Building Reuse Maintain Interior Nonstructural Elements	MR 1.2	Renovation	1
Construction Waste Management	MR 2	Renovation	2
Construction Waste Management Materials Reuse	MR 3 5 % - 1 point 10 % - 2 points	Renovation	2
Recycled Content	MR 4 20 % - 2 points	New/Renovation	2
Regional Materials	MR5	New/Renovation	2
Indoor Environmental Air Quality Low VOC Adhesives/Sealants	IEQ 4.1	New/Renovation	1
Low-emitting Materials Paints and Coatings	IEQ 4.2	New/Renovation	1

PART 2 - PRODUCTS

2.1 *MANUFACTURERS*

The basis of the design for the indoor resilient multipurpose surfacing is Dropzone Power as provided by Tarkett Sports. All other installation accessories and related components must be either made or approved by the indoor resilient athletic surfacing manufacturer. Other products may be approved as equal if deemed qualified and submitted in accordance with the General Conditions. Test reports confirming compliance from an Independent Sports Laboratory must be

provided along with samples, technical data, installation, maintenance, and warranty prior to acceptance as an alternative product.

2.2 *MATERIALS.*
Dropzone Power is a single layer flooring system.

1. Physical properties of the indoor resilient athletic surfacing shall conform to the following minimums:

Property	Standard	Value
Slip Resistance	ASTM D2047	>0.8
Tensile Strength	ASTM D412	>265 PSI
Abrasion Resistance	ASTM D3389 / EN 649	< 35 g (2,000 cycles)
Density	ASTM D3676	68.3 lbs./cubic foot
Flammability	-	Pass
Tear Resistance	-	Elongation at break 1.52
VOC Compliance	ASTM D5116	Passed (CA Section 1350)
Surface Texture	—	Slight
Total Thickness	—	18 mm (0.709”)
Roll Length	—	15 ft.
Roll Width	—	4 ft. (± 0.75”)
Weight	—	3.75 lbs. per sq.ft.

1. Color: EPDM chips found throughout the material. Colors are as available from the indoor resilient athletic surfacing manufacturer’s standard range. Custom 85% colors are available upon request.
2. Adhesive: As approved by the indoor resilient athletic surfacing manufacturer.

PART 3 - EXECUTION

3.1 *EXAMINATION*

A. It is the responsibility of the general contractor/construction manager to ensure that project/site conditions are acceptable for the installation of the indoor resilient athletic flooring.
B. Verify that the area in which the indoor resilient athletic surfacing will be installed is dry and weather tight. Verify that permanent heat, light and ventilation is installed and operable.
C. Verify that all other work that could cause damage, dirt and dust or interrupt the normal pace of the indoor resilient athletic flooring installation is completed or suspended.
D. Verify that there is a stable room temperature of at least 65°F.
E. Verify that there are no foreign materials or objects on the subfloor and that the subfloor is clean and ready for installation.
F. *Direct Full Spread Adhering to Concrete Subfloor*: moisture content less than 98 % RH when tested per ASTM F2170. Use only manufacturer recommended Multi-Poxy adhesive.

G. If both tests are performed, use the highest value. Do not average the results of the tests. Report all field test results in writing to the General Contractor, Architect, and End User prior to installation.
H. Verify that the concrete subfloor surface pH level is within the 7 - 11 range.
I. Document the results indicating the slab is within manufacturer's tolerances for slab deviation.

3.2 *PREPARATION OF SURFACES*

A. Sand the entire surface of the concrete slab.
B. Sweep the concrete slab so as to remove all dirt and dust. If a sweeping compound is to be used it must be a sweeping compound that does not contain oil or other items that may inhibit the adhesive bond.
C. Slab must be dust free. In the event that dust impairs adhesive bond, priming the slab prior to application of adhesive may be necessary. Follow installation guidelines.

3.3 *OPTIONS FOR MOISTURE MITIGATION*

For projects with moisture conditions higher than the specified tolerances, TARKOLAY may be used for conditions that do not 100% per ASTM F2170. Use only approved adhesive as directed by the manufacturer. Tarkolay is available for roll goods only.

3.4 *INSTALLATION*

A. The installation area shall be closed to all traffic and activity for a period to be set by the indoor resilient athletic surfacing installer. The indoor resilient athletic surfacing installation shall not begin until the installer is familiar with the existing conditions.
B. All necessary precautions should be taken to minimize noise, smell, dust, the use of hazardous materials and any other items that may inconvenience others.
C. Install the indoor resilient athletic surfacing in strict accordance with the indoor resilient athletic surfacing manufacturer's written instructions.
D. Install the indoor resilient athletic surfacing minimizing cross seams. Provide a seam diagram during the submittal process for approval prior to installation.
E. Install appropriate threshold plates or transition strips where necessary.

3.5 *CLEANING*

Remove all unused materials, tools, and equipment and dispose of any debris properly. Clean the indoor resilient athletic surfacing in accordance with the manufacturer's instructions.

3.6 *PROTECTION*

If required, protect the indoor resilient athletic surfacing from damage using coverings approved by the manufacturer until acceptance of work by the customer or their authorized representative.

3.7 RELATED STANDARDS AND GUIDELINES

A. ASTM F2170 "Standard Test Method for Determining Relative Humidity In Concrete Floor Slabs Using In-Situ Probes"
B. ASTM F710 "Standard Practice for Preparing Concrete Floors to Receive Resilient Flooring"
C. ACI 302.2R-06 "Guideline for Concrete Slabs that Receive Moisture-Sensitive Flooring Materials"

END OF SECTION

SECTION 09645
ARCHITECTURAL SPECIFICATIONS FOR INDOOR RESILIENT ATHLETIC SURFACING

PART 1 – GENERAL

1.1 *SECTION INCLUDES*

A. Supply and installation of the indoor resilient multipurpose surfacing
B. Application of the game lines
C. References for the correct construction and preparation of concrete slabs to receive resilient flooring.

1.2 *SUBMITTALS*

A. Product Data:
Manufacturer's promotional brochures, specifications and installation instructions
B. Samples:
1. Submit for selection and approval three (3) sets of the indoor resilient multipurpose surfacing, manufacturer's brochures, samples or sample boards of all of the available colors, textures and styles.
2. Submit color samples of all the available game line paint colors for selection and approval.
C. Closeout Submittals:
1. Submit three (3) copies of the indoor resilient multipurpose surfacing and manufacturer's maintenance instructions.
2. Submit three (3) copies of the material and installation warranties as specified.

1.3 *QUALITY ASSURANCE*

A. Qualifications:
1. The indoor resilient multipurpose surfacing shall have been actively marketed for a minimum of five (5) years.
2. The indoor resilient multipurpose surfacing shall be manufactured in an ISO 9001 certified plant.
3. The indoor resilient multipurpose surfacing supplier shall be an established firm experienced in the field and appointed as a distributor by the manufacturer of the indoor resilient multipurpose surfacing.
4. The installer of the indoor resilient multipurpose surfacing shall have a minimum of five (5) years experience in the field installing indoor resilient multipurpose surfacing and have worked on at least five (5) projects of similar size, type and complexity.
B. Certifications:
1. Installer to submit the indoor resilient athletic surfacing manufacturer's or distributor's certification attesting that they are an approved installer of the indoor resilient multipurpose surfacing.
C. Testing:
Tests shall be relative for multi-purpose use with certificates from independent testing resources to be made available upon request. Test results shall be no more than 5 years old and performed according to ASTM and/or EN standard testing procedures.

1.4 *DELIVERY, STORAGE AND HANDLING*

A. Delivery:
Material shall not be delivered until all related work is in place and finished and/or proper storage facilities and conditions can be provided and guaranteed stable according to FieldTurf USA, Inc. recommendations.

B. Storage:
Store the material in a secure, clean and dry location. Maintain temperature between 55° and 85° Fahrenheit. Store the indoor resilient athletic surfacing on a clean flat surface. Do not stack rolls.

1.5 *PROJECT/SITE CONDITIONS*

A. It is the responsibility of the general contractor/construction manager to maintain project/site conditions acceptable for the installation of the indoor resilient multipurpose flooring.

B. The area in which the indoor resilient multipurpose surfacing will be installed shall be dry and weather tight. Permanent heat, light and ventilation shall be installed and operable.

C. All other trades shall have completed their work prior to the installation of the resilient athletic flooring. The general contractor or Construction Manager shall maintain a secure and clean working environment before, during and after the installation. Suspension of other trades' work may be authorized providing their work will not damage the new flooring.

D. Maintain a stable room temperature of at least 65°F for a minimum of one (1) week prior to, during and thereafter installation.

E. An effective low-permeance vapor barrier is placed directly beneath the concrete subfloor. For "on" or "below grade" installations, it is recommended to provide a permanent vapor barrier resistant to long term hydrostatic pressure/moisture exposure. Protrusions should be sealed to prevent moisture migration into the slab. Moisture should not be allowed to enter the slab after the completed construction.

F. Concrete subfloor surface pH level within the 7 to 9 range dependent upon installation type.

G. Concrete subfloor should be no greater than 1/8" within a 10 ft diameter. This tolerance can be measured in accordance with ASTM E1155.
A specified (F_F) of 50 and an (F_L) of 30 should reach this degree of floor flatness and floor level. There is no numerical correlation between F numbers and the deviation from the straight edge, however the above specified numbers should achieve a flat floor with minimal deviation in the slab. Reference ACI 117 and ACI 302.1R. The general contractor should provide a certificate of compliance with the above recommendations.

H. Concrete subfloor must be clean and free of all foreign materials or objects including, but not limited to, curing compounds and sealers.

I. Fill cracks, grooves, voids, depressions, and other minor imperfections with Ardex (or equal) cement-based patching/leveling compounds. Follow the manufacturer's directions. Moveable joints must be treated utilizing specific transitioning joint devices depending upon the architect's recommendations.

Follow current ASTM F710 guidelines for the preparation of concrete slabs to receive resilient flooring.

J. Refer to ACI 302.2R "Guidelines for Concrete Slabs that Receive Moisture-Sensitive Flooring Materials" for concrete design and construction.

K. Concrete slab shall be fortified with continual steel reinforcement. Fiber reinforcement alone shall not be considered adequate fortification.

1.6 *WARRANTY*

A. Materials:
The indoor resilient athletic surfacing shall be covered by the manufacturer against product defects for 3 years.

B. Installation:
The installation of the indoor resilient multipurpose surfacing shall be covered against poor workmanship and faulty installation by a two (2) year written, limited warranty provided by the contractor performing/overseeing the installation.

1.7 *ADDITIONAL MATERIALS*

Furnish to the owner additional materials containing a total of at least 1% of each different color or design of the indoor resilient athletic surfacing used on the project.

1.8 *LEED™ CERTIFICATION*

The indoor resilient athletic surfacing should be able to help this facility to achieve points towards *LEED™ certification.*

LEED categories positively affected by the indoor resilient athletic surfacing:

Product Type			Rubber
Building Reuse Maintain Interior Nonstructural Elements	**MR 1.2**	Renovation	1
Construction Waste Management	**MR 2**	Renovation	2
Construction Waste Management Materials Reuse	**MR 3** **5 % - 1 point** **10% - 2 points**	Renovation	2
Recycled Content	**MR 4** **20% - 2 points**	New/Renovation	2
Regional Materials	**MR5**	New/Renovation	2
Indoor Environmental Air Quality Low VOC Adhesives/Sealants	**IEQ 4.1**	New/Renovation	1
Low-emitting Materials Paints and Coatings	**IEQ 4.2**	New/Renovation	1

PART 2 - PRODUCTS

2.1 *MANUFACTURERS*

The basis of the design for the indoor resilient multipurpose surfacing is **Dropzone, Dropzone Speckle, and/or Dropzone Interlocking** as provided by FieldTurf USA, Inc. All other installation accessories and related components must be either made or approved by the indoor resilient athletic surfacing manufacturer. Other products may be approved as equal if deemed qualified and submitted in accordance with the General Conditions. Test reports confirming compliance from an Independent Sports Laboratory must be provided along with samples, technical data, installation, maintenance, and warranty prior to acceptance as an alternative product.

2.2 *MATERIALS.*

Dropzone, Dropzone Speckle, and/or Dropzone Interlocking 8mm recycled non-laminated rubber flooring.

1. Physical properties of the indoor resilient athletic surfacing shall conform to the following minimums:

Width	…….	Roll Width 4ft – Tile 2ft x 2ft
Length	…….	Specify length (min. 15 ft)
Total Thickness	…….	8 mm
Weight	…….	1.92 lbs/sq.ft.
Tensile Strength	ASTM D412	200 minimum
Static Load	ASTM F970	1000 p.s.i (modified test)
Coefficient of Friction	ASTM 2047	>.9
Chemical Resistance	ASTM F925	Excellent
Ambient Noise Reduction	ASTM C423	.10
Impact Sound Insulation	ASTM E492	.45 minimum
Thermal Conductivity	ASTM C518	Approximate .406
Sound Transmission	ASTM 413	.45 minimum

1. Color: As available from the indoor resilient athletic surfacing manufacturer's standard range.
2. Adhesive: As approved by the indoor resilient athletic surfacing manufacturer.

PART 3 - EXECUTION

3.1 *EXAMINATION*

A. It is the responsibility of the general contractor/construction manager to ensure that project/site conditions are acceptable for the installation of the indoor resilient athletic flooring.
B. Verify that the area in which the indoor resilient athletic surfacing will be installed is dry and weather tight. Verify that permanent heat, light and ventilation is installed and operable.

C. Verify that all other work that could cause damage, dirt and dust or interrupt the normal pace of the indoor resilient athletic flooring installation is completed or suspended.
D. Verify that there is a stable room temperature of at least 65°F.
E. Verify that there are no foreign materials or objects on the subfloor and that the subfloor is clean and ready for installation.
F. *Direct Full Spread Adhering to Concrete Subfloor* : moisture content less than 98 % RH when tested per ASTM F2170. Use only manufacturer recommended Multi-Poxy adhesive.
G. If both tests are performed, use the highest value. Do not average the results of the tests. Report all field test results in writing to the General Contractor, Architect, and End User prior to installation.
H. Verify that the concrete subfloor surface pH level is within the 7 - 9 range.
I. Document the results indicating the slab is within manufacturer's tolerances for slab deviation.

3.2 *PREPARATION OF SURFACES*

A. Sand the entire surface of the concrete slab.
B. Sweep the concrete slab so as to remove all dirt and dust. If a sweeping compound is to be used it must be a sweeping compound that does not contain oil or other items that may inhibit the adhesive bond.
C. Slab must be dust free. In the event that dust impairs adhesive bond, priming the slab prior to application of adhesive may be necessary. Follow installation guidelines.

3.3 *OPTIONS FOR MOISTURE MITIGATION*

A. For projects with moisture conditions higher than the specified tolerances, **TARKOLAY** may be used for conditions that do not 98% per ASTM F2170. Use only approved adhesive as directed by the manufacturer. Tarkolay is available for roll goods only.

3.4 *INSTALLATION*

A. The installation area shall be closed to all traffic and activity for a period to be set by the indoor resilient athletic surfacing installer. The indoor resilient athletic surfacing installation shall not begin until the installer is familiar with the existing conditions.
B. All necessary precautions should be taken to minimize noise, smell, dust, the use of hazardous materials and any other items that may inconvenience others.
C. Install the indoor resilient athletic surfacing in strict accordance with the indoor resilient athletic surfacing manufacturer's written instructions.
D. Install the indoor resilient athletic surfacing minimizing cross seams. Provide a seam diagram during the submittal process for approval prior to installation.
E. Install appropriate threshold plates or transition strips where necessary.

3.5 *CLEANING*

A. Remove all unused materials, tools, and equipment and dispose of any debris properly. Clean the indoor resilient athletic surfacing in accordance with the manufacturer's instructions.

3.6 *PROTECTION*

If required, protect the indoor resilient athletic surfacing from damage using coverings approved by the manufacturer until acceptance of work by the customer or their authorized representative.

3.6 RELATED STANDARDS AND GUIDELINES

A. ASTM F2170 "Standard Test Method for Determining Relative Humidity In Concrete Floor Slabs Using In-Situ Probes"
B. ASTM F710 "Standard Practice for Preparing Concrete Floors to Receive Resilient Flooring"
C. ACI 302.2R-06 "Guideline for Concrete Slabs that Receive Moisture-Sensitive Flooring Materials"

END OF SECTION

SECTION 09 65 66
ARCHITECTURAL SPECIFICATIONS FOR INDOOR RESILIENT PORTABLE SURFACING

PART 1 – GENERAL

1.1 *SECTION INCLUDES*

A. Supply and installation of the indoor resilient portable multipurpose surfacing
B. Application of the game lines
C. References for the correct construction and preparation of concrete slabs to receive resilient flooring.

1.2 *SUBMITTALS*

A. Product Data:
Manufacturer's promotional brochures, specifications and installation instructions

B. Manufacturer Certifications:
1. Provide certification that accurately identifies the Original Equipment Manufacturer (OEM) of flooring furnished for this project including manufacturer's name, address and factory location.
2. Suppliers of private label flooring for this project must identify themselves as such and fully disclose the OEM information listed above.

C. Samples:
1. Submit for selection and approval three (3) sets of the indoor resilient portable multipurpose surfacing, manufacturer's brochures, samples or sample boards.

D. Closeout Submittals:
1. Submit three (3) copies of the indoor resilient portable multipurpose surfacing and manufacturer's maintenance instructions.
2. Submit three (3) copies of the material warranties as specified.

1.3 *QUALITY ASSURANCE*

A. Qualifications:

1. The indoor resilient portable multipurpose surfacing supplier shall be an established firm, experienced in the field, and appointed as a distributor by the manufacturer of the indoor resilient multipurpose surfacing.
2. The installer of the indoor resilient multipurpose surfacing shall have a minimum of five (5) years of experience in the field installing indoor resilient multipurpose surfacing.

1.4 *DELIVERY, STORAGE AND HANDLING*

A. Delivery:
Material shall not be delivered until all related work is in place and finished and/or proper storage facilities and conditions can be provided and guaranteed stable according to Tarkett Sports' recommendations.

B. Storage:
Store the material in a secure, clean and dry location. Maintain temperature between 55° and 85° Fahrenheit. Store resilient portable athletic flooring on flat surfaces.

1.5 *PROJECT/SITE CONDITIONS*

A. It is the responsibility of the general contractor/construction manager to maintain project/site conditions acceptable for the installation of the indoor resilient portable flooring.
B. The area in which the indoor resilient portable multipurpose surfacing will be installed shall be dry and weather tight. Permanent heat, light and ventilation shall be installed and operable.
C. All other trades shall have completed their work prior to the installation of the portable resilient athletic flooring. The general contractor or Construction Manager shall maintain a secure and clean working environment before, during and after the installation. Maintain a stable room temperature of at least 65°F for a minimum of one (1) week prior to, during and thereafter installation.
D. An effective low-permeance vapor barrier is placed directly beneath the concrete subfloor. For "on" or "below grade" installations, it is recommended to provide a permanent vapor barrier resistant to long term hydrostatic pressure/moisture exposure. Protrusions should be sealed to prevent moisture migration into the slab. Moisture should not be allowed to enter the slab after the completed construction.
E. Concrete subfloor should be no greater than 1/8" within a 10 ft. diameter.
F. Concrete subfloor must be clean and free of all foreign materials or objects.

1.6 *WARRANTY*

A. Materials:
The indoor resilient portable surfacing shall be covered by the manufacturer against product defect for 1 year.

1.7 *ADDITIONAL MATERIALS*

Furnish to the owner additional materials containing a total of at least 2% of each different color or design of the indoor resilient athletic surfacing used on the project.

PART 2 - PRODUCTS

2.1 *MANUFACTURERS*

The basis of the design for the indoor resilient portable surfacing shall be Omnisports EasyCourt as provided by Tarkett Sports.

2.2 *MATERIALS.*

Omnisports Easy Court Golden Maple is a prefabricated portable court system compromised of a patent pending process of construction, design,

and materials. This light weight, easy to install, and durable system provides quick installations with high performance characteristics.

A.) Physical properties of the indoor resilient portable surfacing shall conform to the following minimums:

Surface and Performance Properties:

Surface Thickness	…….	2mm
Color Option	……..	Golden Maple
Vertical Deformation	PASSED	ASTM F2772
Surface Finish Effect	PASSED	ASTM F2772 (80 – 110)
Ball Rebound	PASSED	ASTM F2772 > 90%
Shock Absorption	PASSED	ASTM F2772 Average 60%

.

Base Structure Properties:

Density	ASTM D375	2.8 lb./ft3
Dimensions	……	3.44ft x 5.17ft
Weight Base and Surface	……..	21 lb. per tile (approx.)
Thickness	ASTM D375	45mm (1.77”)
Total Thickness	……...	47mm (1.85”)

B). Game Line Paint Primer:
As approved by the indoor resilient athletic surfacing manufacturer.

C). Game Line Paint:
As approved by the indoor resilient athletic surfacing manufacturer. Colors are to be selected from the manufacturer’s standard range.

PART 3 - EXECUTION

3.1 *EXAMINATION*

A. It is the responsibility of the general contractor/construction manager to ensure that project/site conditions are acceptable for the installation of the indoor resilient portable athletic flooring.
B. Verify that the area in which the indoor resilient portable surfacing will be installed is dry and weather tight. Verify that permanent heat, light and ventilation is installed and operable.
C. Verify that all other work that could cause damage, dirt and dust or interrupt the normal pace of the indoor resilient portable athletic flooring installation is completed or suspended.
D. Verify that there is a stable room temperature of at least 65°F.
E. Verify that there are no foreign materials or objects on the subfloor and that the subfloor is clean and ready for installation.

3.2 *PREPARATION OF SURFACES*

A. Sand the entire surface of the concrete slab.
B. Sweep the concrete slab so as to remove all dirt and dust.

3.3 *INSTALLATION*

A. The installation area shall be closed to all traffic and activity for a period to be set by the indoor resilient portable surfacing installer.
B. Install the indoor resilient portable surfacing in strict accordance with the indoor resilient athletic surfacing manufacturer's written instructions.
C. Paint game lines using approved game line paint primer and game line paint in strict accordance with the game line paint manufacturer's instructions.
D. Install appropriate threshold plates or transition strips where necessary.

3.4 *CLEANING*

A. Remove all unused materials, tools, and equipment and dispose of any debris properly. Clean the indoor resilient athletic portable surfacing in accordance with the manufacturer's instructions.

3.5 *PROTECTION*

If required, protect the indoor resilient portable athletic surfacing from damage using coverings approved by the manufacturer until acceptance of work by the customer or their authorized representative.

3.6 RELATED STANDARDS AND GUIDELINES

A. ASTM F2170 "Standard Test Method for Determining Relative Humidity In Concrete Floor Slabs Using In-Situ Probes"
B. ASTM F710 "Standard Practice for Preparing Concrete Floors to Receive Resilient Flooring"

END OF SECTION

ARTIFICIAL GRASS FIELDTURF
EASYFIELD

PART 1 - GENERAL

1.1 SUMMARY

A. Furnish all materials and documentation necessary to install modular artificial grass FieldTurf EasyField as indicated on the plans and as specified herein; including components and accessories required for a complete installation.

1.2 REFERENCE STANDARDS

A. ASTM – American Society for Testing and Materials.
   1. EN 12235 – Vertical Ball Rebound
   2. EN 1177 (2008) – Critical Fall Height / HIC
   3. EN 12234 – Ball Roll
   4. AAA FIFA Method 04A – Shock Absorption
   5. AAA Method – Energy Restitution
   6. ASTM F355 - Gmax
   7. ASTM D2859-06: 2011 – Pill Flammability

1.3 SUBMITTALS

A. Substitutions: Other products are acceptable if in compliance with all requirements of these specifications. Submit alternate products to Architect for approval prior to bidding in accordance Section 01 25 13, Product Substitution Procedures.
   1. Provide substantiation that proposed system does not violate any other manufacturer's patents, patents allowed or patents pending.
   2. Provide a sample copy of insured, non-prorated warranty and insurance policy information.

B. Shop Drawings:
   1. Indicate field layout; field marking plan and details for the specified sports

C. Product Data:
   1. Submit data in sufficient detail to indicate compliance with the contract documents.
   2. Submit manufacturer's instructions for installation.
   3. Submit manufacturer's instructions for maintenance for the proper care and preventative maintenance of the synthetic turf system, including painting and markings.

D. Samples: Submit samples, minimum 12 x 12 inches, illustrating details of finished product in amounts as required by General Requirements, or as requested by Architect.

E. Product Certification:
   1. Submit manufacturer’s certification that products and materials comply with requirements of the specifications.
   2. Submit test results indicating compliance with Reference Standards.

F. List of existing installations: Submit list including respective Owner’s representative and

telephone number.

G. Warranties: Submit warranty and ensure that forms have been completed in Owner's name and registered with approved manufacturer.

1.4 QUALITY ASSURANCE

A. Comply with Section 01 43 00, Quality Assurance.

B. Manufacturer Qualifications: Company specializing in manufacturing products specified in this section. The turf contractor and/or the turf manufacturer:
   1. Shall have a minimum of 10 installations of the specified product in North America
   2. Shall have a minimum of 3000 artificial turf fields of any style installed in North America. Fields must be a minimum of 65000 square feet.
   3. Shall have installed a minimum of X fields in State.
   4. Shall have a minimum of 5 NFL game and/or practice fields in play for the previous year
   5. Shall have minimum 25 NCAA Division 1 game and/or practice fields installed.

C. Installer: Company shall specialize in performing the work of this section. The Contractor shall provide competent workmen skilled in this specific type of modular synthetic grass installation.
   1. The designated Supervisory Personnel on the project shall be certified, in writing by the turf manufacturer, as competent in the installation of turf material.
   2. Installer shall be certified by the manufacturer and licensed.
   3. The installer supervisor shall have a minimum of 5 years of experience as either a construction manager or a supervisor of synthetic turf installations.

D. Pre-Installation Conference: Conduct conference at project site at time to be determined by Architect. Review methods and procedures related to installation including, but not limited to, the following:
   1. Inspect and discuss existing conditions and preparatory work performed under other contracts.
   2. In addition to the Contractor and the installer, arrange for the attendance of installers affected by the Work, The Owner’s representative, and the Architect.

E. The Contractor shall verify special conditions required for the installation of the system.

F. The Contractor shall notify the Architect of any discrepancies.

1.5 DELIVERY, STORAGE, AND HANDLING

A. Comply with Section 01 60 00, Product Requirements.

B. Prevent contact with materials that may cause dysfunction.

C. Deliver and store components with labels intact and legible.

D. Store materials/components in a safe place, under cover, and elevated above grade.

E. Protect from damage during delivery, storage, handling and installation. Protect from damage by other trades.

F. Inspect all delivered materials and products to ensure they are undamaged and in good condition.

G. Comply with manufacturer's recommendations.

1.6 SEQUENCING AND SCHEDULING

A. Coordinate the Work with installation of work of related trades as the Work proceeds.

B. Sequence the Work in order to prevent deterioration of installed system.

1.7 WARRANTY AND GUARANTEE

A. See Section 01780 - Closeout Submittals, For Additional Warranty Requirements.

- The Contractor shall provide a warranty to the Owner that covers defects in materials and workmanship of the turf for a period of one (1) year from the date of substantial completion. The turf manufacturer must verify that their representative has inspected the installation and that the work conforms to the manufacturer's requirements. The manufacturer's warranty shall include general wear and damage caused from UV degradation. The warranty shall specifically exclude vandalism, and acts of God beyond the control of the Owner or the manufacturer. The warranty shall be non-prorated. The Contractor shall provide a warranty to the Owner that covers defects in the installation workmanship, and further warrant that the installation was done in accordance with both the manufacturer's recommendations and any written directives of the manufacturer's representative.
- 1-year warranty.
- Must cover full 100% replacement value of total square footage installed
- Policies that include self-insurance or self-retention clauses shall not be considered.
- Policy cannot include any form of deductible amount.
- Sample policy must be provided at time of bid to prove that policy is in force. A letter from an agent or a sample Certificate of Insurance will not be acceptable.

B. The artificial grass system must maintain a G-max of less than 200 for the life of the Warranty as per ASTM F1936.

1.8 MAINTENANCE SERVICE

A. Contractor shall train the Owner's facility maintenance staff in the use of the turf manufacturer's recommended maintenance equipment.

PART 2 - PRODUCTS

2.1 ACCEPTABLE SUPPLIER

A. Approved suppliers are as follows:

1. FieldTurf USA Inc.
   175 N. Industrial Blvd
   Calhoun, GA 30701
   P: 800-724-2969

Model: FieldTurf EasyField

2.2 MATERIALS AND PRODUCTS

A. Artificial grass FieldTurf system materials shall consist of the following:
   1. Carpet made of slit-film polyethylene fibers with thatch fiber tufted into a polypropylene backing.
   2. Glue, paint, seaming fabric and other materials used to install and mark the artificial grass FieldTurf.

B. The installed artificial grass slit-film FieldTurf shall have the following properties:

Standard	Property	Specification
ASTM D1577	Slit-Film Denier	10,000+
ASTM D1577	Thatch Denier	5,000
ASTM D5823	Pile Height	1.125”
ASTM D5793	Stitch Gauge	3/16”-1/4”
ASTM D5848	Pile Weight	72oz/square yard
ASTM D5848	Primary Backing	7oz/square yard
ASTM D5848	Secondary Backing	20oz/square yard
ASTM D5848	Total Weight	99oz/square yard
ASTM D1335	Tuft Bind (Without Infill)	8+ lbs
ASTM D5034	Grab Tear (Width)	200 lbs/force
ASTM D5034	Grab Tear (Length)	200 lbs/force
ASTM F355/F1936	Impact Attenuation (Gmax)	<200
	Modular Interlocking Shockpad	45mm
	Approximate Weight of Finished Panel	21 lbs

Variation of +/- 5% of above listed properties is within normal manufacturing tolerances

C. Carpet shall consist of slit-film fibers and thatch fibers tufted into a primary backing with a secondary backing.
   1. Turf pieces shall be adhered to the pad underlayment
   2. The finished turf panels shall be vertically interlocked with one another and loose laid onto the base.
   3. Turf panels shall be cut to fit any curved or irregular edge areas based on the agreed upon drawings and layout.

D. Backing:
   1. Primary backing shall be a polypropylene fabric
   2. Secondary backing shall consist of an application of urethane to lock the fiber tufts in place.

E. Each panel turf area shall be 17.78 square feet or 3.44ft X 5.17ft.
   1. Panels will be shipped on pallets. Pallets are not to be stacked on top of one another.

F. Lines, if needed, shall be painted with paint approved by the synthetic turf manufacturer.

G. Velcro is not an acceptable way of fastening the main body of turf carpet and/or turf panels to one another.

H. Edging options for panels (if relevant) must be taken into consideration prior to the order confirmation.

PART 3 - EXECUTION

3.1 EXAMINATION

A. Verify that all sub-base leveling is complete prior to installation.

B. Installer shall examine the surface to receive the synthetic turf and accept the sub-base planarity in writing prior to the beginning of installation.
   1. Acceptance is dependent upon the Owner's test results indicating base is in compliance with manufacturer's specifications.
   2. The surface shall be accepted by Installer as "clean" as installation commences and shall be maintained in that condition throughout the process.

C. Correct conditions detrimental to timely and proper completion of Work.

D. Do not proceed until unsatisfactory conditions are corrected.

E. Beginning of installation means acceptance of existing conditions.

3.2 PREPARATION

A. Prior to the beginning of installation, inspect the sub-base for tolerance to grade.

B. Sub-base acceptance shall be subject to receipt of test results (by others) for compaction and planarity that sub-base is in compliance with manufacturer's specifications and recommendations.

C. Dimensions of the field and locations for markings shall be measured by a registered surveyor to verify conformity to the specifications and applicable standards. A record of the finished field as-built measurements shall be made.

3.3 INSTALLATION - GENERAL

A. The installation shall be performed in full compliance with approved Shop Drawings.

B. The designated Supervisory personnel on the project must be certified, in writing by the turf manufacturer, as competent in the installation of this material.

3.4 INSTALLATION

A. Install at location(s) indicated, to comply with final shop drawings, manufacturers'/installer's instructions.

B. The Contractor shall strictly adhere to specified procedures. Any variance from these

requirements shall be provided in writing, by the manufacturer's on-site representative, and submitted to the Architect and/or Owner, verifying that the changes do not in any way affect the Warranty.

C. Turf shall be installed directly over the properly prepared base. Extreme care shall be taken to avoid disturbing the base.

D. Markings shall be painted in accordance with turf and paint manufacturers' recommendations. Number of applications will be dependent upon installation and field conditions.

E. Upon completion of installation, the finished field shall be inspected by the installation crew and an installation supervisor.

3.5 FIELD MARKINGS

A. Any field markings shall be applied in accordance with approved shop drawings.

3.6 ADJUSTMENT AND CLEANING

A. Do not permit traffic over unprotected surface.

B. All usable remnants of new material shall become the property of the Owner.

C. The Contractor shall keep the area clean throughout the project and clear of debris.

D. Surfaces, recesses, enclosures, and related spaces shall be cleaned as necessary to leave the work area in a clean, immaculate condition ready for immediate occupancy and use by the Owner.

3.7 PROTECTION

A. Protect installation throughout construction process until date of final completion.

HEALTHIERCHOICE®

100% HIGH DENSITY MEMORY FOAM CARPET CUSHION

DESCRIPTION
Premium 100% high density memory foam cushion for use under all carpet styles.

STYLE / SKU / ROLL SPECS
WHT180 – 6' x 30' roll,180 sq. ft., 20 sq. yd. (75.5 lbs.)
WHT270 – 6' x 45' roll, 270 sq. ft., 30 sq. yd. (110 lbs.)

MATERIAL
Frothed polyurethane – a visco-elastic "memory foam" material.

THICKNESS
0.5" (1/2")

DENSITY
10lbs/ft^3 (48.82kg/m^3)

SOUND RATING
Impact Insulation Class (ASTM E492-90) . . . . . 90 IIC

WATER RESISTANCE
British Spill Test Method E . . . . . Pass
Breathable Integral Skin Barrier, allows vapor to pass while blocking liquid spills, making clean-up easier and more effective.

INSULATION RATING
R-Factor (ASTM C518-10) 1.60
Excellent for radiant heated floors.

FIRE RATING
NBS Smoke Chamber . . . . . <100 max
Pill Test (FF 1-70) . . . . . Pass

DURABILITY
Compression Set . . . . . 7% max
Indentation Load Deflection (25%) . . . . . 4.20 lbs/ft^2
Indentation Load Deflection (65%) . . . . . 20.00 lbs/ft^2

INSTALLATION
Engineered for stretch-in installation. Install foam side up.

WARRANTY
Warranted for a lifetime to the original purchaser.

RENEWABLE CONTENT
IMade in part with eco-friendly soybean oil, lessening dependence on petrochemicals. This reduces global warming emissions and the need for foreign oil while supporting local farmers and local producers.
Applicable towards LEED Credit MR 6 – Rapidly Renewable Resources.

INDOOR AIR QUALITY
CRI Green Label certified. The only carpet cushion GREENGUARD Indoor Air Quality Certified® as a low emitting interior building material.
Applicable towards LEED Credit EQ 4.3 – Low Emitting Product.

ANTIMICROBIAL
Ultra-Fresh® Antimicrobial prevents mold, mildew, and bacterial growth while controlling dust mites for life-long odor free installation.

RECYCLABLE
Zero-Landfill Manufacturing waste, all materials are reused in products with recycled content. Post consumer recyclable, a valued commodity as recycled foam in the manufacturing of rebond padding.

NOTE: Specification values subject to a 7% manufacturing tolerance.

ultra-fresh | GREENGUARD | NATURAL RESOURCES | CRI GREEN LABEL +PLUS | ZERO% LANDFILL MANUFACTURING

HC WHITE

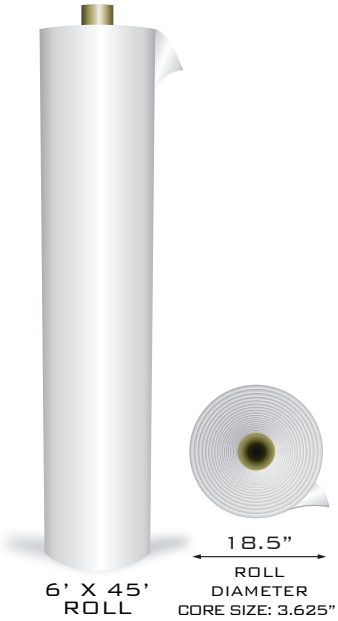

Healthier Choice Flooring | 401 Jones Street, Dalton GA 30720 | Phone (800) 872-8426 | Fax (706) 226-8293 | www.healthierchoice.com

SECTION 09 64 66
ARCHITECTURAL SPECIFICATIONS FOR INDOOR WOOD ATHLETIC FLOORING

PART 1 – GENERAL

1.1 *SECTION INCLUDES*

A. Supply and installation of MFMA Maple Wood Flooring System
B. Application of the game lines
C. References for the correct construction and preparation of concrete slabs to receive flooring.

1.2 *SUBMITTALS*

A. Product Data:
Manufacturer's promotional brochures, specifications and installation instructions
B. Samples:
1. Submit for selection and approval three (3) sets of brochures, samples or sample boards.
2. Submit color samples of all the available game line paint colors for selection and approval.
C. Closeout Submittals:
1. Submit three (3) copies of manufacturer's maintenance instructions.
2. Submit three (3) copies of the material and installation warranties as specified.

1.3 *QUALITY ASSURANCE*

A. Qualifications:
1. The indoor surfacing shall have been actively marketed for a minimum of five (5) years.
2. The MFMA Maple shall be produced by an FSC Certified Mill.
3. The MFMA Maple shall be produced by a US manufacturer.
4. The surfacing supplier shall be an established firm experienced in the field and appointed as a distributor by the manufacturer.
B. Certifications:
1. Installer to submit manufacturer's or distributor's certification attesting that they are an approved installer.
C. Testing:
Tests shall be relative for athletic use with certificates from independent testing resources to be made available upon request. Test results shall be no more than 5 years old and performed according to ASTM and/or EN standard testing procedures.

1.4 *DELIVERY, STORAGE AND HANDLING*

A. Delivery:
Material shall not be delivered until all related work is in place and finished and/or proper storage facilities and conditions can be provided and guaranteed stable according to FieldTurf USA, Inc. recommendations.
B. Storage:

Store the material in a secure, clean and dry location. A temperature range of 55° to 78° and a relative humidity of between 35% to 50% should be maintained.

1.5 *PROJECT/SITE CONDITIONS*

A. It is the responsibility of the general contractor/construction manager to maintain project/site conditions acceptable for the installation.
B. The area in which the surfacing will be installed shall be dry and weather tight. Permanent heat, light and ventilation shall be installed and operable. All other trades shall have completed their work prior to installation. All overhead work which includes the installation of mechanical work, lighting, backstops, scoreboards, etc., are installed. The general contractor or Construction Manager shall maintain a secure and clean working environment before, during and after the installation.
C. An effective low-permeance vapor barrier is placed directly beneath the concrete subfloor. For "on" or "below grade" installations, it is recommended to provide a permanent vapor barrier resistant to long term hydrostatic pressure/moisture emissions. Protrusions should be sealed to prevent moisture migration into the slab. Moisture should not be allowed to enter the slab after the completed construction.
D. Concrete substrate to be constructed and finished in accordance with MFMA recommendations. Slab's finish shall be no more than 1/8" deflection within a 10ft radius.
E. Concrete subfloor must be clean and free of all foreign materials or objects.
F. Concrete slab shall be fortified with continual steel reinforcement. Fiber reinforcement alone shall not be considered adequate fortification.

1.6 *WARRANTY*

A. Materials:
The maple flooring shall be covered by the manufacturer against product defects for 10 years.
B. Installation:
The installation shall be covered against poor workmanship and faulty installation by a two (2) year written, limited warranty provided by the contractor performing/overseeing the installation.

1.7 *ADDITIONAL MATERIALS*

Furnish to the owner additional materials containing a total of at least 1%.

PART 2 - PRODUCTS

2.1 *MANUFACTURERS*

The basis of the design for the surfacing is Clutch Court-FlexLock Panel as supplied by Tarkett Sports. All other installation accessories and related components must be either made or approved by the supplier. Other products may be approved as equal if deemed qualified and submitted in accordance with the General Conditions. Test reports confirming compliance from an

Independent Sports Laboratory must be provided along with samples, technical data, installation, maintenance, and warranty prior to acceptance as an alternative product.

2.2 *MATERIALS*

Clutch Court- FlexLock Panel
A prefabricated cross air ventilated lattice system incorporating an interlocking profile for ease of installation. Floating panels are 4' x 8' double layer of 1" x 6" pine strips spaced 3" and aligned at a 45° angle. All intersecting joints of panel are double screwed at the time of construction for greater dimensional stability.

Cushion underlayment shall be a densified ½" foam cushion as provided by FieldTurf USA, Inc.

1. Physical properties of the flooring system shall conform to the following minimums:

MFMA Maple Width	…….	2 ¼"
MFMA Maple Length	…….	Random
MFMA Maple Grade	…….	2nd or Better Northern Hard Maple
Maple Thickness	…….	25/32"
Total Thickness		2 ½"
Subfloor Construction	…….	Prefabricated FlexLock Panels as provided by Tarkett Sports
Force Reduction Shock Pad	…….	½" densified premium foam cushion
Force Reduction	…….	ASTM F2772 Category 4
Ball Bounce	…….	ASTM F2772 > 90%
Vapor Barrier	…….	Minimum 6 mil-overlapped 6"-12" and taped

2. Game Line Paint:
As approved by the finish manufacturer. Colors are to be selected from the manufacturer's standard range.

PART 3 - EXECUTION

3.1 *EXAMINATION*

A. It is the responsibility of the general contractor/construction manager to ensure that project/site conditions are acceptable for the installation.
B. Verify that the area is dry and weather tight. Verify that permanent heat, light, and ventilation are installed and operable.
C. Verify that all other work that could cause damage, dirt and dust, or interrupt the normal pace of the indoor resilient athletic flooring installation is completed.
D. Verify that temperature and humidity are within tolerances.

E. Verify that there are no foreign materials or objects on the subfloor and that the subfloor is clean and ready for installation.
F. Document the results indicating the slab is within manufacturer's tolerances for slab deviations and moisture emissions.

3.2 *PREPARATION OF SURFACES*
A. Sweep the concrete slab so as to remove all dirt and dust.
B. Remove debris or other contaminants that may affect installation.

3.3 *INSTALLATION*
A. The installation area shall be closed to all traffic and activity for a period to be set by the installer. The installation shall not begin until the installer is familiar with the existing conditions.
B. All necessary precautions should be taken to minimize noise, smell, dust, the use of hazardous materials and any other items that may inconvenience others.
C. Install in strict accordance with the manufacturer's written instructions.
D. Paint game lines using approved game line paint in strict accordance with the game line paint manufacturer's instructions.
E. Apply seal and finish coats according to manufacturer's instructions. Use only MFMA approved sealers and finishes.
F. Install appropriate threshold plates or transition strips where necessary.
G. Vented base is required. Install molded vented cove base along all vertical abutments. Pre-molded or field mitered outside corners are acceptable. Inside corners are to be field mitered. Corners and seams are to be installed flush with no gaps. Treat door casings or other vertical abutments not to receive vented cove according to manufacturer's recommendations.

3.4 *CLEANING*
A. Remove all unused materials, tools, and equipment and dispose of any debris properly.

3.5 *PROTECTION*
If required, protect the indoor resilient athletic surfacing from damage using coverings approved by the manufacturer until acceptance of work by the customer or their authorized representative.

3.5 RELATED STANDARDS AND GUIDELINES
A. ASTM F1869 "Standard Test Method for Measuring Moisture Evaporation Rate of Concrete Subfloor Using Anhydrous Calcium Chloride"
B. ACI 302.2R-06 "Guideline for Concrete Slabs that Receive Moisture-Sensitive Flooring Materials"
C. MFMA – Maple Flooring Manufacturer's Association

END OF SECTION

SECTION 09 64 66
ARCHITECTURAL SPECIFICATIONS FOR INDOOR WOOD ATHLETIC FLOORING

PART 1 – GENERAL

1.1 *SECTION INCLUDES*

A. Supply and installation of MFMA Maple Wood Flooring System
B. Application of the game lines
C. References for the correct construction and preparation of concrete slabs to receive flooring.

1.2 *SUBMITTALS*

A. Product Data:
Manufacturer's promotional brochures, specifications and installation instructions
B. Samples:
1. Submit for selection and approval three (3) sets of brochures, samples or sample boards.
2. Submit color samples of all the available game line paint colors for selection and approval.
C. Closeout Submittals:
1. Submit three (3) copies of manufacturer's maintenance instructions.
2. Submit three (3) copies of the material and installation warranties as specified.

1.3 *QUALITY ASSURANCE*

A. Qualifications:
1. The indoor surfacing shall have been actively marketed for a minimum of five (5) years.
2. The MFMA Maple shall be produced by an FSC Certified Mill.
3. The MFMA Maple shall be produced by a US manufacturer.
4. The surfacing supplier shall be an established firm experienced in the field and appointed as a distributor by the manufacturer.
B. Certifications:
1. Installer to submit manufacturer's or distributor's certification attesting that they are an approved installer.
C. Testing:
Tests shall be relative for athletic use with certificates from independent testing resources to be made available upon request. Test results shall be no more than 5 years old and performed according to ASTM and/or EN standard testing procedures.

1.4 *DELIVERY, STORAGE AND HANDLING*

A. Delivery:
Material shall not be delivered until all related work is in place and finished and/or proper storage facilities and conditions can be provided and guaranteed stable according to FieldTurf USA, Inc. recommendations.
B. Storage:

Store the material in a secure, clean and dry location. A temperature range of 55° to 78° and a relative humidity of between 35% to 50% should be maintained.

1.5 *PROJECT/SITE CONDITIONS*

A. It is the responsibility of the general contractor/construction manager to maintain project/site conditions acceptable for the installation.
B. The area in which the surfacing will be installed shall be dry and weather tight. Permanent heat, light and ventilation shall be installed and operable. All other trades shall have completed their work prior to installation. All overhead work which includes the installation of mechanical work, lighting, backstops, scoreboards, etc., are installed. The general contractor or Construction Manager shall maintain a secure and clean working environment before, during and after the installation.
C. An effective low-permeance vapor barrier is placed directly beneath the concrete subfloor. For "on" or "below grade" installations, it is recommended to provide a permanent vapor barrier resistant to long term hydrostatic pressure/moisture emissions. Protrusions should be sealed to prevent moisture migration into the slab. Moisture should not be allowed to enter the slab after the completed construction.
D. Concrete substrate to be constructed and finished in accordance with MFMA recommendations. Slab's finish shall be no more than 1/8" deflection within a 10ft radius.
E. Concrete subfloor must be clean and free of all foreign materials or objects.
F. Concrete slab shall be fortified with continual steel reinforcement. Fiber reinforcement alone shall not be considered adequate fortification.

1.6 *WARRANTY*

A. Materials:
The maple flooring shall be covered by the manufacturer against product defects for 10 years.
B. Installation:
The installation shall be covered against poor workmanship and faulty installation by a two (2) year written, limited warranty provided by the contractor performing/overseeing the installation.

1.7 *ADDITIONAL MATERIALS*

Furnish to the owner additional materials containing a total of at least 1%.

PART 2 - PRODUCTS

2.1 *MANUFACTURERS*

The basis of the design for the surfacing is Clutch Court-Performance Anchor as supplied by FieldTurf USA, Inc. All other installation accessories and related components must be either made or approved by the supplier. Other products may be approved as equal if deemed qualified and submitted in accordance with the General Conditions. Test reports confirming compliance from an

Independent Sports Laboratory must be provided along with samples, technical data, installation, maintenance, and warranty prior to acceptance as an alternative product.

2.2 *MATERIALS*

Clutch Court- Performance Anchor System

1. Physical properties of the flooring system shall conform to the following minimums:

MFMA Maple Width	…….	2 ¼”
MFMA Maple Length	…….	Random
Maple Thickness	…….	25/32”
Total System Thickness	…….	2 1/2”
Subfloor Construction	…….	Tarkett Sports engineered 4ft x 8ft panels.
Force Reduction Shock Pad	…….	¾” TPR Shock Pad supplied by Tarkett Sports
MFMA Maple Grade	…….	2nd or Better Northern Hard Maple
Vapor Barrier	…….	Minimum 6 mil-overlapped 6”-12” and taped
ASTM F2772 Classification	…….	Category 4

2. Game Line Paint:
As approved by the finish manufacturer. Colors are to be selected from the manufacturer’s standard range.

PART 3 - EXECUTION

3.1 *EXAMINATION*

A. It is the responsibility of the general contractor/construction manager to ensure that project/site conditions are acceptable for the installation.
B. Verify that the area is dry and weather tight. Verify that permanent heat, light, and ventilation are installed and operable.
C. Verify that all other work that could cause damage, dirt and dust, or interrupt the normal pace of the indoor resilient athletic flooring installation is completed.
D. Verify that temperature and humidity are within tolerances.
E. Verify that there are no foreign materials or objects on the subfloor and that the subfloor is clean and ready for installation.
F. Document the results indicating the slab is within manufacturer’s tolerances for slab deviations and moisture emissions.

3.2 *PREPARATION OF SURFACES*

A. Sweep the concrete slab so as to remove all dirt and dust.
B. Remove debris or other contaminants that may affect installation.

3.3 *INSTALLATION*

A. The installation area shall be closed to all traffic and activity for a period to be set by the installer. The installation shall not begin until the installer is familiar with the existing conditions.
B. All necessary precautions should be taken to minimize noise, smell, dust, the use of hazardous materials and any other items that may inconvenience others.
C. Install in strict accordance with the manufacturer's written instructions.
D. Paint game lines using approved game line paint in strict accordance with the game line paint manufacturer's instructions.
E. Apply seal and finish coats according to manufacturer's instructions. Use only MFMA approved sealers and finishes.
F. Install appropriate threshold plates or transition strips where necessary.
G. Vented base is required. Install molded vented cove base along all vertical abutments. Pre-molded or field mitered outside corners are acceptable. Inside corners are to be field mitered. Corners and seams are to be installed flush with no gaps. Treat door casings or other vertical abutments not to receive vented cove according to manufacturer's recommendations.

3.4 *CLEANING*

A. Remove all unused materials, tools, and equipment and dispose of any debris properly.

3.5 *PROTECTION*

If required, protect the indoor resilient athletic surfacing from damage using coverings approved by the manufacturer until acceptance of work by the customer or their authorized representative.

3.5 RELATED STANDARDS AND GUIDELINES

A. ASTM F1869 "Standard Test Method for Measuring Moisture Evaporation Rate of Concrete Subfloor Using Anhydrous Calcium Chloride"
B. ACI 302.2R-06 "Guideline for Concrete Slabs that Receive Moisture-Sensitive Flooring Materials"
C. MFMA – Maple Flooring Manufacturer's Association

END OF SECTION

SECTION 09 64 66
ARCHITECTURAL SPECIFICATIONS FOR INDOOR WOOD ATHLETIC FLOORING

PART 1 – GENERAL

1.1 *SECTION INCLUDES*

A. Supply and installation of MFMA Maple Wood Flooring System
B. Application of the game lines
C. References for the correct construction and preparation of concrete slabs to receive flooring.

1.2 *SUBMITTALS*

A. Product Data:
Manufacturer's promotional brochures, specifications and installation instructions
B. Samples:
1. Submit for selection and approval three (3) sets of brochures, samples or sample boards.
2. Submit color samples of all the available game line paint colors for selection and approval.
C. Closeout Submittals:
1. Submit three (3) copies of manufacturer's maintenance instructions.
2. Submit three (3) copies of the material and installation warranties as specified.

1.3 *QUALITY ASSURANCE*

A. Qualifications:
1. The indoor surfacing shall have been actively marketed for a minimum of five (5) years.
2. The MFMA Maple shall be produced by an FSC Certified Mill.
3. The MFMA Maple shall be produced by a US manufacturer.
4. The surfacing supplier shall be an established firm experienced in the field and appointed as a distributor by the manufacturer.
B. Certifications:
1. Installer to submit manufacturer's or distributor's certification attesting that they are an approved installer.
C. Testing:
Tests shall be relative for athletic use with certificates from independent testing resources to be made available upon request. Test results shall be no more than 5 years old and performed according to ASTM and/or EN standard testing procedures.

1.4 *DELIVERY, STORAGE AND HANDLING*

A. Delivery:
Material shall not be delivered until all related work is in place and finished and/or proper storage facilities and conditions can be provided and guaranteed stable according to FieldTurf USA, Inc. recommendations.
B. Storage:

Store the material in a secure, clean and dry location. A temperature range of 55° to 78° and a relative humidity of between 35% to 50% should be maintained.

1.5 *PROJECT/SITE CONDITIONS*

A. It is the responsibility of the general contractor/construction manager to maintain project/site conditions acceptable for the installation.
B. The area in which the surfacing will be installed shall be dry and weather tight. Permanent heat, light and ventilation shall be installed and operable. All other trades shall have completed their work prior to installation. All overhead work which includes the installation of mechanical work, lighting, backstops, scoreboards, etc., are installed. The general contractor or Construction Manager shall maintain a secure and clean working environment before, during and after the installation.
C. An effective low-permeance vapor barrier is placed directly beneath the concrete subfloor. For "on" or "below grade" installations, it is recommended to provide a permanent vapor barrier resistant to long term hydrostatic pressure/moisture emissions. Protrusions should be sealed to prevent moisture migration into the slab. Moisture should not be allowed to enter the slab after the completed construction.
D. Concrete substrate to be constructed and finished in accordance with MFMA recommendations. Slab's finish shall be no more than 1/8" deflection within a 10ft radius.
E. Concrete subfloor must be clean and free of all foreign materials or objects.
F. Concrete slab shall be fortified with continual steel reinforcement. Fiber reinforcement alone shall not be considered adequate fortification.

1.6 *WARRANTY*

A. Materials:
The maple flooring shall be covered by the manufacturer against product defects for 10 years.
B. Installation:
The installation shall be covered against poor workmanship and faulty installation by a two (2) year written, limited warranty provided by the contractor performing/overseeing the installation.

1.7 *ADDITIONAL MATERIALS*

Furnish to the owner additional materials containing a total of at least 1%.

PART 2 - PRODUCTS

2.1 *MANUFACTURERS*

The basis of the design for the surfacing is Clutch Court-Performance as supplied by FieldTurf USA, Inc. All other installation accessories and related components must be either made or approved by the supplier. Other products may be approved as equal if deemed qualified and submitted in accordance with the General Conditions. Test reports confirming compliance from an

Independent Sports Laboratory must be provided along with samples, technical data, installation, maintenance, and warranty prior to acceptance as an alternative product.

2.2 *MATERIALS*

Clutch Court- Performance System

1. Physical properties of the flooring system shall conform to the following minimums:

MFMA Maple Width	…….	2 ¼”
MFMA Maple Length	…….	Random
Maple Thickness	…….	25/32”
Total Thickness		2 ½”
Subfloor Construction	…….	2 layers of 15/32” APA rated plywood minimum of 4 ply per panel
Force Reduction Shock Pad	…….	¾” TPR Shock Pad supplied by Tarkett Sports
MFMA Maple Grade	…….	2nd or Better Northern Hard Maple
Vapor Barrier	…….	Minimum 6 mil-overlapped 6”-12” and taped
ASTM F2772 Classification	…….	Class 5

2. Game Line Paint:
As approved by the finish manufacturer. Colors are to be selected from the manufacturer’s standard range.

PART 3 - EXECUTION

3.1 *EXAMINATION*

A. It is the responsibility of the general contractor/construction manager to ensure that project/site conditions are acceptable for the installation.
B. Verify that the area is dry and weather tight. Verify that permanent heat, light, and ventilation are installed and operable.
C. Verify that all other work that could cause damage, dirt and dust, or interrupt the normal pace of the indoor resilient athletic flooring installation is completed.
D. Verify that temperature and humidity are within tolerances.
E. Verify that there are no foreign materials or objects on the subfloor and that the subfloor is clean and ready for installation.
F. Document the results indicating the slab is within manufacturer’s tolerances for slab deviations and moisture emissions.

3.2 *PREPARATION OF SURFACES*

A. Sweep the concrete slab so as to remove all dirt and dust.
B. Remove debris or other contaminants that may affect installation.

3.3 *INSTALLATION*

A. The installation area shall be closed to all traffic and activity for a period to be set by the installer. The installation shall not begin until the installer is familiar with the existing conditions.
B. All necessary precautions should be taken to minimize noise, smell, dust, the use of hazardous materials and any other items that may inconvenience others.
C. Install in strict accordance with the manufacturer's written instructions.
D. Paint game lines using approved game line paint in strict accordance with the game line paint manufacturer's instructions.
E. Apply seal and finish coats according to manufacturer's instructions. Use only MFMA approved sealers and finishes.
F. Install appropriate threshold plates or transition strips where necessary.
G. Vented base is required. Install molded vented cove base along all vertical abutments. Pre-molded or field mitered outside corners are acceptable. Inside corners are to be field mitered. Corners and seams are to be installed flush with no gaps. Treat door casings or other vertical abutments not to receive vented cove according to manufacturer's recommendations.

3.4 *CLEANING*

A. Remove all unused materials, tools, and equipment and dispose of any debris properly.

3.5 *PROTECTION*

If required, protect the indoor resilient athletic surfacing from damage using coverings approved by the manufacturer until acceptance of work by the customer or their authorized representative.

3.5 RELATED STANDARDS AND GUIDELINES

A. ASTM F1869 "Standard Test Method for Measuring Moisture Evaporation Rate of Concrete Subfloor Using Anhydrous Calcium Chloride"
B. ACI 302.2R-06 "Guideline for Concrete Slabs that Receive Moisture-Sensitive Flooring Materials"
C. MFMA – Maple Flooring Manufacturer's Association

END OF SECTION

SECTION 09 64 66
ARCHITECTURAL SPECIFICATIONS FOR INDOOR WOOD ATHLETIC FLOORING

PART 1 – GENERAL

1.1 *SECTION INCLUDES*

A. Supply and installation of MFMA Maple Wood Flooring System
B. Application of the game lines
C. References for the correct construction and preparation of concrete slabs to receive flooring.

1.2 *SUBMITTALS*

A. Product Data:
Manufacturer's promotional brochures, specifications and installation instructions
B. Samples:
1. Submit for selection and approval three (3) sets of brochures, samples or sample boards.
2. Submit color samples of all the available game line paint colors for selection and approval.
C. Closeout Submittals:
1. Submit three (3) copies of manufacturer's maintenance instructions.
2. Submit three (3) copies of the material and installation warranties as specified.

1.3 *QUALITY ASSURANCE*

A. Qualifications:
1. The indoor surfacing shall have been actively marketed for a minimum of five (5) years.
2. The MFMA Maple shall be produced by an FSC Certified Mill.
3. The MFMA Maple shall be produced by a US manufacturer.
4. The surfacing supplier shall be an established firm experienced in the field and appointed as a distributor by the manufacturer.
B. Certifications:
1. Installer to submit manufacturer's or distributor's certification attesting that they are an approved installer.
C. Testing:
Tests shall be relative for athletic use with certificates from independent testing resources to be made available upon request. Test results shall be no more than 5 years old and performed according to ASTM and/or EN standard testing procedures.

1.4 *DELIVERY, STORAGE AND HANDLING*

A. Delivery:
Material shall not be delivered until all related work is in place and finished and/or proper storage facilities and conditions can be provided and guaranteed stable according to FieldTurf USA, Inc. recommendations.
B. Storage:

Store the material in a secure, clean and dry location. A temperature range of 55° to 78° and a relative humidity of between 35% to 50% should be maintained.

1.5 *PROJECT/SITE CONDITIONS*

A. It is the responsibility of the general contractor/construction manager to maintain project/site conditions acceptable for the installation.
B. The area in which the surfacing will be installed shall be dry and weather tight. Permanent heat, light and ventilation shall be installed and operable. All other trades shall have completed their work prior to installation. All overhead work which includes the installation of mechanical work, lighting, backstops, scoreboards, etc., are installed. The general contractor or Construction Manager shall maintain a secure and clean working environment before, during and after the installation.
C. An effective low-permeance vapor barrier is placed directly beneath the concrete subfloor. For "on" or "below grade" installations, it is recommended to provide a permanent vapor barrier resistant to long term hydrostatic pressure/moisture emissions. Protrusions should be sealed to prevent moisture migration into the slab. Moisture should not be allowed to enter the slab after the completed construction.
D. Concrete substrate to be constructed and finished in accordance with MFMA recommendations. Slab's finish shall be no more than 1/8" deflection within a 10ft radius.
E. Concrete subfloor must be clean and free of all foreign materials or objects.
F. Concrete slab shall be fortified with continual steel reinforcement. Fiber reinforcement alone shall not be considered adequate fortification.

1.6 *WARRANTY*

A. Materials:
The maple flooring shall be covered by the manufacturer against product defects for 10 years.
B. Installation:
The installation shall be covered against poor workmanship and faulty installation by a two (2) year written, limited warranty provided by the contractor performing/overseeing the installation.

1.7 *ADDITIONAL MATERIALS*

Furnish to the owner additional materials containing a total of at least 1%.

PART 2 - PRODUCTS

2.1 *MANUFACTURERS*

The basis of the design for the surfacing is Clutch Court-Trainer 1 as supplied by FieldTurf USA, Inc. All other installation accessories and related components must be either made or approved by the supplier. Other products may be approved as equal if deemed qualified and submitted in accordance with the General Conditions. Test reports confirming compliance from an Independent

Sports Laboratory must be provided along with samples, technical data, installation, maintenance, and warranty prior to acceptance as an alternative product.

2.2 *MATERIALS*

Clutch Court- Trainer 1

1. Physical properties of the flooring system shall conform to the following minimums:

MFMA Maple Width	…….	2 1/8”
MFMA Maple Length	…….	Random
Maple Thickness	…….	25/32”
MFMA Maple Grade	…….	2nd or Better Northern Hard Maple
Total Thickness		2 5/8”
Subfloor Construction	…….	2” x 3” Pine Sleepers 4’ or 8’ length. Spaced 12” OC. over 3/8” Synthetic Trainer Cushion spaced 9” along length.
Force Reduction	…….	ASTM F2772 Category 2
Ball Bounce		ASTM F2772 > 90%
Vapor Barrier	…….	Minimum 6 mil-overlapped 6”-12” and taped
Finish	……..	As selected from MFMA Certified finish providers.

2. Game Line Paint:

As approved by the finish manufacturer. Colors are to be selected from the manufacturer’s standard range.

PART 3 - EXECUTION

3.1 *EXAMINATION*

A. It is the responsibility of the general contractor/construction manager to ensure that project/site conditions are acceptable for the installation.
B. Verify that the area is dry and weather tight. Verify that permanent heat, light, and ventilation are installed and operable.
C. Verify that all other work that could cause damage, dirt and dust, or interrupt the normal pace of the indoor resilient athletic flooring installation is completed.
D. Verify that temperature and humidity are within tolerances.
E. Verify that there are no foreign materials or objects on the subfloor and that the subfloor is clean and ready for installation.
F. Document the results indicating the slab is within manufacturer’s tolerances for slab deviations and moisture emissions.

3.2 *PREPARATION OF SURFACES*

A. Sweep the concrete slab so as to remove all dirt and dust.
B. Remove debris or other contaminants that may affect installation.

3.3 *INSTALLATION*

A. The installation area shall be closed to all traffic and activity for a period to be set by the installer. The installation shall not begin until the installer is familiar with the existing conditions.
B. All necessary precautions should be taken to minimize noise, smell, dust, the use of hazardous materials and any other items that may inconvenience others.
C. Install in strict accordance with the manufacturer's written instructions.
D. Paint game lines using approved game line paint in strict accordance with the game line paint manufacturer's instructions.
E. Apply seal and finish coats according to manufacturer's instructions. Use only MFMA approved sealers and finishes.
F. Install appropriate threshold plates or transition strips where necessary.
G. Vented base is required. Install molded vented cove base along all vertical abutments. Pre-molded or field mitered outside corners are acceptable. Inside corners are to be field mitered. Corners and seams are to be installed flush with no gaps. Treat door casings or other vertical abutments not to receive vented cove according to manufacturer's recommendations.

3.4 *CLEANING*

A. Remove all unused materials, tools, and equipment and dispose of any debris properly.

3.5 *PROTECTION*

If required, protect the indoor resilient athletic surfacing from damage using coverings approved by the manufacturer until acceptance of work by the customer or their authorized representative.

3.5 RELATED STANDARDS AND GUIDELINES

A. ASTM F1869 "Standard Test Method for Measuring Moisture Evaporation Rate of Concrete Subfloor Using Anhydrous Calcium Chloride"
B. ACI 302.2R-06 "Guideline for Concrete Slabs that Receive Moisture-Sensitive Flooring Materials"
C. MFMA – Maple Flooring Manufacturer's Association

END OF SECTION

SECTION 09 64 66
ARCHITECTURAL SPECIFICATIONS FOR INDOOR WOOD ATHLETIC FLOORING

PART 1 – GENERAL

1.1 *SECTION INCLUDES*

A. Supply and installation of MFMA Maple Wood Flooring System
B. Application of the game lines
C. References for the correct construction and preparation of concrete slabs to receive flooring.

1.2 *SUBMITTALS*

A. Product Data:
Manufacturer's promotional brochures, specifications and installation instructions
B. Samples:
1. Submit for selection and approval three (3) sets of brochures, samples or sample boards.
2. Submit color samples of all the available game line paint colors for selection and approval.
C. Closeout Submittals:
1. Submit three (3) copies of manufacturer's maintenance instructions.
2. Submit three (3) copies of the material and installation warranties as specified.

1.3 *QUALITY ASSURANCE*

A. Qualifications:
1. The indoor surfacing shall have been actively marketed for a minimum of five (5) years.
2. The MFMA Maple shall be produced by an FSC Certified Mill.
3. The MFMA Maple shall be produced by a US manufacturer.
4. The surfacing supplier shall be an established firm experienced in the field and appointed as a distributor by the manufacturer.
B. Certifications:
1. Installer to submit manufacturer's or distributor's certification attesting that they are an approved installer.
C. Testing:
Tests shall be relative for athletic use with certificates from independent testing resources to be made available upon request. Test results shall be no more than 5 years old and performed according to ASTM and/or EN standard testing procedures.

1.4 *DELIVERY, STORAGE AND HANDLING*

A. Delivery:
Material shall not be delivered until all related work is in place and finished and/or proper storage facilities and conditions can be provided and guaranteed stable according to FieldTurf USA, Inc. recommendations.
B. Storage:

Store the material in a secure, clean and dry location. A temperature range of 55° to 78° and a relative humidity of between 35% to 50% should be maintained.

1.5 *PROJECT/SITE CONDITIONS*

A. It is the responsibility of the general contractor/construction manager to maintain project/site conditions acceptable for the installation.
B. The area in which the surfacing will be installed shall be dry and weather tight. Permanent heat, light and ventilation shall be installed and operable. All other trades shall have completed their work prior to installation. All overhead work which includes the installation of mechanical work, lighting, backstops, scoreboards, etc., are installed. The general contractor or Construction Manager shall maintain a secure and clean working environment before, during and after the installation.
C. An effective low-permeance vapor barrier is placed directly beneath the concrete subfloor. For "on" or "below grade" installations, it is recommended to provide a permanent vapor barrier resistant to long term hydrostatic pressure/moisture emissions. Protrusions should be sealed to prevent moisture migration into the slab. Moisture should not be allowed to enter the slab after the completed construction.
D. Concrete substrate to be constructed and finished in accordance with MFMA recommendations. Slab's finish shall be no more than 1/8" deflection within a 10ft radius.
E. Concrete subfloor must be clean and free of all foreign materials or objects.
F. Concrete slab shall be fortified with continual steel reinforcement. Fiber reinforcement alone shall not be considered adequate fortification.

1.6 *WARRANTY*

A. Materials:
The maple flooring shall be covered by the manufacturer against product defects for 10 years.
B. Installation:
The installation shall be covered against poor workmanship and faulty installation by a two (2) year written, limited warranty provided by the contractor performing/overseeing the installation.

1.7 *ADDITIONAL MATERIALS*

Furnish to the owner additional materials containing a total of at least 1%.

PART 2 - PRODUCTS

2.1 *MANUFACTURERS*

The basis of the design for the surfacing is Clutch Court-Trainer 2 as supplied by FieldTurf USA, Inc. All other installation accessories and related components must be either made or approved by the supplier. Other products may be approved as equal if deemed qualified and submitted in accordance with the General Conditions. Test reports confirming compliance from an Independent

Sports Laboratory must be provided along with samples, technical data, installation, maintenance, and warranty prior to acceptance as an alternative product.

2.2 *MATERIALS*

Clutch Court- Trainer 2

1. Physical properties of the flooring system shall conform to the following minimums:

MFMA Maple Width	…….	2 ¼”
MFMA Maple Length	…….	Random
Maple Thickness	…….	25/32”
MFMA Maple Grade	…….	2nd or Better Northern Hard Maple
Total Thickness		3 1/8”
Subfloor Construction	…….	1 layer of 15/32” APA rated 4 ply plywood over 2” x 3” Pine Sleepers 4’ or 8’ in length. Spaced 12” OC over 3/8” Synthetic Trainer Cushion spaced 12” along length.
Force Reduction	…….	ASTM F2772 Category 2
Ball Bounce		ASTM F2772 > 90%
Vapor Barrier	…….	Minimum 6 mil-overlapped 6”-12” and taped
Finish	……..	As selected from MFMA Certified finish providers.

2. Game Line Paint:
As approved by the finish manufacturer. Colors are to be selected from the manufacturer’s standard range.

PART 3 - EXECUTION

3.1 *EXAMINATION*

A. It is the responsibility of the general contractor/construction manager to ensure that project/site conditions are acceptable for the installation.
B. Verify that the area is dry and weather tight. Verify that permanent heat, light, and ventilation are installed and operable.
C. Verify that all other work that could cause damage, dirt and dust, or interrupt the normal pace of the indoor resilient athletic flooring installation is completed.
D. Verify that temperature and humidity are within tolerances.
E. Verify that there are no foreign materials or objects on the subfloor and that the subfloor is clean and ready for installation.
F. Document the results indicating the slab is within manufacturer’s tolerances for slab deviations and moisture emissions.

3.2 *PREPARATION OF SURFACES*

A. Sweep the concrete slab so as to remove all dirt and dust.
B. Remove debris or other contaminants that may affect installation.

3.3 *INSTALLATION*

A. The installation area shall be closed to all traffic and activity for a period to be set by the installer. The installation shall not begin until the installer is familiar with the existing conditions.
B. All necessary precautions should be taken to minimize noise, smell, dust, the use of hazardous materials and any other items that may inconvenience others.
C. Install in strict accordance with the manufacturer's written instructions.
D. Paint game lines using approved game line paint in strict accordance with the game line paint manufacturer's instructions.
E. Apply seal and finish coats according to manufacturer's instructions. Use only MFMA approved sealers and finishes.
F. Install appropriate threshold plates or transition strips where necessary.
G. Vented base is required. Install molded vented cove base along all vertical abutments. Pre-molded or field mitered outside corners are acceptable. Inside corners are to be field mitered. Corners and seams are to be installed flush with no gaps. Treat door casings or other vertical abutments not to receive vented cove according to manufacturer's recommendations.

3.4 *CLEANING*

A. Remove all unused materials, tools, and equipment and dispose of any debris properly.

3.5 *PROTECTION*

If required, protect the indoor resilient athletic surfacing from damage using coverings approved by the manufacturer until acceptance of work by the customer or their authorized representative.

3.5 RELATED STANDARDS AND GUIDELINES

A. ASTM F1869 "Standard Test Method for Measuring Moisture Evaporation Rate of Concrete Subfloor Using Anhydrous Calcium Chloride"
B. ACI 302.2R-06 "Guideline for Concrete Slabs that Receive Moisture-Sensitive Flooring Materials"
C. MFMA – Maple Flooring Manufacturer's Association

END OF SECTION

SECTION 09 64 66
ARCHITECTURAL SPECIFICATIONS FOR INDOOR WOOD ATHLETIC FLOORING

PART 1 – GENERAL

1.1 *SECTION INCLUDES*

A. Supply and installation of MFMA Maple Wood Flooring System
B. Application of the game lines
C. References for the correct construction and preparation of concrete slabs to receive flooring.

1.2 *SUBMITTALS*

A. Product Data:
Manufacturer's promotional brochures, specifications and installation instructions
B. Samples:
1. Submit for selection and approval three (3) sets of brochures, samples or sample boards.
2. Submit color samples of all the available game line paint colors for selection and approval.
C. Closeout Submittals:
1. Submit three (3) copies of manufacturer's maintenance instructions.
2. Submit three (3) copies of the material and installation warranties as specified.

1.3 *QUALITY ASSURANCE*

A. Qualifications:
1. The indoor surfacing shall have been actively marketed for a minimum of five (5) years.
2. The MFMA Maple shall be produced by an FSC Certified Mill.
3. The MFMA Maple shall be produced by a US manufacturer.
4. The surfacing supplier shall be an established firm experienced in the field and appointed as a distributor by the manufacturer.
B. Certifications:
1. Installer to submit manufacturer's or distributor's certification attesting that they are an approved installer.
C. Testing:
Tests shall be relative for athletic use with certificates from independent testing resources to be made available upon request. Test results shall be no more than 5 years old and performed according to ASTM and/or EN standard testing procedures.

1.4 *DELIVERY, STORAGE AND HANDLING*

A. Delivery:
Material shall not be delivered until all related work is in place and finished and/or proper storage facilities and conditions can be provided and guaranteed stable according to FieldTurf USA, Inc. recommendations.
B. Storage:

Store the material in a secure, clean and dry location. A temperature range of 55° to 78° and a relative humidity of between 35% to 50% should be maintained.

1.5 *PROJECT/SITE CONDITIONS*

A. It is the responsibility of the general contractor/construction manager to maintain project/site conditions acceptable for the installation.
B. The area in which the surfacing will be installed shall be dry and weather tight. Permanent heat, light and ventilation shall be installed and operable. All other trades shall have completed their work prior to installation. All overhead work which includes the installation of mechanical work, lighting, backstops, scoreboards, etc., are installed. The general contractor or Construction Manager shall maintain a secure and clean working environment before, during and after the installation.
C. An effective low-permeance vapor barrier is placed directly beneath the concrete subfloor. For "on" or "below grade" installations, it is recommended to provide a permanent vapor barrier resistant to long term hydrostatic pressure/moisture emissions. Protrusions should be sealed to prevent moisture migration into the slab. Moisture should not be allowed to enter the slab after the completed construction.
D. Concrete substrate to be constructed and finished in accordance with MFMA recommendations. Slab's finish shall be no more than 1/8" deflection within a 10ft radius.
E. Concrete subfloor must be clean and free of all foreign materials or objects.
F. Concrete slab shall be fortified with continual steel reinforcement. Fiber reinforcement alone shall not be considered adequate fortification.

1.6 *WARRANTY*

A. Materials:
The maple flooring shall be covered by the manufacturer against product defects for 10 years.
B. Installation:
The installation shall be covered against poor workmanship and faulty installation by a two (2) year written, limited warranty provided by the contractor performing/overseeing the installation.

1.7 *ADDITIONAL MATERIALS*

Furnish to the owner additional materials containing a total of at least 1%.

PART 2 - PRODUCTS

2.1 *MANUFACTURERS*

The basis of the design for the surfacing is Clutch Court-Trainer 3 as supplied by FieldTurf USA, Inc. All other installation accessories and related components must be either made or approved by the supplier. Other products may be approved as equal if deemed qualified and submitted in accordance with the General Conditions. Test reports confirming compliance from an Independent

Sports Laboratory must be provided along with samples, technical data, installation, maintenance, and warranty prior to acceptance as an alternative product.

2.2 *MATERIALS*

Clutch Court- Trainer 3

1. Physical properties of the flooring system shall conform to the following minimums:

MFMA Maple Width	…….	2 ¼”
MFMA Maple Length	…….	Random
Maple Thickness	…….	25/32”
Total Thickness		2 ½”
Subfloor Construction	…….	2 layers of 15/32” APA rated plywood minimum of 4 ply per panel
Force Reduction Shock Pad	…….	3/8” Resilient Shock Pad supplied by Tarkett Sports
MFMA Maple Grade	…….	2nd or Better Northern Hard Maple
Vapor Barrier	…….	Minimum 6 mil-overlapped 6”-12” and taped

2. Game Line Paint:

As approved by the finish manufacturer. Colors are to be selected from the manufacturer’s standard range.

PART 3 - EXECUTION

3.1 *EXAMINATION*

A. It is the responsibility of the general contractor/construction manager to ensure that project/site conditions are acceptable for the installation.
B. Verify that the area is dry and weather tight. Verify that permanent heat, light, and ventilation are installed and operable.
C. Verify that all other work that could cause damage, dirt and dust, or interrupt the normal pace of the indoor resilient athletic flooring installation is completed.
D. Verify that temperature and humidity are within tolerances.
E. Verify that there are no foreign materials or objects on the subfloor and that the subfloor is clean and ready for installation.
F. Document the results indicating the slab is within manufacturer’s tolerances for slab deviations and moisture emissions.

3.2 *PREPARATION OF SURFACES*

A. Sweep the concrete slab so as to remove all dirt and dust.
B. Remove debris or other contaminants that may affect installation.

3.3 *INSTALLATION*

A. The installation area shall be closed to all traffic and activity for a period to be set by the installer. The installation shall not begin until the installer is familiar with the existing conditions.
B. All necessary precautions should be taken to minimize noise, smell, dust, the use of hazardous materials and any other items that may inconvenience others.
C. Install in strict accordance with the manufacturer's written instructions.
D. Paint game lines using approved game line paint in strict accordance with the game line paint manufacturer's instructions.
E. Apply seal and finish coats according to manufacturer's instructions. Use only MFMA approved sealers and finishes.
F. Install appropriate threshold plates or transition strips where necessary.
G. Vented base is required. Install molded vented cove base along all vertical abutments. Pre-molded or field mitered outside corners are acceptable. Inside corners are to be field mitered. Corners and seams are to be installed flush with no gaps. Treat door casings or other vertical abutments not to receive vented cove according to manufacturer's recommendations.

3.4 *CLEANING*

A. Remove all unused materials, tools, and equipment and dispose of any debris properly.

3.5 *PROTECTION*

If required, protect the indoor resilient athletic surfacing from damage using coverings approved by the manufacturer until acceptance of work by the customer or their authorized representative.

3.5 RELATED STANDARDS AND GUIDELINES

A. ASTM F1869 "Standard Test Method for Measuring Moisture Evaporation Rate of Concrete Subfloor Using Anhydrous Calcium Chloride"
B. ACI 302.2R-06 "Guideline for Concrete Slabs that Receive Moisture-Sensitive Flooring Materials"
C. MFMA – Maple Flooring Manufacturer's Association

END OF SECTION

SECTION 09 65 66
ARCHITECTURAL SPECIFICATIONS FOR INDOOR RESILIENT ATHLETIC SURFACING

PART 1 – GENERAL

1.1 *SECTION INCLUDES*

A. Supply and installation of the indoor resilient multipurpose surfacing
B. Application of the game lines
C. References for the correct construction and preparation of concrete slabs to receive resilient flooring.

1.2 *SUBMITTALS*

A. Product Data:
   1. Manufacturer's promotional brochures, specifications and installation instructions
B. Manufacturer Certifications:
   1. Provide certification that accurately identifies the Original Equipment Manufacturer (OEM) of flooring furnished for this project including manufacturer's name, address and factory location.
   2. Suppliers of private label flooring for this project must identify themselves as such and fully disclose the OEM information listed above.
   3. All "manufacturer" requirements in these specifications must be complied with by the OEM, including warranties, certifications, qualifications, product data, test results, environmental requirements, performance data, etc.
C. Samples:
   1. Submit for selection and approval three (3) sets of the indoor resilient multipurpose surfacing, manufacturer's brochures, samples or sample boards of all of the available colors, textures and styles.
   2. Submit color samples of all the available game line paint colors for selection and approval.
D. Closeout Submittals:
   1. Submit three (3) copies of the indoor resilient multipurpose surfacing and manufacturer's maintenance instructions.
   2. Submit three (3) copies of the material and installation warranties as specified.

1.3 *QUALITY ASSURANCE*

A. Qualifications:
   1. The indoor resilient multipurpose surfacing shall have been actively marketed for a minimum of ten (10) years.
   2. The indoor resilient multipurpose surfacing shall be manufactured in an ISO 9001 certified plant.
   3. The indoor resilient multipurpose surfacing shall be manufactured in an ISO 14001 certified plant.
   4. The indoor resilient multipurpose surfacing supplier shall be an established firm, experienced in the field, and competent in the techniques required by the manufacturer.
   5. The installer of the indoor resilient multipurpose surfacing shall have a minimum of five (5) years of experience in the field installing indoor resilient multipurpose surfacing and have worked on at least five (5) projects of similar size, type and complexity.

B. Certifications:
   1. Installer to submit the indoor resilient athletic surfacing manufacturer's or distributor's certification attesting that they are an approved installer of the indoor resilient multipurpose surfacing.
   2. The ind**o**or resilient multipurpose surfacing manufacturer to submit official ISO 9001 certification for the facility in which the indoor resilient multipurpose surfacing is manufactured.

C. Testing:
   Tests shall be relative for multi-purpose use with certificates from independent testing resources to be made available upon request. Test results shall be performed according to ASTM standard testing procedures including ASTM F2772 "Standard Specification for Athletic Performance Properties of Indoor Sports Floor Systems".

1.4 *DELIVERY, STORAGE AND HANDLING*

A. Delivery:
   Material shall not be delivered until all related work is in place and finished and/or proper storage facilities and conditions can be provided and guaranteed stable according to FieldTurf USA, Inc. recommendations.

B. Storage:
   1. Store the material in a secure, clean and dry location.
   2. Maintain temperature between 55° and 85° Fahrenheit.
   3. Store the indoor resilient athletic surfacing rolls in an upright position on a smooth flat surface immediately upon delivery to jobsite.
   4. Rolls shipped in rigid protective cardboard containers can be laid horizontally prior to unpacking and installation.

1.5 *PROJECT/SITE CONDITIONS*

A. It is the responsibility of the general contractor/construction manager to maintain project/site conditions acceptable for the installation of the indoor resilient multipurpose flooring.

B. The area in which the indoor resilient multipurpose surfacing will be installed shall be dry and weather tight. Permanent heat, light and ventilation shall be installed and operable.

C. All other trades shall have completed their work prior to the installation of the resilient athletic flooring. The general contractor or construction manager shall maintain a secure and clean working environment before, during and after the installation.

D. Maintain a stable room temperature of at least 65°F for a minimum of one (1) week prior to, during and thereafter installation.

E. An effective low-permeance vapor barrier is placed directly beneath the concrete subfloor. For "on" or "below grade" installations, it is recommended to provide a permanent vapor barrier resistant to long term hydrostatic pressure/moisture exposure. Protrusions should be sealed to prevent moisture migration into the slab. Moisture should not be allowed to enter the slab after the completed construction.

F. Concrete subfloor surface pH level within the 7 to 11 range dependent upon installation type.

G. Concrete subfloor should be no greater than 1/8" within a 10 ft diameter. This tolerance can be measured in accordance with ASTM E1155. A specified (F_F) of 50 and an (F_L) of 30 should reach this degree of floor flatness and floor level. There is no numerical correlation between F numbers and the deviation from the straight

edge. However, the above specified numbers should achieve a flat floor with minimal deviation in the slab. Reference ACI 117 and ACI 302.1R. The general contractor should provide a certificate of compliance with the above recommendations.

H. Concrete subfloor must be clean and free of all foreign materials or objects including, but not limited to, curing compounds and sealers.

I. Fill cracks, grooves, voids, depressions, and other minor imperfections. Follow the manufacturer's directions. Moveable joints must be treated utilizing specific transitioning joint devices depending upon the architect's recommendations. Follow current ASTM F710 guidelines for the preparation of concrete slabs to receive resilient flooring.

J. Refer to ACI 302.2R "Guidelines for Concrete Slabs that Receive Moisture-Sensitive Flooring Materials" for concrete design and construction.

K. Concrete slab shall be fortified with continual steel reinforcement. Fiber reinforcement alone shall not be considered adequate fortification.

1.6 *WARRANTY*

A. Special Limited Warranty:
   1. Manufacturer's standard form in which manufacturer agrees to repair or replace sports flooring including labor that fails within specified warranty period.

B. Material warranty must be direct from the product manufacturer.
   1. Material warranties must come from original manufacturer or division thereof. Private label warranties from distributors or brokers are not valid. Supply original point of manufacturing upon request.

C. Failures include, but are not limited to, the following:
   1. Material manufacturing defects.
   2. Surface wear and deterioration to the point of wear-through of wear layer per ASTM F410/ASTM F1303.
   3. Failure due to substrate moisture exposure exceeding 98 percent relative humidity when tested according to ASTM F2170.

D. Warranty Period:
   1. <u>For material defects and surface wear-through:</u> **25** years from date of substantial completion.
   2. <u>For moisture vapor tolerance:</u> **25** years from date of substantial completion.

E. Installer's Limited Warranty:
   1. Installer's standard form in which installer agrees to repair or replace sports flooring that fails due to poor workmanship or faulty installation within the specified warranty period.
   2. Warranty Period: 2 years from date of substantial completion.

1.7 *ADDITIONAL MATERIALS*

A. Furnish to the owner additional materials containing a total of at least 1% of each different color or design of the indoor resilient athletic surfacing used on the project.

1.8 *LEED™ CERTIFICATION*

A. The indoor resilient athletic surfacing should be able to help this facility to achieve points towards *LEED™ certification.* Flooring system must be certified by FloorScore.
B. LEED categories positively affected by the indoor resilient athletic surfacing:

LEED™ V4 Credit		Contribution
Materials & Resources: Building Product Disclosure & Optimization (BPDO)		
MRc3: Sourcing of Raw Materials	Options 1 & 2	2 Points
MRc4: Material Ingredients	Option 1	1 Point
MRc5: Construction and Demolition Management	Reclamation and Recycling	ReStart® Program
Indoor Environmental Quality		
EQc2: Low-Emitting Materials	TVOC: 0.5 mg/m3 or less	FloorScore®

PART 2 - PRODUCTS

2.1 *MANUFACTURERS*

A. The basis of the design for the indoor resilient multipurpose surfacing is Omnisports 2.0 mm as manufactured by Tarkett.
B. All other installation accessories and related components must be either made or approved by the indoor resilient athletic surfacing manufacturer.
C. Other products may be approved as equal if deemed qualified and submitted in accordance with the General Conditions.
D. Test reports confirming compliance from an independent sports laboratory must be provided along with samples, technical data, installation, maintenance, and warranty prior to acceptance as an alternative product.

2.2 *MATERIALS*

A. Omnisports 2.0 mm - Prefabricated sport surface 2.0 mm (0.08″) with wood flooring design and slightly textured embossed surface as supplied by Tarkett.
   1. Embossing of wood design and solid colors must be the same; varying embossing or surface textures will not be allowed.
   2. Printing of wood design shall closely resemble standard wood strip flooring in size, color, board length, and grain appearance.
   3. The wood design shall be protected by a clear layer of pure PVC (Polyvinyl Chloride) and TopClean xp, a factory-applied UV cured urethane treatment.
   4. Intermediate layers shall be fortified with a non-woven fiberglass grid for increased dimensional stability.
   5. Field constructed products will not be accepted.

B. Physical properties of the indoor resilient athletic surfacing shall conform to the following minimums:

Width	—	6′ 6″ (2 m)
Length	—	85′ (25.9m) approx.
Wear Layer	—	2 mm
Total Thickness	—	2.0 mm
Wear Layer	Type 1– Grade 1	ASTM F1303/F410
Rolling Load	PASSED	0.30 (EN 1569 {11/1999})
Surface Finish Effect	PASSED	ASTM F2772 (80 – 110)
Chemical Resistance	Excellent	ASTM F925
Impact Resistance	PASSED	EN 1717
Abrasion Resistance	PASSED	0.10 (EN ISO 5470-1 {06/1999})
Static Load Limit	PASSED	ASTM F970- Load 175 Lbs
Ball Rebound	PASSED	ASTM F2772 > 90%
Fire Rating	PASSED	ASTM E648 Class 1
Phthalate-free technology	—	YES
REACH Compliant	—	YES
Heavy Metals	—	NO
ISO 9001	—	YES
ISO 14001	—	YES

1. Color: As available from the indoor resilient athletic surfacing manufacturer's standard range.
2. Hardwood Design Series: High definition printing for a realistic wood surface appearance as available from the indoor resilient athletic surfacing manufacturer's standard range.
3. Texture: Texture to remain consistent between solid colors and wood design when blending colors.

C. Welding Rod: As supplied by the indoor resilient athletic surfacing manufacturer or supplier.
   1. Color to blend with the indoor resilient athletic surfacing color or design.
   2. All seams shall be welded to create a monolithic and impermeable surface.

D. Adhesive: As approved by the indoor resilient athletic surfacing manufacturer.

E. Game Line Paint and Primer: As approved by the indoor resilient athletic surfacing manufacturer.

PART 3 - EXECUTION

3.1 *EXAMINATION*

A. It is the responsibility of the general contractor/construction manager to ensure that project/site conditions are acceptable for the installation of the indoor resilient athletic flooring.
B. Verify that the area in which the indoor resilient athletic surfacing will be installed is dry and weather tight. Verify that permanent heat, light and ventilation are installed and operable.
C. Verify that all other work that could cause damage, dirt and dust or interrupt the normal pace of the indoor resilient athletic flooring installation is completed or suspended.
D. Verify that there is a stable room temperature of at least 65◦F.
E. Verify that there are no foreign materials or objects on the subfloor and that the subfloor is clean and ready for installation.
F. *Direct Full Spread Adhering to Concrete Subfloor Multi-Set : moisture content less than 83% RH when tested per ASTM F2170.*
G. Follow Fieldturf USA, Inc. installation recommendations.
H. Do not average the results of the tests. Report all field test results in writing to the General Contractor, Architect, and End User prior to installation.
I. Verify that the concrete subfloor surface pH level is within the 7 - 11 range.
J. Document the results confirming the slab is within manufacturer's tolerances for slab deviation.

3.2 *PREPARATION OF SURFACES*

A. Sand the entire surface of the concrete slab.
B. Sweep the concrete slab so as to remove all dirt and dust. If a sweeping compound is to be used it must be a sweeping compound that does not contain oil or other items that may inhibit the adhesive bond.
C. Slab must be dust free. In the event that dust impairs adhesive bond, priming the slab prior to application of adhesive may be necessary. Follow installation guidelines.
D. Follow OSHA guidelines.

3.3 *INSTALLATION*

A. The installation area shall be closed to all traffic and activity for a period to be set by the indoor resilient athletic surfacing installer. The indoor resilient athletic surfacing installation shall not begin until the installer is familiar with the existing conditions.
B. All necessary precautions should be taken to minimize noise, smell, dust, the use of hazardous materials and any other items that may inconvenience others.
C. Install the indoor resilient athletic surfacing in strict accordance with the indoor resilient athletic surfacing manufacturer's written instructions.
D. Install the indoor resilient athletic surfacing minimizing cross seams. Provide a seam diagram during the submittal process for approval prior to installation. Vinyl Sheet Flooring Seams: Comply with ASTM F 1516. Rout joints and heat weld to permanently and seamlessly fuse sections together.
E. Paint game lines using approved game line paint primer and game line paint in strict accordance with the game line paint manufacturer's instructions.
F. Install appropriate threshold plates or transition strips where necessary.

2.0 *CLEANING*

A. Remove all unused materials, tools, and equipment and dispose of any debris properly. Clean the indoor resilient athletic surfacing in accordance with the manufacturer's instructions.

3.6 *PROTECTION*

A. If required, protect the indoor resilient athletic surfacing from damage using coverings approved by the manufacturer until acceptance of work by the customer or their authorized representative.

3.7 *RELATED STANDARDS AND GUIDELINES*

A. ASTM F2170 "Standard Test Method for Determining Relative Humidity In Concrete Floor Slabs Using In-Situ Probes"
B. ASTM F710 "Standard Practice for Preparing Concrete Floors to Receive Resilient Flooring"
C. ACI 302.2R-06 "Guideline for Concrete Slabs that Receive Moisture-Sensitive Flooring Materials"
D. ASTM F2772-11 "Standard Specification for Athletic Performance Properties of Indoor Sports Floor Systems"

END OF SECTION

SECTION 09 65 66
ARCHITECTURAL SPECIFICATIONS FOR INDOOR RESILIENT ATHLETIC SURFACING

PART 1 – GENERAL

1.1 *SECTION INCLUDES*

A. Supply and installation of the indoor resilient multipurpose surfacing
B. Application of the game lines
C. References for the correct construction and preparation of concrete slabs to receive resilient flooring.

1.2 *SUBMITTALS*

A. Product Data:
   1. Manufacturer's promotional brochures, specifications and installation instructions
B. Manufacturer Certifications:
   1. Provide certification that accurately identifies the Original Equipment Manufacturer (OEM) of flooring furnished for this project including manufacturer's name, address and factory location.
   2. Suppliers of private label flooring for this project must identify themselves as such and fully disclose the OEM information listed above.
   3. All "manufacturer" requirements in these specifications must be complied with by the OEM, including warranties, certifications, qualifications, product data, test results, environmental requirements, performance data, etc.
C. Samples:
   1. Submit for selection and approval three (3) sets of the indoor resilient multipurpose surfacing, manufacturer's brochures, samples or sample boards of all of the available colors, textures and styles.
   2. Submit color samples of all the available game line paint colors for selection and approval.
D. Closeout Submittals:
   1. Submit three (3) copies of the indoor resilient multipurpose surfacing and manufacturer's maintenance instructions.
   2. Submit three (3) copies of the material and installation warranties as specified.

1.3 *QUALITY ASSURANCE*

A. Qualifications:
   1. The indoor resilient multipurpose surfacing shall have been actively marketed for a minimum of ten (10) years.
   2. The indoor resilient multipurpose surfacing shall be manufactured in an ISO 9001 certified plant.
   3. The indoor resilient multipurpose surfacing shall be manufactured in an ISO 14001 certified plant.
   4. The indoor resilient multipurpose surfacing supplier shall be an established firm, experienced in the field, and competent in the techniques required by the manufacturer.
   5. The installer of the indoor resilient multipurpose surfacing shall have a minimum of five (5) years of experience in the field installing indoor resilient multipurpose surfacing and have worked on at least five (5) projects of similar size, type and complexity.

B. Certifications:
   1. Installer to submit the indoor resilient dance floor surfacing manufacturer's certification attesting that they are a trained installer of the indoor resilient multipurpose surfacing.
   2. The indoor resilient multipurpose surfacing manufacturer to submit official ISO 9001 certification for the facility in which the indoor resilient multipurpose surfacing is manufactured.

C. Testing:
   1. Tests shall be relative for multi-purpose use with certificates from independent testing resources to be made available upon request.
   2. Test results shall be no more than 5 years old and performed according to ASTM standard testing procedures.

1.4 *DELIVERY, STORAGE AND HANDLING*

A. Delivery:
   Material shall not be delivered until all related work is in place and finished and/or proper storage facilities and conditions can be provided and guaranteed stable according to Tarkett Sports / FieldTurf USA, Inc. recommendations.

B. Storage:
   1. Store the material in a secure, clean and dry location.
   2. Maintain temperature between 55° and 85° Fahrenheit.
   3. Store the indoor resilient dance floor surfacing rolls in an upright position on a smooth flat surface immediately upon delivery to jobsite.
   4. Rolls shipped in rigid protective cardboard containers can be laid horizontally prior to unpacking and installation.

1.5 *PROJECT/SITE CONDITIONS*

A. It is the responsibility of the general contractor/construction manager to maintain project/site conditions acceptable for the installation of the indoor resilient multipurpose flooring.

B. The area in which the indoor resilient multipurpose surfacing will be installed shall be dry and weather tight. Permanent heat, light and ventilation shall be installed and operable.

C. All other trades shall have completed their work prior to the installation of the resilient dance floor flooring. The general contractor or construction manager shall maintain a secure and clean working environment before, during and after the installation.

D. Maintain a stable room temperature of at least 65°F for a minimum of one (1) week prior to, during and thereafter installation.

E. An effective low-permeance vapor barrier is placed directly beneath the concrete subfloor. For "on" or "below grade" installations, it is recommended to provide a permanent vapor barrier resistant to long term hydrostatic pressure/moisture exposure. Protrusions should be sealed to prevent moisture migration into the slab. Moisture should not be allowed to enter the slab after the completed construction.

F. Concrete subfloor surface pH level within the 7 to 9 range dependent upon installation type.

G. Concrete subfloor should be no greater than 1/8" within a 10 ft diameter. This tolerance can be measured in accordance with ASTM E1155. A specified (F_F) of 50 and an (F_L) of 30 should reach this degree of floor flatness and floor level. There is no numerical correlation between F numbers and the deviation from the straight

edge. However, the above specified numbers should achieve a flat floor with minimal deviation in the slab. Reference ACI 117 and ACI 302.1R. The general contractor should provide a certificate of compliance with the above recommendations.

H. Concrete subfloor must be clean and free of all foreign materials or objects including, but not limited to, curing compounds and sealers.

I. Fill cracks, grooves, voids, depressions, and other minor imperfections. Follow the manufacturer's directions. Moveable joints must be treated utilizing specific transitioning joint devices depending upon the architect's recommendations. Follow current ASTM F710 guidelines for the preparation of concrete slabs to receive resilient flooring.

J. Refer to ACI 302.2R "Guidelines for Concrete Slabs that Receive Moisture-Sensitive Flooring Materials" for concrete design and construction.

K. Concrete slab shall be fortified with continual steel reinforcement. Fiber reinforcement alone shall not be considered adequate fortification.

1.6 *WARRANTY*

A. Special Limited Warranty:
   1. Manufacturer's standard form in which manufacturer agrees to repair or replace sports flooring including labor that fails within specified warranty period.

B. Material warranty must be direct from the product manufacturer.
   1. Material warranties from separate or third party insurance providers are not valid.
   2. Material warranties must come from original manufacturer or division thereof. Private label warranties from distributors or brokers are not valid. Supply original point of manufacturing upon request.

C. Failures include, but are not limited to, the following:
   1. Material manufacturing defects.
   2. Surface wear and deterioration to the point of wear-through of wear layer per ASTM F410/ASTM F1303.
   3. Failure due to substrate moisture exposure exceeding 90 percent relative humidity when tested according to ASTM F2170.

D. Warranty Period:
   1. <u>For material defects and surface wear-through:</u> **10** years from date of substantial completion.
   2. <u>For moisture vapor tolerance:</u> **10** years from date of substantial completion.

E. Installer's Limited Warranty:
   1. Installer's standard form in which installer agrees to repair or replace sports flooring that fails due to poor workmanship or faulty installation within the specified warranty period.
   2. Warranty Period: 2 years from date of substantial completion.

1.7 *ADDITIONAL MATERIALS*

A. Furnish to the owner additional materials containing a total of at least 1% of each different color or design of the indoor resilient dance floor surfacing used on the project.

PART 2 - PRODUCTS

2.1 *MATERIALS*

A. Prefabricated dance floor surfacing 3.5 mm with slightly textured embossed surface.
   1. Intermediate layers shall be fortified with a non-woven fiberglass grid for increased dimensional stability.
   2. The foam force reduction layer shall be high-density closed cell PVC foam with honeycomb embossing, and is applied in one continuous manufacturing process.
   3. Laminated or adhered foam layers will not be allowed.
   4. Field constructed products will not be accepted.

B. Adhesive moisture mitigation combination. Provide non-solvent reactive topically applied moisture mitigation/adhesive according to manufacturer's recommendations.

C. Physical properties of the indoor resilient dance floor surfacing shall conform to the following minimums:

Width	—	6′ 6″ (2 m)
Length	—	49′ (15 m) approx.
Wear Layer	—	2 mm
Total Thickness	—	3.5 mm
Wear Layer	Type 1– Grade 1	ASTM F1303/F410
Force Reduction	PASSED	ASTM F2772 Class 1
Slip Resistance	P3	AS 4586
Surface Finish Effect	PASSED	ASTM F2772 (80 – 110)
Abrasion Volume Loss	Group T: ≤2.0 mm3	EN 660: Part 2
Chemical Resistance	Excellent	ASTM F925
Impact Resistance	PASSED	EN 1717
Abrasion Resistance	PASSED	0.10 (EN ISO 5470-1 {06/1999})
Static Load Limit	PASSED	ASTM F970- Load 175 Lbs
Sound Insulation	Excellent	+/= 19 dB (ISO 717/2)
In-Room Sound Insulation	Excellent	61dB (NF S31-074)
Fire Rating	PASSED	ASTM E648 Class 1
Phthalate-free technology	—	YES
REACH Compliant	—	YES
Heavy Metals	—	NO
ISO 9001	—	YES
ISO 14001	—	YES

   1. Color: As available from the indoor resilient dance floor surfacing manufacturer's standard range.

C. Welding Rod: As supplied by the indoor resilient dance floor surfacing manufacturer or supplier.
   1. Color to blend with the indoor resilient dance floor surfacing color or design.
   2. All seams shall be welded to create a monolithic and impermeable surface.

D. Adhesive: As approved by the indoor resilient dance floor surfacing manufacturer.

PART 3 - EXECUTION

3.1 *EXAMINATION*

A. It is the responsibility of the general contractor/construction manager to ensure that project/site conditions are acceptable for the installation of the indoor resilient dance floor surfacing.
B. Verify that the area in which the indoor resilient dance floor surfacing will be installed is dry and weather tight. Verify that permanent heat, light and ventilation are installed and operable.
C. Verify that all other work that could cause damage, dirt and dust or interrupt the normal pace of the indoor resilient dance flooring installation is completed or suspended.
D. Verify that there is a stable room temperature of at least 65◦F.
E. Verify that there are no foreign materials or objects on the subfloor and that the subfloor is clean and ready for installation.
F. *Direct Full Spread Adhering to Concrete Subfloor: moisture content less than 83% RH when tested per ASTM F2170.*
G. Follow Tarkett Sports / FieldTurf USA, Inc. installation recommendations.
H. Do not average the results of the tests. Report all field test results in writing to the General Contractor, Architect, and End User prior to installation.
I. Verify that the concrete subfloor surface pH level is within the 7 - 10 range.
J. Document the results confirming the slab is within manufacturer's tolerances for slab deviation.

3.2 *PREPARATION OF SURFACES*

A. Sand the entire surface of the concrete slab.
B. Sweep the concrete slab so as to remove all dirt and dust. If a sweeping compound is to be used it must be a sweeping compound that does not contain oil or other items that may inhibit the adhesive bond.
C. Slab must be dust free. In the event that dust impairs adhesive bond, priming the slab prior to application of adhesive may be necessary. Follow installation guidelines.
D. Follow OSHA guidelines.

3.3 *INSTALLATION*

A. The installation area shall be closed to all traffic and activity for a period to be set by the indoor resilient dance floor surfacing installer. The indoor resilient dance floor surfacing installation shall not begin until the installer is familiar with the existing conditions.
B. All necessary precautions should be taken to minimize noise, smell, dust, the use of hazardous materials and any other items that may inconvenience others.
C. Install the indoor resilient dance floor surfacing in strict accordance with the indoor resilient dance floor surfacing manufacturer's written instructions.
D. Install the indoor resilient dance floor surfacing minimizing cross seams. Provide a seam diagram during the submittal process for approval prior to installation. Vinyl Sheet Flooring Seams: Comply with ASTM F 1516. Rout joints and heat weld to permanently and seamlessly fuse sections together.
E. Install appropriate threshold plates or transition strips where necessary.

3.5 *CLEANING*

A. Remove all unused materials, tools, and equipment and dispose of any debris properly. Clean the indoor resilient dance floor surfacing in accordance with the manufacturer's instructions.

3.6 *PROTECTION*

A. If required, protect the indoor resilient dance floor surfacing from damage using coverings approved by the manufacturer until acceptance of work by the customer or their authorized representative.

3.7 *RELATED STANDARDS AND GUIDELINES*

A. ASTM F2170 "Standard Test Method for Determining Relative Humidity In Concrete Floor Slabs Using In-Situ Probes"
B. ASTM F710 "Standard Practice for Preparing Concrete Floors to Receive Resilient Flooring"
C. ACI 302.2R-06 "Guideline for Concrete Slabs that Receive Moisture-Sensitive Flooring Materials"
D. ASTM F2772-11 "Standard Specification for Athletic Performance Properties of Indoor Sports Floor Systems"

END OF SECTION

OMNISPORTS MULTIFLEX Technical Data Sheet

Description

MultiFlex is a versatile synthetic flooring ideal for multi-purpose applications. This system is designed to accommodate a wide variety sports, events and activities. MultiFlex delivers leading durability and smooth surface texture for easy maintenance.

TARKETT SPORTS 25 YEARS WARRANTY

PHTHALATE FREE Technology*

*except recycled content

PROPERTY	STANDARD	VALUE
PHYSICAL DESCRIPTION		
Material	N/A	PVC/Vinyl - Synthetic
Surface treatment	N/A	Pure Rock™ PU protection
Thickness	EN 428 / En 429	6.5 mm (0.256”)
Wear layer thickness	N/A	2.0 mm (0.078”)
Roll length	EN 426/EN 427	20.5 m (67.25’)
Roll width	EN 426/EN 427	2 m (6.5’)
Weight	EN 430	9.46 lb/m2 (0.88 lb/ft2)
Available colours	N/A	2 Woodgrain + 11 solid colours
SPORTS CHARACTERISTICS		
System category	N/A	Point-Elastic
Force Reduction (shock absorption)	ASTM F2772-11	Class 2
Vertical Deformation	ASTM F2772-11	Passed
Ball Rebound	ASTM F2772-11	Passed
Surface Finish Effect	ASTM F2772-11	Passed
TECHNICAL CHARACTERISTICS		
Rolling load	EN 1569	≤ 0.5 mm (no degradation)
Impact resistance	EN 1517	No degradation
Sound insulation (below room)	ISO 717/02	≥ 20 dB
TVOC after 28 days	ISO 1600	≤100µg/m³
Impact sound insulation	ISO 140-8 / ISO 717-2	> 20
Dimensional stability (exposure to heat)	EN ISO 23999	≤ 0.4%
Curling (exposure to heat)	EN ISO 23999	≤ 8mm
Light resistance	ISO 105-B02	≥ 6
Floor heating possibility	N/A	27°C
Microbial resistance	ASTM G21 (backing)	No growth
Reaction to fire	CAN/ULC S102.2	FSC 135/SDV 348
Phthalate-free technology	N/A	Yes
ISO Factory	N/A	ISO factory 9001, 14001 and OSHAS 18001
Warranty	N/A	25-year wear layer & product defect coverage

Note: Technical information is subject to change without notice. The data is for information purposes only. For more detail, please contact us.

Warranty Protection

25-year wear layer and product defect coverage plus 25-year moisture tolerance coverage. Refer to sample warranty document for complete coverage.

Environmental Facts and LEED

For environmental facts and LEED credits, visit: https://www.tarkettsportsindoor.com/wp-content/uploads/2020/02/Booklets-OMNISPORTS-LEED-TS-Indoor-FEB2020.pdf

Maintenance Instructions

For a complete maintenance guide, visit: https://www.tarkettsportsindoor.com/wp-content/uploads/2021/03/Omnisports-Care-and-Maintenance-DEC2020.pdf

Installation Methods

- GreenLay™: perimeter glue installation requiring only 2% of the surface area to be glued with Tarkett’s solvent-free Multi-Poxy adhesive (moisture tolerance: 92% RH per ASTM F2170)
- Full Adhesive: installation using Tarkett’s Multi-Poxy adhesive, HS Sports Spray, or Multi-Set acrylic adhesive over the entire area (moisture tolerance: 98% RH using Multi-Poxy, 98% RH using HS Sports Spray, 83% using Multi-Set per ASTM F2170)
- Tarkolay: installation over moisture barrier using Multi-Poxy adhesive (no moisture testing required)

Tarkett SPORTS INDOOR

OMNISPORTS MULTIFLEX Technical Data Sheet

Available Colors

Pure Maple

Pure Oak*

Sapphire

Topaz

Turquoise

Graphite

Garnet

Amber

Coral

Citrine

Jade

Emerald

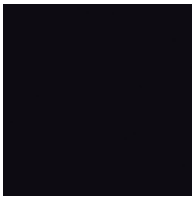
Onyx

*This pattern has a 3” wide plank. Maple patterns have a width of 2 1/4”.

The colors presented here are representations only. An actual sample is recommended for exact color evaluation and matching. Other Custom Colors available. Contact your Regional Sales Manager.

888.364.6541
tarkettsportsindoor.com

Tarkett SPORTS INDOOR

OMNISPORTS MULTIFLEX Fiche technique

Description

MultiFlex est un revêtement sportif polyvalent, idéal pour plusieurs applications. Ce système est conçu pour accueillir une grande variété de sports, d'événements et d'activités. MultiFlex offre une durabilité de premier ordre et une texture de surface lisse pour un entretien facile.

TARKETT SPORTS 25 ANS GARANTIE

PHTHALATE FREE Technology
*except recycled content

PROPRIÉTÉ	NORME	VALEUR
DESCRIPTION PHYSIQUE		
Matériel	N/A	PVC/vinyle - Synthetique
Surface treatment	N/A	Protection PU Pure Rock™
Épaisseur	EN 428 / En 429	6,5 mm (0,256 po)
Épaisseur de la couche d'usure	N/A	2,0 mm (0,078 po)
Longueur du rouleau	EN 426/EN 427	20,5 m (67,25 pi)
Largeur du rouleau	EN 426/EN 427	2 m (6,5 pi)
Poids	EN 430	9,46 lbs/m^2 (0,88 lbs/pi^2)
Couleurs disponibles	N/A	2 Woodgrain + 11 couleurs solides
CARACTÉRISTIQUES SPORT		
Catégorie de système	N/A	Point-Elastic
Réduction des forces	ASTM F2772-11	Classe 2
Déformation verticale	ASTM F2772-11	Réussi
Rebond du ballon	ASTM F2772-11	Réussi
Effet du fini de surface	ASTM F2772-11	Réussi
CARACTÉRISTIQUES TECHNIQUES		
Charge roulante	EN 1569	≤ 0,5 mm (aucune dégradation)
Résistance aux impacts	EN 1517	Aucune dégradation
Isolation sonore sous la pièce	ISO 717/02	≥ 20 dB
TVOC après 28 jours	ISO 1600	≤100 µg/m³
Isolation aux bruits d'impact	ISO 140-8 / ISO 717-2	> 20
Stabilité dimensionnelle (exposition à la chaleur)	EN ISO 23999	≤ 0,4%
Curling (exposure to heat)	EN ISO 23999	≤ 8 mm
Light resistance	ISO 105-B02	≥ 6
Floor heating possibility	N/A	27°C
Résistance microbienne	ASTM G21 (backing)	Aucun étirement
Réaction au feu	CAN/ULC S102.2	FSC 135/SDV 348
Technologie sans phtalate	N/A	Oui
Usine ISO	N/A	Usine ISO 9001, 14001 et OSHAS 18001
Garantie	N/A	25 ans pour la couche d'usure et toute défaut du produit

Note: Les informations techniques peuvent être modifiées sans préavis. Les données sont à titre informatif uniquement. Pour plus de détails, veuillez nous contacter.

Garantie

25 ans pour la couche d'usure et tout défaut du produit, ainsi que 25 ans de protection pour la tolérance à l'humidité. Se reporter au document de garantie type pour la garantie complète.

Faits environnementaux et normes LEED

Pour plus de détails sur les faits environnementaux et les normes LEED, consultez :
https://www.tarkettsportsindoor.com/wp-content/uploads/2020/02/Booklets-OMNISPORTS-LEED-TS-Indoor-FEB2020.pdf

Instructions d'entretien

Pour le guide d'entretien complet, consultez :
https://www.tarkettsportsindoor.com/wp-content/uploads/2021/03/Omnisports-Care-and-Maintenance-DEC2020.pdf

Méthodes de pose

- GreenLay™ : la méthode de pose GreenLay™ avec adhésif périmétrique permet de ne coller que 2 % de la surface avec la colle Multi-Poxy sans solvant de Tarkett (tolérance à l'humidité : humidité relative de 92 % conformément à la norme ASTM F2170).
- Entièrement collée : pose avec colle Multi-Poxy, HS Sport Spray ou acrylique Multi-Set de Tarkett sur toute la surface (tolérance à l'humidité : 98 % de HR avec la colle Multi-Poxy, 90 % de HR avec la colle HS Sport Spray, 83 % avec la colle acrylique Multi-Set conformément à la norme ASTM F2170).
- Tarkolay : installation avec membrane étanche et colle acrylique Multi-Poxy (aucun essai d'humidité requis).

Tarkett SPORTS INDOOR

Couleurs disponibles

Pure Maple

Pure Oak*

Sapphire

Topaz

Turquoise

Graphite

Garnet

Amber

Coral

Citrine

Jade

Emerald

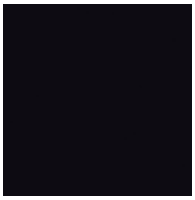
Onyx

*Ce modèle comprend des planches de 3 po de largeur. Les autres modèles de bois ont une largeur de 2 1/4 po.

Couleurs présentées à des fins de représentation seulement. L'utilisation d'un véritable échantillon est recommandée pour évaluer la couleur réelle et effectuer l'agencement.

888.364.6541
tarkettsportsindoor.com

Tarkett SPORTS INDOOR

SECTION 09 65 66
ARCHITECTURAL SPECIFICATIONS FOR INDOOR RESILIENT ATHLETIC SURFACING

PART 1 – GENERAL

1.1 *SECTION INCLUDES*

A. Supply and installation of the indoor resilient multipurpose surfacing
B. Application of the game lines
C. References for the correct construction and preparation of concrete slabs to receive resilient flooring.

1.2 *SUBMITTALS*

A. Product Data:
Manufacturer's promotional brochures, specifications and installation instructions
B. Samples:
1. Submit for selection and approval three (3) sets of the indoor resilient multipurpose surfacing, manufacturer's brochures, samples or sample boards of all of the available colors, textures and styles.
2. Submit color samples of all the available game line paint colors for selection and approval.
C. Closeout Submittals:
1. Submit three (3) copies of the indoor resilient multipurpose surfacing and manufacturer's maintenance instructions.
2. Submit three (3) copies of the material and installation warranties as specified.

1.3 *QUALITY ASSURANCE*

A. Qualifications:
1. The indoor resilient multipurpose surfacing shall have been actively marketed for a minimum of five (5) years.
2. The indoor resilient multipurpose surfacing shall be manufactured in an ISO 9001 certified plant.
3. The indoor resilient multipurpose surfacing supplier shall be an established firm experienced in the field and appointed as a distributor by the manufacturer of the indoor resilient multipurpose surfacing.
4. The installer of the indoor resilient multipurpose surfacing shall have a minimum of five (5) years experience in the field installing indoor resilient multipurpose surfacing and have worked on at least five (5) projects of similar size, type and complexity.
B. Certifications:
1. Installer to submit the indoor resilient athletic surfacing manufacturer's or distributor's certification attesting that they are an approved installer of the indoor resilient multipurpose surfacing.
C. Testing:
Tests shall be relative for multi-purpose use with certificates from independent testing resources to be made available upon request. Test results shall be no more than 5 years old and performed according to ASTM and/or EN standard testing procedures.

1.4 *DELIVERY, STORAGE AND HANDLING*

A. Delivery:
Material shall not be delivered until all related work is in place and finished and/or proper storage facilities and conditions can be provided and guaranteed stable according to FieldTurf USA, Inc. recommendations.

B. Storage:
Store the material in a secure, clean and dry location. Maintain temperature between 55° and 85° Fahrenheit. Store the indoor resilient athletic surfacing on a clean flat surface. Do not stack rolls.

1.5 *PROJECT/SITE CONDITIONS*

A. It is the responsibility of the general contractor/construction manager to maintain project/site conditions acceptable for the installation of the indoor resilient multipurpose flooring.

B. The area in which the indoor resilient multipurpose surfacing will be installed shall be dry and weather tight. Permanent heat, light and ventilation shall be installed and operable.

C. All other trades shall have completed their work prior to the installation of the resilient athletic flooring. The general contractor or Construction Manager shall maintain a secure and clean working environment before, during and after the installation. Suspension of other trades' work may be authorized providing their work will not damage the new flooring.

D. Maintain a stable room temperature of at least 65°F for a minimum of one (1) week prior to, during and thereafter installation.

E. An effective low-permeance vapor barrier is placed directly beneath the concrete subfloor. For "on" or "below grade" installations, it is recommended to provide a permanent vapor barrier resistant to long term hydrostatic pressure/moisture exposure. Protrusions should be sealed to prevent moisture migration into the slab. Moisture should not be allowed to enter the slab after the completed construction.

F. Concrete subfloor surface pH level within the 7 to 9 range dependent upon installation type.

G. Concrete subfloor should be no greater than 1/8" within a 10 ft diameter. This tolerance can be measured in accordance with ASTM E1155.
A specified (F_F) of 50 and an (F_L) of 30 should reach this degree of floor flatness and floor level. There is no numerical correlation between F numbers and the deviation from the straight edge, however the above specified numbers should achieve a flat floor with minimal deviation in the slab. Reference ACI 117 and ACI 302.1R. The general contractor should provide a certificate of compliance with the above recommendations.

H. Concrete subfloor must be clean and free of all foreign materials or objects including, but not limited to, curing compounds and sealers.

I. Fill cracks, grooves, voids, depressions, and other minor imperfections with Ardex (or equal) cement-based patching/leveling compounds. Follow the manufacturer's directions. Moveable joints must be treated utilizing specific transitioning joint devices depending upon the architect's recommendations.

Follow current ASTM F710 guidelines for the preparation of concrete slabs to receive resilient flooring.

J. Refer to ACI 302.2R "Guidelines for Concrete Slabs that Receive Moisture-Sensitive Flooring Materials" for concrete design and construction.

K. Concrete slab shall be fortified with continual steel reinforcement. Fiber reinforcement alone shall not be considered adequate fortification.

1.6 *WARRANTY*

A. Materials:
The indoor resilient athletic surfacing shall be covered by the manufacturer against product defects for 5 years.

B. Installation:
The installation of the indoor resilient multipurpose surfacing shall be covered against poor workmanship and faulty installation by a two (2) year written, limited warranty provided by the contractor performing/overseeing the installation.

1.7 *ADDITIONAL MATERIALS*

Furnish to the owner additional materials containing a total of at least 1% of each different color or design of the indoor resilient athletic surfacing used on the project.

1.8 *LEED™ CERTIFICATION*

The indoor resilient athletic surfacing should be able to help this facility to achieve points towards *LEED™ certification.*

LEED categories positively affected by the indoor resilient athletic surfacing:

Product Type			Rubber
Building Reuse Maintain Interior Nonstructural Elements	MR 1.2	Renovation	1
Construction Waste Management	MR 2	Renovation	2
Construction Waste Management Materials Reuse	MR 3 5 % - 1 point 10% - 2 points	Renovation	2
Recycled Content	MR 4 20% - 2 points	New/Renovation	2
Regional Materials	MR5	New/Renovation	2
Indoor Environmental Air Quality Low VOC Adhesives/Sealants	IEQ 4.1	New/Renovation	1
Low-emitting Materials Paints and Coatings	IEQ 4.2	New/Renovation	1

PART 2 - PRODUCTS

2.1 *MANUFACTURERS*

The basis of the design for the indoor resilient multipurpose surfacing is Dropzone: Droptile as provided by FieldTurf USA, Inc. All other installation accessories and related components must be either made or approved by the indoor resilient athletic surfacing manufacturer. Other products may be approved as equal if deemed qualified and submitted in accordance with the General Conditions. Test reports confirming compliance from an Independent Sports Laboratory must be provided along with samples, technical data, installation, maintenance, and warranty prior to acceptance as an alternative product.

2.2 *MATERIALS.*

Dropzone: Droptile 1" thick configuration consists of a high density, wear surface; cylindrical support feet that allow underside cable routing, maximum resiliency, and water drainage, as well as twelve molded perimeter dowel holes that accept specially designed barbed dowel pins to promote ease of installation.

1. Physical properties of the indoor resilient athletic surfacing shall conform to the following minimums:

Tile Dimension	…….	24" x 24"
Total Thickness	…….	2.5"
Weight	…….	4.0 lbs/sq.ft.
Tensile Strength	ASTM D412	200 minimum
Static Load	ASTM F970	400 p.s.i (modified test)
Coefficient of Friction	ASTM 2047	>.9
Chemical Resistance	ASTM F925	Excellent
Ambient Noise Reduction	ASTM C423	.10
Impact Sound Insulation	ASTM E492	.45 minimum
Thermal Conductivity	ASTM C518	Approximate .406
Sound Transmission	ASTM E413	51

1. Color: As available from the indoor resilient athletic surfacing manufacturer's standard range.

PART 3 - EXECUTION

3.1 *EXAMINATION*

A. It is the responsibility of the general contractor/construction manager to ensure that project/site conditions are acceptable for the installation of the indoor resilient athletic flooring.
B. Verify that the area in which the indoor resilient athletic surfacing will be installed is dry and weather tight. Verify that permanent heat, light and ventilation is installed and operable.
C. Verify that all other work that could cause damage, dirt and dust or interrupt the normal pace of the indoor resilient athletic flooring installation is completed or suspended.
D. Verify that there is a stable room temperature of at least 65°F.

E. Verify that there are no foreign materials or objects on the subfloor and that the subfloor is clean and ready for installation.
F. Document the results indicating the slab is within manufacturer's tolerances for slab deviation.

3.2 *PREPARATION OF SURFACES*

A. Sand the entire surface of the concrete slab.
B. Sweep the concrete slab so as to remove all dirt and dust. If a sweeping compound is to be used it must be a sweeping compound that does not contain oil or other items that may inhibit the adhesive bond.
C. Slab must be dust free. In the event that dust impairs adhesive bond, priming the slab prior to application of adhesive may be necessary. Follow installation guidelines.

3.3 *INSTALLATION*

A. The installation area shall be closed to all traffic and activity for a period to be set by the indoor resilient athletic surfacing installer. The indoor resilient athletic surfacing installation shall not begin until the installer is familiar with the existing conditions.
B. All necessary precautions should be taken to minimize noise, smell, dust, the use of hazardous materials and any other items that may inconvenience others.
C. Install the indoor resilient athletic surfacing in strict accordance with the indoor resilient athletic surfacing manufacturer's written instructions.
D. Install the indoor resilient athletic surfacing minimizing cross seams. Provide a seam diagram during the submittal process for approval prior to installation.
E. Install appropriate threshold plates or transition strips where necessary.

3.5 *CLEANING*

A. Remove all unused materials, tools, and equipment and dispose of any debris properly. Clean the indoor resilient athletic surfacing in accordance with the manufacturer's instructions.

3.6 *PROTECTION*

If required, protect the indoor resilient athletic surfacing from damage using coverings approved by the manufacturer until acceptance of work by the customer or their authorized representative.

3.6 RELATED STANDARDS AND GUIDELINES

A. ASTM F710 "Standard Practice for Preparing Concrete Floors to Receive Resilient Flooring"
B. ACI 302.2R-06 "Guideline for Concrete Slabs that Receive Moisture-Sensitive Flooring Materials"

END OF SECTION

SECTION 09 65 66
ARCHITECTURAL SPECIFICATIONS FOR INDOOR RESILIENT ATHLETIC SURFACING

PART 1 – GENERAL

1.1 *SECTION INCLUDES*

A. Supply and installation of the indoor resilient multipurpose surfacing
B. Application of the game lines
C. References for the correct construction and preparation of concrete slabs to receive resilient flooring.

1.2 *SUBMITTALS*

A. Product Data:
Manufacturer's promotional brochures, specifications and installation instructions
B. Samples:
1. Submit for selection and approval three (3) sets of the indoor resilient multipurpose surfacing, manufacturer's brochures, samples or sample boards of all of the available colors, textures and styles.
2. Submit color samples of all the available game line paint colors for selection and approval.
C. Closeout Submittals:
1. Submit three (3) copies of the indoor resilient multipurpose surfacing and manufacturer's maintenance instructions.
2. Submit three (3) copies of the material and installation warranties as specified.

1.3 *QUALITY ASSURANCE*

A. Qualifications:
1. The indoor resilient multipurpose surfacing shall have been actively marketed for a minimum of five (5) years.
2. The indoor resilient multipurpose surfacing shall be manufactured in an ISO 9001 certified plant.
3. The indoor resilient multipurpose surfacing supplier shall be an established firm experienced in the field and appointed as a distributor by the manufacturer of the indoor resilient multipurpose surfacing.
4. The installer of the indoor resilient multipurpose surfacing shall have a minimum of five (5) years experience in the field installing indoor resilient multipurpose surfacing and have worked on at least five (5) projects of similar size, type and complexity.
B. Certifications:
1. Installer to submit the indoor resilient athletic surfacing manufacturer's or distributor's certification attesting that they are an approved installer of the indoor resilient multipurpose surfacing.
C. Testing:
Tests shall be relative for multi-purpose use with certificates from independent testing resources to be made available upon request. Test results shall be no more than 5 years old and performed according to ASTM and/or EN standard testing procedures.

1.4 *DELIVERY, STORAGE AND HANDLING*

A. Delivery:
Material shall not be delivered until all related work is in place and finished and/or proper storage facilities and conditions can be provided and guaranteed stable according to FieldTurf USA, Inc. recommendations.

B. Storage:
Store the material in a secure, clean and dry location. Maintain temperature between 55° and 85° Fahrenheit. Store the indoor resilient athletic surfacing on a clean flat surface. Do not stack rolls.

1.5 *PROJECT/SITE CONDITIONS*

A. It is the responsibility of the general contractor/construction manager to maintain project/site conditions acceptable for the installation of the indoor resilient multipurpose flooring.

B. The area in which the indoor resilient multipurpose surfacing will be installed shall be dry and weather tight. Permanent heat, light and ventilation shall be installed and operable.

C. All other trades shall have completed their work prior to the installation of the resilient athletic flooring. The general contractor or Construction Manager shall maintain a secure and clean working environment before, during and after the installation. Suspension of other trades' work may be authorized providing their work will not damage the new flooring.

D. Maintain a stable room temperature of at least 65°F for a minimum of one (1) week prior to, during and thereafter installation.

E. An effective low-permeance vapor barrier is placed directly beneath the concrete subfloor. For "on" or "below grade" installations, it is recommended to provide a permanent vapor barrier resistant to long term hydrostatic pressure/moisture exposure. Protrusions should be sealed to prevent moisture migration into the slab. Moisture should not be allowed to enter the slab after the completed construction.

F. Concrete subfloor surface pH level within the 7 to 9 range dependent upon installation type.

G. Concrete subfloor should be no greater than 1/8" within a 10 ft diameter. This tolerance can be measured in accordance with ASTM E1155.
A specified (F_F) of 50 and an (F_L) of 30 should reach this degree of floor flatness and floor level. There is no numerical correlation between F numbers and the deviation from the straight edge, however the above specified numbers should achieve a flat floor with minimal deviation in the slab. Reference ACI 117 and ACI 302.1R. The general contractor should provide a certificate of compliance with the above recommendations.

H. Concrete subfloor must be clean and free of all foreign materials or objects including, but not limited to, curing compounds and sealers.

I. Fill cracks, grooves, voids, depressions, and other minor imperfections with Ardex (or equal) cement-based patching/leveling compounds. Follow the manufacturer's directions. Moveable joints must be treated utilizing specific transitioning joint devices depending upon the architect's recommendations.

Follow current ASTM F710 guidelines for the preparation of concrete slabs to receive resilient flooring.

J. Refer to ACI 302.2R "Guidelines for Concrete Slabs that Receive Moisture-Sensitive Flooring Materials" for concrete design and construction.

K. Concrete slab shall be fortified with continual steel reinforcement. Fiber reinforcement alone shall not be considered adequate fortification.

1.6 *WARRANTY*

A. Materials:
The indoor resilient athletic surfacing shall be covered by the manufacturer against product defects for 15 years.

B. Installation:
The installation of the indoor resilient multipurpose surfacing shall be covered against poor workmanship and faulty installation by a two (2) year written, limited warranty provided by the contractor performing/overseeing the installation.

1.7 *ADDITIONAL MATERIALS*

Furnish to the owner additional materials containing a total of at least 1% of each different color or design of the indoor resilient athletic surfacing used on the project.

1.8 *LEED™ CERTIFICATION*

The indoor resilient athletic surfacing should be able to help this facility to achieve points towards *LEED™ certification.*

LEED categories positively affected by the indoor resilient athletic surfacing:

Product Type			Rubber
Building Reuse Maintain Interior Nonstructural Elements	MR 1.2	Renovation	1
Construction Waste Management	MR 2	Renovation	2
Construction Waste Management Materials Reuse	MR 3 5 % - 1 point 10% - 2 points	Renovation	2
Recycled Content	MR 4 20% - 2 points	New/Renovation	2
Regional Materials	MR5	New/Renovation	2
Indoor Environmental Air Quality Low VOC Adhesives/Sealants	IEQ 4.1	New/Renovation	1
Low-emitting Materials Paints and Coatings	IEQ 4.2	New/Renovation	1

PART 2 - PRODUCTS

2.1 *MANUFACTURERS*

The basis of the design for the indoor resilient multipurpose surfacing is Dropzone: Droptile as provided by FieldTurf USA, Inc. All other installation accessories and related components must be either made or approved by the indoor resilient athletic surfacing manufacturer. Other products may be approved as equal if deemed qualified and submitted in accordance with the General Conditions. Test reports confirming compliance from an Independent Sports Laboratory must be provided along with samples, technical data, installation, maintenance, and warranty prior to acceptance as an alternative product.

2.2 *MATERIALS.*

Dropzone: Droptile 1" thick configuration consists of a high density, wear surface; cylindrical support feet that allow underside cable routing, maximum resiliency, and water drainage, as well as twelve molded perimeter dowel holes that accept specially designed barbed dowel pins to promote ease of installation.

1. Physical properties of the indoor resilient athletic surfacing shall conform to the following minimums:

Tile Dimension	…….	24" x 24"
Total Thickness	…….	1"
Weight	…….	4.0 lbs/sq.ft.
Tensile Strength	ASTM D412	200 minimum
Static Load	ASTM F970	400 p.s.i (modified test)
Coefficient of Friction	ASTM 2047	>.9
Chemical Resistance	ASTM F925	Excellent
Ambient Noise Reduction	ASTM C423	.10
Impact Sound Insulation	ASTM E492	.45 minimum
Thermal Conductivity	ASTM C518	Approximate .406
Sound Transmission	ASTM E413	51

1. Color: As available from the indoor resilient athletic surfacing manufacturer's standard range.

PART 3 - EXECUTION

3.1 *EXAMINATION*

A. It is the responsibility of the general contractor/construction manager to ensure that project/site conditions are acceptable for the installation of the indoor resilient athletic flooring.
B. Verify that the area in which the indoor resilient athletic surfacing will be installed is dry and weather tight. Verify that permanent heat, light and ventilation is installed and operable.
C. Verify that all other work that could cause damage, dirt and dust or interrupt the normal pace of the indoor resilient athletic flooring installation is completed or suspended.
D. Verify that there is a stable room temperature of at least 65°F.

E. Verify that there are no foreign materials or objects on the subfloor and that the subfloor is clean and ready for installation.
F. Document the results indicating the slab is within manufacturer's tolerances for slab deviation.

3.2 *PREPARATION OF SURFACES*

A. Sand the entire surface of the concrete slab.
B. Sweep the concrete slab so as to remove all dirt and dust. If a sweeping compound is to be used it must be a sweeping compound that does not contain oil or other items that may inhibit the adhesive bond.
C. Slab must be dust free. In the event that dust impairs adhesive bond, priming the slab prior to application of adhesive may be necessary. Follow installation guidelines.

3.3 *INSTALLATION*

A. The installation area shall be closed to all traffic and activity for a period to be set by the indoor resilient athletic surfacing installer. The indoor resilient athletic surfacing installation shall not begin until the installer is familiar with the existing conditions.
B. All necessary precautions should be taken to minimize noise, smell, dust, the use of hazardous materials and any other items that may inconvenience others.
C. Install the indoor resilient athletic surfacing in strict accordance with the indoor resilient athletic surfacing manufacturer's written instructions.
D. Install the indoor resilient athletic surfacing minimizing cross seams. Provide a seam diagram during the submittal process for approval prior to installation.
E. Install appropriate threshold plates or transition strips where necessary.

3.5 *CLEANING*

A. Remove all unused materials, tools, and equipment and dispose of any debris properly. Clean the indoor resilient athletic surfacing in accordance with the manufacturer's instructions.

3.6 *PROTECTION*

If required, protect the indoor resilient athletic surfacing from damage using coverings approved by the manufacturer until acceptance of work by the customer or their authorized representative.

3.6 RELATED STANDARDS AND GUIDELINES

A. ASTM F710 "Standard Practice for Preparing Concrete Floors to Receive Resilient Flooring"
B. ACI 302.2R-06 "Guideline for Concrete Slabs that Receive Moisture-Sensitive Flooring Materials"

END OF SECTION

SECTION 09 65 66
ARCHITECTURAL SPECIFICATIONS FOR INDOOR RESILIENT ATHLETIC SURFACING

PART 1 – GENERAL

1.1 *SECTION INCLUDES*

A. Supply and installation of the indoor multipurpose surfacing
B. References for the correct construction and preparation of concrete slabs to receive resilient flooring.

1.2 *SUBMITTALS*

A. Product Data:
   1. Manufacturer's promotional brochures, specifications and installation instructions
B. Manufacturer Certifications:
   1. Provide certification that accurately identifies the Original Equipment Manufacturer (OEM) of flooring furnished for this project including manufacturer's name, address and factory location.
   2. Suppliers of private label flooring for this project must identify themselves as such and fully disclose the OEM information listed above.
   3. All "manufacturer" requirements in these specifications must be complied with by the OEM, including warranties, certifications, qualifications, product data, test results, environmental requirements, performance data, etc.
C. Samples:
   1. Submit for selection and approval three (3) sets of the indoor resilient multipurpose surfacing, manufacturer's brochures, samples or sample boards of all of the available colors, textures and styles.
   2. Submit color samples of all the available game line paint colors for selection and approval.
D. Closeout Submittals:
   1. Submit three (3) copies of the indoor resilient multipurpose surfacing and manufacturer's maintenance instructions.
   2. Submit three (3) copies of the material and installation warranties as specified.

1.3 *QUALITY ASSURANCE*

A. Qualifications:
   1. The indoor multipurpose surfacing supplier shall be an established firm, experienced in the field, and competent in the techniques required by the manufacturer.
   2. The installer of the indoor resilient multipurpose surfacing shall have a minimum of five (5) years of experience in the field installing indoor resilient multipurpose surfacing and have worked on at least five (5) projects of similar size, type and complexity.

B. Certifications:
   1. Installer to submit the manufacturer's certification attesting that they are a trained installer of the indoor resilient multipurpose surfacing.

C. Testing:
   1. Tests shall be relative for multi-purpose use with certificates from independent testing resources to be made available upon request.
   2. Test results shall be no more than 5 years old and performed according to ASTM standard testing procedures.

1.4 *DELIVERY, STORAGE AND HANDLING*

A. Delivery:
   Material shall not be delivered until all related work is in place and finished and/or proper storage facilities and conditions can be provided and guaranteed stable according to FieldTurf USA, Inc. recommendations.

B. Storage:
   1. Store the material in a secure, clean and dry location.
   2. Maintain temperature between 55° and 85° Fahrenheit.

1.5 *PROJECT/SITE CONDITIONS*

A. It is the responsibility of the general contractor/construction manager to maintain project/site conditions acceptable for the installation of the indoor multipurpose flooring.

B. The area in which the surfacing will be installed shall be dry and weather tight. Permanent heat, light and ventilation shall be installed and operable.

C. All other trades shall have completed their work prior to the installation of the resilient athletic flooring. The general contractor or construction manager shall maintain a secure and clean working environment before, during and after the installation.

D. Maintain a stable room temperature of at least 65°F for a minimum of one (1) week prior to, during and thereafter installation.

E. An effective low-permeance vapor barrier is placed directly beneath the concrete subfloor. For "on" or "below grade" installations, it is recommended to provide a permanent vapor barrier resistant to long term hydrostatic pressure/moisture exposure. Protrusions should be sealed to prevent moisture migration into the slab. Moisture should not be allowed to enter the slab after the completed construction.

F. Concrete subfloor surface pH level within the 7 to 10 range dependent upon installation type.

G. Concrete subfloor should be no greater than 1/8" within a 10 ft diameter. This tolerance can be measured in accordance with ASTM E1155. A specified (F_F) of 50 and an (F_L) of 30 should reach this degree of floor flatness and floor level. There is no numerical correlation between F numbers and the deviation from the straight edge. However, the above specified numbers should achieve a flat floor with minimal deviation in the slab. Reference ACI 117 and ACI 302.1R. The general contractor should provide a certificate of compliance with the above recommendations.

H. Concrete subfloor must be clean and free of all foreign materials or objects including, but not limited to, curing compounds and sealers.

I. Fill cracks, grooves, voids, depressions, and other minor imperfections. Follow the manufacturer's directions. Moveable joints must be treated utilizing specific transitioning joint devices depending upon the architect's recommendations. Follow

current ASTM F710 guidelines for the preparation of concrete slabs to receive resilient flooring.

J. Refer to ACI 302.2R "Guidelines for Concrete Slabs that Receive Moisture-Sensitive Flooring Materials" for concrete design and construction.
K. Concrete slab shall be fortified with continual steel reinforcement. Fiber reinforcement alone shall not be considered adequate fortification.

1.6 *WARRANTY*

A. Prorated Warranty: Product defects are warranted for 5 years.

1.7 *ADDITIONAL MATERIALS*

A. Furnish to the owner additional materials containing a total of at least 1% of each different color or design of the indoor surfacing used on the project.

PART 2 - PRODUCTS

2.1 *MANUFACTURERS*

A. The basis of the design for the indoor resilient multipurpose surfacing is Dropturf provided by Tarkett Sports.
B. All other installation accessories and related components must be either made or approved by the manufacturer.
C. Other products may be approved as equal if deemed qualified and submitted in accordance with the General Conditions.

2.2 *MATERIALS*

A. Dropturf and provided by Tarkett Sports. Dropturf is a synthetic cushioned non-fill turf system that is fully adhered.
B. Physical properties of the surfacing shall conform to the following minimums:

Property	Value	Units	Description
Pile Yarn Type	UV-resistant polyethylene		n/a
Yarn Structure	Slit-Film/Thatch		n/a
Yarn Denier	10000/5000	Denier	D1577
Pile Height	0.75	inches	D5823
Pile Weight	40	oz/yd^2	D5848
Primary Backing Weight	8+	oz/yd^2	D5848
Secondary Backing Weight (Perforated)	20+	oz/yd^2	D5848
5mm Attached Foam Pad	61	oz/yd^2	
Total Carpet & Pad Weight	129	oz/yd^2	D5848
Stitch Gauge	3/16 inch centers		D5793
Tuft Bind	8+	lbs/force	D1335
Pill Burn Test	Pass		D2859

Attached Pad	5	mm	

1. Color: As available from the manufacturer's standard range.
2. Texture: Texture to remain consistent when blending colors.

C. Adhesive: As approved by the manufacturer.

PART 3 - EXECUTION

3.1 *EXAMINATION*

A. It is the responsibility of the general contractor/construction manager to ensure that project/site conditions are acceptable for the installation.
B. Verify that the area in which the surfacing will be installed is dry and weather tight. Verify that permanent heat, light and ventilation are installed and operable.
C. Verify that all other work that could cause damage, dirt and dust or interrupt the normal pace of the indoor resilient athletic flooring installation is completed or suspended.
D. Verify that there is a stable room temperature of at least 65◦F.
E. Verify that there are no foreign materials or objects on the subfloor and that the subfloor is clean and ready for installation.
F. *Adhesive moisture tolerances are dependent upon the adhesive type used.*
G. Follow Fieldturf USA, Inc. installation recommendations.
H. Do not average the results of the tests. Report all field test results in writing to the General Contractor, Architect, and End User prior to installation.
I. Verify that the concrete subfloor surface pH level is within the 7 - 10 range.
J. Document the results confirming the slab is within manufacturer's tolerances for slab deviation.

3.2 *PREPARATION OF SURFACES*

A. Sand the entire surface of the concrete slab.
B. Sweep the concrete slab so as to remove all dirt and dust. If a sweeping compound is to be used it must be a sweeping compound that does not contain oil or other items that may inhibit the adhesive bond.
C. Slab must be dust free. In the event that dust impairs adhesive bond, priming the slab prior to application of adhesive may be necessary. Follow installation guidelines.
D. Follow OSHA guidelines.

3.3 *INSTALLATION*

A. The installation area shall be closed to all traffic and activity for a period to be set by the indoor resilient athletic surfacing installer. The surfacing installation shall not begin until the installer is familiar with the existing conditions.
B. All necessary precautions should be taken to minimize noise, smell, dust, the use of hazardous materials and any other items that may inconvenience others.
C. Install the surfacing in strict accordance with the manufacturer's written instructions.
D. Install the surfacing minimizing cross seams. Provide a seam diagram during the submittal process for approval prior to installation.
E. Install appropriate threshold plates or transition strips where necessary.

2.0 *CLEANING*

A. Remove all unused materials, tools, and equipment and dispose of any debris properly.

3.6 *PROTECTION*

A. If required, protect the surfacing from damage using coverings approved by the manufacturer until acceptance of work by the customer or their authorized representative.

3.7 *RELATED STANDARDS AND GUIDELINES*

A. ASTM F2170 "Standard Test Method for Determining Relative Humidity In Concrete Floor Slabs Using In-Situ Probes"
B. ASTM F710 "Standard Practice for Preparing Concrete Floors to Receive Resilient Flooring"
C. ACI 302.2R-06 "Guideline for Concrete Slabs that Receive Moisture-Sensitive Flooring Materials"
D. ASTM F2772-11 "Standard Specification for Athletic Performance Properties of Indoor Sports Floor Systems"

END OF SECTION

SECTION 09 65 66
ARCHITECTURAL SPECIFICATIONS FOR INDOOR RESILIENT ATHLETIC SURFACING

PART 1 – GENERAL

1.1 *SECTION INCLUDES*

A. Supply and installation of the indoor resilient multipurpose surfacing
B. Application of the game lines
C. References for the correct construction and preparation of concrete slabs to receive resilient flooring.

1.2 *SUBMITTALS*

A. Product Data:

Manufacturer's promotional brochures, specifications and installation instructions

B. Samples:

1. Submit for selection and approval three (3) sets of the indoor resilient multipurpose surfacing, manufacturer's brochures, samples or sample boards of all of the available colors, textures and styles.
2. Submit color samples of all the available game line paint colors for selection and approval.

C. Closeout Submittals:

1. Submit three (3) copies of the indoor resilient multipurpose surfacing and manufacturer's maintenance instructions.
2. Submit three (3) copies of the material and installation warranties as specified.

1.3 *QUALITY ASSURANCE*

A. Qualifications:

1. The indoor resilient multipurpose surfacing shall have been actively marketed for a minimum of five (5) years.
2. The indoor resilient multipurpose surfacing shall be manufactured in an ISO 9001 certified plant.
3. The indoor resilient multipurpose surfacing supplier shall be an established firm experienced in the field and appointed as a distributor by the manufacturer of the indoor resilient multipurpose surfacing.
4. The installer of the indoor resilient multipurpose surfacing shall have a minimum of five (5) years experience in the field installing

indoor resilient multipurpose surfacing and have worked on at least five (5) projects of similar size, type and complexity.

B. Certifications:

Installer to submit the indoor resilient athletic surfacing manufacturer's or distributor's certification attesting that they are an approved installer of the indoor resilient multipurpose surfacing.

C. Testing:

Tests shall be relative for multi-purpose use with certificates from independent testing resources to be made available upon request. Test results shall be no more than 5 years old and performed according to ASTM and/or EN standard testing procedures.

1.4 *DELIVERY, STORAGE AND HANDLING*

A. Delivery:

Material shall not be delivered until all related work is in place and finished and/or proper storage facilities and conditions can be provided and guaranteed stable according to Tarkett Sports' recommendations.

B. Storage:

Store the material in a secure, clean and dry location. Maintain temperature between 65° and 85° Fahrenheit. Store the indoor resilient athletic surfacing on a clean flat surface.

1.5 *PROJECT/SITE CONDITIONS*

A. It is the responsibility of the general contractor/construction manager to maintain project/site conditions acceptable for the installation of the indoor resilient multipurpose flooring.
B. The area in which the indoor resilient multipurpose surfacing will be installed shall be dry and weather tight. Permanent heat, light and ventilation shall be installed and operable.
C. All other trades shall have completed their work prior to the installation of the resilient athletic flooring. The general contractor or Construction Manager shall maintain a secure and clean working environment before, during and after the installation. Suspension of other trades' work may be authorized providing their work will not damage the new flooring.

D. Maintain a stable room temperature of at least 65°F for a minimum of one (1) week prior to, during and thereafter installation.
E. An effective low-permeance vapor barrier is placed directly beneath the concrete subfloor. For "on" or "below grade" installations, it is recommended to provide a permanent vapor barrier resistant to long term hydrostatic pressure/moisture exposure. Protrusions should be sealed to prevent moisture migration into the slab. Moisture should not be allowed to enter the slab after the completed construction.
F. Concrete subfloor surface pH level within the 7 to 9 range dependent upon installation type.
G. Concrete subfloor should be no greater than 1/8" within a 10 ft diameter. This tolerance can be measured in accordance with ASTM E1155.
   A specified (F_F) of 50 and an (F_L) of 30 should reach this degree of floor flatness and floor level. There is no numerical correlation between F numbers and the deviation from the straight edge, however the above specified numbers should achieve a flat floor with minimal deviation in the slab. Reference ACI 117 and ACI 302.1R. The general contractor should provide a certificate of compliance with the above recommendations.
H. Concrete subfloor must be clean and free of all foreign materials or objects including, but not limited to, curing compounds and sealers.
I. Fill cracks, grooves, voids, depressions, and other minor imperfections with Ardex (or equal) cement-based patching/leveling compounds. Follow the manufacturer's directions. Moveable joints must be treated utilizing specific transitioning joint devices depending upon the architect's recommendations. Follow current ASTM F710 guidelines for the preparation of concrete slabs to receive resilient flooring.
J. Refer to ACI 302.2R "Guidelines for Concrete Slabs that Receive Moisture-Sensitive Flooring Materials" for concrete design and construction.
K. Concrete slab shall be fortified with continual steel reinforcement. Fiber reinforcement alone shall not be considered adequate fortification.

1.6 *WARRANTY*

A. Materials:

   The indoor resilient athletic surfacing shall be covered by the manufacturer against product defects for 3 years.

B. Installation:

   The installation of the indoor resilient multipurpose surfacing shall be covered against poor workmanship and faulty installation by a two (2)

year written, limited warranty provided by the contractor performing/overseeing the installation.

1.7 *ADDITIONAL MATERIALS*

Furnish to the owner additional materials containing a total of at least 1% of each different color or design of the indoor resilient athletic surfacing used on the project.

1.8 *LEED™ CERTIFICATION*

The indoor resilient athletic surfacing should be able to help this facility to achieve points towards *LEED™ certification.*

LEED categories positively affected by the indoor resilient athletic surfacing:

Product Type			Rubber
Total Potential Credits			12
Building Reuse Maintain Interior Nonstructural Elements	**MR 1.2**	Renovation	1
Construction Waste Management	**MR 2**	Renovation	2
Construction Waste Management Materials Reuse	**MR 3** **5 % - 1 point** **10% - 2 points**	Renovation	2
Recycled Content	**MR 4** **20% - 2 points**	New/Renovation	2
Regional Materials	**MR5**	New/Renovation	2
Indoor Environmental Air Quality Low VOC Adhesives/Sealants	**IEQ 4.1**	New/Renovation	1
Low-emitting Materials Paints and Coatings	**IEQ 4.2**	New/Renovation	1
Low-Emitting Materials Composite Wood and Agrifiber Products	**IEQ 4.4** **Plywood Substructures** **Wood and Combi-Systems**	New/Renovation	1

PART 2 - PRODUCTS

2.1 *MANUFACTURERS*

The basis of the design for the indoor resilient multipurpose surfacing is **Dropzone Comfort 10.5 mm** as provided by Tarkett Sports. All other installation accessories and related components must be either made or approved by the indoor resilient athletic surfacing manufacturer. Other products may be approved as equal if deemed qualified and submitted in accordance with the General Conditions.

2.2 *MATERIALS*

Dropzone Comfort

1. Physical properties of the indoor resilient athletic surfacing shall conform to the following minimums:

Width	—	4 ft.
Total Thickness	—	10.5 mm
Wear Layer Thickness	—	2.5 mm
Weight	—	2.34 lbs./sq.ft.
Coefficient of Friction	ASTM D2047	>.9
Static Load	ASTM F970	.004″
CA Section 01350 Compliance	ASTM D5116	Passed
Noise Reduction	ASTM D3389	<0.1g, 100 cycles
Abrasion Resistance	ASTM E492-04	54
Chemical Resistance	ASTM F925	Good
Force Reduction	ASTM F2772	Class 1
Vertical Deformation	ASTM F2772	.5mm
Thermal Conductivity	ASTM C518	>0.4

1. Color: As available from the indoor resilient athletic surfacing manufacturer's standard range.
2. Adhesive: As approved by the indoor resilient athletic surfacing manufacturer.

PART 3 - EXECUTION

3.1 *EXAMINATION*

A. It is the responsibility of the general contractor/construction manager to ensure that project/site conditions are acceptable for the installation of the indoor resilient athletic flooring.
B. Verify that the area in which the indoor resilient athletic surfacing will be installed is dry and weather tight. Verify that permanent heat, light and ventilation is installed and operable.
C. Verify that all other work that could cause damage, dirt and dust or interrupt the normal pace of the indoor resilient athletic flooring installation is completed or suspended.
D. Verify that there is a stable room temperature of at least 65°F.
E. Verify that there are no foreign materials or objects on the subfloor and that the subfloor is clean and ready for installation.
F. *Direct Full Spread Adhering to Concrete Subfloor with Multi-Poxy*: No higher than 98 % RH when tested per ASTM F2170. ASTM F1869 is not approved.

G. Do not average the results of the tests. Report all field test results in writing to the General Contractor, Architect, and End User prior to installation.
H. Verify that the concrete subfloor surface pH level is within the 7 - 10 range.
I. Document the results indicating the slab is within manufacturer's tolerances for slab deviation.

3.2 *PREPARATION OF SURFACES*

A. Sand the entire surface of the concrete slab.
B. Sweep the concrete slab so as to remove all dirt and dust. If a sweeping compound is to be used it must be a sweeping compound that does not contain oils or other items that may inhibit the adhesive bond. (See ASTM F710).
C. Slab must be dust free. In the event that dust impairs adhesive bond, priming the slab prior to application of adhesive may be necessary. Follow installation guidelines.

3.3 *INSTALLATION*

A. The installation area shall be closed to all traffic and activity for a period to be set by the indoor resilient athletic surfacing installer. The indoor resilient athletic surfacing installation shall not begin until the installer is familiar with the existing conditions.
B. All necessary precautions should be taken to minimize noise, smell, dust, the use of hazardous materials and any other items that may inconvenience others.
C. Install the indoor resilient athletic surfacing in strict accordance with the indoor resilient athletic surfacing manufacturer's written instructions.
D. Install the indoor resilient athletic surfacing minimizing cross seams. Provide a seam diagram during the submittal process for approval prior to installation.
E. Install appropriate threshold plates or transition strips where necessary.

3.4 *CLEANING*

A. Remove all unused materials, tools, and equipment and dispose of any debris properly. Clean the indoor resilient athletic surfacing in accordance with the manufacturer's instructions.

3.5 *PROTECTION*

If required, protect the indoor resilient athletic surfacing from damage using coverings approved by the manufacturer until acceptance of work by the customer or their authorized representative.

3.6 *RELATED STANDARDS AND GUIDELINES*

A. ASTM F1869 "Standard Test Method for Measuring Moisture Evaporation
Rate of Concrete Subfloor Using Anhydrous Calcium Chloride"
B. ASTM F2170 "Standard Test Method for Determining Relative Humidity In Concrete Floor Slabs Using In-Situ Probes"
C. ASTM F710 "Standard Practice for Preparing Concrete Floors to Receive Resilient Flooring"
D. ACI 302.2R-06 "Guideline for Concrete Slabs that Receive Moisture Sensitive Flooring Materials"

END OF SECTION

SECTION 09 65 66
ARCHITECTURAL SPECIFICATIONS FOR INDOOR RESILIENT ATHLETIC SURFACING

PART 1 – GENERAL

1.1 SECTION INCLUDES

A. Supply and installation of the indoor resilient multipurpose surfacing
B. Application of the game lines
C. References for the correct construction and preparation of concrete slabs to receive resilient flooring.

1.2 *SUBMITTALS*

A. Product Data:

Manufacturer's promotional brochures, specifications and installation instructions

B. Samples:

1. Submit for selection and approval three (3) sets of the indoor resilient multipurpose surfacing, manufacturer's brochures, samples or sample boards of all of the available colors, textures and styles.
2. Submit color samples of all the available game line paint colors for selection and approval.

C. Closeout Submittals:

1. Submit three (3) copies of the indoor resilient multipurpose surfacing and manufacturer's maintenance instructions.
2. Submit three (3) copies of the material and installation warranties as specified.

1.3 *QUALITY ASSURANCE*

A. Qualifications:

1. The indoor resilient multipurpose surfacing shall have been actively marketed for a minimum of five (5) years.
2. The indoor resilient multipurpose surfacing shall be manufactured in an ISO 9001 certified plant.
3. The indoor resilient multipurpose surfacing supplier shall be an established firm experienced in the field and appointed as a distributor by the manufacturer of the indoor resilient multipurpose surfacing.
4. The installer of the indoor resilient multipurpose surfacing shall have a minimum of five (5) years experience in the field installing

indoor resilient multipurpose surfacing and have worked on at least five (5) projects of similar size, type and complexity.

B. Certifications:

Installer to submit the indoor resilient athletic surfacing manufacturer's or distributor's certification attesting that they are an approved installer of the indoor resilient multipurpose surfacing.

C. Testing:

Tests shall be relative for multi-purpose use with certificates from independent testing resources to be made available upon request. Test results shall be no more than 5 years old and performed according to ASTM and/or EN standard testing procedures.

1.4 *DELIVERY, STORAGE AND HANDLING*

A. Delivery:

Material shall not be delivered until all related work is in place and finished and/or proper storage facilities and conditions can be provided and guaranteed stable according to Tarkett Sports' recommendations.

B. Storage:

Store the material in a secure, clean and dry location. Maintain temperature between 65° and 85° Fahrenheit. Store the indoor resilient athletic surfacing on a clean flat surface.

1.5 *PROJECT/SITE CONDITIONS*

A. It is the responsibility of the general contractor/construction manager to maintain project/site conditions acceptable for the installation of the indoor resilient multipurpose flooring.
B. The area in which the indoor resilient multipurpose surfacing will be installed shall be dry and weather tight. Permanent heat, light and ventilation shall be installed and operable.
C. All other trades shall have completed their work prior to the installation of the resilient athletic flooring. The general contractor or Construction Manager shall maintain a secure and clean working environment before, during and after the installation. Suspension of other trades' work may be authorized providing their work will not damage the new flooring.

D. Maintain a stable room temperature of at least 65°F for a minimum of one (1) week prior to, during and thereafter installation.
E. An effective low-permeance vapor barrier is placed directly beneath the concrete subfloor. For "on" or "below grade" installations, it is recommended to provide a permanent vapor barrier resistant to long term hydrostatic pressure/moisture exposure. Protrusions should be sealed to prevent moisture migration into the slab. Moisture should not be allowed to enter the slab after the completed construction.
F. Concrete subfloor surface pH level within the 7 to 9 range dependent upon installation type.
G. Concrete subfloor should be no greater than 1/8" within a 10 ft diameter. This tolerance can be measured in accordance with ASTM E1155.
   A specified (F_F) of 50 and an (F_L) of 30 should reach this degree of floor flatness and floor level. There is no numerical correlation between F numbers and the deviation from the straight edge, however the above specified numbers should achieve a flat floor with minimal deviation in the slab. Reference ACI 117 and ACI 302.1R. The general contractor should provide a certificate of compliance with the above recommendations.
H. Concrete subfloor must be clean and free of all foreign materials or objects including, but not limited to, curing compounds and sealers.
I. Fill cracks, grooves, voids, depressions, and other minor imperfections with Ardex (or equal) cement-based patching/leveling compounds. Follow the manufacturer's directions. Moveable joints must be treated utilizing specific transitioning joint devices depending upon the architect's recommendations. Follow current ASTM F710 guidelines for the preparation of concrete slabs to receive resilient flooring.
J. Refer to ACI 302.2R "Guidelines for Concrete Slabs that Receive Moisture-Sensitive Flooring Materials" for concrete design and construction.
K. Concrete slab shall be fortified with continual steel reinforcement. Fiber reinforcement alone shall not be considered adequate fortification.

1.6 *WARRANTY*

A. Materials:

   The indoor resilient athletic surfacing shall be covered by the manufacturer against product defects for 3 years.

B. Installation:

   The installation of the indoor resilient multipurpose surfacing shall be covered against poor workmanship and faulty installation by a two (2)

year written, limited warranty provided by the contractor performing/overseeing the installation.

1.7 *ADDITIONAL MATERIALS*

Furnish to the owner additional materials containing a total of at least 1% of each different color or design of the indoor resilient athletic surfacing used on the project.

1.8 *LEED™ CERTIFICATION*

The indoor resilient athletic surfacing should be able to help this facility to achieve points towards *LEED™ certification.*

LEED categories positively affected by the indoor resilient athletic surfacing:

Product Type			Rubber
Total Potential Credits			12
Building Reuse Maintain Interior Nonstructural Elements	**MR 1.2**	Renovation	1
Construction Waste Management	**MR 2**	Renovation	2
Construction Waste Management Materials Reuse	**MR 3** **5 % - 1 point** **10% - 2 points**	Renovation	2
Recycled Content	**MR 4** **20% - 2 points**	New/Renovation	2
Regional Materials	**MR5**	New/Renovation	2
Indoor Environmental Air Quality Low VOC Adhesives/Sealants	**IEQ 4.1**	New/Renovation	1
Low-emitting Materials Paints and Coatings	**IEQ 4.2**	New/Renovation	1
Low-Emitting Materials Composite Wood and Agrifiber Products	**IEQ 4.4** **Plywood Substructures** **Wood and Combi-Systems**	New/Renovation	1

PART 2 - PRODUCTS

2.1 *MANUFACTURERS*

The basis of the design for the indoor resilient multipurpose surfacing is **Dropzone Comfort 14.5 mm** as provided by Tarkett Sports. All other installation accessories and related components must be either made or approved by the indoor resilient athletic surfacing manufacturer. Other products may be approved as equal if deemed qualified and submitted in accordance with the General Conditions.

2.2 *MATERIALS*

Dropzone Comfort

Physical properties of the indoor resilient athletic surfacing shall conform to the following minimums:

Width	.....	4 ft.
Total Thickness	.....	14.5 mm
Wear Layer Thickness	.....	2.5 mm
Weight	.....	2.34 lbs/sq.ft.
Coefficient of Friction	ASTM F2772	Passed
Static Load	ASTM F970	.009″
CA Section 01350 Compliance	ASTM D5116	Passed
Noise Reduction	ASTM D3389	<0.1g, 100 cycles
Abrasion Resistance	ASTM E492-04	54
Chemical Resistance	ASTM F925	Good
Force Reduction	ASTM F2772	Class 3
Vertical Deformation	ASTM F2772	2.66mm
Thermal Conductivity	ASTM C518	>0.4

1. Color: As available from the indoor resilient athletic surfacing manufacturer's standard range.
2. Adhesive: As approved by the indoor resilient athletic surfacing manufacturer.

PART 3 - EXECUTION

3.1 *EXAMINATION*

A. It is the responsibility of the general contractor/construction manager to ensure that project/site conditions are acceptable for the installation of the indoor resilient athletic flooring.
B. Verify that the area in which the indoor resilient athletic surfacing will be installed is dry and weather tight. Verify that permanent heat, light and ventilation is installed and operable.
C. Verify that all other work that could cause damage, dirt and dust or interrupt the normal pace of the indoor resilient athletic flooring installation is completed or suspended.
D. Verify that there is a stable room temperature of at least 65°F.
E. Verify that there are no foreign materials or objects on the subfloor and that the subfloor is clean and ready for installation.

F. *Direct Full Spread Adhering to Concrete Subfloor with Multi-Poxy*: No higher than 98% RH when tested per ASTM F2170. ASTM F1869 is not approved.
G. Do not average the results of the tests. Report all field test results in writing to the General Contractor, Architect, and End User prior to installation.
H. Verify that the concrete subfloor surface pH level is within the 7 - 10 range.
I. Document the results indicating the slab is within manufacturer's tolerances for slab deviation.

3.2 *PREPARATION OF SURFACES*

A. Sand the entire surface of the concrete slab.
B. Sweep the concrete slab so as to remove all dirt and dust. If a sweeping compound is to be used it must be a sweeping compound that does not contain oils or other items that may inhibit the adhesive bond. (See ASTM F710).
C. Slab must be dust free. In the event that dust impairs adhesive bond, priming the slab prior to application of adhesive may be necessary. Follow installation guidelines.

3.3 *INSTALLATION*

A. The installation area shall be closed to all traffic and activity for a period to be set by the indoor resilient athletic surfacing installer. The indoor resilient athletic surfacing installation shall not begin until the installer is familiar with the existing conditions.
B. All necessary precautions should be taken to minimize noise, smell, dust, the use of hazardous materials and any other items that may inconvenience others.
C. Install the indoor resilient athletic surfacing in strict accordance with the indoor resilient athletic surfacing manufacturer's written instructions.
D. Install the indoor resilient athletic surfacing minimizing cross seams. Provide a seam diagram during the submittal process for approval prior to installation.
E. Install appropriate threshold plates or transition strips where necessary.

3.4 *CLEANING*

Remove all unused materials, tools, and equipment and dispose of any debris properly. Clean the indoor resilient athletic surfacing in accordance with the manufacturer's instructions.

3.5 *PROTECTION*

If required, protect the indoor resilient athletic surfacing from damage using coverings approved by the manufacturer until acceptance of work by the customer or their authorized representative.

3.6 RELATED STANDARDS AND GUIDELINES

A. ASTM F1869 "Standard Test Method for Measuring Moisture Evaporation
Rate of Concrete Subfloor Using Anhydrous Calcium Chloride"
B. ASTM F2170 "Standard Test Method for Determining Relative Humidity
In Concrete Floor Slabs Using In-Situ Probes"
C. ASTM F710 "Standard Practice for Preparing Concrete Floors to Receive Resilient Flooring"
D. ACI 302.2R-06 "Guideline for Concrete Slabs that Receive Moisture Sensitive Flooring Materials"

END OF SECTION

SECTION 09645
ARCHITECTURAL SPECIFICATIONS FOR INDOOR RESILIENT ATHLETIC SURFACING

PART 1 – GENERAL

1.1 *SECTION INCLUDES*

A. Supply and installation of the indoor resilient multipurpose surfacing
B. Application of the game lines
C. References for the correct construction and preparation of concrete slabs to receive resilient flooring.

1.2 *SUBMITTALS*

A. Product Data:
Manufacturer's promotional brochures, specifications and installation instructions
B. Samples:
1. Submit for selection and approval three (3) sets of the indoor resilient multipurpose surfacing, manufacturer's brochures, samples or sample boards of all of the available colors, textures and styles.
2. Submit color samples of all the available game line paint colors for selection and approval.
C. Closeout Submittals:
1. Submit three (3) copies of the indoor resilient multipurpose surfacing and manufacturer's maintenance instructions.
2. Submit three (3) copies of the material and installation warranties as specified.

1.3 *QUALITY ASSURANCE*

A. Qualifications:
1. The indoor resilient multipurpose surfacing shall have been actively marketed for a minimum of five (5) years.
2. The indoor resilient multipurpose surfacing shall be manufactured in an ISO 9001 certified plant.
3. The indoor resilient multipurpose surfacing supplier shall be an established firm experienced in the field and appointed as a distributor by the manufacturer of the indoor resilient multipurpose surfacing.
4. The installer of the indoor resilient multipurpose surfacing shall have a minimum of five (5) years experience in the field installing indoor resilient multipurpose surfacing and have worked on at least five (5) projects of similar size, type and complexity.
B. Certifications:
1. Installer to submit the indoor resilient athletic surfacing manufacturer's or distributor's certification attesting that they are an approved installer of the indoor resilient multipurpose surfacing.
C. Testing:
Tests shall be relative for multi-purpose use with certificates from independent testing resources to be made available upon request. Test results shall be no more than 5 years old and performed according to ASTM and/or EN standard testing procedures.

1.4 *DELIVERY, STORAGE AND HANDLING*

A. Delivery:
Material shall not be delivered until all related work is in place and finished and/or proper storage facilities and conditions can be provided and guaranteed stable according to FieldTurf USA, Inc. recommendations.

B. Storage:
Store the material in a secure, clean and dry location. Maintain temperature between 55° and 85° Fahrenheit. Store the indoor resilient athletic surfacing on a clean flat surface. Do not stack rolls.

1.5 *PROJECT/SITE CONDITIONS*

A. It is the responsibility of the general contractor/construction manager to maintain project/site conditions acceptable for the installation of the indoor resilient multipurpose flooring.

B. The area in which the indoor resilient multipurpose surfacing will be installed shall be dry and weather tight. Permanent heat, light and ventilation shall be installed and operable.

C. All other trades shall have completed their work prior to the installation of the resilient athletic flooring. The general contractor or Construction Manager shall maintain a secure and clean working environment before, during and after the installation. Suspension of other trades' work may be authorized providing their work will not damage the new flooring.

D. Maintain a stable room temperature of at least 65°F for a minimum of one (1) week prior to, during and thereafter installation.

E. An effective low-permeance vapor barrier is placed directly beneath the concrete subfloor. For "on" or "below grade" installations, it is recommended to provide a permanent vapor barrier resistant to long term hydrostatic pressure/moisture exposure. Protrusions should be sealed to prevent moisture migration into the slab. Moisture should not be allowed to enter the slab after the completed construction.

F. Concrete subfloor surface pH level within the 7 to 9 range dependent upon installation type.

G. Concrete subfloor should be no greater than 1/8" within a 10 ft diameter. This tolerance can be measured in accordance with ASTM E1155.
A specified (F_F) of 50 and an (F_L) of 30 should reach this degree of floor flatness and floor level. There is no numerical correlation between F numbers and the deviation from the straight edge, however the above specified numbers should achieve a flat floor with minimal deviation in the slab. Reference ACI 117 and ACI 302.1R. The general contractor should provide a certificate of compliance with the above recommendations.

H. Concrete subfloor must be clean and free of all foreign materials or objects including, but not limited to, curing compounds and sealers.

I. Fill cracks, grooves, voids, depressions, and other minor imperfections with Ardex (or equal) cement-based patching/leveling compounds. Follow the manufacturer's directions. Moveable joints must be treated utilizing specific transitioning joint devices depending upon the architect's recommendations.

Follow current ASTM F710 guidelines for the preparation of concrete slabs to receive resilient flooring.

J. Refer to ACI 302.2R "Guidelines for Concrete Slabs that Receive Moisture-Sensitive Flooring Materials" for concrete design and construction.

K. Concrete slab shall be fortified with continual steel reinforcement. Fiber reinforcement alone shall not be considered adequate fortification.

1.6 *WARRANTY*

A. Materials:
The indoor resilient athletic surfacing shall be covered by the manufacturer against product defects for 3 years.

B. Installation:
The installation of the indoor resilient multipurpose surfacing shall be covered against poor workmanship and faulty installation by a two (2) year written, limited warranty provided by the contractor performing/overseeing the installation.

1.7 *ADDITIONAL MATERIALS*

Furnish to the owner additional materials containing a total of at least 1% of each different color or design of the indoor resilient athletic surfacing used on the project.

1.8 *LEED™ CERTIFICATION*

The indoor resilient athletic surfacing should be able to help this facility to achieve points towards *LEED™ certification.*

LEED categories positively affected by the indoor resilient athletic surfacing:

Product Type			Rubber
Building Reuse Maintain Interior Nonstructural Elements	**MR 1.2**	Renovation	1
Construction Waste Management	**MR 2**	Renovation	2
Construction Waste Management Materials Reuse	**MR 3** **5 % - 1 point** **10% - 2 points**	Renovation	2
Recycled Content	**MR 4** **20% - 2 points**	New/Renovation	2
Regional Materials	**MR5**	New/Renovation	2
Indoor Environmental Air Quality Low VOC Adhesives/Sealants	**IEQ 4.1**	New/Renovation	1
Low-emitting Materials Paints and Coatings	**IEQ 4.2**	New/Renovation	1

PART 2 - PRODUCTS

2.1 *MANUFACTURERS*

The basis of the design for the indoor resilient multipurpose surfacing is Dropzone Elite 22.5mm as provided by Tarkett Sports. All other installation accessories and related components must be either made or approved by the indoor resilient athletic surfacing manufacturer. Other products may be approved as equal if deemed qualified and submitted in accordance with the General Conditions. Test reports confirming compliance from an Independent Sports Laboratory must be provided along with samples, technical data, installation, maintenance, and warranty prior to acceptance as an alternative product.

2.2 *MATERIALS.*

Dropzone Elite 22.5mm multi-layer flooring.

1. Physical properties of the indoor resilient athletic surfacing shall conform to the following minimums:

Property	Standard	Value
Elongation	ASTM D412	250%
Tensile Strength	ASTM D412	>200 PSI
Shore Hardness (Shore A)	ASTM D2240	70±5 (Wear Layer)
Flexibility	ASTM F137	Pass (1/4" mandrel)
Thermal Conductivity	ASTM C518	1.3 BTU/(hr - ft -°F)
Coefficient of Friction	ASTM D2047	0.8
Abrasion Resistance	(H-18 Wheels, 500g, 1000 cycles)ASTM D3389	< 1 G
Impact	EN 1517	0.00 mm
Indentation	EN 1516	0.1 mm
Rolling Load	EN 1569	Passed
VOC Compliance	ASTM 5116 (CA Section 1350)	Passed
Surface Texture	—	Slight
Total Thickness	—	22.5 mm (0.886˝)
Surface Thickness	—	10.5 mm
Base Layer Thickness	—	12 mm
Wear Surface Material	—	Rubber Blend
Base Layer Material	—	Blended Rubber
Roll Lengths	—	25-100 lin. ft.
Roll Width	—	4 ft.
Weight	—	4.2 lbs. per sq.ft.

1. Color: As available from the indoor resilient athletic surfacing manufacturer's standard range.
2. Adhesive: As approved by the indoor resilient athletic surfacing manufacturer.

PART 3 - EXECUTION

3.1 *EXAMINATION*

A. It is the responsibility of the general contractor/construction manager to ensure that project/site conditions are acceptable for the installation of the indoor resilient athletic flooring.
B. Verify that the area in which the indoor resilient athletic surfacing will be installed is dry and weather tight. Verify that permanent heat, light and ventilation is installed and operable.
C. Verify that all other work that could cause damage, dirt and dust or interrupt the normal pace of the indoor resilient athletic flooring installation is completed or suspended.
D. Verify that there is a stable room temperature of at least 65°F.
E. Verify that there are no foreign materials or objects on the subfloor and that the subfloor is clean and ready for installation.
F. *Direct Full Spread Adhering to Concrete Subfloor*: moisture content less than 98 % RH when tested per ASTM F2170. Use only manufacturer recommended Multi-Poxy adhesive.
G. If both tests are performed, use the highest value. Do not average the results of the tests. Report all field test results in writing to the General Contractor, Architect, and End User prior to installation.
H. Verify that the concrete subfloor surface pH level is within the 7 - 11 range.
I. Document the results indicating the slab is within manufacturer's tolerances for slab deviation.

3.2 *PREPARATION OF SURFACES*

A. Sand the entire surface of the concrete slab.
B. Sweep the concrete slab so as to remove all dirt and dust. If a sweeping compound is to be used it must be a sweeping compound that does not contain oil or other items that may inhibit the adhesive bond.
C. Slab must be dust free. In the event that dust impairs adhesive bond, priming the slab prior to application of adhesive may be necessary. Follow installation guidelines.

3.3 *OPTIONS FOR MOISTURE MITIGATION*

A. For projects with moisture conditions higher than the specified tolerances, **TARKOLAY** may be used for conditions that do not 100% per ASTM F2170. Use only approved adhesive as directed by the manufacturer. Tarkolay is available for roll goods only.

3.4 *INSTALLATION*

A. The installation area shall be closed to all traffic and activity for a period to be set by the indoor resilient athletic surfacing installer. The indoor resilient athletic surfacing installation shall not begin until the installer is familiar with the existing conditions.

B. All necessary precautions should be taken to minimize noise, smell, dust, the use of hazardous materials and any other items that may inconvenience others.
C. Install the indoor resilient athletic surfacing in strict accordance with the indoor resilient athletic surfacing manufacturer's written instructions.
D. Install the indoor resilient athletic surfacing minimizing cross seams. Provide a seam diagram during the submittal process for approval prior to installation.
E. Install appropriate threshold plates or transition strips where necessary.

3.5 *CLEANING*

A. Remove all unused materials, tools, and equipment and dispose of any debris properly. Clean the indoor resilient athletic surfacing in accordance with the manufacturer's instructions.

3.6 *PROTECTION*

If required, protect the indoor resilient athletic surfacing from damage using coverings approved by the manufacturer until acceptance of work by the customer or their authorized representative.

3.6 RELATED STANDARDS AND GUIDELINES

A. ASTM F2170 "Standard Test Method for Determining Relative Humidity In Concrete Floor Slabs Using In-Situ Probes"
B. ASTM F710 "Standard Practice for Preparing Concrete Floors to Receive Resilient Flooring"
C. ACI 302.2R-06 "Guideline for Concrete Slabs that Receive Moisture-Sensitive Flooring Materials"

END OF SECTION

SECTION 09 65 66
ARCHITECTURAL SPECIFICATIONS FOR INDOOR RESILIENT ATHLETIC SURFACING

PART 1 – GENERAL

1.1 *SECTION INCLUDES*

A. Supply and installation of the indoor resilient multipurpose surfacing
B. Application of the game lines
C. References for the correct construction and preparation of concrete slabs to receive resilient flooring.

1.2 *SUBMITTALS*

A. Product Data:

Manufacturer's promotional brochures, specifications and installation instructions

B. Samples:

1. Submit for selection and approval three (3) sets of the indoor resilient multipurpose surfacing, manufacturer's brochures, samples or sample boards of all of the available colors, textures and styles.
2. Submit color samples of all the available game line paint colors for selection and approval.

C. Closeout Submittals:

1. Submit three (3) copies of the indoor resilient multipurpose surfacing and manufacturer's maintenance instructions.
2. Submit three (3) copies of the material and installation warranties as specified.

1.3 *QUALITY ASSURANCE*

A. Qualifications:

1. The indoor resilient multipurpose surfacing shall have been actively marketed for a minimum of five (5) years.
2. The indoor resilient multipurpose surfacing shall be manufactured in an ISO 9001 certified plant.
3. The indoor resilient multipurpose surfacing supplier shall be an established firm experienced in the field and appointed as a distributor by the manufacturer of the indoor resilient multipurpose surfacing.
4. The installer of the indoor resilient multipurpose surfacing shall have a minimum of five (5) years experience in the field installing

indoor resilient multipurpose surfacing and have worked on at least five (5) projects of similar size, type and complexity.

B. Certifications:

Installer to submit the indoor resilient athletic surfacing manufacturer's or distributor's certification attesting that they are an approved installer of the indoor resilient multipurpose surfacing.

C. Testing:

Tests shall be relative for multi-purpose use with certificates from independent testing resources to be made available upon request. Test results shall be no more than 5 years old and performed according to ASTM and/or EN standard testing procedures.

1.4 *DELIVERY, STORAGE AND HANDLING*

A. Delivery:

Material shall not be delivered until all related work is in place and finished and/or proper storage facilities and conditions can be provided and guaranteed stable according to Tarkett Sports' recommendations.

B. Storage:

Store the material in a secure, clean and dry location. Maintain temperature between 65° and 85° Fahrenheit. Store the indoor resilient athletic surfacing on a clean flat surface.

1.5 *PROJECT/SITE CONDITIONS*

A. It is the responsibility of the general contractor/construction manager to maintain project/site conditions acceptable for the installation of the indoor resilient multipurpose flooring.
B. The area in which the indoor resilient multipurpose surfacing will be installed shall be dry and weather tight. Permanent heat, light and ventilation shall be installed and operable.
C. All other trades shall have completed their work prior to the installation of the resilient athletic flooring. The general contractor or Construction Manager shall maintain a secure and clean working environment before, during and after the installation. Suspension of other trades' work may be authorized providing their work will not damage the new flooring.

D. Maintain a stable room temperature of at least 65°F for a minimum of one (1) week prior to, during and thereafter installation.
E. An effective low-permeance vapor barrier is placed directly beneath the concrete subfloor. For "on" or "below grade" installations, it is recommended to provide a permanent vapor barrier resistant to long term hydrostatic pressure/moisture exposure. Protrusions should be sealed to prevent moisture migration into the slab. Moisture should not be allowed to enter the slab after the completed construction.
F. Concrete subfloor surface pH level within the 7 to 9 range dependent upon installation type.
G. Concrete subfloor should be no greater than 1/8" within a 10 ft diameter. This tolerance can be measured in accordance with ASTM E1155.
   A specified (F_F) of 50 and an (F_L) of 30 should reach this degree of floor flatness and floor level. There is no numerical correlation between F numbers and the deviation from the straight edge, however the above specified numbers should achieve a flat floor with minimal deviation in the slab. Reference ACI 117 and ACI 302.1R. The general contractor should provide a certificate of compliance with the above recommendations.
H. Concrete subfloor must be clean and free of all foreign materials or objects including, but not limited to, curing compounds and sealers.
I. Fill cracks, grooves, voids, depressions, and other minor imperfections with Ardex (or equal) cement-based patching/leveling compounds. Follow the manufacturer's directions. Moveable joints must be treated utilizing specific transitioning joint devices depending upon the architect's recommendations. Follow current ASTM F710 guidelines for the preparation of concrete slabs to receive resilient flooring.
J. Refer to ACI 302.2R "Guidelines for Concrete Slabs that Receive Moisture-Sensitive Flooring Materials" for concrete design and construction.
K. Concrete slab shall be fortified with continual steel reinforcement. Fiber reinforcement alone shall not be considered adequate fortification.

1.6 *WARRANTY*

A. Materials:

   The indoor resilient athletic surfacing shall be covered by the manufacturer against product defects for 3 years.

B. Installation:

   The installation of the indoor resilient multipurpose surfacing shall be covered against poor workmanship and faulty installation by a two (2)

year written, limited warranty provided by the contractor performing/overseeing the installation.

1.7 *ADDITIONAL MATERIALS*

Furnish to the owner additional materials containing a total of at least 1% of each different color or design of the indoor resilient athletic surfacing used on the project.

1.8 *LEED™ CERTIFICATION*

The indoor resilient athletic surface contributes to achieve points towards *LEED™ certification.*

PART 2 - PRODUCTS

2.1 *MANUFACTURERS*

The basis of the design for the indoor resilient multipurpose surfacing is Dropzone Impact as provided by Tarkett Sports. All other installation accessories and related components must be either made or approved by the indoor resilient athletic surfacing manufacturer. Other products may be approved as equal if deemed qualified and submitted in accordance with the General Conditions.

2.2 *MATERIALS*

Dropzone Impact

1. Physical properties of the indoor resilient athletic surfacing shall conform to the following minimums.
2. Color: Standard colors from the manufacturer's range.
3. Adhesive: As approved by the manufacturer.

Property	Standard	Value
Elongation	ASTM D412	250%
Tensile Strength	ASTM D412	493 psi
Shore Hardness (Shore A)	ASTM D2240	70±5 (Wear Layer)
Reaction to Fire	ASTM E648	Class 1
Smoke Density (Non-Flaming)	ASTM E662	Passed
Coefficient of Friction	ASTM D1894	0.99
Abrasion Resistance	(H-18 Wheels, 500g, 1000 cycles)ASTM D3389	0.37g
Chemical Resistance	ASTM F925	Compliant
Static Load Limit	ASTM F970	≤0.003 (250 psi/ 24 hours)
Tear Resistance	ASTM D624	Passed
Tear Abrasion	ASTM D501	Passed
Resistance to Heat	ASTM F1514	Compliant
Thickness	ASTM F386	9.5 mm (0.374”)
Thickness of Wear Layer	ASTM F410	2.3mm
Weight	—	12.6 lbs per tile
Wear Surface Material	—	Virgin Rubber
Base Layer Material	—	Blended Rubber
Tile Formats Options	—	Square-Edge, Interlocking
Tile Dimensions	—	1 m x 1 m (3.28’ x 3.28’)

PART 3 - EXECUTION

3.1 *EXAMINATION*

A. It is the responsibility of the general contractor/construction manager to ensure that project/site conditions are acceptable for the installation of the indoor resilient athletic flooring.

B. Verify that the area in which the indoor resilient athletic surfacing will be installed is dry and weather tight. Verify that permanent heat, light and ventilation is installed and operable.
C. Verify that all other work that could cause damage, dirt and dust or interrupt the normal pace of the indoor resilient athletic flooring installation is completed or suspended.
D. Verify that there is a stable room temperature of at least 65°F.
E. Verify that there are no foreign materials or objects on the subfloor and that the subfloor is clean and ready for installation.
F. *Direct Full Spread Adhering to Concrete Subfloor* with TNA 965 Acrylic Adhesive: No higher than 85 % RH when tested per ASTM F2170. *Direct Full Spread Adhering to Concrete Subfloor* with TNA 975 Two Part Urethane Adhesive: No higher than 90 % RH when tested per ASTM F2170.
G. Do not average the results of the tests. Report all field test results in writing to the General Contractor, Architect, and End User prior to installation.
H. Verify that the concrete subfloor surface pH level is within the 7 - 10 range.
I. Document the results indicating the slab is within manufacturer's tolerances for slab deviation.

3.2 *PREPARATION OF SURFACES*

A. Sand the entire surface of the concrete slab.
B. Sweep the concrete slab so as to remove all dirt and dust. If a sweeping compound is to be used it must be a sweeping compound that does not contain oils or other items that may inhibit the adhesive bond. (See ASTM F710).
C. Slab must be dust free. In the event that dust impairs adhesive bond, priming the slab prior to application of adhesive may be necessary. Follow installation guidelines.

3.3 *INSTALLATION*

A. The installation area shall be closed to all traffic and activity for a period to be set by the indoor resilient athletic surfacing installer. The indoor resilient athletic surfacing installation shall not begin until the installer is familiar with the existing conditions.
B. All necessary precautions should be taken to minimize noise, smell, dust, the use of hazardous materials and any other items that may inconvenience others.
C. Install the indoor resilient athletic surfacing in strict accordance with the indoor resilient athletic surfacing manufacturer's written instructions.

D. Install the indoor resilient athletic surfacing minimizing cross seams. Provide a seam diagram during the submittal process for approval prior to installation.
E. Install appropriate threshold plates or transition strips where necessary.

3.4 *CLEANING*

A. Remove all unused materials, tools, and equipment and dispose of any debris properly. Clean the indoor resilient athletic surfacing in accordance with the manufacturer's instructions.

3.5 *PROTECTION*

If required, protect the indoor resilient athletic surfacing from damage using coverings approved by the manufacturer until acceptance of work by the customer or their authorized representative.

3.6 *RELATED STANDARDS AND GUIDELINES*

A. ASTM F2170 "Standard Test Method for Determining Relative Humidity In Concrete Floor Slabs Using In-Situ Probes"
B. ASTM F710 "Standard Practice for Preparing Concrete Floors to Receive Resilient Flooring"
C. ACI 302.2R-06 "Guideline for Concrete Slabs that Receive Moisture Sensitive Flooring Materials"

END OF SECTION

SECTION 09 65 66
ARCHITECTURAL SPECIFICATIONS FOR INDOOR RESILIENT ATHLETIC SURFACING

PART 1 – GENERAL

1.1 *SECTION INCLUDES*

A. Supply and installation of the indoor resilient multipurpose surfacing
B. Application of the game lines
C. References for the correct construction and preparation of concrete slabs to receive resilient flooring.

1.2 *SUBMITTALS*

A. Product Data:

Manufacturer's promotional brochures, specifications and installation instructions

B. Samples:

1. Submit for selection and approval three (3) sets of the indoor resilient multipurpose surfacing, manufacturer's brochures, samples or sample boards of all of the available colors, textures and styles.
2. Submit color samples of all the available game line paint colors for selection and approval.

C. Closeout Submittals:

1. Submit three (3) copies of the indoor resilient multipurpose surfacing and manufacturer's maintenance instructions.
2. Submit three (3) copies of the material and installation warranties as specified.

1.3 *QUALITY ASSURANCE*

A. Qualifications:

1. The indoor resilient multipurpose surfacing shall have been actively marketed for a minimum of five (5) years.
2. The indoor resilient multipurpose surfacing shall be manufactured in an ISO 9001 certified plant.
3. The indoor resilient multipurpose surfacing supplier shall be an established firm experienced in the field and appointed as a distributor by the manufacturer of the indoor resilient multipurpose surfacing.
4. The installer of the indoor resilient multipurpose surfacing shall have a minimum of five (5) years experience in the field installing

indoor resilient multipurpose surfacing and have worked on at least five (5) projects of similar size, type and complexity.

B. Certifications:

Installer to submit the indoor resilient athletic surfacing manufacturer's or distributor's certification attesting that they are an approved installer of the indoor resilient multipurpose surfacing.

C. Testing:

Tests shall be relative for multi-purpose use with certificates from independent testing resources to be made available upon request. Test results shall be no more than 5 years old and performed according to ASTM and/or EN standard testing procedures.

1.4 *DELIVERY, STORAGE AND HANDLING*

A. Delivery:

Material shall not be delivered until all related work is in place and finished and/or proper storage facilities and conditions can be provided and guaranteed stable according to Tarkett Sports' recommendations.

B. Storage:

Store the material in a secure, clean and dry location. Maintain temperature between 65° and 85° Fahrenheit. Store the indoor resilient athletic surfacing on a clean flat surface.

1.5 *PROJECT/SITE CONDITIONS*

A. It is the responsibility of the general contractor/construction manager to maintain project/site conditions acceptable for the installation of the indoor resilient multipurpose flooring.
B. The area in which the indoor resilient multipurpose surfacing will be installed shall be dry and weather tight. Permanent heat, light and ventilation shall be installed and operable.
C. All other trades shall have completed their work prior to the installation of the resilient athletic flooring. The general contractor or Construction Manager shall maintain a secure and clean working environment before, during and after the installation. Suspension of other trades' work may be authorized providing their work will not damage the new flooring.

D. Maintain a stable room temperature of at least 65°F for a minimum of one (1) week prior to, during and thereafter installation.
E. An effective low-permeance vapor barrier is placed directly beneath the concrete subfloor. For "on" or "below grade" installations, it is recommended to provide a permanent vapor barrier resistant to long term hydrostatic pressure/moisture exposure. Protrusions should be sealed to prevent moisture migration into the slab. Moisture should not be allowed to enter the slab after the completed construction.
F. Concrete subfloor surface pH level within the 7 to 9 range dependent upon installation type.
G. Concrete subfloor should be no greater than 1/8" within a 10 ft diameter. This tolerance can be measured in accordance with ASTM E1155.
   A specified (F_F) of 50 and an (F_L) of 30 should reach this degree of floor flatness and floor level. There is no numerical correlation between F numbers and the deviation from the straight edge, however the above specified numbers should achieve a flat floor with minimal deviation in the slab. Reference ACI 117 and ACI 302.1R. The general contractor should provide a certificate of compliance with the above recommendations.
H. Concrete subfloor must be clean and free of all foreign materials or objects including, but not limited to, curing compounds and sealers.
I. Fill cracks, grooves, voids, depressions, and other minor imperfections with Ardex (or equal) cement-based patching/leveling compounds. Follow the manufacturer's directions. Moveable joints must be treated utilizing specific transitioning joint devices depending upon the architect's recommendations. Follow current ASTM F710 guidelines for the preparation of concrete slabs to receive resilient flooring.
J. Refer to ACI 302.2R "Guidelines for Concrete Slabs that Receive Moisture-Sensitive Flooring Materials" for concrete design and construction.
K. Concrete slab shall be fortified with continual steel reinforcement. Fiber reinforcement alone shall not be considered adequate fortification.

1.6 *WARRANTY*

A. Materials:

   The indoor resilient athletic surfacing shall be covered by the manufacturer against product defects for 3 years.

B. Installation:

   The installation of the indoor resilient multipurpose surfacing shall be covered against poor workmanship and faulty installation by a two (2)

year written, limited warranty provided by the contractor performing/overseeing the installation.

1.7 *ADDITIONAL MATERIALS*

Furnish to the owner additional materials containing a total of at least 1% of each different color or design of the indoor resilient athletic surfacing used on the project.

1.8 *LEED™ CERTIFICATION*

The indoor resilient athletic surface contributes to achieve points towards *LEED™ certification.*

PART 2 - PRODUCTS

2.1 *MANUFACTURERS*

The basis of the design for the indoor resilient multipurpose surfacing is Dropzone Impact as provided by Tarkett Sports. All other installation accessories and related components must be either made or approved by the indoor resilient athletic surfacing manufacturer. Other products may be approved as equal if deemed qualified and submitted in accordance with the General Conditions.

2.2 *MATERIALS*

Dropzone Impact

1. Physical properties of the indoor resilient athletic surfacing shall conform to the following minimums.
2. Color: Standard colors from the manufacturer's range.
3. Adhesive: As approved by the manufacturer.

Property	Standard	Value
Elongation	ASTM D412	250%
Tensile Strength	ASTM D412	493 psi
Shore Hardness (Shore A)	ASTM D2240	70±5 (Wear Layer)
Reaction to Fire	ASTM E648	Class 1
Smoke Density (Non-Flaming)	ASTM E662	Passed
Coefficient of Friction	ASTM D1894	0.99
Abrasion Resistance	(H-18 Wheels, 500g, 1000 cycles)ASTM D3389	0.37g
Chemical Resistance	ASTM F925	Compliant
Static Load Limit	ASTM F970	≤0.003 (250 psi/ 24 hours)
Tear Resistance	ASTM D624	Passed
Tear Abrasion	ASTM D501	Passed
Resistance to Heat	ASTM F1514	Compliant
Thickness	ASTM F386	9.5 mm (0.374”)
Thickness of Wear Layer	ASTM F410	2.3mm
Weight	—	12.6 lbs per tile
Wear Surface Material	—	Virgin Rubber
Base Layer Material	—	Blended Rubber
Tile Formats Options	—	Square-Edge, Interlocking
Tile Dimensions	—	1 m x 1 m (3.28’ x 3.28’)

PART 3 - EXECUTION

3.1 *EXAMINATION*

A. It is the responsibility of the general contractor/construction manager to ensure that project/site conditions are acceptable for the installation of the indoor resilient athletic flooring.

B. Verify that the area in which the indoor resilient athletic surfacing will be installed is dry and weather tight. Verify that permanent heat, light and ventilation is installed and operable.
C. Verify that all other work that could cause damage, dirt and dust or interrupt the normal pace of the indoor resilient athletic flooring installation is completed or suspended.
D. Verify that there is a stable room temperature of at least 65°F.
E. Verify that there are no foreign materials or objects on the subfloor and that the subfloor is clean and ready for installation.
F. Direct Full Spread Adhering to Concrete Subfloor with TNA 965 Acrylic Adhesive: No higher than 85 % RH when tested per ASTM F2170. Direct Full Spread Adhering to Concrete Subfloor with TNA 975 Two Part Urethane Adhesive: No higher than 90 % RH when tested per ASTM F2170.
G. Do not average the results of the tests. Report all field test results in writing to the General Contractor, Architect, and End User prior to installation.
H. Verify that the concrete subfloor surface pH level is within the 7 - 10 range.
I. Document the results indicating the slab is within manufacturer's tolerances for slab deviation.

3.2 *PREPARATION OF SURFACES*

A. Sand the entire surface of the concrete slab.
B. Sweep the concrete slab so as to remove all dirt and dust. If a sweeping compound is to be used it must be a sweeping compound that does not contain oils or other items that may inhibit the adhesive bond. (See ASTM F710).
C. Slab must be dust free. In the event that dust impairs adhesive bond, priming the slab prior to application of adhesive may be necessary. Follow installation guidelines.

3.3 *INSTALLATION*

A. The installation area shall be closed to all traffic and activity for a period to be set by the indoor resilient athletic surfacing installer. The indoor resilient athletic surfacing installation shall not begin until the installer is familiar with the existing conditions.
B. All necessary precautions should be taken to minimize noise, smell, dust, the use of hazardous materials and any other items that may inconvenience others.
C. Install the indoor resilient athletic surfacing in strict accordance with the indoor resilient athletic surfacing manufacturer's written instructions.

D. Install the indoor resilient athletic surfacing minimizing cross seams. Provide a seam diagram during the submittal process for approval prior to installation.
E. Install appropriate threshold plates or transition strips where necessary.

3.4 *CLEANING*

A. Remove all unused materials, tools, and equipment and dispose of any debris properly. Clean the indoor resilient athletic surfacing in accordance with the manufacturer's instructions.

3.5 *PROTECTION*

If required, protect the indoor resilient athletic surfacing from damage using coverings approved by the manufacturer until acceptance of work by the customer or their authorized representative.

3.6 *RELATED STANDARDS AND GUIDELINES*

A. ASTM F2170 "Standard Test Method for Determining Relative Humidity In Concrete Floor Slabs Using In-Situ Probes"
B. ASTM F710 "Standard Practice for Preparing Concrete Floors to Receive Resilient Flooring"
C. ACI 302.2R-06 "Guideline for Concrete Slabs that Receive Moisture Sensitive Flooring Materials"

END OF SECTION

SECTION 09645
ARCHITECTURAL SPECIFICATIONS FOR INDOOR RESILIENT ATHLETIC SURFACING

PART 1 – GENERAL

1.1 *SECTION INCLUDES*

A. Supply and installation of the indoor resilient multipurpose surfacing
B. Application of the game lines
C. References for the correct construction and preparation of concrete slabs to receive resilient flooring.

1.2 *SUBMITTALS*

A. Product Data:
Manufacturer's promotional brochures, specifications and installation instructions
B. Samples:
1. Submit for selection and approval three (3) sets of the indoor resilient multipurpose surfacing, manufacturer's brochures, samples or sample boards of all of the available colors, textures and styles.
2. Submit color samples of all the available game line paint colors for selection and approval.
C. Closeout Submittals:
1. Submit three (3) copies of the indoor resilient multipurpose surfacing and manufacturer's maintenance instructions.
2. Submit three (3) copies of the material and installation warranties as specified.

1.3 *QUALITY ASSURANCE*

A. Qualifications:
1. The indoor resilient multipurpose surfacing shall have been actively marketed for a minimum of five (5) years.
3. The indoor resilient multipurpose surfacing supplier shall be an established firm experienced in the field and appointed as a distributor by the manufacturer of the indoor resilient multipurpose surfacing.
4. The installer of the indoor resilient multipurpose surfacing shall have a minimum of five (5) years experience in the field installing indoor resilient multipurpose surfacing and have worked on at least five (5) projects of similar size, type and complexity.
B. Certifications:
1. Installer to submit the indoor resilient athletic surfacing manufacturer's or distributor's certification attesting that they are an approved installer of the indoor resilient multipurpose surfacing.
C. Testing:
Tests shall be relative for multi-purpose use with certificates from independent testing resources to be made available upon request. Test results shall be no more than 5 years old and performed according to ASTM and/or EN standard testing procedures.

1.4 *DELIVERY, STORAGE AND HANDLING*

A. Delivery:
Material shall not be delivered until all related work is in place and finished and/or proper storage facilities and conditions can be provided and guaranteed stable according to FieldTurf USA, Inc. recommendations.

B. Storage:
Store the material in a secure, clean and dry location. Maintain temperature between 55° and 85° Fahrenheit. Store the indoor resilient athletic surfacing on a clean flat surface. Do not stack rolls.

1.5 *PROJECT/SITE CONDITIONS*

A. It is the responsibility of the general contractor/construction manager to maintain project/site conditions acceptable for the installation of the indoor resilient multipurpose flooring.

B. The area in which the indoor resilient multipurpose surfacing will be installed shall be dry and weather tight. Permanent heat, light and ventilation shall be installed and operable.

C. All other trades shall have completed their work prior to the installation of the resilient athletic flooring. The general contractor or Construction Manager shall maintain a secure and clean working environment before, during and after the installation. Suspension of other trades' work may be authorized providing their work will not damage the new flooring.

D. Maintain a stable room temperature of at least 65°F for a minimum of one (1) week prior to, during and thereafter installation.

E. An effective low-permeance vapor barrier is placed directly beneath the concrete subfloor. For "on" or "below grade" installations, it is recommended to provide a permanent vapor barrier resistant to long term hydrostatic pressure/moisture exposure. Protrusions should be sealed to prevent moisture migration into the slab. Moisture should not be allowed to enter the slab after the completed construction.

F. Concrete subfloor surface pH level within the 7 to 9 range dependent upon installation type.

G. Concrete subfloor should be no greater than 1/8" within a 10 ft diameter. This tolerance can be measured in accordance with ASTM E1155.
A specified (F_F) of 50 and an (F_L) of 30 should reach this degree of floor flatness and floor level. There is no numerical correlation between F numbers and the deviation from the straight edge, however the above specified numbers should achieve a flat floor with minimal deviation in the slab. Reference ACI 117 and ACI 302.1R. The general contractor should provide a certificate of compliance with the above recommendations.

H. Concrete subfloor must be clean and free of all foreign materials or objects including, but not limited to, curing compounds and sealers.

I. Fill cracks, grooves, voids, depressions, and other minor imperfections with Ardex (or equal) cement-based patching/leveling compounds. Follow the manufacturer's directions. Moveable joints must be treated utilizing specific transitioning joint devices depending upon the architect's recommendations. Follow current ASTM F710 guidelines for the preparation of concrete slabs to receive resilient flooring.

J. Refer to ACI 302.2R "Guidelines for Concrete Slabs that Receive Moisture-Sensitive Flooring Materials" for concrete design and construction.
K. Concrete slab shall be fortified with continual steel reinforcement. Fiber reinforcement alone shall not be considered adequate fortification.

1.6 *WARRANTY*

A. Materials:
The indoor resilient athletic surfacing shall be covered by the manufacturer against product defects for 25 years.
B. Installation:
The installation of the indoor resilient multipurpose surfacing shall be covered against poor workmanship and faulty installation by a two (2) year written, limited warranty provided by the contractor performing/overseeing the installation.

1.7 *ADDITIONAL MATERIALS*

Furnish to the owner additional materials containing a total of at least 1% of each different color or design of the indoor resilient athletic surfacing used on the project.

1.8 *LEED™ CERTIFICATION*

The indoor resilient athletic surfacing should be able to help this facility to achieve points towards *LEED™ certification.*

LEED categories positively affected by the indoor resilient athletic surfacing:

Product Type			Rubber
Building Reuse Maintain Interior Nonstructural Elements	MR 1.2	Renovation	1
Construction Waste Management	MR 2	Renovation	2
Construction Waste Management Materials Reuse	MR 3 5 % - 1 point 10 % - 2 points	Renovation	2
Recycled Content	MR 4 20 % - 2 points	New/Renovation	2
Regional Materials	MR5	New/Renovation	2
Indoor Environmental Air Quality Low VOC Adhesives/Sealants	IEQ 4.1	New/Renovation	1
Low-emitting Materials Paints and Coatings	IEQ 4.2	New/Renovation	1

PART 2 - PRODUCTS

2.1 *MANUFACTURERS*

The basis of the design for the indoor resilient multipurpose surfacing is Dropzone Power as provided by Tarkett Sports. All other installation accessories and related components must be either made or approved by the indoor resilient athletic surfacing manufacturer. Other products may be approved as equal if deemed qualified and submitted in accordance with the General Conditions. Test reports confirming compliance from an Independent Sports Laboratory must be

provided along with samples, technical data, installation, maintenance, and warranty prior to acceptance as an alternative product.

2.2 *MATERIALS.*
Dropzone Power is a single layer flooring system.

1. Physical properties of the indoor resilient athletic surfacing shall conform to the following minimums:

Property	Standard	Value
Slip Resistance	ASTM D2047	>0.8
Tensile Strength	ASTM D412	>265 PSI
Abrasion Resistance	ASTM D3389 / EN 649	< 35 g (2,000 cycles)
Density	ASTM D3676	68.3 lbs./cubic foot
Flammability	-	Pass
Tear Resistance	-	Elongation at break 1.52
VOC Compliance	ASTM D5116	Passed (CA Section 1350)
Surface Texture	—	Slight
Total Thickness	—	18 mm (0.709”)
Roll Length	—	15 ft.
Roll Width	—	4 ft. (± 0.75”)
Weight	—	3.75 lbs. per sq.ft.

1. Color: EPDM chips found throughout the material. Colors are as available from the indoor resilient athletic surfacing manufacturer’s standard range. Custom 85% colors are available upon request.
2. Adhesive: As approved by the indoor resilient athletic surfacing manufacturer.

PART 3 - EXECUTION

3.1 *EXAMINATION*

A. It is the responsibility of the general contractor/construction manager to ensure that project/site conditions are acceptable for the installation of the indoor resilient athletic flooring.
B. Verify that the area in which the indoor resilient athletic surfacing will be installed is dry and weather tight. Verify that permanent heat, light and ventilation is installed and operable.
C. Verify that all other work that could cause damage, dirt and dust or interrupt the normal pace of the indoor resilient athletic flooring installation is completed or suspended.
D. Verify that there is a stable room temperature of at least 65°F.
E. Verify that there are no foreign materials or objects on the subfloor and that the subfloor is clean and ready for installation.
F. *Direct Full Spread Adhering to Concrete Subfloor*: moisture content less than 98 % RH when tested per ASTM F2170. Use only manufacturer recommended Multi-Poxy adhesive.

G. If both tests are performed, use the highest value. Do not average the results of the tests. Report all field test results in writing to the General Contractor, Architect, and End User prior to installation.
H. Verify that the concrete subfloor surface pH level is within the 7 - 11 range.
I. Document the results indicating the slab is within manufacturer's tolerances for slab deviation.

3.2 *PREPARATION OF SURFACES*

A. Sand the entire surface of the concrete slab.
B. Sweep the concrete slab so as to remove all dirt and dust. If a sweeping compound is to be used it must be a sweeping compound that does not contain oil or other items that may inhibit the adhesive bond.
C. Slab must be dust free. In the event that dust impairs adhesive bond, priming the slab prior to application of adhesive may be necessary. Follow installation guidelines.

3.3 *OPTIONS FOR MOISTURE MITIGATION*

For projects with moisture conditions higher than the specified tolerances, TARKOLAY may be used for conditions that do not 100% per ASTM F2170. Use only approved adhesive as directed by the manufacturer. Tarkolay is available for roll goods only.

3.4 *INSTALLATION*

A. The installation area shall be closed to all traffic and activity for a period to be set by the indoor resilient athletic surfacing installer. The indoor resilient athletic surfacing installation shall not begin until the installer is familiar with the existing conditions.
B. All necessary precautions should be taken to minimize noise, smell, dust, the use of hazardous materials and any other items that may inconvenience others.
C. Install the indoor resilient athletic surfacing in strict accordance with the indoor resilient athletic surfacing manufacturer's written instructions.
D. Install the indoor resilient athletic surfacing minimizing cross seams. Provide a seam diagram during the submittal process for approval prior to installation.
E. Install appropriate threshold plates or transition strips where necessary.

3.5 *CLEANING*

Remove all unused materials, tools, and equipment and dispose of any debris properly. Clean the indoor resilient athletic surfacing in accordance with the manufacturer's instructions.

3.6 *PROTECTION*

If required, protect the indoor resilient athletic surfacing from damage using coverings approved by the manufacturer until acceptance of work by the customer or their authorized representative.

3.7 RELATED STANDARDS AND GUIDELINES

A. ASTM F2170 "Standard Test Method for Determining Relative Humidity In Concrete Floor Slabs Using In-Situ Probes"
B. ASTM F710 "Standard Practice for Preparing Concrete Floors to Receive Resilient Flooring"
C. ACI 302.2R-06 "Guideline for Concrete Slabs that Receive Moisture-Sensitive Flooring Materials"

END OF SECTION

SECTION 09645
ARCHITECTURAL SPECIFICATIONS FOR INDOOR RESILIENT ATHLETIC SURFACING

PART 1 – GENERAL

1.1 *SECTION INCLUDES*

A. Supply and installation of the indoor resilient multipurpose surfacing
B. Application of the game lines
C. References for the correct construction and preparation of concrete slabs to receive resilient flooring.

1.2 *SUBMITTALS*

A. Product Data:
Manufacturer's promotional brochures, specifications and installation instructions
B. Samples:
1. Submit for selection and approval three (3) sets of the indoor resilient multipurpose surfacing, manufacturer's brochures, samples or sample boards of all of the available colors, textures and styles.
2. Submit color samples of all the available game line paint colors for selection and approval.
C. Closeout Submittals:
1. Submit three (3) copies of the indoor resilient multipurpose surfacing and manufacturer's maintenance instructions.
2. Submit three (3) copies of the material and installation warranties as specified.

1.3 *QUALITY ASSURANCE*

A. Qualifications:
1. The indoor resilient multipurpose surfacing shall have been actively marketed for a minimum of five (5) years.
2. The indoor resilient multipurpose surfacing shall be manufactured in an ISO 9001 certified plant.
3. The indoor resilient multipurpose surfacing supplier shall be an established firm experienced in the field and appointed as a distributor by the manufacturer of the indoor resilient multipurpose surfacing.
4. The installer of the indoor resilient multipurpose surfacing shall have a minimum of five (5) years experience in the field installing indoor resilient multipurpose surfacing and have worked on at least five (5) projects of similar size, type and complexity.
B. Certifications:
1. Installer to submit the indoor resilient athletic surfacing manufacturer's or distributor's certification attesting that they are an approved installer of the indoor resilient multipurpose surfacing.
C. Testing:
Tests shall be relative for multi-purpose use with certificates from independent testing resources to be made available upon request. Test results shall be no more than 5 years old and performed according to ASTM and/or EN standard testing procedures.

1.4 *DELIVERY, STORAGE AND HANDLING*

A. Delivery:
Material shall not be delivered until all related work is in place and finished and/or proper storage facilities and conditions can be provided and guaranteed stable according to FieldTurf USA, Inc. recommendations.

B. Storage:
Store the material in a secure, clean and dry location. Maintain temperature between 55° and 85° Fahrenheit. Store the indoor resilient athletic surfacing on a clean flat surface. Do not stack rolls.

1.5 *PROJECT/SITE CONDITIONS*

A. It is the responsibility of the general contractor/construction manager to maintain project/site conditions acceptable for the installation of the indoor resilient multipurpose flooring.

B. The area in which the indoor resilient multipurpose surfacing will be installed shall be dry and weather tight. Permanent heat, light and ventilation shall be installed and operable.

C. All other trades shall have completed their work prior to the installation of the resilient athletic flooring. The general contractor or Construction Manager shall maintain a secure and clean working environment before, during and after the installation. Suspension of other trades' work may be authorized providing their work will not damage the new flooring.

D. Maintain a stable room temperature of at least 65°F for a minimum of one (1) week prior to, during and thereafter installation.

E. An effective low-permeance vapor barrier is placed directly beneath the concrete subfloor. For "on" or "below grade" installations, it is recommended to provide a permanent vapor barrier resistant to long term hydrostatic pressure/moisture exposure. Protrusions should be sealed to prevent moisture migration into the slab. Moisture should not be allowed to enter the slab after the completed construction.

F. Concrete subfloor surface pH level within the 7 to 9 range dependent upon installation type.

G. Concrete subfloor should be no greater than 1/8" within a 10 ft diameter. This tolerance can be measured in accordance with ASTM E1155.
A specified (F_F) of 50 and an (F_L) of 30 should reach this degree of floor flatness and floor level. There is no numerical correlation between F numbers and the deviation from the straight edge, however the above specified numbers should achieve a flat floor with minimal deviation in the slab. Reference ACI 117 and ACI 302.1R. The general contractor should provide a certificate of compliance with the above recommendations.

H. Concrete subfloor must be clean and free of all foreign materials or objects including, but not limited to, curing compounds and sealers.

I. Fill cracks, grooves, voids, depressions, and other minor imperfections with Ardex (or equal) cement-based patching/leveling compounds. Follow the manufacturer's directions. Moveable joints must be treated utilizing specific transitioning joint devices depending upon the architect's recommendations.

Follow current ASTM F710 guidelines for the preparation of concrete slabs to receive resilient flooring.

J. Refer to ACI 302.2R "Guidelines for Concrete Slabs that Receive Moisture-Sensitive Flooring Materials" for concrete design and construction.

K. Concrete slab shall be fortified with continual steel reinforcement. Fiber reinforcement alone shall not be considered adequate fortification.

1.6 *WARRANTY*

A. Materials:
The indoor resilient athletic surfacing shall be covered by the manufacturer against product defects for 3 years.

B. Installation:
The installation of the indoor resilient multipurpose surfacing shall be covered against poor workmanship and faulty installation by a two (2) year written, limited warranty provided by the contractor performing/overseeing the installation.

1.7 *ADDITIONAL MATERIALS*

Furnish to the owner additional materials containing a total of at least 1% of each different color or design of the indoor resilient athletic surfacing used on the project.

1.8 *LEED™ CERTIFICATION*

The indoor resilient athletic surfacing should be able to help this facility to achieve points towards *LEED™ certification.*

LEED categories positively affected by the indoor resilient athletic surfacing:

Product Type			Rubber
Building Reuse Maintain Interior Nonstructural Elements	**MR 1.2**	Renovation	1
Construction Waste Management	**MR 2**	Renovation	2
Construction Waste Management Materials Reuse	**MR 3** **5 % - 1 point** **10% - 2 points**	Renovation	2
Recycled Content	**MR 4** **20% - 2 points**	New/Renovation	2
Regional Materials	**MR5**	New/Renovation	2
Indoor Environmental Air Quality Low VOC Adhesives/Sealants	**IEQ 4.1**	New/Renovation	1
Low-emitting Materials Paints and Coatings	**IEQ 4.2**	New/Renovation	1

PART 2 - PRODUCTS

2.1 *MANUFACTURERS*

The basis of the design for the indoor resilient multipurpose surfacing is **Dropzone, Dropzone Speckle, and/or Dropzone Interlocking** as provided by FieldTurf USA, Inc. All other installation accessories and related components must be either made or approved by the indoor resilient athletic surfacing manufacturer. Other products may be approved as equal if deemed qualified and submitted in accordance with the General Conditions. Test reports confirming compliance from an Independent Sports Laboratory must be provided along with samples, technical data, installation, maintenance, and warranty prior to acceptance as an alternative product.

2.2 *MATERIALS.*

Dropzone, Dropzone Speckle, and/or Dropzone Interlocking 8mm recycled non-laminated rubber flooring.

1. Physical properties of the indoor resilient athletic surfacing shall conform to the following minimums:

Width	…….	Roll Width 4ft – Tile 2ft x 2ft
Length	…….	Specify length (min. 15 ft)
Total Thickness	…….	8 mm
Weight	…….	1.92 lbs/sq.ft.
Tensile Strength	ASTM D412	200 minimum
Static Load	ASTM F970	1000 p.s.i (modified test)
Coefficient of Friction	ASTM 2047	>.9
Chemical Resistance	ASTM F925	Excellent
Ambient Noise Reduction	ASTM C423	.10
Impact Sound Insulation	ASTM E492	.45 minimum
Thermal Conductivity	ASTM C518	Approximate .406
Sound Transmission	ASTM 413	.45 minimum

1. Color: As available from the indoor resilient athletic surfacing manufacturer's standard range.
2. Adhesive: As approved by the indoor resilient athletic surfacing manufacturer.

PART 3 - EXECUTION

3.1 *EXAMINATION*

A. It is the responsibility of the general contractor/construction manager to ensure that project/site conditions are acceptable for the installation of the indoor resilient athletic flooring.
B. Verify that the area in which the indoor resilient athletic surfacing will be installed is dry and weather tight. Verify that permanent heat, light and ventilation is installed and operable.

C. Verify that all other work that could cause damage, dirt and dust or interrupt the normal pace of the indoor resilient athletic flooring installation is completed or suspended.
D. Verify that there is a stable room temperature of at least 65°F.
E. Verify that there are no foreign materials or objects on the subfloor and that the subfloor is clean and ready for installation.
F. *Direct Full Spread Adhering to Concrete Subfloor* : moisture content less than 98 % RH when tested per ASTM F2170. Use only manufacturer recommended Multi-Poxy adhesive.
G. If both tests are performed, use the highest value. Do not average the results of the tests. Report all field test results in writing to the General Contractor, Architect, and End User prior to installation.
H. Verify that the concrete subfloor surface pH level is within the 7 - 9 range.
I. Document the results indicating the slab is within manufacturer's tolerances for slab deviation.

3.2 *PREPARATION OF SURFACES*

A. Sand the entire surface of the concrete slab.
B. Sweep the concrete slab so as to remove all dirt and dust. If a sweeping compound is to be used it must be a sweeping compound that does not contain oil or other items that may inhibit the adhesive bond.
C. Slab must be dust free. In the event that dust impairs adhesive bond, priming the slab prior to application of adhesive may be necessary. Follow installation guidelines.

3.3 *OPTIONS FOR MOISTURE MITIGATION*

A. For projects with moisture conditions higher than the specified tolerances, **TARKOLAY** may be used for conditions that do not 98% per ASTM F2170. Use only approved adhesive as directed by the manufacturer. Tarkolay is available for roll goods only.

3.4 *INSTALLATION*

A. The installation area shall be closed to all traffic and activity for a period to be set by the indoor resilient athletic surfacing installer. The indoor resilient athletic surfacing installation shall not begin until the installer is familiar with the existing conditions.
B. All necessary precautions should be taken to minimize noise, smell, dust, the use of hazardous materials and any other items that may inconvenience others.
C. Install the indoor resilient athletic surfacing in strict accordance with the indoor resilient athletic surfacing manufacturer's written instructions.
D. Install the indoor resilient athletic surfacing minimizing cross seams. Provide a seam diagram during the submittal process for approval prior to installation.
E. Install appropriate threshold plates or transition strips where necessary.

3.5 *CLEANING*

A. Remove all unused materials, tools, and equipment and dispose of any debris properly. Clean the indoor resilient athletic surfacing in accordance with the manufacturer's instructions.

3.6 *PROTECTION*

If required, protect the indoor resilient athletic surfacing from damage using coverings approved by the manufacturer until acceptance of work by the customer or their authorized representative.

3.6 RELATED STANDARDS AND GUIDELINES

A. ASTM F2170 "Standard Test Method for Determining Relative Humidity In Concrete Floor Slabs Using In-Situ Probes"
B. ASTM F710 "Standard Practice for Preparing Concrete Floors to Receive Resilient Flooring"
C. ACI 302.2R-06 "Guideline for Concrete Slabs that Receive Moisture-Sensitive Flooring Materials"

END OF SECTION

SECTION 09 65 66
ARCHITECTURAL SPECIFICATIONS FOR INDOOR RESILIENT PORTABLE SURFACING

PART 1 – GENERAL

1.1 *SECTION INCLUDES*

A. Supply and installation of the indoor resilient portable multipurpose surfacing
B. Application of the game lines
C. References for the correct construction and preparation of concrete slabs to receive resilient flooring.

1.2 *SUBMITTALS*

A. Product Data:
Manufacturer's promotional brochures, specifications and installation instructions

B. Manufacturer Certifications:
1. Provide certification that accurately identifies the Original Equipment Manufacturer (OEM) of flooring furnished for this project including manufacturer's name, address and factory location.
2. Suppliers of private label flooring for this project must identify themselves as such and fully disclose the OEM information listed above.

C. Samples:
1. Submit for selection and approval three (3) sets of the indoor resilient portable multipurpose surfacing, manufacturer's brochures, samples or sample boards.

D. Closeout Submittals:
1. Submit three (3) copies of the indoor resilient portable multipurpose surfacing and manufacturer's maintenance instructions.
2. Submit three (3) copies of the material warranties as specified.

1.3 *QUALITY ASSURANCE*

A. Qualifications:

1. The indoor resilient portable multipurpose surfacing supplier shall be an established firm, experienced in the field, and appointed as a distributor by the manufacturer of the indoor resilient multipurpose surfacing.
2. The installer of the indoor resilient multipurpose surfacing shall have a minimum of five (5) years of experience in the field installing indoor resilient multipurpose surfacing.

1.4 *DELIVERY, STORAGE AND HANDLING*

A. Delivery:
Material shall not be delivered until all related work is in place and finished and/or proper storage facilities and conditions can be provided and guaranteed stable according to Tarkett Sports' recommendations.

B. Storage:
Store the material in a secure, clean and dry location. Maintain temperature between 55° and 85° Fahrenheit. Store resilient portable athletic flooring on flat surfaces.

1.5 *PROJECT/SITE CONDITIONS*

A. It is the responsibility of the general contractor/construction manager to maintain project/site conditions acceptable for the installation of the indoor resilient portable flooring.
B. The area in which the indoor resilient portable multipurpose surfacing will be installed shall be dry and weather tight. Permanent heat, light and ventilation shall be installed and operable.
C. All other trades shall have completed their work prior to the installation of the portable resilient athletic flooring. The general contractor or Construction Manager shall maintain a secure and clean working environment before, during and after the installation. Maintain a stable room temperature of at least 65°F for a minimum of one (1) week prior to, during and thereafter installation.
D. An effective low-permeance vapor barrier is placed directly beneath the concrete subfloor. For "on" or "below grade" installations, it is recommended to provide a permanent vapor barrier resistant to long term hydrostatic pressure/moisture exposure. Protrusions should be sealed to prevent moisture migration into the slab. Moisture should not be allowed to enter the slab after the completed construction.
E. Concrete subfloor should be no greater than 1/8" within a 10 ft. diameter.
F. Concrete subfloor must be clean and free of all foreign materials or objects.

1.6 *WARRANTY*

A. Materials:
The indoor resilient portable surfacing shall be covered by the manufacturer against product defect for 1 year.

1.7 *ADDITIONAL MATERIALS*

Furnish to the owner additional materials containing a total of at least 2% of each different color or design of the indoor resilient athletic surfacing used on the project.

PART 2 - PRODUCTS

2.1 *MANUFACTURERS*

The basis of the design for the indoor resilient portable surfacing shall be Omnisports EasyCourt as provided by Tarkett Sports.

2.2 *MATERIALS.*

Omnisports Easy Court Golden Maple is a prefabricated portable court system compromised of a patent pending process of construction, design,

and materials. This light weight, easy to install, and durable system provides quick installations with high performance characteristics.

A.) Physical properties of the indoor resilient portable surfacing shall conform to the following minimums:

Surface and Performance Properties:

Surface Thickness	…….	2mm
Color Option	……..	Golden Maple
Vertical Deformation	PASSED	ASTM F2772
Surface Finish Effect	PASSED	ASTM F2772 (80 – 110)
Ball Rebound	PASSED	ASTM F2772 > 90%
Shock Absorption	PASSED	ASTM F2772 Average 60%

.

Base Structure Properties:

Density	ASTM D375	2.8 lb./ft3
Dimensions	……	3.44ft x 5.17ft
Weight Base and Surface	……..	21 lb. per tile (approx.)
Thickness	ASTM D375	45mm (1.77”)
Total Thickness	……...	47mm (1.85”)

B). Game Line Paint Primer:
As approved by the indoor resilient athletic surfacing manufacturer.

C). Game Line Paint:
As approved by the indoor resilient athletic surfacing manufacturer. Colors are to be selected from the manufacturer’s standard range.

PART 3 - EXECUTION

3.1 *EXAMINATION*

A. It is the responsibility of the general contractor/construction manager to ensure that project/site conditions are acceptable for the installation of the indoor resilient portable athletic flooring.
B. Verify that the area in which the indoor resilient portable surfacing will be installed is dry and weather tight. Verify that permanent heat, light and ventilation is installed and operable.
C. Verify that all other work that could cause damage, dirt and dust or interrupt the normal pace of the indoor resilient portable athletic flooring installation is completed or suspended.
D. Verify that there is a stable room temperature of at least 65°F.
E. Verify that there are no foreign materials or objects on the subfloor and that the subfloor is clean and ready for installation.

3.2 *PREPARATION OF SURFACES*

A. Sand the entire surface of the concrete slab.
B. Sweep the concrete slab so as to remove all dirt and dust.

3.3 *INSTALLATION*

A. The installation area shall be closed to all traffic and activity for a period to be set by the indoor resilient portable surfacing installer.
B. Install the indoor resilient portable surfacing in strict accordance with the indoor resilient athletic surfacing manufacturer's written instructions.
C. Paint game lines using approved game line paint primer and game line paint in strict accordance with the game line paint manufacturer's instructions.
D. Install appropriate threshold plates or transition strips where necessary.

3.4 *CLEANING*

A. Remove all unused materials, tools, and equipment and dispose of any debris properly. Clean the indoor resilient athletic portable surfacing in accordance with the manufacturer's instructions.

3.5 *PROTECTION*

If required, protect the indoor resilient portable athletic surfacing from damage using coverings approved by the manufacturer until acceptance of work by the customer or their authorized representative.

3.6 RELATED STANDARDS AND GUIDELINES

A. ASTM F2170 "Standard Test Method for Determining Relative Humidity In Concrete Floor Slabs Using In-Situ Probes"
B. ASTM F710 "Standard Practice for Preparing Concrete Floors to Receive Resilient Flooring"

END OF SECTION

ARTIFICIAL GRASS FIELDTURF
EASYFIELD

PART 1 - GENERAL

1.1 SUMMARY

A. Furnish all materials and documentation necessary to install modular artificial grass FieldTurf EasyField as indicated on the plans and as specified herein; including components and accessories required for a complete installation.

1.2 REFERENCE STANDARDS

A. ASTM – American Society for Testing and Materials.
   1. EN 12235 – Vertical Ball Rebound
   2. EN 1177 (2008) – Critical Fall Height / HIC
   3. EN 12234 – Ball Roll
   4. AAA FIFA Method 04A – Shock Absorption
   5. AAA Method – Energy Restitution
   6. ASTM F355 - Gmax
   7. ASTM D2859-06: 2011 – Pill Flammability

1.3 SUBMITTALS

A. Substitutions: Other products are acceptable if in compliance with all requirements of these specifications. Submit alternate products to Architect for approval prior to bidding in accordance Section 01 25 13, Product Substitution Procedures.
   1. Provide substantiation that proposed system does not violate any other manufacturer's patents, patents allowed or patents pending.
   2. Provide a sample copy of insured, non-prorated warranty and insurance policy information.

B. Shop Drawings:
   1. Indicate field layout; field marking plan and details for the specified sports

C. Product Data:
   1. Submit data in sufficient detail to indicate compliance with the contract documents.
   2. Submit manufacturer's instructions for installation.
   3. Submit manufacturer's instructions for maintenance for the proper care and preventative maintenance of the synthetic turf system, including painting and markings.

D. Samples: Submit samples, minimum 12 x 12 inches, illustrating details of finished product in amounts as required by General Requirements, or as requested by Architect.

E. Product Certification:
   1. Submit manufacturer’s certification that products and materials comply with requirements of the specifications.
   2. Submit test results indicating compliance with Reference Standards.

F. List of existing installations: Submit list including respective Owner’s representative and

telephone number.

G. Warranties: Submit warranty and ensure that forms have been completed in Owner's name and registered with approved manufacturer.

1.4 QUALITY ASSURANCE

A. Comply with Section 01 43 00, Quality Assurance.

B. Manufacturer Qualifications: Company specializing in manufacturing products specified in this section. The turf contractor and/or the turf manufacturer:
   1. Shall have a minimum of 10 installations of the specified product in North America
   2. Shall have a minimum of 3000 artificial turf fields of any style installed in North America. Fields must be a minimum of 65000 square feet.
   3. Shall have installed a minimum of X fields in State.
   4. Shall have a minimum of 5 NFL game and/or practice fields in play for the previous year
   5. Shall have minimum 25 NCAA Division 1 game and/or practice fields installed.

C. Installer: Company shall specialize in performing the work of this section. The Contractor shall provide competent workmen skilled in this specific type of modular synthetic grass installation.
   1. The designated Supervisory Personnel on the project shall be certified, in writing by the turf manufacturer, as competent in the installation of turf material.
   2. Installer shall be certified by the manufacturer and licensed.
   3. The installer supervisor shall have a minimum of 5 years of experience as either a construction manager or a supervisor of synthetic turf installations.

D. Pre-Installation Conference: Conduct conference at project site at time to be determined by Architect. Review methods and procedures related to installation including, but not limited to, the following:
   1. Inspect and discuss existing conditions and preparatory work performed under other contracts.
   2. In addition to the Contractor and the installer, arrange for the attendance of installers affected by the Work, The Owner’s representative, and the Architect.

E. The Contractor shall verify special conditions required for the installation of the system.

F. The Contractor shall notify the Architect of any discrepancies.

1.5 DELIVERY, STORAGE, AND HANDLING

A. Comply with Section 01 60 00, Product Requirements.

B. Prevent contact with materials that may cause dysfunction.

C. Deliver and store components with labels intact and legible.

D. Store materials/components in a safe place, under cover, and elevated above grade.

E. Protect from damage during delivery, storage, handling and installation. Protect from damage by other trades.

F. Inspect all delivered materials and products to ensure they are undamaged and in good condition.

G. Comply with manufacturer's recommendations.

1.6 SEQUENCING AND SCHEDULING

A. Coordinate the Work with installation of work of related trades as the Work proceeds.

B. Sequence the Work in order to prevent deterioration of installed system.

1.7 WARRANTY AND GUARANTEE

A. See Section 01780 - Closeout Submittals, For Additional Warranty Requirements.

- The Contractor shall provide a warranty to the Owner that covers defects in materials and workmanship of the turf for a period of one (1) year from the date of substantial completion. The turf manufacturer must verify that their representative has inspected the installation and that the work conforms to the manufacturer's requirements. The manufacturer's warranty shall include general wear and damage caused from UV degradation. The warranty shall specifically exclude vandalism, and acts of God beyond the control of the Owner or the manufacturer. The warranty shall be non-prorated. The Contractor shall provide a warranty to the Owner that covers defects in the installation workmanship, and further warrant that the installation was done in accordance with both the manufacturer's recommendations and any written directives of the manufacturer's representative.
- 1-year warranty.
- Must cover full 100% replacement value of total square footage installed
- Policies that include self-insurance or self-retention clauses shall not be considered.
- Policy cannot include any form of deductible amount.
- Sample policy must be provided at time of bid to prove that policy is in force. A letter from an agent or a sample Certificate of Insurance will not be acceptable.

B. The artificial grass system must maintain a G-max of less than 200 for the life of the Warranty as per ASTM F1936.

1.8 MAINTENANCE SERVICE

A. Contractor shall train the Owner's facility maintenance staff in the use of the turf manufacturer's recommended maintenance equipment.

PART 2 - PRODUCTS

2.1 ACCEPTABLE SUPPLIER

A. Approved suppliers are as follows:

1. FieldTurf USA Inc.
   175 N. Industrial Blvd
   Calhoun, GA 30701
   P: 800-724-2969

Model: FieldTurf EasyField

2.2 MATERIALS AND PRODUCTS

A. Artificial grass FieldTurf system materials shall consist of the following:
   1. Carpet made of slit-film polyethylene fibers with thatch fiber tufted into a polypropylene backing.
   2. Glue, paint, seaming fabric and other materials used to install and mark the artificial grass FieldTurf.

B. The installed artificial grass slit-film FieldTurf shall have the following properties:

Standard	Property	Specification
ASTM D1577	Slit-Film Denier	10,000+
ASTM D1577	Thatch Denier	5,000
ASTM D5823	Pile Height	1.125”
ASTM D5793	Stitch Gauge	3/16”-1/4”
ASTM D5848	Pile Weight	72oz/square yard
ASTM D5848	Primary Backing	7oz/square yard
ASTM D5848	Secondary Backing	20oz/square yard
ASTM D5848	Total Weight	99oz/square yard
ASTM D1335	Tuft Bind (Without Infill)	8+ lbs
ASTM D5034	Grab Tear (Width)	200 lbs/force
ASTM D5034	Grab Tear (Length)	200 lbs/force
ASTM F355/F1936	Impact Attenuation (Gmax)	<200
	Modular Interlocking Shockpad	45mm
	Approximate Weight of Finished Panel	21 lbs

Variation of +/- 5% of above listed properties is within normal manufacturing tolerances

C. Carpet shall consist of slit-film fibers and thatch fibers tufted into a primary backing with a secondary backing.
   1. Turf pieces shall be adhered to the pad underlayment
   2. The finished turf panels shall be vertically interlocked with one another and loose laid onto the base.
   3. Turf panels shall be cut to fit any curved or irregular edge areas based on the agreed upon drawings and layout.

D. Backing:
   1. Primary backing shall be a polypropylene fabric
   2. Secondary backing shall consist of an application of urethane to lock the fiber tufts in place.

E. Each panel turf area shall be 17.78 square feet or 3.44ft X 5.17ft.
   1. Panels will be shipped on pallets. Pallets are not to be stacked on top of one another.

F. Lines, if needed, shall be painted with paint approved by the synthetic turf manufacturer.

G. Velcro is not an acceptable way of fastening the main body of turf carpet and/or turf panels to one another.

H. Edging options for panels (if relevant) must be taken into consideration prior to the order confirmation.

PART 3 - EXECUTION

3.1 EXAMINATION

A. Verify that all sub-base leveling is complete prior to installation.

B. Installer shall examine the surface to receive the synthetic turf and accept the sub-base planarity in writing prior to the beginning of installation.
   1. Acceptance is dependent upon the Owner's test results indicating base is in compliance with manufacturer's specifications.
   2. The surface shall be accepted by Installer as "clean" as installation commences and shall be maintained in that condition throughout the process.

C. Correct conditions detrimental to timely and proper completion of Work.

D. Do not proceed until unsatisfactory conditions are corrected.

E. Beginning of installation means acceptance of existing conditions.

3.2 PREPARATION

A. Prior to the beginning of installation, inspect the sub-base for tolerance to grade.

B. Sub-base acceptance shall be subject to receipt of test results (by others) for compaction and planarity that sub-base is in compliance with manufacturer's specifications and recommendations.

C. Dimensions of the field and locations for markings shall be measured by a registered surveyor to verify conformity to the specifications and applicable standards. A record of the finished field as-built measurements shall be made.

3.3 INSTALLATION - GENERAL

A. The installation shall be performed in full compliance with approved Shop Drawings.

B. The designated Supervisory personnel on the project must be certified, in writing by the turf manufacturer, as competent in the installation of this material.

3.4 INSTALLATION

A. Install at location(s) indicated, to comply with final shop drawings, manufacturers'/installer's instructions.

B. The Contractor shall strictly adhere to specified procedures. Any variance from these

requirements shall be provided in writing, by the manufacturer's on-site representative, and submitted to the Architect and/or Owner, verifying that the changes do not in any way affect the Warranty.

C. Turf shall be installed directly over the properly prepared base. Extreme care shall be taken to avoid disturbing the base.

D. Markings shall be painted in accordance with turf and paint manufacturers' recommendations. Number of applications will be dependent upon installation and field conditions.

E. Upon completion of installation, the finished field shall be inspected by the installation crew and an installation supervisor.

3.5 FIELD MARKINGS

A. Any field markings shall be applied in accordance with approved shop drawings.

3.6 ADJUSTMENT AND CLEANING

A. Do not permit traffic over unprotected surface.

B. All usable remnants of new material shall become the property of the Owner.

C. The Contractor shall keep the area clean throughout the project and clear of debris.

D. Surfaces, recesses, enclosures, and related spaces shall be cleaned as necessary to leave the work area in a clean, immaculate condition ready for immediate occupancy and use by the Owner.

3.7 PROTECTION

A. Protect installation throughout construction process until date of final completion.

HEALTHIERCHOICE®

100% HIGH DENSITY MEMORY FOAM CARPET CUSHION

DESCRIPTION
Premium 100% high density memory foam cushion for use under all carpet styles.

STYLE / SKU / ROLL SPECS
WHT180 – 6' x 30' roll,180 sq. ft., 20 sq. yd. (75.5 lbs.)
WHT270 – 6' x 45' roll, 270 sq. ft., 30 sq. yd. (110 lbs.)

MATERIAL
Frothed polyurethane – a visco-elastic "memory foam" material.

THICKNESS
0.5" (1/2")

DENSITY
10lbs/ft^3 (48.82kg/m^3)

SOUND RATING
Impact Insulation Class (ASTM E492-90) . . . . . 90 IIC

WATER RESISTANCE
British Spill Test Method E . . . . . Pass
Breathable Integral Skin Barrier, allows vapor to pass while blocking liquid spills, making clean-up easier and more effective.

INSULATION RATING
R-Factor (ASTM C518-10) 1.60
Excellent for radiant heated floors.

FIRE RATING
NBS Smoke Chamber . . . . . <100 max
Pill Test (FF 1-70) . . . . . Pass

DURABILITY
Compression Set . . . . . 7% max
Indentation Load Deflection (25%) . . . . . 4.20 lbs/ft^2
Indentation Load Deflection (65%) . . . . . 20.00 lbs/ft^2

INSTALLATION
Engineered for stretch-in installation. Install foam side up.

WARRANTY
Warranted for a lifetime to the original purchaser.

RENEWABLE CONTENT
IMade in part with eco-friendly soybean oil, lessening dependence on petrochemicals. This reduces global warming emissions and the need for foreign oil while supporting local farmers and local producers.
Applicable towards LEED Credit MR 6 – Rapidly Renewable Resources.

INDOOR AIR QUALITY
CRI Green Label certified. The only carpet cushion GREENGUARD Indoor Air Quality Certified® as a low emitting interior building material.
Applicable towards LEED Credit EQ 4.3 – Low Emitting Product.

ANTIMICROBIAL
Ultra-Fresh® Antimicrobial prevents mold, mildew, and bacterial growth while controlling dust mites for life-long odor free installation.

RECYCLABLE
Zero-Landfill Manufacturing waste, all materials are reused in products with recycled content. Post consumer recyclable, a valued commodity as recycled foam in the manufacturing of rebond padding.

NOTE: Specification values subject to a 7% manufacturing tolerance.

ultra-fresh | GREENGUARD | NATURAL RESOURCES | CRI GREEN LABEL +PLUS | ZERO% LANDFILL MANUFACTURING

HC WHITE

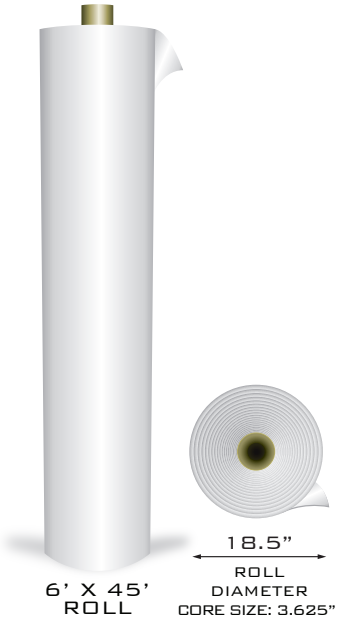

Healthier Choice Flooring | 401 Jones Street, Dalton GA 30720 | Phone (800) 872-8426 | Fax (706) 226-8293 | www.healthierchoice.com

SECTION 09 65 66
ARCHITECTURAL SPECIFICATIONS FOR INDOOR RESILIENT ATHLETIC SURFACING

PART 1 – GENERAL

1.1 *SECTION INCLUDES*

A. Supply and installation of the indoor resilient multipurpose surfacing
B. Application of the game lines
C. References for the correct construction and preparation of concrete slabs to receive resilient flooring.

1.2 *SUBMITTALS*

A. Product Data:
   1. Manufacturer's promotional brochures, specifications and installation instructions
B. Manufacturer Certifications:
   1. Provide certification that accurately identifies the Original Equipment Manufacturer (OEM) of flooring furnished for this project including manufacturer's name, address and factory location.
   2. Suppliers of private label flooring for this project must identify themselves as such and fully disclose the OEM information listed above.
   3. All "manufacturer" requirements in these specifications must be complied with by the OEM, including warranties, certifications, qualifications, product data, test results, environmental requirements, performance data, etc.
C. Samples:
   1. Submit for selection and approval three (3) sets of the indoor resilient multipurpose surfacing, manufacturer's brochures, samples or sample boards of all of the available colors, textures and styles.
   2. Submit color samples of all the available game line paint colors for selection and approval.
D. Closeout Submittals:
   1. Submit three (3) copies of the indoor resilient multipurpose surfacing and manufacturer's maintenance instructions.
   2. Submit three (3) copies of the material and installation warranties as specified.

1.3 *QUALITY ASSURANCE*

A. Qualifications:
   1. The indoor resilient multipurpose surfacing shall have been actively marketed for a minimum of ten (10) years.
   2. The indoor resilient multipurpose surfacing shall be manufactured in an ISO 9001 certified plant.
   3. The indoor resilient multipurpose surfacing shall be manufactured in an ISO 14001 certified plant.
   4. The indoor resilient multipurpose surfacing supplier shall be an established firm, experienced in the field, and competent in the techniques required by the manufacturer.
   5. The installer of the indoor resilient multipurpose surfacing shall have a minimum of five (5) years of experience in the field installing indoor resilient multipurpose surfacing and have worked on at least five (5) projects of similar size, type and complexity.

B. Certifications:
   1. Installer to submit the indoor resilient athletic surfacing manufacturer's certification attesting that they are a trained installer of the indoor resilient multipurpose surfacing.
   2. The indoor resilient multipurpose surfacing manufacturer to submit official ISO 9001 certification for the facility in which the indoor resilient multipurpose surfacing is manufactured.

C. Testing:
   1. Tests shall be relative for multi-purpose use with certificates from independent testing resources to be made available upon request.
   2. Test results shall be no more than 5 years old and performed according to ASTM standard testing procedures.

1.4 *DELIVERY, STORAGE AND HANDLING*

A. Delivery:
   Material shall not be delivered until all related work is in place and finished and/or proper storage facilities and conditions can be provided and guaranteed stable according to FieldTurf USA, Inc. recommendations.

B. Storage:
   1. Store the material in a secure, clean and dry location.
   2. Maintain temperature between 55° and 85° Fahrenheit.
   3. Store the indoor resilient athletic surfacing rolls in an upright position on a smooth flat surface immediately upon delivery to jobsite.
   4. Rolls shipped in rigid protective cardboard containers can be laid horizontally prior to unpacking and installation.

1.5 *PROJECT/SITE CONDITIONS*

A. It is the responsibility of the general contractor/construction manager to maintain project/site conditions acceptable for the installation of the indoor resilient multipurpose flooring.

B. The area in which the indoor resilient multipurpose surfacing will be installed shall be dry and weather tight. Permanent heat, light and ventilation shall be installed and operable.

C. All other trades shall have completed their work prior to the installation of the resilient athletic flooring. The general contractor or construction manager shall maintain a secure and clean working environment before, during and after the installation.

D. Maintain a stable room temperature of at least 65°F for a minimum of one (1) week prior to, during and thereafter installation.

E. An effective low-permeance vapor barrier is placed directly beneath the concrete subfloor. For "on" or "below grade" installations, it is recommended to provide a permanent vapor barrier resistant to long term hydrostatic pressure/moisture exposure. Protrusions should be sealed to prevent moisture migration into the slab. Moisture should not be allowed to enter the slab after the completed construction.

F. Concrete subfloor surface pH level within the 7 to 11 range dependent upon installation type.

G. Concrete subfloor should be no greater than 1/8" within a 10 ft diameter. This tolerance can be measured in accordance with ASTM E1155. A specified (F_F) of 50 and an (F_L) of 30 should reach this degree of floor flatness and floor level. There is no numerical correlation between F numbers and the deviation from the straight

edge. However, the above specified numbers should achieve a flat floor with minimal deviation in the slab. Reference ACI 117 and ACI 302.1R. The general contractor should provide a certificate of compliance with the above recommendations.

H. Concrete subfloor must be clean and free of all foreign materials or objects including, but not limited to, curing compounds and sealers.

I. Fill cracks, grooves, voids, depressions, and other minor imperfections. Follow the manufacturer's directions. Moveable joints must be treated utilizing specific transitioning joint devices depending upon the architect's recommendations. Follow current ASTM F710 guidelines for the preparation of concrete slabs to receive resilient flooring.

J. Refer to ACI 302.2R "Guidelines for Concrete Slabs that Receive Moisture-Sensitive Flooring Materials" for concrete design and construction.

K. Concrete slab shall be fortified with continual steel reinforcement. Fiber reinforcement alone shall not be considered adequate fortification.

1.6 *WARRANTY*

A. Special Limited Warranty:
   1. Manufacturer's standard form in which manufacturer agrees to repair or replace sports flooring including labor that fails within specified warranty period.

B. Material warranty must be direct from the product manufacturer.
   1. Material warranties from separate or third party insurance providers are not valid.
   2. Material warranties must come from original manufacturer or division thereof. Private label warranties from distributors or brokers are not valid. Supply original point of manufacturing upon request.

C. Failures include, but are not limited to, the following:
   1. Material manufacturing defects.
   2. Surface wear and deterioration to the point of wear-through of wear layer per ASTM F410/ASTM F1303.
   3. Failure due to substrate moisture exposure exceeding 80 percent relative humidity when tested according to ASTM F2170.

D. Warranty Period:
   1. For material defects and surface wear-through: **10** years from date of substantial completion.

E. Installer's Limited Warranty:
   1. Installer's standard form in which installer agrees to repair or replace sports flooring that fails due to poor workmanship or faulty installation within the specified warranty period.
   2. Warranty Period: 2 years from date of substantial completion.

1.7 *ADDITIONAL MATERIALS*

A. Furnish to the owner additional materials containing a total of at least 1% of each different color or design of the indoor resilient athletic surfacing used on the project.

1.8 *LEED™ CERTIFICATION*

A. The indoor resilient athletic surfacing should be able to help this facility to achieve points towards *LEED™ certification.* Flooring system must be certified by FloorScore.
B. LEED categories positively affected by the indoor resilient athletic surfacing:

LEED™ V4 Credit		Contribution
Materials & Resources: Building Product Disclosure & Optimization (BPDO)		
MRc3: Sourcing of Raw Materials	Options 1 & 2	2 Points
MRc4: Material Ingredients	Option 1	1 Point
MRc5: Construction and Demolition Management	Reclamation and Recycling	ReStart® Program
Indoor Environmental Quality		
EQc2: Low-Emitting Materials	TVOC: 0.5 mg/m3 or less	FloorScore®

PART 2 - PRODUCTS

2.1 *MANUFACTURERS*

A. The basis of the design for the indoor resilient multipurpose surfacing is Dancefloor and Inspiration Pro system as manufactured by Tarkett.
B. All other installation accessories and related components must be either made or approved by the indoor resilient athletic surfacing manufacturer.
C. Other products may be approved as equal if deemed qualified and submitted in accordance with the General Conditions.
D. Test reports confirming compliance from an independent sports laboratory must be provided along with samples, technical data, installation, maintenance, and warranty prior to acceptance as an alternative product.

2.2 *MATERIALS*

A. Dancefloor - Prefabricated sport surface 3.5 mm with solid color design and slightly textured embossed surface as supplied by Tarkett.
   1. Surface shall be a satin/matte finish.
   2. The Inspiration Pro System shall incorporate Inspiration Pro double tongue and grooved multi-ply engineered panels, force reduction cushion, and appropriate vapor retarder.

B. Physical properties of the indoor resilient athletic surfacing shall conform to the following minimums:

Width	—	6′ 6″ (2 m)
Length	—	75′ (23m)) approx.
Wear Layer	EN 429	0.65 mm
Total Thickness	EN 428/EN 429	3.5 mm
Total Combined Thickness		47 mm (1.85″)
Wear Layer	Type 1– Grade 1	ASTM F1303/F410
Weight	EN 430	3.3kg/m² (0.72 lbs./sq. ft.)
Force Reduction	ASTM F2772	74% +/-
Slip Resistance	AS 4586	P3
Reaction to Fire	ISO AS 9239-1	8.6 kW/m²
Chemical Resistance	ISO 26987/EN 423	High
Dimensional Stability	ISO 23999/EN 434	≤0.10%
Abrasion Resistance	EN 660: Part 2	Group T: ≤ 2.0mm³
Static Load Limit	PASSED	ASTM F970- Load 175 Lbs.
Phthalate-free technology	—	YES
REACH Compliant	—	YES
Heavy Metals	—	NO
ISO 9001	—	YES
ISO 14001	—	YES

1. Color: As available from the indoor resilient athletic surfacing manufacturer's standard range.
    a. Colors available: Solid Black or Solid Gray

C. Welding Rod: As supplied by the indoor resilient athletic surfacing manufacturer or supplier.
1. Color to blend with the indoor resilient athletic surfacing color or design.
2. All seams shall be welded to create a monolithic and impermeable surface.

D. Adhesive: As approved by the indoor resilient athletic surfacing manufacturer.

PART 3 - EXECUTION

3.1 *EXAMINATION*

A. It is the responsibility of the general contractor/construction manager to ensure that project/site conditions are acceptable for the installation of the indoor resilient athletic flooring.
B. Verify that the area in which the indoor resilient athletic surfacing will be installed is dry and weather tight. Verify that permanent heat, light and ventilation are installed and operable.
C. Verify that all other work that could cause damage, dirt and dust or interrupt the normal pace of the indoor resilient athletic flooring installation is completed or suspended.
D. Verify that there is a stable room temperature of at least 65◦F.
E. Verify that there are no foreign materials or objects on the subfloor and that the subfloor is clean and ready for installation.
F. *Concrete Subfloor: moisture content less than 85% RH when tested per ASTM F2170.*
G. Follow Fieldturf USA, Inc. installation recommendations.
H. Do not average the results of the tests. Report all field test results in writing to the General Contractor, Architect, and End User prior to installation.
I. Verify that the concrete subfloor surface pH level is within the 7 - 11 range.
J. Document the results confirming the slab is within manufacturer's tolerances for slab deviation.

3.2 *PREPARATION OF SURFACES*

A. Sand the entire surface of the concrete slab.
B. Sweep the concrete slab so as to remove all dirt and dust. If a sweeping compound is to be used it must be a sweeping compound that does not contain oil or other items that may inhibit the adhesive bond.
C. Slab must be dust free. In the event that dust impairs adhesive bond, priming the slab prior to application of adhesive may be necessary. Follow installation guidelines.
D. Follow OSHA guidelines.

3.3 *INSTALLATION*

A. The installation area shall be closed to all traffic and activity for a period to be set by the indoor resilient athletic surfacing installer. The indoor resilient athletic surfacing installation shall not begin until the installer is familiar with the existing conditions.
B. All necessary precautions should be taken to minimize noise, smell, dust, the use of hazardous materials and any other items that may inconvenience others.
C. Install the indoor resilient athletic surfacing in strict accordance with the indoor resilient athletic surfacing manufacturer's written instructions.
D. Install the indoor resilient athletic surfacing minimizing cross seams. Provide a seam diagram during the submittal process for approval prior to installation. Vinyl Sheet Flooring Seams: Comply with ASTM F 1516. Rout joints and heat weld to permanently and seamlessly fuse sections together.
E. Paint game lines using approved game line paint primer and game line paint in strict accordance with the game line paint manufacturer's instructions.
F. Install appropriate threshold plates or transition strips where necessary.

2.0 *CLEANING*

A. Remove all unused materials, tools, and equipment and dispose of any debris properly. Clean the indoor resilient athletic surfacing in accordance with the manufacturer's instructions.

3.6 *PROTECTION*

A. If required, protect the indoor resilient athletic surfacing from damage using coverings approved by the manufacturer until acceptance of work by the customer or their authorized representative.

3.7 *RELATED STANDARDS AND GUIDELINES*

A. ASTM F2170 "Standard Test Method for Determining Relative Humidity In Concrete Floor Slabs Using In-Situ Probes"
B. ASTM F710 "Standard Practice for Preparing Concrete Floors to Receive Resilient Flooring"
C. ACI 302.2R-06 "Guideline for Concrete Slabs that Receive Moisture-Sensitive Flooring Materials"
D. ASTM F2772-11 "Standard Specification for Athletic Performance Properties of Indoor Sports Floor Systems"

END OF SECTION

SECTION 09 65 66
ARCHITECTURAL SPECIFICATIONS FOR INDOOR RESILIENT ATHLETIC SURFACING

PART 1 – GENERAL

1.1 *SECTION INCLUDES*

A. Supply and installation of the indoor resilient multipurpose surfacing
B. Application of the game lines
C. References for the correct construction and preparation of concrete slabs to receive resilient flooring.

1.2 *SUBMITTALS*

A. Product Data:
   1. Manufacturer's promotional brochures, specifications and installation instructions
B. Manufacturer Certifications:
   1. Provide certification that accurately identifies the Original Equipment Manufacturer (OEM) of flooring furnished for this project including manufacturer's name, address and factory location.
   2. Suppliers of private label flooring for this project must identify themselves as such and fully disclose the OEM information listed above.
   3. All "manufacturer" requirements in these specifications must be complied with by the OEM, including warranties, certifications, qualifications, product data, test results, environmental requirements, performance data, etc.
C. Samples:
   1. Submit for selection and approval three (3) sets of the indoor resilient multipurpose surfacing, manufacturer's brochures, samples or sample boards of all of the available colors, textures and styles.
   2. Submit color samples of all the available game line paint colors for selection and approval.
D. Closeout Submittals:
   1. Submit three (3) copies of the indoor resilient multipurpose surfacing and manufacturer's maintenance instructions.
   2. Submit three (3) copies of the material and installation warranties as specified.

1.3 *QUALITY ASSURANCE*

A. Qualifications:
   1. The indoor resilient multipurpose surfacing shall have been actively marketed for a minimum of ten (10) years.
   2. The indoor resilient multipurpose surfacing shall be manufactured in an ISO 9001 certified plant.
   3. The indoor resilient multipurpose surfacing shall be manufactured in an ISO 14001 certified plant.
   4. The indoor resilient multipurpose surfacing supplier shall be an established firm, experienced in the field, and competent in the techniques required by the manufacturer.
   5. The installer of the indoor resilient multipurpose surfacing shall have a minimum of five (5) years of experience in the field installing indoor resilient multipurpose surfacing and have worked on at least five (5) projects of similar size, type and complexity.

B. Certifications:
   1. Installer to submit the indoor resilient athletic surfacing manufacturer's certification attesting that they are a trained installer of the indoor resilient multipurpose surfacing.
   2. The indoor resilient multipurpose surfacing manufacturer to submit official ISO 9001 certification for the facility in which the indoor resilient multipurpose surfacing is manufactured.

C. Testing:
   1. Tests shall be relative for multi-purpose use with certificates from independent testing resources to be made available upon request.
   2. Test results shall be no more than 5 years old and performed according to ASTM standard testing procedures.

1.4 *DELIVERY, STORAGE AND HANDLING*

A. Delivery:
   Material shall not be delivered until all related work is in place and finished and/or proper storage facilities and conditions can be provided and guaranteed stable according to FieldTurf USA, Inc. recommendations.

B. Storage:
   1. Store the material in a secure, clean and dry location.
   2. Maintain temperature between 55° and 85° Fahrenheit.
   3. Store the indoor resilient athletic surfacing rolls in an upright position on a smooth flat surface immediately upon delivery to jobsite.
   4. Rolls shipped in rigid protective cardboard containers can be laid horizontally prior to unpacking and installation.

1.5 *PROJECT/SITE CONDITIONS*

A. It is the responsibility of the general contractor/construction manager to maintain project/site conditions acceptable for the installation of the indoor resilient multipurpose flooring.

B. The area in which the indoor resilient multipurpose surfacing will be installed shall be dry and weather tight. Permanent heat, light and ventilation shall be installed and operable.

C. All other trades shall have completed their work prior to the installation of the resilient athletic flooring. The general contractor or construction manager shall maintain a secure and clean working environment before, during and after the installation.

D. Maintain a stable room temperature of at least 65°F for a minimum of one (1) week prior to, during and thereafter installation.

E. An effective low-permeance vapor barrier is placed directly beneath the concrete subfloor. For "on" or "below grade" installations, it is recommended to provide a permanent vapor barrier resistant to long term hydrostatic pressure/moisture exposure. Protrusions should be sealed to prevent moisture migration into the slab. Moisture should not be allowed to enter the slab after the completed construction.

F. Concrete subfloor surface pH level within the 7 to 11 range dependent upon installation type.

G. Concrete subfloor should be no greater than 1/8" within a 10 ft diameter. This tolerance can be measured in accordance with ASTM E1155. A specified (F_F) of 50 and an (F_L) of 30 should reach this degree of floor flatness and floor level. There is no numerical correlation between F numbers and the deviation from the straight

edge. However, the above specified numbers should achieve a flat floor with minimal deviation in the slab. Reference ACI 117 and ACI 302.1R. The general contractor should provide a certificate of compliance with the above recommendations.

H. Concrete subfloor must be clean and free of all foreign materials or objects including, but not limited to, curing compounds and sealers.

I. Fill cracks, grooves, voids, depressions, and other minor imperfections. Follow the manufacturer's directions. Moveable joints must be treated utilizing specific transitioning joint devices depending upon the architect's recommendations. Follow current ASTM F710 guidelines for the preparation of concrete slabs to receive resilient flooring.

J. Refer to ACI 302.2R "Guidelines for Concrete Slabs that Receive Moisture-Sensitive Flooring Materials" for concrete design and construction.

K. Concrete slab shall be fortified with continual steel reinforcement. Fiber reinforcement alone shall not be considered adequate fortification.

1.6 *WARRANTY*

A. Special Limited Warranty:
   1. Manufacturer's standard form in which manufacturer agrees to repair or replace sports flooring including labor that fails within specified warranty period.

B. Material warranty must be direct from the product manufacturer.
   1. Material warranties from separate or third party insurance providers are not valid.
   2. Material warranties must come from original manufacturer or division thereof. Private label warranties from distributors or brokers are not valid. Supply original point of manufacturing upon request.

C. Failures include, but are not limited to, the following:
   1. Material manufacturing defects.
   2. Surface wear and deterioration to the point of wear-through of wear layer per ASTM F410/ASTM F1303.
   3. Failure due to substrate moisture exposure exceeding 80 percent relative humidity when tested according to ASTM F2170.

D. Warranty Period:
   1. For material defects and surface wear-through: **10** years from date of substantial completion.

E. Installer's Limited Warranty:
   1. Installer's standard form in which installer agrees to repair or replace sports flooring that fails due to poor workmanship or faulty installation within the specified warranty period.
   2. Warranty Period: 2 years from date of substantial completion.

1.7 *ADDITIONAL MATERIALS*

A. Furnish to the owner additional materials containing a total of at least 1% of each different color or design of the indoor resilient athletic surfacing used on the project.

1.8 *LEED™ CERTIFICATION*

A. The indoor resilient athletic surfacing should be able to help this facility to achieve points towards *LEED™ certification.* Flooring system must be certified by FloorScore.
B. LEED categories positively affected by the indoor resilient athletic surfacing:

LEED™ V4 Credit		Contribution
Materials & Resources: Building Product Disclosure & Optimization (BPDO)		
MRc3: Sourcing of Raw Materials	Options 1 & 2	2 Points
MRc4: Material Ingredients	Option 1	1 Point
MRc5: Construction and Demolition Management	Reclamation and Recycling	ReStart® Program
Indoor Environmental Quality		
EQc2: Low-Emitting Materials	TVOC: 0.5 mg/m3 or less	FloorScore®

PART 2 - PRODUCTS

2.1 *MANUFACTURERS*

A. The basis of the design for the indoor resilient multipurpose surfacing is Dancefloor and Inspiration Pro system as manufactured by Tarkett.
B. All other installation accessories and related components must be either made or approved by the indoor resilient athletic surfacing manufacturer.
C. Other products may be approved as equal if deemed qualified and submitted in accordance with the General Conditions.
D. Test reports confirming compliance from an independent sports laboratory must be provided along with samples, technical data, installation, maintenance, and warranty prior to acceptance as an alternative product.

2.2 *MATERIALS*

A. Dancefloor - Prefabricated sport surface 3.5 mm with solid color design and slightly textured embossed surface as supplied by Tarkett.
   1. Surface shall be a satin/matte finish.
   2. The Inspiration Pro System shall incorporate Inspiration Pro double tongue and grooved multi-ply engineered panels, force reduction cushion, and appropriate vapor retarder.

B. Physical properties of the indoor resilient athletic surfacing shall conform to the following minimums:

Width	—	6′ 6″ (2 m)
Length	—	75′ (23m)) approx.
Wear Layer	EN 429	0.65 mm
Total Thickness	EN 428/EN 429	3.5 mm
Total Combined Thickness		1 3/8″ (34.2 mm approx.)
Wear Layer	Type 1– Grade 1	ASTM F1303/F410
Weight	EN 430	3.3kg/m² (0.72 lbs./sq. ft.)
Force Reduction	ASTM F2772	52% +/-
Slip Resistance	AS 4586	P3
Reaction to Fire	ISO AS 9239-1	8.6 kW/m²
Chemical Resistance	ISO 26987/EN 423	High
Dimensional Stability	ISO 23999/EN 434	≤0.10%
Abrasion Resistance	EN 660: Part 2	Group T: ≤ 2.0mm³
Static Load Limit	PASSED	ASTM F970- Load 175 Lbs.
Phthalate-free technology	—	YES
REACH Compliant	—	YES
Heavy Metals	—	NO
ISO 9001	—	YES
ISO 14001	—	YES

1. Color: As available from the indoor resilient athletic surfacing manufacturer's standard range.
    a. Colors available: Solid Black or Solid Gray

C. Welding Rod: As supplied by the indoor resilient athletic surfacing manufacturer or supplier.
1. Color to blend with the indoor resilient athletic surfacing color or design.
2. All seams shall be welded to create a monolithic and impermeable surface.

D. Adhesive: As approved by the indoor resilient athletic surfacing manufacturer.

PART 3 - EXECUTION

3.1 *EXAMINATION*

A. It is the responsibility of the general contractor/construction manager to ensure that project/site conditions are acceptable for the installation of the indoor resilient athletic flooring.
B. Verify that the area in which the indoor resilient athletic surfacing will be installed is dry and weather tight. Verify that permanent heat, light and ventilation are installed and operable.
C. Verify that all other work that could cause damage, dirt and dust or interrupt the normal pace of the indoor resilient athletic flooring installation is completed or suspended.
D. Verify that there is a stable room temperature of at least 65◦F.
E. Verify that there are no foreign materials or objects on the subfloor and that the subfloor is clean and ready for installation.
F. *Concrete Subfloor: moisture content less than 85% RH when tested per ASTM F2170.*
G. Follow Fieldturf USA, Inc. installation recommendations.
H. Do not average the results of the tests. Report all field test results in writing to the General Contractor, Architect, and End User prior to installation.
I. Verify that the concrete subfloor surface pH level is within the 7 - 11 range.
J. Document the results confirming the slab is within manufacturer's tolerances for slab deviation.

3.2 *PREPARATION OF SURFACES*

A. Sand the entire surface of the concrete slab.
B. Sweep the concrete slab so as to remove all dirt and dust. If a sweeping compound is to be used it must be a sweeping compound that does not contain oil or other items that may inhibit the adhesive bond.
C. Slab must be dust free. In the event that dust impairs adhesive bond, priming the slab prior to application of adhesive may be necessary. Follow installation guidelines.
D. Follow OSHA guidelines.

3.3 *INSTALLATION*

A. The installation area shall be closed to all traffic and activity for a period to be set by the indoor resilient athletic surfacing installer. The indoor resilient athletic surfacing installation shall not begin until the installer is familiar with the existing conditions.
B. All necessary precautions should be taken to minimize noise, smell, dust, the use of hazardous materials and any other items that may inconvenience others.
C. Install the indoor resilient athletic surfacing in strict accordance with the indoor resilient athletic surfacing manufacturer's written instructions.
D. Install the indoor resilient athletic surfacing minimizing cross seams. Provide a seam diagram during the submittal process for approval prior to installation. Vinyl Sheet Flooring Seams: Comply with ASTM F 1516. Rout joints and heat weld to permanently and seamlessly fuse sections together.
E. Paint game lines using approved game line paint primer and game line paint in strict accordance with the game line paint manufacturer's instructions.
F. Install appropriate threshold plates or transition strips where necessary.

2.0 *CLEANING*

A. Remove all unused materials, tools, and equipment and dispose of any debris properly. Clean the indoor resilient athletic surfacing in accordance with the manufacturer's instructions.

3.6 *PROTECTION*

A. If required, protect the indoor resilient athletic surfacing from damage using coverings approved by the manufacturer until acceptance of work by the customer or their authorized representative.

3.7 *RELATED STANDARDS AND GUIDELINES*

A. ASTM F2170 "Standard Test Method for Determining Relative Humidity In Concrete Floor Slabs Using In-Situ Probes"
B. ASTM F710 "Standard Practice for Preparing Concrete Floors to Receive Resilient Flooring"
C. ACI 302.2R-06 "Guideline for Concrete Slabs that Receive Moisture-Sensitive Flooring Materials"
D. ASTM F2772-11 "Standard Specification for Athletic Performance Properties of Indoor Sports Floor Systems"

END OF SECTION

SECTION 09 65 66
ARCHITECTURAL SPECIFICATIONS FOR INDOOR RESILIENT ATHLETIC SURFACING

PART 1 – GENERAL

1.1 *SECTION INCLUDES*

A. Supply and installation of the indoor resilient multipurpose surfacing
B. Application of the game lines
C. References for the correct construction and preparation of concrete slabs to receive resilient flooring.

1.2 *SUBMITTALS*

A. Product Data:
Manufacturer's promotional brochures, specifications and installation instructions

B. Manufacturer Certifications:
1. Provide certification that accurately identifies the Original Equipment Manufacturer (OEM) of flooring furnished for this project including manufacturer's name, address and factory location.
2. Suppliers of private label flooring for this project must identify themselves as such and fully disclose the OEM information listed above.
3. All "manufacturer" requirements in these specifications must be complied with by the OEM, including warranties, certifications, qualifications, product data, test results, environmental requirements, performance data, etc.

B. Samples:
1. Submit for selection and approval three (3) sets of the indoor resilient multipurpose surfacing, manufacturer's brochures, samples or sample boards of all of the available colors, textures and styles.
2. Submit color samples of all the available game line paint colors for selection and approval.

C. Closeout Submittals:
1. Submit three (3) copies of the indoor resilient multipurpose surfacing and manufacturer's maintenance instructions.
2. Submit three (3) copies of the material and installation warranties as specified.

1.3 *QUALITY ASSURANCE*

A. Qualifications:
1. The indoor resilient multipurpose surfacing shall have been actively marketed for a minimum of ten (10) years.
2. The indoor resilient multipurpose surfacing shall be manufactured in an ISO 9001 certified plant.

3. The indoor resilient multipurpose surfacing shall be manufactured in an ISO 14001 certified plant.
4. The indoor resilient multipurpose surfacing supplier shall be an established firm, experienced in the field, and appointed as a distributor by the manufacturer of the indoor resilient multipurpose surfacing.
5. The installer of the indoor resilient multipurpose surfacing shall have a minimum of five (5) years' experience in the field installing indoor resilient multipurpose surfacing and have worked on at least five (5) projects of similar size, type and complexity.

B. Certifications:
1. Installer to submit the indoor resilient athletic surfacing manufacturer's certification attesting that they are an approved installer of the indoor resilient multipurpose surfacing.
2. The indoor resilient multipurpose surfacing manufacturer to submit official ISO 9001 certification for the facility in which the indoor resilient multipurpose surfacing is manufactured.
3. The indoor resilient multipurpose surfacing manufacturer to submit official ISO 14001 certification for the facility in which the indoor resilient multipurpose surfacing is manufactured.

C. Testing:
Tests shall be relative for multi-purpose use with certificates from independent testing resources to be made available upon request. Test results shall be no more than 5 years old and performed according to ASTM standard testing procedures.

1.4 *DELIVERY, STORAGE AND HANDLING*

A. Delivery:
Material shall not be delivered until all related work is in place and finished and/or proper storage facilities and conditions can be provided and guaranteed stable according to FieldTurf USA, Inc. recommendations.

B. Storage:
Store the material in a secure, clean and dry location. Maintain temperature between 55◦ and 85◦ Fahrenheit. Store the indoor resilient athletic surfacing rolls in an upright position on a smooth flat surface immediately upon delivery to jobsite. Rolls shipped in rigid protective cardboard containers can be laid horizontally prior to unpacking and installation.

1.5 *PROJECT/SITE CONDITIONS*

A. It is the responsibility of the general contractor/construction manager to maintain project/site conditions acceptable for the installation of the indoor resilient multipurpose flooring.

B. The area in which the indoor resilient multipurpose surfacing will be installed shall be dry and weather tight. Permanent heat, light and ventilation shall be installed and operable.
C. All other trades shall have completed their work prior to the installation of
the resilient athletic flooring. The general contractor or Construction Manager shall maintain a secure and clean working environment before, during and after the installation. Suspension of other trades' work may be
authorized providing their work will not damage the new flooring.
D. Maintain a stable room temperature of at least 65◦F for a minimum of one (1) week prior to, during and thereafter installation.
E. An effective low-permeance vapor barrier is placed directly beneath the concrete subfloor. For "on" or "below grade" installations, it is recommended to provide a permanent vapor barrier resistant to long term hydrostatic pressure/moisture exposure. Protrusions should be sealed to prevent moisture migration into the slab. Moisture should not be allowed to enter the slab after the completed construction.
F. Concrete subfloor surface pH level within the 7 to 10 range dependent upon installation type.
G. Concrete subfloor should be no greater than 1/8" within a 10 ft diameter. This tolerance can be measured in accordance with ASTM E1155.
A specified (F_F) of 50 and an (F_L) of 30 should reach this degree of floor flatness and floor level. There is no numerical correlation between F numbers and the deviation from the straight edge; however the above specified numbers should achieve a flat floor with minimal deviation in the slab. Reference ACI 117 and ACI 302.1R. The general contractor should provide a certificate of compliance with the above recommendations.
H. Concrete subfloor must be clean and free of all foreign materials or objects including, but not limited to, curing compounds and sealers.
I. Fill cracks, grooves, voids, depressions, and other minor imperfections. Follow the manufacturer's directions. Moveable joints must be treated utilizing specific liquid treatments designed for use with expansion/contraction joints. Standard cementitious floor patching compounds shall not be used for treating moving joints. (see ASTM F710)
J. Refer to ACI 302.2R "Guidelines for Concrete Slabs that Receive Moisture-Sensitive Flooring Materials" for concrete design and construction.
K. Concrete slab shall be fortified with continual steel reinforcement. Fiber reinforcement alone shall not be considered adequate fortification.

1.6 *WARRANTY*

A. Materials:

The indoor resilient multipurpose surfacing shall be covered by the manufacturer against product defects for 10 years. The manufacturer of the indoor resilient multipurpose surfacing must provide this warranty upon request. Warranties shall not be prorated during the life of the warranty period.

1.7 *ADDITIONAL MATERIALS*

Furnish to the owner additional materials containing a total of at least 1% of each different color or design of the indoor resilient athletic surfacing used on the project.

1.8 *LEED™ CERTIFICATION*

The indoor resilient athletic surfacing should be able to help this facility to achieve points towards *LEED™ certification.* Flooring system must be certified by Floor Score.

LEED categories positively affected by the indoor resilient athletic surfacing:

Product Type			Vinyl
Building Reuse Maintain Interior Nonstructural Elements	MR 1.2	Renovation	1
Construction Waste Management	MR 2	Renovation	2
Construction Waste Management Materials Reuse	MR 3 5 % - 1 point 10% - 2 points	Renovation	2
Recycled Content	MR 4 20% - 2 points	New/Renovation	2
Indoor Environmental Air Quality Low VOC Adhesives/Sealants	IEQ 4.1	New/Renovation	1
Low-emitting Materials Paints and Coatings	IEQ 4.2	New/Renovation	1
Low-Emitting Materials Flooring Systems	IEQ 4.3	New/Renovation	1

PART 2 - PRODUCTS

2.1 *MANUFACTURERS*

The basis of the design for the indoor resilient multipurpose surfacing is Omnisports Compact and Lumaflex System as manufactured by FieldTurf USA, Inc. All other installation accessories and related components must be either made or approved by the indoor resilient athletic surfacing

manufacturer. Other products may be approved as equal if deemed qualified and submitted in accordance with the General Conditions. Test reports confirming compliance from an Independent Sports Laboratory must be provided along with samples, technical data, installation, maintenance, and warranty prior to acceptance as an alternative product.

2.2 *MATERIALS*.

LinoSport - Prefabricated 2.5 mm linoleum surfacing with marbled design and slightly textured surface as supplied by FieldTurf USA, Inc. Product to be naturally bacteriostatic and will not contribute to the proliferation of bacteria or fungus. The material's surface shall be protected with XF® X-treme performance finish or equivalent for ease of maintenance. Floor covering requiring waxes or other restorative treatments shall not be considered. Welding rod shall also incorporate the XF® X-treme finish or equivalent.
The Lumaflex System shall incorporate Lumaflex double tongue and grooved multi-ply engineered panels, force reduction cushion, and appropriate vapor retarder. Physical properties of the indoor athletic system shall conform to the following minimums:

LinoSport Width	.....	6'6" (2 m)
Length	.....	Varies
LinoSport Thickness	.....	2.5 mm
Total Combination Thickness	.....	1.063" (27 mm approx.)
LinoSport Environmental	.....	Floor Score Certified
Ball Rebound	PASSED	ASTM F2772 > 90%
Surface Finish Effect	PASSED	ASTM F2772
Vertical Deformation	PASSED	ASTM F2772
Shock Absorption	PASSED	ASTM F2772 Class 4
LinoSport Fire Rating	PASSED	Class 1 (ASTM E648)

1. Color: As available from the indoor resilient athletic surfacing manufacturer's standard range.

B. Welding Rod:
As supplied by the indoor resilient athletic surfacing manufacturer or supplier. Color to blend with the indoor resilient athletic surfacing color or design. All seams shall be welded to create a monolithic and impermeable surface.

C. Adhesive:
As approved by the indoor resilient athletic surfacing manufacturer.

D. Game Line Paint Primer:
As approved by the indoor resilient athletic surfacing manufacturer.

E. Game Line Paint:
As approved by the indoor resilient athletic surfacing manufacturer. Colors are to be selected from the manufacturer's standard range.

PART 3 - EXECUTION

3.1 *EXAMINATION*

A. It is the responsibility of the general contractor/construction manager to ensure that project/site conditions are acceptable for the installation of the indoor resilient athletic flooring.
B. Verify that the area in which the indoor resilient athletic surfacing will be installed is dry and weather tight. Verify that permanent heat, light and ventilation is installed and operable.
C. Verify that all other work that could cause damage, dirt and dust or interrupt the normal pace of the indoor resilient athletic flooring installation is completed or suspended.
D. Verify that there is a stable room temperature of at least 65◦F.
E. Verify that there are no foreign materials or objects on the subfloor and that the subfloor is clean and ready for installation.
F. Concrete moisture content less than 85 % RH when tested per ASTM F2170.
G. Document the results indicating the slab is within manufacturer's tolerances for slab deviation.

3.2 *PREPARATION OF SURFACES*

A. Sand the entire surface of the concrete slab.
B. Sweep the concrete slab so as to remove all dirt and dust. If a sweeping compound is to be used it must be a sweeping compound that does not contain oil or other items that may inhibit the adhesive bond.
C. Slab must be dust free. In the event that dust impairs adhesive bond, priming the slab prior to application of adhesive may be necessary. Follow installation guidelines.

3.3 *INSTALLATION*

A. The installation area shall be closed to all traffic and activity for a period to be set by the indoor resilient athletic surfacing installer. The indoor resilient athletic surfacing installation shall not begin until the installer is familiar with the existing conditions.
B. All necessary precautions should be taken to minimize noise, smell, dust, the use of hazardous materials and any other items that may inconvenience others.

C. Install the indoor resilient athletic surfacing in strict accordance with the indoor resilient athletic surfacing manufacturer's written instructions.
D. Install the indoor resilient athletic surfacing minimizing cross seams. Provide
a seam diagram during the submittal process for approval prior to installation.
E. Paint game lines using approved game line paint primer and game line paint in strict accordance with the game line paint manufacturer's instructions.
F. Install appropriate threshold plates or transition strips where necessary.

3.4 *CLEANING*

A. Remove all unused materials, tools, and equipment and dispose of any debris properly. Clean the indoor resilient athletic surfacing in accordance with the manufacturer's instructions.

3.5 *PROTECTION*

If required, protect the indoor resilient athletic surfacing from damage using coverings approved by the manufacturer until acceptance of work by the customer or their authorized representative.

3.7 *RELATED STANDARDS AND GUIDELINES*

A. ASTM F2170 "Standard Test Method for Determining Relative Humidity
In Concrete Floor Slabs Using In-Situ Probes"
B. ASTM F710 "Standard Practice for Preparing Concrete Floors to Receive
Resilient Flooring"
C. ACI 302.2R-06 "Guideline for Concrete Slabs that Receive Moisture-Sensitive
Flooring Materials"

END OF SECTION

SECTION 09645
ARCHITECTURAL SPECIFICATIONS FOR INDOOR RESILIENT SURFACING

PART 1 – GENERAL

1.1 *SECTION INCLUDES*

A. Supply and installation of the indoor resilient multipurpose surfacing
B. Application of the game lines
C. References for the correct construction and preparation of concrete slabs to receive resilient flooring.

1.2 *SUBMITTALS*

A. Product Data:
Manufacturer's promotional brochures, specifications and installation instructions

B. Manufacturer Certifications:
1. Provide certification that accurately identifies the Original Equipment Manufacturer (OEM) of flooring furnished for this project including manufacturer's name, address and factory location.
2. Suppliers of private label flooring for this project must identify themselves as such and fully disclose the OEM information listed above.
3. All "manufacturer" requirements in these specifications must be complied with by the OEM, including warranties, certifications, qualifications, product data, test results, environmental requirements, performance data, etc.

B. Samples:
1. Submit for selection and approval three (3) sets of the indoor resilient multipurpose surfacing, manufacturer's brochures, samples or sample boards of all of the available colors, textures and styles.
2. Submit color samples of all the available game line paint colors for selection and approval.

C. Closeout Submittals:
1. Submit three (3) copies of the indoor resilient multipurpose surfacing and manufacturer's maintenance instructions.
2. Submit three (3) copies of the material and installation warranties as specified.

1.3 *QUALITY ASSURANCE*

A. Qualifications:

1. The indoor resilient multipurpose surfacing shall be manufactured in an ISO 9001 certified plant.
2. The indoor resilient multipurpose surfacing shall be manufactured in an ISO 14001 certified plant.
3. The indoor resilient multipurpose surfacing supplier shall be an established firm experienced in the field and appointed as a distributor by the manufacturer of the indoor resilient multipurpose surfacing.

4. The installer of the indoor resilient multipurpose surfacing shall have a minimum of five (5) years experience in the field installing indoor resilient multipurpose surfacing and have worked on at least five (5) projects of similar size and complexity.

B. Certifications:
1. Installer to submit the indoor resilient surfacing manufacturer's or distributor's certification attesting that they are an approved installer of the indoor resilient multipurpose surfacing.
2. The indoor resilient multipurpose surfacing manufacturer to submit official ISO 9001 certification for the facility in which the indoor resilient multipurpose surfacing is manufactured.
3. The indoor resilient multipurpose surfacing manufacturer to submit official ISO 14001 certification for the facility in which the indoor resilient multipurpose surfacing is manufactured.

C. Testing:
Tests shall be relative for multi-purpose use with certificates from independent testing resources to be made available upon request. Test results shall be no more than 5 years old and performed according to ASTM and/or EN standard testing procedures.

1.4 *DELIVERY, STORAGE AND HANDLING*

A. Delivery:
Material shall not be delivered until all related work is in place and finished and/or proper storage facilities and conditions can be provided and guaranteed stable according to the manufacturer's recommendations.

1.5 *PROJECT/SITE CONDITIONS*

A. It is the responsibility of the general contractor/construction manager to maintain project/site conditions acceptable for the installation of the indoor resilient multipurpose flooring.
B. The area in which the indoor resilient multipurpose surfacing will be installed shall be dry and weather tight. Permanent heat, light and ventilation shall be installed and operable.
C. All other trades shall have completed their work prior to the installation of the resilient multipurpose flooring. The general contractor or Construction Manager shall maintain a secure and clean working environment before, during and after the installation. Suspension of other trades' work may be authorized providing their work will not damage the new flooring.
D. Maintain a stable room temperature of at least 65°F for a minimum of one (1) week prior to, during, and thereafter installation.
E. An effective low-permeance vapor barrier is placed directly beneath the concrete subfloor. For "on" or "below grade" installations, it is recommended to provide a permanent vapor barrier resistant to long term hydrostatic pressure/moisture exposure. Protrusions should be sealed to prevent moisture migration into the slab. Moisture should not be allowed to enter the slab after the completed construction.

F. Concrete subfloor surface pH level within the 7 to 10 range dependent upon installation type.
G. Concrete subfloor should be no greater than 1/8" within a 10 ft diameter. This tolerance can be measured in accordance with ASTM E1155.
A specified (F_F) of 50 and an (F_L) of 30 should reach this degree of floor flatness and floor level. There is no numerical correlation between F numbers and the deviation from the straight edge; however the above specified numbers should achieve a flat floor with minimal deviation in the slab. Reference ACI 117 and ACI 302.1R. The general contractor should provide a certificate of compliance with the above recommendations.
H. Concrete subfloor must be clean and free of all foreign materials or objects including, but not limited to, curing compounds and sealers.
I. Fill cracks, grooves, voids, depressions, and other minor imperfections with Ardex (or equal) cement-based patching/leveling compounds. Follow the manufacturer's directions. Moveable joints must be treated utilizing specific transitioning joint devices depending upon the architect's recommendations. Follow current ASTM F710 guidelines for the preparation of concrete slabs to receive resilient flooring.
J. Refer to ACI 302.2R "Guidelines for Concrete Slabs that Receive Moisture-Sensitive Flooring Materials" for concrete design and construction.
K. Concrete slab shall be fortified with continual steel reinforcement. Fiber reinforcement alone shall not be considered adequate fortification.

1.6 *WARRANTY*

A. Materials:
The indoor resilient multipurpose surfacing shall be covered by the manufacturer against product defects for 10 years. The manufacturer of the indoor resilient multipurpose surfacing must provide this warranty upon request.
B. Installation:
The installation of the indoor resilient multipurpose surfacing shall be covered against poor workmanship and faulty installation by a two (2) year written, limited warranty provided by the contractor performing/overseeing the installation.

1.7 *ADDITIONAL MATERIALS*

Furnish to the owner additional materials containing a total of at least 1% of each different color or design of the indoor resilient multipurpose surfacing used on the project.

1.8 *LEED™ CERTIFICATION*

The indoor resilient athletic surfacing should be able to help this facility to achieve points towards *LEED*™ certification. Flooring system must be certified by FloorScore.

Product Type			Linoleum Flooring
Building Reuse Maintain Interior Nonstructural Elements	MR 1.2	Renovation	1
Construction Waste Management	MR 2	Renovation	2
Recycled Content	MR 4 20% - 2 points	New/Renovation	2
Materials and Resources Rapidly Renewable Materials	MR 6	New/Renovation	1
Indoor Environmental Air Quality Low VOC Adhesives/Sealants	IEQ 4.1	New/Renovation	1
Low-emitting Materials Paints and Coatings	IEQ 4.2	New/Renovation	1
Low-Emitting Materials Flooring Systems	IEQ 4.3	New/Renovation	1

PART 2 - PRODUCTS

2.1 *MANUFACTURERS*

The basis of the design for the indoor resilient multipurpose surfacing is LinoSport as manufactured by FieldTurf, USA, Inc. All other installation accessories and related components must be either made or approved by the indoor resilient surfacing manufacturer. Other products may be approved as equal if deemed qualified and submitted in accordance with the General Conditions..

2.2 *MATERIALS.*

LinoSport - Prefabricated 2.5 mm linoleum surfacing with marbled design and slightly textured surface as supplied by FieldTurf USA, Inc. Product to be naturally bacteriostatic and will not contribute to the proliferation of bacteria or fungus. The material's surface shall be protected with XF® X-treme performance finish or equivalent for ease of maintenance. Floor covering requiring waxes or other restorative treatments shall not be considered. Welding rod shall also incorporate the XF® X-treme finish or equivalent.

1. Physical properties of the indoor resilient surfacing shall conform to the following minimums:

Width	…….	6'6" (2 m)
Length	…….	85' (25.9m) approx.
Total Thickness	…….	2.5 mm
Vertical Deformation	PASSED	0.6 (EN 14809)
Rolling Load	PASSED	0.30 (EN 1569 {11/1999})
Friction	PASSED	83 (EN 13036-4)
Sanitization	Excellent	Naturally Bacteriostatic
Sound Insulation	Excellent	+/= 9 dB (ISO 717/2)
Recycled Content	…….	22%

A. Welding Rod:

As supplied by the indoor resilient surfacing manufacturer or supplier. Color to blend with the indoor resilient surfacing color or design. All seams

shall be heat welded. Welding rod shall also incorporate the XF® X-treme finish or equivalent.

B. Adhesive:
Multi-Poxy adhesive. Follow adhesive manufacturer's recommendations.

C. Game Line Paint Primer:
As approved by the indoor resilient surfacing manufacturer.

D. Color: As available from the indoor resilient surfacing manufacturer's standard range.

PART 3 - EXECUTION

3.1 *EXAMINATION*

A. It is the responsibility of the general contractor/construction manager to ensure that project/site conditions are acceptable for the installation of the indoor resilient flooring.

B. Verify that the area in which the indoor resilient surfacing will be installed is dry and weather tight. Verify that permanent heat, light and ventilation is installed and operable.

C. Verify that all other work that could cause damage, dirt and dust or interrupt the normal pace of the indoor resilient flooring installation is completed or suspended.

D. Verify that there is a stable room temperature of at least 65°F.

E. Verify that there are no foreign materials or objects on the subfloor and that the subfloor is clean and ready for installation.

F. *Direct Full Spread Adhering to Concrete Subfloor* ***Multi-Poxy Adhesive****:*
moisture content less 92 % RH when tested per ASTM F2170.

G. Do not average the results of the tests. Report all field test results in writing to the General Contractor, Architect, and End User prior to installation.

H. Verify that the concrete subfloor surface pH level is within the 7 - 10 range.

I. Document the results indicating the slab is within manufacturer's tolerances for slab deviation.

3.2 *PREPARATION OF SURFACES*

A. Sand the entire surface of the concrete slab.

B. Sweep the concrete slab so as to remove all dirt and dust. If a sweeping compound is to be used it must be a sweeping compound that does not contain oil or other items that may inhibit the adhesive bond.

C. Slab must be dust free. In the event that dust impairs adhesive bond, priming the slab prior to application of adhesive may be necessary. Follow installation guidelines.

3.3 *INSTALLATION*

A. The installation area shall be closed to all traffic and activity for a period to be set by the indoor resilient surfacing installer. The indoor resilient

surfacing installation shall not begin until the installer is familiar with the existing conditions.

B. All necessary precautions should be taken to minimize noise, smell, dust, the use of hazardous materials and any other items that may inconvenience others.
C. Install the indoor resilient surfacing in strict accordance with the indoor resilient surfacing manufacturer's written instructions.
D. Install the indoor resilient surfacing minimizing cross seams. Provide a seam diagram during the submittal process for approval prior to installation.
E. Paint game lines using approved game line paint primer and game line paint in strict accordance with the game line paint manufacturer's instructions.
F. Install appropriate threshold plates or transition strips where necessary.

3.5 *CLEANING*

A. Remove all unused materials, tools, and equipment and dispose of any debris properly. Clean the indoor resilient surfacing in accordance with the manufacturer's instructions.

3.6 *PROTECTION*

If required, protect the indoor resilient surfacing from damage using coverings approved by the manufacturer until acceptance of work by the customer or their authorized representative.

3.7 *RELATED STANDARDS AND GUIDELINES*

A. ASTM F2170 "Standard Test Method for Determining Relative Humidity In Concrete Floor Slabs Using In-Situ Probes"
B. ASTM F710 "Standard Practice for Preparing Concrete Floors to Receive Resilient Flooring"
C. ACI 302.2R-06 "Guideline for Concrete Slabs that Receive Moisture-Sensitive Flooring Materials"

END OF SECTION

SECTION 09 65 66
ARCHITECTURAL SPECIFICATIONS FOR INDOOR RESILIENT ATHLETIC SURFACING

PART 1 – GENERAL

1.1 *SECTION INCLUDES*

A. Supply and installation of the indoor resilient multipurpose surfacing
B. Application of the game lines
C. References for the correct construction and preparation of concrete slabs to receive resilient flooring.

1.2 *SUBMITTALS*

A. Product Data:
Manufacturer's promotional brochures, specifications and installation instructions

B. Manufacturer Certifications:
1. Provide certification that accurately identifies the Original Equipment Manufacturer (OEM) of flooring furnished for this project including manufacturer's name, address and factory location.
2. Suppliers of private label flooring for this project must identify themselves as such and fully disclose the OEM information listed above.
3. All "manufacturer" requirements in these specifications must be complied with by the OEM, including warranties, certifications, qualifications, product data, test results, environmental requirements, performance data, etc.

B. Samples:
1. Submit for selection and approval three (3) sets of the indoor resilient multipurpose surfacing, manufacturer's brochures, samples or sample boards of all of the available colors, textures and styles.
2. Submit color samples of all the available game line paint colors for selection and approval.

C. Closeout Submittals:
1. Submit three (3) copies of the indoor resilient multipurpose surfacing and manufacturer's maintenance instructions.
2. Submit three (3) copies of the material and installation warranties as specified.

1.3 *QUALITY ASSURANCE*

A. Qualifications:
1. The indoor resilient multipurpose surfacing shall have been actively marketed for a minimum of ten (10) years.
2. The indoor resilient multipurpose surfacing shall be manufactured in an ISO 9001 certified plant.

3. The indoor resilient multipurpose surfacing shall be manufactured in an ISO 14001 certified plant.
4. The indoor resilient multipurpose surfacing supplier shall be an established firm, experienced in the field, and appointed as a distributor by the manufacturer of the indoor resilient multipurpose surfacing.
5. The installer of the indoor resilient multipurpose surfacing shall have a minimum of five (5) years' experience in the field installing indoor resilient multipurpose surfacing and have worked on at least five (5) projects of similar size, type and complexity.

B. Certifications:
1. Installer to submit the indoor resilient athletic surfacing manufacturer's certification attesting that they are an approved installer of the indoor resilient multipurpose surfacing.
2. The indoor resilient multipurpose surfacing manufacturer to submit official ISO 9001 certification for the facility in which the indoor resilient multipurpose surfacing is manufactured.
3. The indoor resilient multipurpose surfacing manufacturer to submit official ISO 14001 certification for the facility in which the indoor resilient multipurpose surfacing is manufactured.

C. Testing:
Tests shall be relative for multi-purpose use with certificates from independent testing resources to be made available upon request. Test results shall be no more than 5 years old and performed according to ASTM standard testing procedures.

1.4 *DELIVERY, STORAGE AND HANDLING*

A. Delivery:
Material shall not be delivered until all related work is in place and finished and/or proper storage facilities and conditions can be provided and guaranteed stable according to FieldTurf USA, Inc. recommendations.

B. Storage:
Store the material in a secure, clean and dry location. Maintain temperature between 55◦ and 85◦ Fahrenheit. Store the indoor resilient athletic surfacing rolls in an upright position on a smooth flat surface immediately upon delivery to jobsite. Rolls shipped in rigid protective cardboard containers can be laid horizontally prior to unpacking and installation.

1.5 *PROJECT/SITE CONDITIONS*

A. It is the responsibility of the general contractor/construction manager to maintain project/site conditions acceptable for the installation of the indoor resilient multipurpose flooring.

B. The area in which the indoor resilient multipurpose surfacing will be installed shall be dry and weather tight. Permanent heat, light and ventilation shall be installed and operable.
C. All other trades shall have completed their work prior to the installation of
the resilient athletic flooring. The general contractor or Construction Manager shall maintain a secure and clean working environment before, during and after the installation. Suspension of other trades' work may be
authorized providing their work will not damage the new flooring.
D. Maintain a stable room temperature of at least 65◦F for a minimum of one (1) week prior to, during and thereafter installation.
E. An effective low-permeance vapor barrier is placed directly beneath the concrete subfloor. For "on" or "below grade" installations, it is recommended to provide a permanent vapor barrier resistant to long term hydrostatic pressure/moisture exposure. Protrusions should be sealed to prevent moisture migration into the slab. Moisture should not be allowed to enter the slab after the completed construction.
F. Concrete subfloor surface pH level within the 7 to 10 range dependent upon installation type.
G. Concrete subfloor should be no greater than 1/8" within a 10 ft diameter. This tolerance can be measured in accordance with ASTM E1155.
A specified (F_F) of 50 and an (F_L) of 30 should reach this degree of floor flatness and floor level. There is no numerical correlation between F numbers and the deviation from the straight edge; however the above specified numbers should achieve a flat floor with minimal deviation in the slab. Reference ACI 117 and ACI 302.1R. The general contractor should provide a certificate of compliance with the above recommendations.
H. Concrete subfloor must be clean and free of all foreign materials or objects including, but not limited to, curing compounds and sealers.
I. Fill cracks, grooves, voids, depressions, and other minor imperfections. Follow the manufacturer's directions. Moveable joints must be treated utilizing specific liquid treatments designed for use with expansion/contraction joints. Standard cementitious floor patching compounds shall not be used for treating moving joints. (see ASTM F710)
J. Refer to ACI 302.2R "Guidelines for Concrete Slabs that Receive Moisture-Sensitive Flooring Materials" for concrete design and construction.
K. Concrete slab shall be fortified with continual steel reinforcement. Fiber reinforcement alone shall not be considered adequate fortification.

1.6 *WARRANTY*

A. Materials:

B. The indoor resilient multipurpose surfacing shall be covered by the manufacturer against product defects for 10 years. The manufacturer of the indoor resilient multipurpose surfacing must provide this warranty upon request. Warranties shall not be prorated during the life of the warranty period.

1.7 *ADDITIONAL MATERIALS*

Furnish to the owner additional materials containing a total of at least 1% of each different color or design of the indoor resilient athletic surfacing used on the project.

1.8 *LEED™ CERTIFICATION*

The indoor resilient athletic surfacing should be able to help this facility to achieve points towards *LEED™ certification.* Flooring system must be certified by Floor Score.

LEED categories positively affected by the indoor resilient athletic surfacing:

Product Type			Vinyl
Building Reuse Maintain Interior Nonstructural Elements	**MR 1.2**	Renovation	1
Construction Waste Management	**MR 2**	Renovation	2
Construction Waste Management Materials Reuse	**MR 3**	Renovation	2
	5 % - 1 point		
	10% - 2 points		
Recycled Content	**MR 4**	New/Renovation	2
	20% - 2 points		
Indoor Environmental Air Quality Low VOC Adhesives/Sealants	**IEQ 4.1**	New/Renovation	1
Low-emitting Materials Paints and Coatings	**IEQ 4.2**	New/Renovation	1
Low-Emitting Materials Flooring Systems	**IEQ 4.3**	New/Renovation	1

PART 2 - PRODUCTS

2.1 *MANUFACTURERS*

The basis of the design for the indoor resilient multipurpose surfacing is Omnisports Compact and Lumaflex Elite System as manufactured by FieldTurf USA, Inc. All other installation accessories and related components must be either made or approved by the indoor resilient

athletic surfacing manufacturer. Other products may be approved as equal if deemed qualified and submitted in accordance with the General Conditions. Test reports confirming compliance from an Independent Sports Laboratory must be provided along with samples, technical data, installation, maintenance, and warranty prior to acceptance as an alternative product.

2.2 *MATERIALS*.

LinoSport- Prefabricated 2.5 mm linoleum surfacing with marbled design and slightly textured surface as supplied by FieldTurf USA, Inc. Product to be naturally bacteriostatic and will not contribute to the proliferation of bacteria or fungus. The material's surface shall be protected with XF® X-treme performance finish or equivalent for ease of maintenance. Floor covering requiring waxes or other restorative treatments shall not be considered. Welding rod shall also incorporate the XF® X-treme finish or equivalent.
The Lumaflex Elite System shall incorporate Lumaflex Elite double tongue and grooved multi-ply engineered panels, force reduction cushion, and appropriate vapor retarder. Physical properties of the indoor athletic system shall conform to the following minimums:

LinoSport Width	.....	6'6" (2 m)
Length	.....	Varies
LinoSport Thickness	.....	2.5 mm
Total Combination Thickness	.....	1.063" (27mm approx.)
LinoSport Environmental	.....	Floor Score Certified
Ball Rebound	PASSED	ASTM F2772 > 90%
Surface Finish Effect	PASSED	ASTM F2772
Vertical Deformation	PASSED	ASTM F2772
Shock Absorption	PASSED	ASTM F2772 Class 5
LinoSport Fire Rating	PASSED	Class 1 (ASTM E648)

1. Color: As available from the indoor resilient athletic surfacing manufacturer's standard range.

B. Welding Rod:
As supplied by the indoor resilient athletic surfacing manufacturer or supplier. Color to blend with the indoor resilient athletic surfacing color or design. All seams shall be welded to create a monolithic and impermeable surface.

C. Adhesive:
As approved by the indoor resilient athletic surfacing manufacturer.

D. Game Line Paint Primer:

As approved by the indoor resilient athletic surfacing manufacturer.

E. Game Line Paint:
As approved by the indoor resilient athletic surfacing manufacturer. Colors are to be selected from the manufacturer's standard range.

PART 3 - EXECUTION

3.1 *EXAMINATION*

A. It is the responsibility of the general contractor/construction manager to ensure that project/site conditions are acceptable for the installation of the indoor resilient athletic flooring.
B. Verify that the area in which the indoor resilient athletic surfacing will be installed is dry and weather tight. Verify that permanent heat, light and ventilation is installed and operable.
C. Verify that all other work that could cause damage, dirt and dust or interrupt the normal pace of the indoor resilient athletic flooring installation is completed or suspended.
D. Verify that there is a stable room temperature of at least 65◦F.
E. Verify that there are no foreign materials or objects on the subfloor and that the subfloor is clean and ready for installation.
F. Concrete moisture content less than 85 % RH when tested per ASTM F2170.
G. Document the results indicating the slab is within manufacturer's tolerances for slab deviation.

3.2 *PREPARATION OF SURFACES*

A. Sand the entire surface of the concrete slab.
B. Sweep the concrete slab so as to remove all dirt and dust. If a sweeping compound is to be used it must be a sweeping compound that does not contain oil or other items that may inhibit the adhesive bond.
C. Slab must be dust free. In the event that dust impairs adhesive bond, priming the slab prior to application of adhesive may be necessary. Follow installation guidelines.

3.3 *INSTALLATION*

A. The installation area shall be closed to all traffic and activity for a period to be set by the indoor resilient athletic surfacing installer. The indoor resilient athletic surfacing installation shall not begin until the installer is familiar with the existing conditions.
B. All necessary precautions should be taken to minimize noise, smell, dust, the use of hazardous materials and any other items that may inconvenience others.

C. Install the indoor resilient athletic surfacing in strict accordance with the indoor resilient athletic surfacing manufacturer's written instructions.
D. Install the indoor resilient athletic surfacing minimizing cross seams. Provide
a seam diagram during the submittal process for approval prior to installation.
E. Paint game lines using approved game line paint primer and game line paint in strict accordance with the game line paint manufacturer's instructions.
F. Install appropriate threshold plates or transition strips where necessary.

3.4 *CLEANING*

A. Remove all unused materials, tools, and equipment and dispose of any debris properly. Clean the indoor resilient athletic surfacing in accordance with the manufacturer's instructions.

3.5 *PROTECTION*

If required, protect the indoor resilient athletic surfacing from damage using coverings approved by the manufacturer until acceptance of work by the customer or their authorized representative.

3.7 *RELATED STANDARDS AND GUIDELINES*

A. ASTM F2170 "Standard Test Method for Determining Relative Humidity
In Concrete Floor Slabs Using In-Situ Probes"
B. ASTM F710 "Standard Practice for Preparing Concrete Floors to Receive
Resilient Flooring"
C. ACI 302.2R-06 "Guideline for Concrete Slabs that Receive Moisture-Sensitive
Flooring Materials"

END OF SECTION

SECTION 09645
ARCHITECTURAL SPECIFICATIONS FOR INDOOR RESILIENT SURFACING

PART 1 – GENERAL

1.1 *SECTION INCLUDES*

A. Supply and installation of the indoor resilient multipurpose surfacing
B. Application of the game lines
C. References for the correct construction and preparation of concrete slabs to receive resilient flooring.

1.2 *SUBMITTALS*

A. Product Data:
Manufacturer's promotional brochures, specifications and installation instructions

B. Manufacturer Certifications:
1. Provide certification that accurately identifies the Original Equipment Manufacturer (OEM) of flooring furnished for this project including manufacturer's name, address and factory location.
2. Suppliers of private label flooring for this project must identify themselves as such and fully disclose the OEM information listed above.
3. All "manufacturer" requirements in these specifications must be complied with by the OEM, including warranties, certifications, qualifications, product data, test results, environmental requirements, performance data, etc.

B. Samples:
1. Submit for selection and approval three (3) sets of the indoor resilient multipurpose surfacing, manufacturer's brochures, samples or sample boards of all of the available colors, textures and styles.
2. Submit color samples of all the available game line paint colors for selection and approval.

C. Closeout Submittals:
1. Submit three (3) copies of the indoor resilient multipurpose surfacing and manufacturer's maintenance instructions.
2. Submit three (3) copies of the material and installation warranties as specified.

1.3 *QUALITY ASSURANCE*

A. Qualifications:

1. The indoor resilient multipurpose surfacing shall be manufactured in an ISO 9001 certified plant.
2. The indoor resilient multipurpose surfacing shall be manufactured in an ISO 14001 certified plant.
3. The indoor resilient multipurpose surfacing supplier shall be an established firm experienced in the field and appointed as a distributor by the manufacturer of the indoor resilient multipurpose surfacing.
4. The installer of the indoor resilient multipurpose surfacing shall have a minimum of five (5) years experience in the field installing indoor

resilient multipurpose surfacing and have worked on at least five (5) projects of similar size and complexity.

B. Certifications:
   1. Installer to submit the indoor resilient surfacing manufacturer's or distributor's certification attesting that they are an approved installer of the indoor resilient multipurpose surfacing.
   2. The indoor resilient multipurpose surfacing manufacturer to submit official ISO 9001 certification for the facility in which the indoor resilient multipurpose surfacing is manufactured.
   3. The indoor resilient multipurpose surfacing manufacturer to submit official ISO 14001 certification for the facility in which the indoor resilient multipurpose surfacing is manufactured.

C. Testing:
   Tests shall be relative for multi-purpose use with certificates from independent testing resources to be made available upon request. Test results shall be no more than 5 years old and performed according to ASTM and/or EN standard testing procedures.

1.4 *DELIVERY, STORAGE AND HANDLING*

A. Delivery:
   Material shall not be delivered until all related work is in place and finished and/or proper storage facilities and conditions can be provided and guaranteed stable according to the manufacturer's recommendations.

1.5 *PROJECT/SITE CONDITIONS*

A. It is the responsibility of the general contractor/construction manager to maintain project/site conditions acceptable for the installation of the indoor resilient multipurpose flooring.
B. The area in which the indoor resilient multipurpose surfacing will be installed shall be dry and weather tight. Permanent heat, light and ventilation shall be installed and operable.
C. All other trades shall have completed their work prior to the installation of the resilient multipurpose flooring. The general contractor or Construction Manager shall maintain a secure and clean working environment before, during and after the installation. Suspension of other trades' work may be authorized providing their work will not damage the new flooring.
D. Maintain a stable room temperature of at least 65°F for a minimum of one (1) week prior to, during, and thereafter installation.
E. An effective low-permeance vapor barrier is placed directly beneath the concrete subfloor. For "on" or "below grade" installations, it is recommended to provide a permanent vapor barrier resistant to long term hydrostatic pressure/moisture exposure. Protrusions should be sealed to prevent moisture migration into the slab. Moisture should not be allowed to enter the slab after the completed construction.
F. Concrete subfloor surface pH level within the 7 to 10 range dependent upon installation type.
G. Concrete subfloor should be no greater than 1/8" within a 10 ft diameter. This tolerance can be measured in accordance with ASTM E1155.

A specified (F_F) of 50 and an (F_L) of 30 should reach this degree of floor flatness and floor level. There is no numerical correlation between F numbers and the deviation from the straight edge; however the above specified numbers should achieve a flat floor with minimal deviation in the slab. Reference ACI 117 and ACI 302.1R. The general contractor should provide a certificate of compliance with the above recommendations.

H. Concrete subfloor must be clean and free of all foreign materials or objects including, but not limited to, curing compounds and sealers.

I. Fill cracks, grooves, voids, depressions, and other minor imperfections with Ardex (or equal) cement-based patching/leveling compounds. Follow the manufacturer's directions. Moveable joints must be treated utilizing specific transitioning joint devices depending upon the architect's recommendations. Follow current ASTM F710 guidelines for the preparation of concrete slabs to receive resilient flooring.

J. Refer to ACI 302.2R "Guidelines for Concrete Slabs that Receive Moisture-Sensitive Flooring Materials" for concrete design and construction.

K. Concrete slab shall be fortified with continual steel reinforcement. Fiber reinforcement alone shall not be considered adequate fortification.

1.6 *WARRANTY*

A. Materials:
The indoor resilient multipurpose surfacing shall be covered by the manufacturer against product defects for 10 years. The manufacturer of the indoor resilient multipurpose surfacing must provide this warranty upon request.

B. Installation:
The installation of the indoor resilient multipurpose surfacing shall be covered against poor workmanship and faulty installation by a two (2) year written, limited warranty provided by the contractor performing/overseeing the installation.

1.7 *ADDITIONAL MATERIALS*

Furnish to the owner additional materials containing a total of at least 1% of each different color or design of the indoor resilient multipurpose surfacing used on the project.

1.8 *LEED™ CERTIFICATION*

The indoor resilient athletic surfacing should be able to help this facility to achieve points towards *LEED™* certification. Flooring system must be certified by FloorScore.

Product Type			Linoleum Flooring
Building Reuse Maintain Interior Nonstructural Elements	**MR 1.2**	Renovation	1
Construction Waste Management	**MR 2**	Renovation	2
Recycled Content	**MR 4** **20% - 2 points**	New/Renovation	2
Materials and Resources Rapidly Renewable Materials	**MR 6**	New/Renovation	1

Indoor Environmental Air Quality Low VOC Adhesives/Sealants	**IEQ 4.1**	New/Renovation	1
Low-emitting Materials Paints and Coatings	**IEQ 4.2**	New/Renovation	1
Low-Emitting Materials Flooring Systems	**IEQ 4.3**	New/Renovation	1

PART 2 - PRODUCTS

2.1 *MANUFACTURERS*

The basis of the design for the indoor resilient multipurpose surfacing is LinoSport as manufactured by FieldTurf, USA, Inc. All other installation accessories and related components must be either made or approved by the indoor resilient surfacing manufacturer. Other products may be approved as equal if deemed qualified and submitted in accordance with the General Conditions..

2.2 *MATERIALS.*

LinoSport - Prefabricated 4.6 mm foam backed linoleum sports surfacing with marbled design and slightly textured surface as supplied by FieldTurf USA, Inc. Product to be naturally bacteriostatic and will not contribute to the proliferation of bacteria or fungus. The material's surface shall be protected with XF® X-treme performance finish or equivalent for ease of maintenance. Floor covering requiring waxes or other restorative treatments shall not be considered. Welding rod shall also incorporate the XF® X-treme finish or equivalent.

1. Physical properties of the indoor resilient athletic surfacing shall conform to the following minimums:

Width	…….	6'6" (2 m)
Length	…….	85' (25.9m) approx.
Total Thickness	…….	4.6 mm
Vertical Deformation	PASSED	0.6 (EN 14809)
Rolling Load	PASSED	0.30 (EN 1569 {11/1999})
Friction	PASSED	83 (EN 13036-4)
Sanitization	Excellent	Naturally Bacteriostatic
Sound Insulation	Excellent	+/= 19 dB (ISO 717/2)
Recycled Content	…….	22%
Surface Finish Effect	PASSED	ASTM F2772 (80 – 110)
Vertical Deformation	PASSED	ASTM F2772
Ball Rebound	PASSED	ASTM F2772 > 90%
Shock Absorption	PASSED	ASTM F2772 Category 1

A. Welding Rod:

As supplied by the indoor resilient surfacing manufacturer or supplier. Color to blend with the indoor resilient surfacing color or design. All seams shall be heat welded. Welding rod shall also incorporate the XF® X-treme finish or equivalent.

B. Adhesive:
Multi-Poxy adhesive. Follow adhesive manufacturer's recommendations.
C. Game Line Paint Primer:
As approved by the indoor resilient surfacing manufacturer.
D. Color: As available from the indoor resilient surfacing manufacturer's standard range.

PART 3 - EXECUTION

3.1 *EXAMINATION*

A. It is the responsibility of the general contractor/construction manager to ensure that project/site conditions are acceptable for the installation of the indoor resilient flooring.
B. Verify that the area in which the indoor resilient surfacing will be installed is dry and weather tight. Verify that permanent heat, light and ventilation is installed and operable.
C. Verify that all other work that could cause damage, dirt and dust or interrupt the normal pace of the indoor resilient flooring installation is completed or suspended.
D. Verify that there is a stable room temperature of at least 65°F.
E. Verify that there are no foreign materials or objects on the subfloor and that the subfloor is clean and ready for installation.
F. *Direct Full Spread Adhering to Concrete Subfloor* ***Multi-Poxy Adhesive****:* moisture content less 92% RH when tested per ASTM F2170.
G. Do not average the results of the tests. Report all field test results in writing to the General Contractor, Architect, and End User prior to installation.
H. Verify that the concrete subfloor surface pH level is within the 7 - 10 range.
I. Document the results indicating the slab is within manufacturer's tolerances for slab deviation.

3.2 *PREPARATION OF SURFACES*

A. Sand the entire surface of the concrete slab.
B. Sweep the concrete slab so as to remove all dirt and dust. If a sweeping compound is to be used it must be a sweeping compound that does not contain oil or other items that may inhibit the adhesive bond.
C. Slab must be dust free. In the event that dust impairs adhesive bond, priming the slab prior to application of adhesive may be necessary. Follow installation guidelines.

3.3 *INSTALLATION*

A. The installation area shall be closed to all traffic and activity for a period to be set by the indoor resilient surfacing installer. The indoor resilient surfacing installation shall not begin until the installer is familiar with the existing conditions.

B. All necessary precautions should be taken to minimize noise, smell, dust, the use of hazardous materials and any other items that may inconvenience others.
C. Install the indoor resilient surfacing in strict accordance with the indoor resilient surfacing manufacturer's written instructions.
D. Install the indoor resilient surfacing minimizing cross seams. Provide a seam diagram during the submittal process for approval prior to installation.
E. Paint game lines using approved game line paint primer and game line paint in strict accordance with the game line paint manufacturer's instructions.
F. Install appropriate threshold plates or transition strips where necessary.

3.5 *CLEANING*

A. Remove all unused materials, tools, and equipment and dispose of any debris properly. Clean the indoor resilient surfacing in accordance with the manufacturer's instructions.

3.6 *PROTECTION*

If required, protect the indoor resilient surfacing from damage using coverings approved by the manufacturer until acceptance of work by the customer or their authorized representative.

3.7 *RELATED STANDARDS AND GUIDELINES*

A. ASTM F2170 "Standard Test Method for Determining Relative Humidity In Concrete Floor Slabs Using In-Situ Probes"
B. ASTM F710 "Standard Practice for Preparing Concrete Floors to Receive Resilient Flooring"
C. ACI 302.2R-06 "Guideline for Concrete Slabs that Receive Moisture-Sensitive Flooring Materials"

END OF SECTION

SECTION 09 65 66
ARCHITECTURAL SPECIFICATIONS FOR INDOOR RESILIENT ATHLETIC SURFACING

PART 1 – GENERAL

1.1 *SECTION INCLUDES*

A. Supply and installation of the indoor resilient multipurpose surfacing
B. Application of the game lines
C. References for the correct construction and preparation of concrete slabs to receive resilient flooring.

1.2 *SUBMITTALS*

A. Product Data:
   1. Manufacturer's promotional brochures, specifications and installation instructions
B. Manufacturer Certifications:
   1. Provide certification that accurately identifies the Original Equipment Manufacturer (OEM) of flooring furnished for this project including manufacturer's name, address and factory location.
   2. Suppliers of private label flooring for this project must identify themselves as such and fully disclose the OEM information listed above.
   3. All "manufacturer" requirements in these specifications must be complied with by the OEM, including warranties, certifications, qualifications, product data, test results, environmental requirements, performance data, etc.
C. Samples:
   1. Submit for selection and approval three (3) sets of the indoor resilient multipurpose surfacing, manufacturer's brochures, samples or sample boards of all of the available colors, textures and styles.
   2. Submit color samples of all the available game line paint colors for selection and approval.
D. Closeout Submittals:
   1. Submit three (3) copies of the indoor resilient multipurpose surfacing and manufacturer's maintenance instructions.
   2. Submit three (3) copies of the material and installation warranties as specified.

1.3 *QUALITY ASSURANCE*

A. Qualifications:
   1. The indoor resilient multipurpose surfacing shall have been actively marketed for a minimum of ten (10) years.
   2. The indoor resilient multipurpose surfacing shall be manufactured in an ISO 9001 certified plant.
   3. The indoor resilient multipurpose surfacing shall be manufactured in an ISO 14001 certified plant.
   4. The indoor resilient multipurpose surfacing supplier shall be an established firm, experienced in the field, and competent in the techniques required by the manufacturer.
   5. The installer of the indoor resilient multipurpose surfacing shall have a minimum of five (5) years of experience in the field installing indoor resilient multipurpose surfacing and have worked on at least five (5) projects of similar size, type and complexity.

B. Certifications:
   1. Installer to submit the indoor resilient athletic surfacing manufacturer's certification attesting that they are a trained installer of the indoor resilient multipurpose surfacing.
   2. The indoor resilient multipurpose surfacing manufacturer to submit official ISO 9001 certification for the facility in which the indoor resilient multipurpose surfacing is manufactured.

C. Testing:
   1. Tests shall be relative for multi-purpose use with certificates from independent testing resources to be made available upon request.
   2. Test results shall be no more than 5 years old and performed according to ASTM standard testing procedures.

1.4 *DELIVERY, STORAGE AND HANDLING*

A. Delivery:
   Material shall not be delivered until all related work is in place and finished and/or proper storage facilities and conditions can be provided and guaranteed stable according to FieldTurf USA, Inc. recommendations.

B. Storage:
   1. Store the material in a secure, clean and dry location.
   2. Maintain temperature between 55° and 85° Fahrenheit.
   3. Store the indoor resilient athletic surfacing rolls in an upright position on a smooth flat surface immediately upon delivery to jobsite.
   4. Rolls shipped in rigid protective cardboard containers can be laid horizontally prior to unpacking and installation.

1.5 *PROJECT/SITE CONDITIONS*

A. It is the responsibility of the general contractor/construction manager to maintain project/site conditions acceptable for the installation of the indoor resilient multipurpose flooring.

B. The area in which the indoor resilient multipurpose surfacing will be installed shall be dry and weather tight. Permanent heat, light and ventilation shall be installed and operable.

C. All other trades shall have completed their work prior to the installation of the resilient athletic flooring. The general contractor or construction manager shall maintain a secure and clean working environment before, during and after the installation.

D. Maintain a stable room temperature of at least 65°F for a minimum of one (1) week prior to, during and thereafter installation.

E. An effective low-permeance vapor barrier is placed directly beneath the concrete subfloor. For "on" or "below grade" installations, it is recommended to provide a permanent vapor barrier resistant to long term hydrostatic pressure/moisture exposure. Protrusions should be sealed to prevent moisture migration into the slab. Moisture should not be allowed to enter the slab after the completed construction.

F. Concrete subfloor surface pH level within the 7 to 11 range dependent upon installation type.

G. Concrete subfloor should be no greater than 1/8" within a 10 ft diameter. This tolerance can be measured in accordance with ASTM E1155. A specified (F_F) of 50 and an (F_L) of 30 should reach this degree of floor flatness and floor level. There is no numerical correlation between F numbers and the deviation from the straight

edge. However, the above specified numbers should achieve a flat floor with minimal deviation in the slab. Reference ACI 117 and ACI 302.1R. The general contractor should provide a certificate of compliance with the above recommendations.

H. Concrete subfloor must be clean and free of all foreign materials or objects including, but not limited to, curing compounds and sealers.

I. Fill cracks, grooves, voids, depressions, and other minor imperfections. Follow the manufacturer's directions. Moveable joints must be treated utilizing specific transitioning joint devices depending upon the architect's recommendations. Follow current ASTM F710 guidelines for the preparation of concrete slabs to receive resilient flooring.

J. Refer to ACI 302.2R "Guidelines for Concrete Slabs that Receive Moisture-Sensitive Flooring Materials" for concrete design and construction.

K. Concrete slab shall be fortified with continual steel reinforcement. Fiber reinforcement alone shall not be considered adequate fortification.

1.6 *WARRANTY*

A. Special Limited Warranty:
   1. Manufacturer's standard form in which manufacturer agrees to repair or replace sports flooring including labor that fails within specified warranty period.

B. Material warranty must be direct from the product manufacturer.
   1. Material warranties from separate or third party insurance providers are not valid.
   2. Material warranties must come from original manufacturer or division thereof. Private label warranties from distributors or brokers are not valid. Supply original point of manufacturing upon request.

C. Failures include, but are not limited to, the following:
   1. Material manufacturing defects.
   2. Surface wear and deterioration to the point of wear-through of wear layer per ASTM F410/ASTM F1303.
   3. Failure due to substrate moisture exposure exceeding 80 percent relative humidity when tested according to ASTM F2170.

D. Warranty Period:
   1. <u>For material defects and surface wear-through:</u> **15** years from date of substantial completion.

E. Installer's Limited Warranty:
   1. Installer's standard form in which installer agrees to repair or replace sports flooring that fails due to poor workmanship or faulty installation within the specified warranty period.
   2. Warranty Period: 2 years from date of substantial completion.

1.7 *ADDITIONAL MATERIALS*

A. Furnish to the owner additional materials containing a total of at least 1% of each different color or design of the indoor resilient athletic surfacing used on the project.

1.8 *LEED™ CERTIFICATION*

A. The indoor resilient athletic surfacing should be able to help this facility to achieve points towards *LEED™ certification.* Flooring system must be certified by FloorScore.
B. LEED categories positively affected by the indoor resilient athletic surfacing:

LEED™ V4 Credit		Contribution
Materials & Resources: Building Product Disclosure & Optimization (BPDO)		
MRc3: Sourcing of Raw Materials	Options 1 & 2	2 Points
MRc4: Material Ingredients	Option 1	1 Point
MRc5: Construction and Demolition Management	Reclamation and Recycling	ReStart® Program
Indoor Environmental Quality		
EQc2: Low-Emitting Materials	TVOC: 0.5 mg/m3 or less	FloorScore®

PART 2 - PRODUCTS

2.1 *MANUFACTURERS*

A. The basis of the design for the indoor resilient multipurpose surfacing is Omnisports 3.5 mm and Lumaflex Elite system as manufactured by Tarkett.
B. All other installation accessories and related components must be either made or approved by the indoor resilient athletic surfacing manufacturer.
C. Other products may be approved as equal if deemed qualified and submitted in accordance with the General Conditions.
D. Test reports confirming compliance from an independent sports laboratory must be provided along with samples, technical data, installation, maintenance, and warranty prior to acceptance as an alternative product.

2.2 *MATERIALS*

A. Omnisports 3.5 mm - Prefabricated sport surface 2.0 mm (0.08″) with wood flooring design and slightly textured embossed surface as supplied by Tarkett.
   1. Embossing of wood design and solid colors must be the same; varying embossing or surface textures will not be allowed.
   2. Printing of wood design shall closely resemble standard wood strip flooring in size, color, board length, and grain appearance.
   3. The wood design shall be protected by a clear layer of pure PVC (Polyvinyl Chloride) and TopClean xp, a factory-applied UV cured urethane treatment.
   4. Intermediate layers shall be fortified with a non-woven fiberglass grid for increased dimensional stability.
   5. The Lumaflex Elite System shall incorporate Lumaflex Elite double tongue and grooved multi-ply engineered panels, force reduction cushion, and appropriate vapor retarder.

B. Physical properties of the indoor resilient athletic surfacing shall conform to the following minimums:

Width	—	6′ 6″ (2 m)
Length	—	85′ (25.9m) approx.
Wear Layer	—	2 mm
Total Thickness	—	3.5 mm
Total Combined Thickness		1 3/8″ (34.2 mm approx.)
Wear Layer	Type 1– Grade 1	ASTM F1303/F410
Rolling Load	PASSED	0.30 (EN 1569 {11/1999})
Force Reduction	PASSED	ASTM F2772 Class 5
Surface Finish Effect	PASSED	ASTM F2772 (80 – 110)
Vertical Deformation	PASSED	ASTM F2772
Ball Rebound	PASSED	ASTM F2772 > 90%
Chemical Resistance	Excellent	ASTM F925
Impact Resistance	PASSED	EN 1717
Abrasion Resistance	PASSED	0.10 (EN ISO 5470-1 {06/1999})
Static Load Limit	PASSED	ASTM F970- Load 175 Lbs
Phthalate-free technology	—	YES
REACH Compliant	—	YES
Heavy Metals	—	NO
ISO 9001	—	YES
ISO 14001	—	YES

1. Color: As available from the indoor resilient athletic surfacing manufacturer's standard range.
2. Hardwood Design Series: A wood look design as available from the indoor resilient athletic surfacing manufacturer's standard range.
3. Texture: Texture to remain consistent between solid colors and wood design when blending colors.

C. Welding Rod: As supplied by the indoor resilient athletic surfacing manufacturer or supplier.
   1. Color to blend with the indoor resilient athletic surfacing color or design.
   2. All seams shall be welded to create a monolithic and impermeable surface.

D. Adhesive: As approved by the indoor resilient athletic surfacing manufacturer.

E. Game Line Paint and Primer: As approved by the indoor resilient athletic surfacing manufacturer.

PART 3 - EXECUTION

3.1 *EXAMINATION*

A. It is the responsibility of the general contractor/construction manager to ensure that project/site conditions are acceptable for the installation of the indoor resilient athletic flooring.
B. Verify that the area in which the indoor resilient athletic surfacing will be installed is dry and weather tight. Verify that permanent heat, light and ventilation are installed and operable.
C. Verify that all other work that could cause damage, dirt and dust or interrupt the normal pace of the indoor resilient athletic flooring installation is completed or suspended.
D. Verify that there is a stable room temperature of at least 65◦F.
E. Verify that there are no foreign materials or objects on the subfloor and that the subfloor is clean and ready for installation.
F. *Concrete Subfloor: moisture content less than 85% RH when tested per ASTM F2170.*
G. Follow Fieldturf USA, Inc. installation recommendations.
H. Do not average the results of the tests. Report all field test results in writing to the General Contractor, Architect, and End User prior to installation.
I. Verify that the concrete subfloor surface pH level is within the 7 - 11 range.
J. Document the results confirming the slab is within manufacturer's tolerances for slab deviation.

3.2 *PREPARATION OF SURFACES*

A. Sand the entire surface of the concrete slab.
B. Sweep the concrete slab so as to remove all dirt and dust. If a sweeping compound is to be used it must be a sweeping compound that does not contain oil or other items that may inhibit the adhesive bond.
C. Slab must be dust free. In the event that dust impairs adhesive bond, priming the slab prior to application of adhesive may be necessary. Follow installation guidelines.
D. Follow OSHA guidelines.

3.3 *INSTALLATION*

A. The installation area shall be closed to all traffic and activity for a period to be set by the indoor resilient athletic surfacing installer. The indoor resilient athletic surfacing installation shall not begin until the installer is familiar with the existing conditions.
B. All necessary precautions should be taken to minimize noise, smell, dust, the use of hazardous materials and any other items that may inconvenience others.
C. Install the indoor resilient athletic surfacing in strict accordance with the indoor resilient athletic surfacing manufacturer's written instructions.
D. Install the indoor resilient athletic surfacing minimizing cross seams. Provide a seam diagram during the submittal process for approval prior to installation. Vinyl Sheet Flooring Seams: Comply with ASTM F 1516. Rout joints and heat weld to permanently and seamlessly fuse sections together.
E. Paint game lines using approved game line paint primer and game line paint in strict accordance with the game line paint manufacturer's instructions.
F. Install appropriate threshold plates or transition strips where necessary.

2.0 *CLEANING*

A. Remove all unused materials, tools, and equipment and dispose of any debris properly. Clean the indoor resilient athletic surfacing in accordance with the manufacturer's instructions.

3.6 *PROTECTION*

A. If required, protect the indoor resilient athletic surfacing from damage using coverings approved by the manufacturer until acceptance of work by the customer or their authorized representative.

3.7 *RELATED STANDARDS AND GUIDELINES*

A. ASTM F2170 "Standard Test Method for Determining Relative Humidity In Concrete Floor Slabs Using In-Situ Probes"
B. ASTM F710 "Standard Practice for Preparing Concrete Floors to Receive Resilient Flooring"
C. ACI 302.2R-06 "Guideline for Concrete Slabs that Receive Moisture-Sensitive Flooring Materials"
D. ASTM F2772-11 "Standard Specification for Athletic Performance Properties of Indoor Sports Floor Systems"

END OF SECTION

SECTION 09 65 66
ARCHITECTURAL SPECIFICATIONS FOR INDOOR RESILIENT ATHLETIC SURFACING

PART 1 – GENERAL

1.1 *SECTION INCLUDES*

A. Supply and installation of the indoor resilient multipurpose surfacing
B. Application of the game lines
C. References for the correct construction and preparation of concrete slabs to receive resilient flooring.

1.2 *SUBMITTALS*

A. Product Data:
   1. Manufacturer's promotional brochures, specifications and installation instructions
B. Manufacturer Certifications:
   1. Provide certification that accurately identifies the Original Equipment Manufacturer (OEM) of flooring furnished for this project including manufacturer's name, address and factory location.
   2. Suppliers of private label flooring for this project must identify themselves as such and fully disclose the OEM information listed above.
   3. All "manufacturer" requirements in these specifications must be complied with by the OEM, including warranties, certifications, qualifications, product data, test results, environmental requirements, performance data, etc.
C. Samples:
   1. Submit for selection and approval three (3) sets of the indoor resilient multipurpose surfacing, manufacturer's brochures, samples or sample boards of all of the available colors, textures and styles.
   2. Submit color samples of all the available game line paint colors for selection and approval.
D. Closeout Submittals:
   1. Submit three (3) copies of the indoor resilient multipurpose surfacing and manufacturer's maintenance instructions.
   2. Submit three (3) copies of the material and installation warranties as specified.

1.3 *QUALITY ASSURANCE*

A. Qualifications:
   1. The indoor resilient multipurpose surfacing shall have been actively marketed for a minimum of ten (10) years.
   2. The indoor resilient multipurpose surfacing shall be manufactured in an ISO 9001 certified plant.
   3. The indoor resilient multipurpose surfacing shall be manufactured in an ISO 14001 certified plant.
   4. The indoor resilient multipurpose surfacing supplier shall be an established firm, experienced in the field, and competent in the techniques required by the manufacturer.
   5. The installer of the indoor resilient multipurpose surfacing shall have a minimum of five (5) years of experience in the field installing indoor resilient multipurpose surfacing and have worked on at least five (5) projects of similar size, type and complexity.

B. Certifications:
   1. Installer to submit the indoor resilient athletic surfacing manufacturer's certification attesting that they are a trained installer of the indoor resilient multipurpose surfacing.
   2. The indoor resilient multipurpose surfacing manufacturer to submit official ISO 9001 certification for the facility in which the indoor resilient multipurpose surfacing is manufactured.

C. Testing:
   1. Tests shall be relative for multi-purpose use with certificates from independent testing resources to be made available upon request.
   2. Test results shall be no more than 5 years old and performed according to ASTM standard testing procedures.

1.4 *DELIVERY, STORAGE AND HANDLING*

A. Delivery:
   Material shall not be delivered until all related work is in place and finished and/or proper storage facilities and conditions can be provided and guaranteed stable according to FieldTurf USA, Inc. recommendations.

B. Storage:
   1. Store the material in a secure, clean and dry location.
   2. Maintain temperature between 55° and 85° Fahrenheit.
   3. Store the indoor resilient athletic surfacing rolls in an upright position on a smooth flat surface immediately upon delivery to jobsite.
   4. Rolls shipped in rigid protective cardboard containers can be laid horizontally prior to unpacking and installation.

1.5 *PROJECT/SITE CONDITIONS*

A. It is the responsibility of the general contractor/construction manager to maintain project/site conditions acceptable for the installation of the indoor resilient multipurpose flooring.

B. The area in which the indoor resilient multipurpose surfacing will be installed shall be dry and weather tight. Permanent heat, light and ventilation shall be installed and operable.

C. All other trades shall have completed their work prior to the installation of the resilient athletic flooring. The general contractor or construction manager shall maintain a secure and clean working environment before, during and after the installation.

D. Maintain a stable room temperature of at least 65°F for a minimum of one (1) week prior to, during and thereafter installation.

E. An effective low-permeance vapor barrier is placed directly beneath the concrete subfloor. For "on" or "below grade" installations, it is recommended to provide a permanent vapor barrier resistant to long term hydrostatic pressure/moisture exposure. Protrusions should be sealed to prevent moisture migration into the slab. Moisture should not be allowed to enter the slab after the completed construction.

F. Concrete subfloor surface pH level within the 7 to 11 range dependent upon installation type.

G. Concrete subfloor should be no greater than 1/8" within a 10 ft diameter. This tolerance can be measured in accordance with ASTM E1155. A specified (F_F) of 50 and an (F_L) of 30 should reach this degree of floor flatness and floor level. There is no numerical correlation between F numbers and the deviation from the straight

edge. However, the above specified numbers should achieve a flat floor with minimal deviation in the slab. Reference ACI 117 and ACI 302.1R. The general contractor should provide a certificate of compliance with the above recommendations.

H. Concrete subfloor must be clean and free of all foreign materials or objects including, but not limited to, curing compounds and sealers.

I. Fill cracks, grooves, voids, depressions, and other minor imperfections. Follow the manufacturer's directions. Moveable joints must be treated utilizing specific transitioning joint devices depending upon the architect's recommendations. Follow current ASTM F710 guidelines for the preparation of concrete slabs to receive resilient flooring.

J. Refer to ACI 302.2R "Guidelines for Concrete Slabs that Receive Moisture-Sensitive Flooring Materials" for concrete design and construction.

K. Concrete slab shall be fortified with continual steel reinforcement. Fiber reinforcement alone shall not be considered adequate fortification.

1.6 *WARRANTY*

A. Special Limited Warranty:
   1. Manufacturer's standard form in which manufacturer agrees to repair or replace sports flooring including labor that fails within specified warranty period.

B. Material warranty must be direct from the product manufacturer.
   1. Material warranties from separate or third party insurance providers are not valid.
   2. Material warranties must come from original manufacturer or division thereof. Private label warranties from distributors or brokers are not valid. Supply original point of manufacturing upon request.

C. Failures include, but are not limited to, the following:
   1. Material manufacturing defects.
   2. Surface wear and deterioration to the point of wear-through of wear layer per ASTM F410/ASTM F1303.
   3. Failure due to substrate moisture exposure exceeding 80 percent relative humidity when tested according to ASTM F2170.

D. Warranty Period:
   1. <u>For material defects and surface wear-through:</u> **15** years from date of substantial completion.

E. Installer's Limited Warranty:
   1. Installer's standard form in which installer agrees to repair or replace sports flooring that fails due to poor workmanship or faulty installation within the specified warranty period.
   2. Warranty Period: 2 years from date of substantial completion.

1.7 *ADDITIONAL MATERIALS*

A. Furnish to the owner additional materials containing a total of at least 1% of each different color or design of the indoor resilient athletic surfacing used on the project.

1.8 *LEED™ CERTIFICATION*

A. The indoor resilient athletic surfacing should be able to help this facility to achieve points towards *LEED™ certification.* Flooring system must be certified by FloorScore.
B. LEED categories positively affected by the indoor resilient athletic surfacing:

LEED™ V4 Credit		Contribution
Materials & Resources: Building Product Disclosure & Optimization (BPDO)		
MRc3: Sourcing of Raw Materials	Options 1 & 2	2 Points
MRc4: Material Ingredients	Option 1	1 Point
MRc5: Construction and Demolition Management	Reclamation and Recycling	ReStart® Program
Indoor Environmental Quality		
EQc2: Low-Emitting Materials	TVOC: 0.5 mg/m3 or less	FloorScore®

PART 2 - PRODUCTS

2.1 *MANUFACTURERS*

A. The basis of the design for the indoor resilient multipurpose surfacing is Omnisports 3.5 mm and Lumaflex Fit system as manufactured by Tarkett.
B. All other installation accessories and related components must be either made or approved by the indoor resilient athletic surfacing manufacturer.
C. Other products may be approved as equal if deemed qualified and submitted in accordance with the General Conditions.
D. Test reports confirming compliance from an independent sports laboratory must be provided along with samples, technical data, installation, maintenance, and warranty prior to acceptance as an alternative product.

2.2 *MATERIALS*

A. Omnisports 3.5 mm - Prefabricated sport surface 2.0 mm (0.08″) with wood flooring design and slightly textured embossed surface as supplied by Tarkett.
   1. Embossing of wood design and solid colors must be the same; varying embossing or surface textures will not be allowed.
   2. Printing of wood design shall closely resemble standard wood strip flooring in size, color, board length, and grain appearance.
   3. The wood design shall be protected by a clear layer of pure PVC (Polyvinyl Chloride) and TopClean xp, a factory-applied UV cured urethane treatment.
   4. Intermediate layers shall be fortified with a non-woven fiberglass grid for increased dimensional stability.
   5. The Lumaflex Fit System shall incorporate Lumaflex Fit double tongue and grooved multi-ply engineered panels, force reduction cushion, and appropriate vapor retarder.

B. Physical properties of the indoor resilient athletic surfacing shall conform to the following minimums:

Width	—	6′ 6″ (2 m)
Length	—	85′ (25.9m) approx.
Wear Layer	—	2 mm
Total Thickness	—	3.5 mm
Total Combined Thickness		47 mm (1.85″)
Wear Layer	Type 1– Grade 1	ASTM F1303/F410
Rolling Load	PASSED	0.30 (EN 1569 {11/1999})
Force Reduction	PASSED	ASTM F2772 Class 5
Surface Finish Effect	PASSED	ASTM F2772 (80 – 110)
Ball Rebound	PASSED	ASTM F2772 > 90%
Chemical Resistance	Excellent	ASTM F925
Impact Resistance	PASSED	EN 1717
Abrasion Resistance	PASSED	0.10 (EN ISO 5470-1 {06/1999})
Static Load Limit	PASSED	ASTM F970- Load 175 Lbs
Phthalate-free technology	—	YES
REACH Compliant	—	YES
Heavy Metals	—	NO
ISO 9001	—	YES
ISO 14001	—	YES

1. Color: As available from the indoor resilient athletic surfacing manufacturer's standard range.
2. Hardwood Design Series: A wood look design as available from the indoor resilient athletic surfacing manufacturer's standard range.
3. Texture: Texture to remain consistent between solid colors and wood design when blending colors.

C. Welding Rod: As supplied by the indoor resilient athletic surfacing manufacturer or supplier.
   1. Color to blend with the indoor resilient athletic surfacing color or design.
   2. All seams shall be welded to create a monolithic and impermeable surface.

D. Adhesive: As approved by the indoor resilient athletic surfacing manufacturer.

E. Game Line Paint and Primer: As approved by the indoor resilient athletic surfacing manufacturer.

PART 3 - EXECUTION

3.1 *EXAMINATION*

A. It is the responsibility of the general contractor/construction manager to ensure that project/site conditions are acceptable for the installation of the indoor resilient athletic flooring.
B. Verify that the area in which the indoor resilient athletic surfacing will be installed is dry and weather tight. Verify that permanent heat, light and ventilation are installed and operable.
C. Verify that all other work that could cause damage, dirt and dust or interrupt the normal pace of the indoor resilient athletic flooring installation is completed or suspended.
D. Verify that there is a stable room temperature of at least 65◦F.
E. Verify that there are no foreign materials or objects on the subfloor and that the subfloor is clean and ready for installation.
F. *Concrete Subfloor: moisture content less than 85% RH when tested per ASTM F2170.*
G. Follow Fieldturf USA, Inc. installation recommendations.
H. Do not average the results of the tests. Report all field test results in writing to the General Contractor, Architect, and End User prior to installation.
I. Verify that the concrete subfloor surface pH level is within the 7 - 11 range.
J. Document the results confirming the slab is within manufacturer's tolerances for slab deviation.

3.2 *PREPARATION OF SURFACES*

A. Sand the entire surface of the concrete slab.
B. Sweep the concrete slab so as to remove all dirt and dust. If a sweeping compound is to be used it must be a sweeping compound that does not contain oil or other items that may inhibit the adhesive bond.
C. Slab must be dust free. In the event that dust impairs adhesive bond, priming the slab prior to application of adhesive may be necessary. Follow installation guidelines.
D. Follow OSHA guidelines.

3.3 *INSTALLATION*

A. The installation area shall be closed to all traffic and activity for a period to be set by the indoor resilient athletic surfacing installer. The indoor resilient athletic surfacing installation shall not begin until the installer is familiar with the existing conditions.
B. All necessary precautions should be taken to minimize noise, smell, dust, the use of hazardous materials and any other items that may inconvenience others.
C. Install the indoor resilient athletic surfacing in strict accordance with the indoor resilient athletic surfacing manufacturer's written instructions.
D. Install the indoor resilient athletic surfacing minimizing cross seams. Provide a seam diagram during the submittal process for approval prior to installation. Vinyl Sheet Flooring Seams: Comply with ASTM F 1516. Rout joints and heat weld to permanently and seamlessly fuse sections together.
E. Paint game lines using approved game line paint primer and game line paint in strict accordance with the game line paint manufacturer's instructions.
F. Install appropriate threshold plates or transition strips where necessary.

2.0 *CLEANING*

A. Remove all unused materials, tools, and equipment and dispose of any debris properly. Clean the indoor resilient athletic surfacing in accordance with the manufacturer's instructions.

3.6 *PROTECTION*

A. If required, protect the indoor resilient athletic surfacing from damage using coverings approved by the manufacturer until acceptance of work by the customer or their authorized representative.

3.7 *RELATED STANDARDS AND GUIDELINES*

A. ASTM F2170 "Standard Test Method for Determining Relative Humidity In Concrete Floor Slabs Using In-Situ Probes"
B. ASTM F710 "Standard Practice for Preparing Concrete Floors to Receive Resilient Flooring"
C. ACI 302.2R-06 "Guideline for Concrete Slabs that Receive Moisture-Sensitive Flooring Materials"
D. ASTM F2772-11 "Standard Specification for Athletic Performance Properties of Indoor Sports Floor Systems"

END OF SECTION

SECTION 09 65 66
ARCHITECTURAL SPECIFICATIONS FOR INDOOR RESILIENT ATHLETIC SURFACING

PART 1 – GENERAL

1.1 *SECTION INCLUDES*

A. Supply and installation of the indoor resilient multipurpose surfacing
B. Application of the game lines
C. References for the correct construction and preparation of concrete slabs to receive resilient flooring.

1.2 *SUBMITTALS*

A. Product Data:
   1. Manufacturer's promotional brochures, specifications and installation instructions
B. Manufacturer Certifications:
   1. Provide certification that accurately identifies the Original Equipment Manufacturer (OEM) of flooring furnished for this project including manufacturer's name, address and factory location.
   2. Suppliers of private label flooring for this project must identify themselves as such and fully disclose the OEM information listed above.
   3. All "manufacturer" requirements in these specifications must be complied with by the OEM, including warranties, certifications, qualifications, product data, test results, environmental requirements, performance data, etc.
C. Samples:
   1. Submit for selection and approval three (3) sets of the indoor resilient multipurpose surfacing, manufacturer's brochures, samples or sample boards of all of the available colors, textures and styles.
   2. Submit color samples of all the available game line paint colors for selection and approval.
D. Closeout Submittals:
   1. Submit three (3) copies of the indoor resilient multipurpose surfacing and manufacturer's maintenance instructions.
   2. Submit three (3) copies of the material and installation warranties as specified.

1.3 *QUALITY ASSURANCE*

A. Qualifications:
   1. The indoor resilient multipurpose surfacing shall have been actively marketed for a minimum of ten (10) years.
   2. The indoor resilient multipurpose surfacing shall be manufactured in an ISO 9001 certified plant.
   3. The indoor resilient multipurpose surfacing shall be manufactured in an ISO 14001 certified plant.
   4. The indoor resilient multipurpose surfacing supplier shall be an established firm, experienced in the field, and competent in the techniques required by the manufacturer.
   5. The installer of the indoor resilient multipurpose surfacing shall have a minimum of five (5) years of experience in the field installing indoor resilient multipurpose surfacing and have worked on at least five (5) projects of similar size, type and complexity.

B. Certifications:
   1. Installer to submit the indoor resilient athletic surfacing manufacturer's certification attesting that they are a trained installer of the indoor resilient multipurpose surfacing.
   2. The indoor resilient multipurpose surfacing manufacturer to submit official ISO 9001 certification for the facility in which the indoor resilient multipurpose surfacing is manufactured.

C. Testing:
   1. Tests shall be relative for multi-purpose use with certificates from independent testing resources to be made available upon request.
   2. Test results shall be no more than 5 years old and performed according to ASTM standard testing procedures.

1.4 *DELIVERY, STORAGE AND HANDLING*

A. Delivery:
   Material shall not be delivered until all related work is in place and finished and/or proper storage facilities and conditions can be provided and guaranteed stable according to FieldTurf USA, Inc. recommendations.

B. Storage:
   1. Store the material in a secure, clean and dry location.
   2. Maintain temperature between 55° and 85° Fahrenheit.
   3. Store the indoor resilient athletic surfacing rolls in an upright position on a smooth flat surface immediately upon delivery to jobsite.
   4. Rolls shipped in rigid protective cardboard containers can be laid horizontally prior to unpacking and installation.

1.5 *PROJECT/SITE CONDITIONS*

A. It is the responsibility of the general contractor/construction manager to maintain project/site conditions acceptable for the installation of the indoor resilient multipurpose flooring.

B. The area in which the indoor resilient multipurpose surfacing will be installed shall be dry and weather tight. Permanent heat, light and ventilation shall be installed and operable.

C. All other trades shall have completed their work prior to the installation of the resilient athletic flooring. The general contractor or construction manager shall maintain a secure and clean working environment before, during and after the installation.

D. Maintain a stable room temperature of at least 65°F for a minimum of one (1) week prior to, during and thereafter installation.

E. An effective low-permeance vapor barrier is placed directly beneath the concrete subfloor. For "on" or "below grade" installations, it is recommended to provide a permanent vapor barrier resistant to long term hydrostatic pressure/moisture exposure. Protrusions should be sealed to prevent moisture migration into the slab. Moisture should not be allowed to enter the slab after the completed construction.

F. Concrete subfloor surface pH level within the 7 to 11 range dependent upon installation type.

G. Concrete subfloor should be no greater than 1/8" within a 10 ft diameter. This tolerance can be measured in accordance with ASTM E1155. A specified (F_F) of 50 and an (F_L) of 30 should reach this degree of floor flatness and floor level. There is no numerical correlation between F numbers and the deviation from the straight

edge. However, the above specified numbers should achieve a flat floor with minimal deviation in the slab. Reference ACI 117 and ACI 302.1R. The general contractor should provide a certificate of compliance with the above recommendations.

H. Concrete subfloor must be clean and free of all foreign materials or objects including, but not limited to, curing compounds and sealers.

I. Fill cracks, grooves, voids, depressions, and other minor imperfections. Follow the manufacturer's directions. Moveable joints must be treated utilizing specific transitioning joint devices depending upon the architect's recommendations. Follow current ASTM F710 guidelines for the preparation of concrete slabs to receive resilient flooring.

J. Refer to ACI 302.2R "Guidelines for Concrete Slabs that Receive Moisture-Sensitive Flooring Materials" for concrete design and construction.

K. Concrete slab shall be fortified with continual steel reinforcement. Fiber reinforcement alone shall not be considered adequate fortification.

1.6 *WARRANTY*

A. Special Limited Warranty:
   1. Manufacturer's standard form in which manufacturer agrees to repair or replace sports flooring including labor that fails within specified warranty period.

B. Material warranty must be direct from the product manufacturer.
   1. Material warranties from separate or third party insurance providers are not valid.
   2. Material warranties must come from original manufacturer or division thereof. Private label warranties from distributors or brokers are not valid. Supply original point of manufacturing upon request.

C. Failures include, but are not limited to, the following:
   1. Material manufacturing defects.
   2. Surface wear and deterioration to the point of wear-through of wear layer per ASTM F410/ASTM F1303.
   3. Failure due to substrate moisture exposure exceeding 80 percent relative humidity when tested according to ASTM F2170.

D. Warranty Period:
   1. <u>For material defects and surface wear-through:</u> **15** years from date of substantial completion.

E. Installer's Limited Warranty:
   1. Installer's standard form in which installer agrees to repair or replace sports flooring that fails due to poor workmanship or faulty installation within the specified warranty period.
   2. Warranty Period: 2 years from date of substantial completion.

1.7 *ADDITIONAL MATERIALS*

A. Furnish to the owner additional materials containing a total of at least 1% of each different color or design of the indoor resilient athletic surfacing used on the project.

1.8 *LEED™ CERTIFICATION*

A. The indoor resilient athletic surfacing should be able to help this facility to achieve points towards *LEED™ certification.* Flooring system must be certified by FloorScore.
B. LEED categories positively affected by the indoor resilient athletic surfacing:

LEED™ V4 Credit		Contribution
Materials & Resources: Building Product Disclosure & Optimization (BPDO)		
MRc3: Sourcing of Raw Materials	Options 1 & 2	2 Points
MRc4: Material Ingredients	Option 1	1 Point
MRc5: Construction and Demolition Management	Reclamation and Recycling	ReStart® Program
Indoor Environmental Quality		
EQc2: Low-Emitting Materials	TVOC: 0.5 mg/m3 or less	FloorScore®

PART 2 - PRODUCTS

2.1 *MANUFACTURERS*

A. The basis of the design for the indoor resilient multipurpose surfacing is Omnisports 3.5 mm and Lumaflex system as manufactured by Tarkett.
B. All other installation accessories and related components must be either made or approved by the indoor resilient athletic surfacing manufacturer.
C. Other products may be approved as equal if deemed qualified and submitted in accordance with the General Conditions.
D. Test reports confirming compliance from an independent sports laboratory must be provided along with samples, technical data, installation, maintenance, and warranty prior to acceptance as an alternative product.

2.2 *MATERIALS*

A. Omnisports 3.5 mm - Prefabricated sport surface 2.0 mm (0.08″) with wood flooring design and slightly textured embossed surface as supplied by Tarkett.
   1. Embossing of wood design and solid colors must be the same; varying embossing or surface textures will not be allowed.
   2. Printing of wood design shall closely resemble standard wood strip flooring in size, color, board length, and grain appearance.
   3. The wood design shall be protected by a clear layer of pure PVC (Polyvinyl Chloride) and TopClean xp, a factory-applied UV cured urethane treatment.
   4. Intermediate layers shall be fortified with a non-woven fiberglass grid for increased dimensional stability.
   5. The Lumaflex System shall incorporate Lumaflex double tongue and grooved multi-ply engineered panels, force reduction cushion, and appropriate vapor retarder.

B. Physical properties of the indoor resilient athletic surfacing shall conform to the following minimums:

Width	—	6′ 6″ (2 m)
Length	—	85′ (25.9m) approx.
Wear Layer	—	2 mm
Total Thickness	—	3.5 mm
Total Combined Thickness		1 3/8″ (34.2 mm approx.)
Wear Layer	Type 1– Grade 1	ASTM F1303/F410
Rolling Load	PASSED	0.30 (EN 1569 {11/1999})
Force Reduction	PASSED	ASTM F2772 Class 4
Surface Finish Effect	PASSED	ASTM F2772 (80 – 110)
Vertical Deformation	PASSED	ASTM F2772
Ball Rebound	PASSED	ASTM F2772 > 90%
Chemical Resistance	Excellent	ASTM F925
Impact Resistance	PASSED	EN 1717
Abrasion Resistance	PASSED	0.10 (EN ISO 5470-1 {06/1999})
Static Load Limit	PASSED	ASTM F970- Load 175 Lbs
Fire Rating	PASSED	ASTM E648 Class 1
Phthalate-free technology	—	YES
REACH Compliant	—	YES
Heavy Metals	—	NO
ISO 9001	—	YES
ISO 14001	—	YES

1. Color: As available from the indoor resilient athletic surfacing manufacturer's standard range.
2. Hardwood Design Series: A wood look design as available from the indoor resilient athletic surfacing manufacturer's standard range.
3. Texture: Texture to remain consistent between solid colors and wood design when blending colors.

C. Welding Rod: As supplied by the indoor resilient athletic surfacing manufacturer or supplier.
   1. Color to blend with the indoor resilient athletic surfacing color or design.
   2. All seams shall be welded to create a monolithic and impermeable surface.

D. Adhesive: As approved by the indoor resilient athletic surfacing manufacturer.

E. Game Line Paint and Primer: As approved by the indoor resilient athletic surfacing manufacturer.

PART 3 - EXECUTION

3.1 *EXAMINATION*

A. It is the responsibility of the general contractor/construction manager to ensure that project/site conditions are acceptable for the installation of the indoor resilient athletic flooring.
B. Verify that the area in which the indoor resilient athletic surfacing will be installed is dry and weather tight. Verify that permanent heat, light and ventilation are installed and operable.
C. Verify that all other work that could cause damage, dirt and dust or interrupt the normal pace of the indoor resilient athletic flooring installation is completed or suspended.
D. Verify that there is a stable room temperature of at least 65◦F.
E. Verify that there are no foreign materials or objects on the subfloor and that the subfloor is clean and ready for installation.
F. *Concrete Subfloor: moisture content less than 85% RH when tested per ASTM F2170.*
G. Follow Fieldturf USA, Inc. installation recommendations.
H. Do not average the results of the tests. Report all field test results in writing to the General Contractor, Architect, and End User prior to installation.
I. Verify that the concrete subfloor surface pH level is within the 7 - 11 range.
J. Document the results confirming the slab is within manufacturer's tolerances for slab deviation.

3.2 *PREPARATION OF SURFACES*

A. Sand the entire surface of the concrete slab.
B. Sweep the concrete slab so as to remove all dirt and dust. If a sweeping compound is to be used it must be a sweeping compound that does not contain oil or other items that may inhibit the adhesive bond.
C. Slab must be dust free. In the event that dust impairs adhesive bond, priming the slab prior to application of adhesive may be necessary. Follow installation guidelines.
D. Follow OSHA guidelines.

3.3 *INSTALLATION*

A. The installation area shall be closed to all traffic and activity for a period to be set by the indoor resilient athletic surfacing installer. The indoor resilient athletic surfacing installation shall not begin until the installer is familiar with the existing conditions.
B. All necessary precautions should be taken to minimize noise, smell, dust, the use of hazardous materials and any other items that may inconvenience others.
C. Install the indoor resilient athletic surfacing in strict accordance with the indoor resilient athletic surfacing manufacturer's written instructions.
D. Install the indoor resilient athletic surfacing minimizing cross seams. Provide a seam diagram during the submittal process for approval prior to installation. Vinyl Sheet Flooring Seams: Comply with ASTM F 1516. Rout joints and heat weld to permanently and seamlessly fuse sections together.
E. Paint game lines using approved game line paint primer and game line paint in strict accordance with the game line paint manufacturer's instructions.
F. Install appropriate threshold plates or transition strips where necessary.

2.0 *CLEANING*

A. Remove all unused materials, tools, and equipment and dispose of any debris properly. Clean the indoor resilient athletic surfacing in accordance with the manufacturer's instructions.

3.6 *PROTECTION*

A. If required, protect the indoor resilient athletic surfacing from damage using coverings approved by the manufacturer until acceptance of work by the customer or their authorized representative.

3.7 *RELATED STANDARDS AND GUIDELINES*

A. ASTM F2170 "Standard Test Method for Determining Relative Humidity In Concrete Floor Slabs Using In-Situ Probes"
B. ASTM F710 "Standard Practice for Preparing Concrete Floors to Receive Resilient Flooring"
C. ACI 302.2R-06 "Guideline for Concrete Slabs that Receive Moisture-Sensitive Flooring Materials"
D. ASTM F2772-11 "Standard Specification for Athletic Performance Properties of Indoor Sports Floor Systems"

END OF SECTION

SECTION 09 65 66
ARCHITECTURAL SPECIFICATIONS FOR INDOOR RESILIENT ATHLETIC SURFACING

PART 1 – GENERAL

1.1 *SECTION INCLUDES*

A. Supply and installation of the indoor resilient multipurpose surfacing
B. Application of the game lines
C. References for the correct construction and preparation of concrete slabs to receive resilient flooring.

1.2 *SUBMITTALS*

A. Product Data:
   1. Manufacturer's promotional brochures, specifications and installation instructions
B. Manufacturer Certifications:
   1. Provide certification that accurately identifies the Original Equipment Manufacturer (OEM) of flooring furnished for this project including manufacturer's name, address and factory location.
   2. Suppliers of private label flooring for this project must identify themselves as such and fully disclose the OEM information listed above.
   3. All "manufacturer" requirements in these specifications must be complied with by the OEM, including warranties, certifications, qualifications, product data, test results, environmental requirements, performance data, etc.
C. Samples:
   1. Submit for selection and approval three (3) sets of the indoor resilient multipurpose surfacing, manufacturer's brochures, samples or sample boards of all of the available colors, textures and styles.
   2. Submit color samples of all the available game line paint colors for selection and approval.
D. Closeout Submittals:
   1. Submit three (3) copies of the indoor resilient multipurpose surfacing and manufacturer's maintenance instructions.
   2. Submit three (3) copies of the material and installation warranties as specified.

1.3 *QUALITY ASSURANCE*

A. Qualifications:
   1. The indoor resilient multipurpose surfacing shall have been actively marketed for a minimum of ten (10) years.
   2. The indoor resilient multipurpose surfacing shall be manufactured in an ISO 9001 certified plant.
   3. The indoor resilient multipurpose surfacing shall be manufactured in an ISO 14001 certified plant.
   4. The indoor resilient multipurpose surfacing supplier shall be an established firm, experienced in the field, and competent in the techniques required by the manufacturer.
   5. The installer of the indoor resilient multipurpose surfacing shall have a minimum of five (5) years of experience in the field installing indoor resilient multipurpose surfacing and have worked on at least five (5) projects of similar size, type and complexity.

B. Certifications:
   1. Installer to submit the indoor resilient athletic surfacing manufacturer's certification attesting that they are a trained installer of the indoor resilient multipurpose surfacing.
   2. The indoor resilient multipurpose surfacing manufacturer to submit official ISO 9001 certification for the facility in which the indoor resilient multipurpose surfacing is manufactured.

C. Testing:
   1. Tests shall be relative for multi-purpose use with certificates from independent testing resources to be made available upon request.
   2. Test results shall be no more than 5 years old and performed according to ASTM standard testing procedures.

1.4 *DELIVERY, STORAGE AND HANDLING*

A. Delivery:
   Material shall not be delivered until all related work is in place and finished and/or proper storage facilities and conditions can be provided and guaranteed stable according to FieldTurf USA, Inc. recommendations.

B. Storage:
   1. Store the material in a secure, clean and dry location.
   2. Maintain temperature between 55° and 85° Fahrenheit.
   3. Store the indoor resilient athletic surfacing rolls in an upright position on a smooth flat surface immediately upon delivery to jobsite.
   4. Rolls shipped in rigid protective cardboard containers can be laid horizontally prior to unpacking and installation.

1.5 *PROJECT/SITE CONDITIONS*

A. It is the responsibility of the general contractor/construction manager to maintain project/site conditions acceptable for the installation of the indoor resilient multipurpose flooring.

B. The area in which the indoor resilient multipurpose surfacing will be installed shall be dry and weather tight. Permanent heat, light and ventilation shall be installed and operable.

C. All other trades shall have completed their work prior to the installation of the resilient athletic flooring. The general contractor or construction manager shall maintain a secure and clean working environment before, during and after the installation.

D. Maintain a stable room temperature of at least 65°F for a minimum of one (1) week prior to, during and thereafter installation.

E. An effective low-permeance vapor barrier is placed directly beneath the concrete subfloor. For "on" or "below grade" installations, it is recommended to provide a permanent vapor barrier resistant to long term hydrostatic pressure/moisture exposure. Protrusions should be sealed to prevent moisture migration into the slab. Moisture should not be allowed to enter the slab after the completed construction.

F. Concrete subfloor surface pH level within the 7 to 11 range dependent upon installation type.

G. Concrete subfloor should be no greater than 1/8" within a 10 ft diameter. This tolerance can be measured in accordance with ASTM E1155. A specified (F_F) of 50 and an (F_L) of 30 should reach this degree of floor flatness and floor level. There is no numerical correlation between F numbers and the deviation from the straight

edge. However, the above specified numbers should achieve a flat floor with minimal deviation in the slab. Reference ACI 117 and ACI 302.1R. The general contractor should provide a certificate of compliance with the above recommendations.

H. Concrete subfloor must be clean and free of all foreign materials or objects including, but not limited to, curing compounds and sealers.

I. Fill cracks, grooves, voids, depressions, and other minor imperfections. Follow the manufacturer's directions. Moveable joints must be treated utilizing specific transitioning joint devices depending upon the architect's recommendations. Follow current ASTM F710 guidelines for the preparation of concrete slabs to receive resilient flooring.

J. Refer to ACI 302.2R "Guidelines for Concrete Slabs that Receive Moisture-Sensitive Flooring Materials" for concrete design and construction.

K. Concrete slab shall be fortified with continual steel reinforcement. Fiber reinforcement alone shall not be considered adequate fortification.

1.6 *WARRANTY*

A. Special Limited Warranty:
   1. Manufacturer's standard form in which manufacturer agrees to repair or replace sports flooring including labor that fails within specified warranty period.

B. Material warranty must be direct from the product manufacturer.
   1. Material warranties from separate or third party insurance providers are not valid.
   2. Material warranties must come from original manufacturer or division thereof. Private label warranties from distributors or brokers are not valid. Supply original point of manufacturing upon request.

C. Failures include, but are not limited to, the following:
   1. Material manufacturing defects.
   2. Surface wear and deterioration to the point of wear-through of wear layer per ASTM F410/ASTM F1303.
   3. Failure due to substrate moisture exposure exceeding 80 percent relative humidity when tested according to ASTM F2170.

D. Warranty Period:
   1. <u>For material defects and surface wear-through:</u> **15** years from date of substantial completion.

E. Installer's Limited Warranty:
   1. Installer's standard form in which installer agrees to repair or replace sports flooring that fails due to poor workmanship or faulty installation within the specified warranty period.
   2. Warranty Period: 2 years from date of substantial completion.

1.7 *ADDITIONAL MATERIALS*

A. Furnish to the owner additional materials containing a total of at least 1% of each different color or design of the indoor resilient athletic surfacing used on the project.

1.8 *LEED™ CERTIFICATION*

A. The indoor resilient athletic surfacing should be able to help this facility to achieve points towards *LEED™ certification.* Flooring system must be certified by FloorScore.
B. LEED categories positively affected by the indoor resilient athletic surfacing:

LEED™ V4 Credit		Contribution
Materials & Resources: Building Product Disclosure & Optimization (BPDO)		
MRc3: Sourcing of Raw Materials	Options 1 & 2	2 Points
MRc4: Material Ingredients	Option 1	1 Point
MRc5: Construction and Demolition Management	Reclamation and Recycling	ReStart® Program
Indoor Environmental Quality		
EQc2: Low-Emitting Materials	TVOC: 0.5 mg/m3 or less	FloorScore®

PART 2 - PRODUCTS

2.1 *MANUFACTURERS*

A. The basis of the design for the indoor resilient multipurpose surfacing is Omnisports 5.5 mm and Lumaflex Elite system as manufactured by Tarkett.
B. All other installation accessories and related components must be either made or approved by the indoor resilient athletic surfacing manufacturer.
C. Other products may be approved as equal if deemed qualified and submitted in accordance with the General Conditions.
D. Test reports confirming compliance from an independent sports laboratory must be provided along with samples, technical data, installation, maintenance, and warranty prior to acceptance as an alternative product.

2.2 *MATERIALS*

A. Omnisports 5.5 mm - Prefabricated sport surface 2.0 mm (0.08″) with wood flooring design and slightly textured embossed surface as supplied by Tarkett.
   1. Embossing of wood design and solid colors must be the same; varying embossing or surface textures will not be allowed.
   2. Printing of wood design shall closely resemble standard wood strip flooring in size, color, board length, and grain appearance.
   3. The wood design shall be protected by a clear layer of pure PVC (Polyvinyl Chloride) and TopClean xp, a factory-applied UV cured urethane treatment.
   4. Intermediate layers shall be fortified with a non-woven fiberglass grid for increased dimensional stability.
   5. The Lumaflex Elite System shall incorporate Lumaflex Elite double tongue and grooved multi-ply engineered panels, force reduction cushion, and appropriate vapor retarder.

B. Physical properties of the indoor resilient athletic surfacing shall conform to the following minimums:

Width	—	6′ 6″ (2 m)
Length	—	85′ (25.9m) approx.
Wear Layer	—	2 mm
Total Thickness	—	5.5 mm
Total Combined Thickness		1 7/16″ (35.7 mm approx.)
Wear Layer	Type 1– Grade 1	ASTM F1303/F410
Rolling Load	PASSED	0.30 (EN 1569 {11/1999})
Force Reduction	PASSED	ASTM F2772 Class 5
Surface Finish Effect	PASSED	ASTM F2772 (80 – 110)
Vertical Deformation	PASSED	ASTM F2772
Ball Rebound	PASSED	ASTM F2772 > 90%
Chemical Resistance	Excellent	ASTM F925
Impact Resistance	PASSED	EN 1717
Abrasion Resistance	PASSED	0.10 (EN ISO 5470-1 {06/1999})
Static Load Limit	PASSED	ASTM F970- Load 175 Lbs
Phthalate-free technology	—	YES
REACH Compliant	—	YES
Heavy Metals	—	NO
ISO 9001	—	YES
ISO 14001	—	YES

1. Color: As available from the indoor resilient athletic surfacing manufacturer's standard range.
2. Hardwood Design Series: A wood look design as available from the indoor resilient athletic surfacing manufacturer's standard range.
3. Texture: Texture to remain consistent between solid colors and wood design when blending colors.

C. Welding Rod: As supplied by the indoor resilient athletic surfacing manufacturer or supplier.
   1. Color to blend with the indoor resilient athletic surfacing color or design.
   2. All seams shall be welded to create a monolithic and impermeable surface.

D. Adhesive: As approved by the indoor resilient athletic surfacing manufacturer.

E. Game Line Paint and Primer: As approved by the indoor resilient athletic surfacing manufacturer.

PART 3 - EXECUTION

3.1 *EXAMINATION*

A. It is the responsibility of the general contractor/construction manager to ensure that project/site conditions are acceptable for the installation of the indoor resilient athletic flooring.
B. Verify that the area in which the indoor resilient athletic surfacing will be installed is dry and weather tight. Verify that permanent heat, light and ventilation are installed and operable.
C. Verify that all other work that could cause damage, dirt and dust or interrupt the normal pace of the indoor resilient athletic flooring installation is completed or suspended.
D. Verify that there is a stable room temperature of at least 65◦F.
E. Verify that there are no foreign materials or objects on the subfloor and that the subfloor is clean and ready for installation.
F. *Concrete Subfloor: moisture content less than 85% RH when tested per ASTM F2170.*
G. Follow Fieldturf USA, Inc. installation recommendations.
H. Do not average the results of the tests. Report all field test results in writing to the General Contractor, Architect, and End User prior to installation.
I. Verify that the concrete subfloor surface pH level is within the 7 - 11 range.
J. Document the results confirming the slab is within manufacturer's tolerances for slab deviation.

3.2 *PREPARATION OF SURFACES*

A. Sand the entire surface of the concrete slab.
B. Sweep the concrete slab so as to remove all dirt and dust. If a sweeping compound is to be used it must be a sweeping compound that does not contain oil or other items that may inhibit the adhesive bond.
C. Slab must be dust free. In the event that dust impairs adhesive bond, priming the slab prior to application of adhesive may be necessary. Follow installation guidelines.
D. Follow OSHA guidelines.

3.3 *INSTALLATION*

A. The installation area shall be closed to all traffic and activity for a period to be set by the indoor resilient athletic surfacing installer. The indoor resilient athletic surfacing installation shall not begin until the installer is familiar with the existing conditions.
B. All necessary precautions should be taken to minimize noise, smell, dust, the use of hazardous materials and any other items that may inconvenience others.
C. Install the indoor resilient athletic surfacing in strict accordance with the indoor resilient athletic surfacing manufacturer's written instructions.
D. Install the indoor resilient athletic surfacing minimizing cross seams. Provide a seam diagram during the submittal process for approval prior to installation. Vinyl Sheet Flooring Seams: Comply with ASTM F 1516. Rout joints and heat weld to permanently and seamlessly fuse sections together.
E. Paint game lines using approved game line paint primer and game line paint in strict accordance with the game line paint manufacturer's instructions.
F. Install appropriate threshold plates or transition strips where necessary.

2.0 *CLEANING*

A. Remove all unused materials, tools, and equipment and dispose of any debris properly. Clean the indoor resilient athletic surfacing in accordance with the manufacturer's instructions.

3.6 *PROTECTION*

A. If required, protect the indoor resilient athletic surfacing from damage using coverings approved by the manufacturer until acceptance of work by the customer or their authorized representative.

3.7 *RELATED STANDARDS AND GUIDELINES*

A. ASTM F2170 "Standard Test Method for Determining Relative Humidity In Concrete Floor Slabs Using In-Situ Probes"
B. ASTM F710 "Standard Practice for Preparing Concrete Floors to Receive Resilient Flooring"
C. ACI 302.2R-06 "Guideline for Concrete Slabs that Receive Moisture-Sensitive Flooring Materials"
D. ASTM F2772-11 "Standard Specification for Athletic Performance Properties of Indoor Sports Floor Systems"

END OF SECTION

SECTION 09 65 66
ARCHITECTURAL SPECIFICATIONS FOR INDOOR RESILIENT ATHLETIC SURFACING

PART 1 – GENERAL

1.1 *SECTION INCLUDES*

A. Supply and installation of the indoor resilient multipurpose surfacing
B. Application of the game lines
C. References for the correct construction and preparation of concrete slabs to receive resilient flooring.

1.2 *SUBMITTALS*

A. Product Data:
   1. Manufacturer's promotional brochures, specifications and installation instructions
B. Manufacturer Certifications:
   1. Provide certification that accurately identifies the Original Equipment Manufacturer (OEM) of flooring furnished for this project including manufacturer's name, address and factory location.
   2. Suppliers of private label flooring for this project must identify themselves as such and fully disclose the OEM information listed above.
   3. All "manufacturer" requirements in these specifications must be complied with by the OEM, including warranties, certifications, qualifications, product data, test results, environmental requirements, performance data, etc.
C. Samples:
   1. Submit for selection and approval three (3) sets of the indoor resilient multipurpose surfacing, manufacturer's brochures, samples or sample boards of all of the available colors, textures and styles.
   2. Submit color samples of all the available game line paint colors for selection and approval.
D. Closeout Submittals:
   1. Submit three (3) copies of the indoor resilient multipurpose surfacing and manufacturer's maintenance instructions.
   2. Submit three (3) copies of the material and installation warranties as specified.

1.3 *QUALITY ASSURANCE*

A. Qualifications:
   1. The indoor resilient multipurpose surfacing shall have been actively marketed for a minimum of ten (10) years.
   2. The indoor resilient multipurpose surfacing shall be manufactured in an ISO 9001 certified plant.
   3. The indoor resilient multipurpose surfacing shall be manufactured in an ISO 14001 certified plant.
   4. The indoor resilient multipurpose surfacing supplier shall be an established firm, experienced in the field, and competent in the techniques required by the manufacturer.
   5. The installer of the indoor resilient multipurpose surfacing shall have a minimum of five (5) years of experience in the field installing indoor resilient multipurpose surfacing and have worked on at least five (5) projects of similar size, type and complexity.

B. Certifications:
   1. Installer to submit the indoor resilient athletic surfacing manufacturer's certification attesting that they are a trained installer of the indoor resilient multipurpose surfacing.
   2. The indoor resilient multipurpose surfacing manufacturer to submit official ISO 9001 certification for the facility in which the indoor resilient multipurpose surfacing is manufactured.

C. Testing:
   1. Tests shall be relative for multi-purpose use with certificates from independent testing resources to be made available upon request.
   2. Test results shall be no more than 5 years old and performed according to ASTM standard testing procedures.

1.4 *DELIVERY, STORAGE AND HANDLING*

A. Delivery:
   Material shall not be delivered until all related work is in place and finished and/or proper storage facilities and conditions can be provided and guaranteed stable according to FieldTurf USA, Inc. recommendations.

B. Storage:
   1. Store the material in a secure, clean and dry location.
   2. Maintain temperature between 55° and 85° Fahrenheit.
   3. Store the indoor resilient athletic surfacing rolls in an upright position on a smooth flat surface immediately upon delivery to jobsite.
   4. Rolls shipped in rigid protective cardboard containers can be laid horizontally prior to unpacking and installation.

1.5 *PROJECT/SITE CONDITIONS*

A. It is the responsibility of the general contractor/construction manager to maintain project/site conditions acceptable for the installation of the indoor resilient multipurpose flooring.

B. The area in which the indoor resilient multipurpose surfacing will be installed shall be dry and weather tight. Permanent heat, light and ventilation shall be installed and operable.

C. All other trades shall have completed their work prior to the installation of the resilient athletic flooring. The general contractor or construction manager shall maintain a secure and clean working environment before, during and after the installation.

D. Maintain a stable room temperature of at least 65°F for a minimum of one (1) week prior to, during and thereafter installation.

E. An effective low-permeance vapor barrier is placed directly beneath the concrete subfloor. For "on" or "below grade" installations, it is recommended to provide a permanent vapor barrier resistant to long term hydrostatic pressure/moisture exposure. Protrusions should be sealed to prevent moisture migration into the slab. Moisture should not be allowed to enter the slab after the completed construction.

F. Concrete subfloor surface pH level within the 7 to 11 range dependent upon installation type.

G. Concrete subfloor should be no greater than 1/8" within a 10 ft diameter. This tolerance can be measured in accordance with ASTM E1155. A specified (F_F) of 50 and an (F_L) of 30 should reach this degree of floor flatness and floor level. There is no numerical correlation between F numbers and the deviation from the straight

edge. However, the above specified numbers should achieve a flat floor with minimal deviation in the slab. Reference ACI 117 and ACI 302.1R. The general contractor should provide a certificate of compliance with the above recommendations.

H. Concrete subfloor must be clean and free of all foreign materials or objects including, but not limited to, curing compounds and sealers.

I. Fill cracks, grooves, voids, depressions, and other minor imperfections. Follow the manufacturer's directions. Moveable joints must be treated utilizing specific transitioning joint devices depending upon the architect's recommendations. Follow current ASTM F710 guidelines for the preparation of concrete slabs to receive resilient flooring.

J. Refer to ACI 302.2R "Guidelines for Concrete Slabs that Receive Moisture-Sensitive Flooring Materials" for concrete design and construction.

K. Concrete slab shall be fortified with continual steel reinforcement. Fiber reinforcement alone shall not be considered adequate fortification.

1.6 *WARRANTY*

A. Special Limited Warranty:
   1. Manufacturer's standard form in which manufacturer agrees to repair or replace sports flooring including labor that fails within specified warranty period.

B. Material warranty must be direct from the product manufacturer.
   1. Material warranties from separate or third party insurance providers are not valid.
   2. Material warranties must come from original manufacturer or division thereof. Private label warranties from distributors or brokers are not valid. Supply original point of manufacturing upon request.

C. Failures include, but are not limited to, the following:
   1. Material manufacturing defects.
   2. Surface wear and deterioration to the point of wear-through of wear layer per ASTM F410/ASTM F1303.
   3. Failure due to substrate moisture exposure exceeding 80 percent relative humidity when tested according to ASTM F2170.

D. Warranty Period:
   1. <u>For material defects and surface wear-through:</u> **15** years from date of substantial completion.

E. Installer's Limited Warranty:
   1. Installer's standard form in which installer agrees to repair or replace sports flooring that fails due to poor workmanship or faulty installation within the specified warranty period.
   2. Warranty Period: 2 years from date of substantial completion.

1.7 *ADDITIONAL MATERIALS*

A. Furnish to the owner additional materials containing a total of at least 1% of each different color or design of the indoor resilient athletic surfacing used on the project.

1.8 *LEED™ CERTIFICATION*

A. The indoor resilient athletic surfacing should be able to help this facility to achieve points towards *LEED™ certification.* Flooring system must be certified by FloorScore.
B. LEED categories positively affected by the indoor resilient athletic surfacing:

LEED™ V4 Credit		Contribution
Materials & Resources: Building Product Disclosure & Optimization (BPDO)		
MRc3: Sourcing of Raw Materials	Options 1 & 2	2 Points
MRc4: Material Ingredients	Option 1	1 Point
MRc5: Construction and Demolition Management	Reclamation and Recycling	ReStart® Program
Indoor Environmental Quality		
EQc2: Low-Emitting Materials	TVOC: 0.5 mg/m3 or less	FloorScore®

PART 2 - PRODUCTS

2.1 *MANUFACTURERS*

A. The basis of the design for the indoor resilient multipurpose surfacing is Omnisports 5.5 mm and Lumaflex Fit system as manufactured by Tarkett.
B. All other installation accessories and related components must be either made or approved by the indoor resilient athletic surfacing manufacturer.
C. Other products may be approved as equal if deemed qualified and submitted in accordance with the General Conditions.
D. Test reports confirming compliance from an independent sports laboratory must be provided along with samples, technical data, installation, maintenance, and warranty prior to acceptance as an alternative product.

2.2 *MATERIALS*

A. Omnisports 5.5 mm - Prefabricated sport surface 2.0 mm (0.08″) with wood flooring design and slightly textured embossed surface as supplied by Tarkett.
   1. Embossing of wood design and solid colors must be the same; varying embossing or surface textures will not be allowed.
   2. Printing of wood design shall closely resemble standard wood strip flooring in size, color, board length, and grain appearance.
   3. The wood design shall be protected by a clear layer of pure PVC (Polyvinyl Chloride) and TopClean xp, a factory-applied UV cured urethane treatment.
   4. Intermediate layers shall be fortified with a non-woven fiberglass grid for increased dimensional stability.
   5. The Lumaflex Fit System shall incorporate Lumaflex Fit double tongue and grooved multi-ply engineered panels, force reduction cushion, and appropriate vapor retarder.

B. Physical properties of the indoor resilient athletic surfacing shall conform to the following minimums:

Width	—	6′ 6″ (2 m)
Length	—	85′ (25.9m) approx.
Wear Layer	—	2 mm
Total Thickness	—	5.5 mm
Total Combined Thickness		48 mm (1.93″)
Wear Layer	Type 1– Grade 1	ASTM F1303/F410
Rolling Load	PASSED	0.30 (EN 1569 {11/1999})
Force Reduction	PASSED	ASTM F2772 Class 5
Surface Finish Effect	PASSED	ASTM F2772 (80 – 110)
Vertical Deformation	PASSED	ASTM F2772
Ball Rebound	PASSED	ASTM F2772 > 90%
Chemical Resistance	Excellent	ASTM F925
Impact Resistance	PASSED	EN 1717
Abrasion Resistance	PASSED	0.10 (EN ISO 5470-1 {06/1999})
Static Load Limit	PASSED	ASTM F970- Load 175 Lbs
Phthalate-free technology	—	YES
REACH Compliant	—	YES
Heavy Metals	—	NO
ISO 9001	—	YES
ISO 14001	—	YES

1. Color: As available from the indoor resilient athletic surfacing manufacturer's standard range.
2. Hardwood Design Series: A wood look design as available from the indoor resilient athletic surfacing manufacturer's standard range.
3. Texture: Texture to remain consistent between solid colors and wood design when blending colors.

C. Welding Rod: As supplied by the indoor resilient athletic surfacing manufacturer or supplier.
   1. Color to blend with the indoor resilient athletic surfacing color or design.
   2. All seams shall be welded to create a monolithic and impermeable surface.

D. Adhesive: As approved by the indoor resilient athletic surfacing manufacturer.

E. Game Line Paint and Primer: As approved by the indoor resilient athletic surfacing manufacturer.

PART 3 - EXECUTION

3.1 *EXAMINATION*

A. It is the responsibility of the general contractor/construction manager to ensure that project/site conditions are acceptable for the installation of the indoor resilient athletic flooring.
B. Verify that the area in which the indoor resilient athletic surfacing will be installed is dry and weather tight. Verify that permanent heat, light and ventilation are installed and operable.
C. Verify that all other work that could cause damage, dirt and dust or interrupt the normal pace of the indoor resilient athletic flooring installation is completed or suspended.
D. Verify that there is a stable room temperature of at least 65◦F.
E. Verify that there are no foreign materials or objects on the subfloor and that the subfloor is clean and ready for installation.
F. *Concrete Subfloor: moisture content less than 85% RH when tested per ASTM F2170.*
G. Follow Fieldturf USA, Inc. installation recommendations.
H. Do not average the results of the tests. Report all field test results in writing to the General Contractor, Architect, and End User prior to installation.
I. Verify that the concrete subfloor surface pH level is within the 7 - 11 range.
J. Document the results confirming the slab is within manufacturer's tolerances for slab deviation.

3.2 *PREPARATION OF SURFACES*

A. Sand the entire surface of the concrete slab.
B. Sweep the concrete slab so as to remove all dirt and dust. If a sweeping compound is to be used it must be a sweeping compound that does not contain oil or other items that may inhibit the adhesive bond.
C. Slab must be dust free. In the event that dust impairs adhesive bond, priming the slab prior to application of adhesive may be necessary. Follow installation guidelines.
D. Follow OSHA guidelines.

3.3 *INSTALLATION*

A. The installation area shall be closed to all traffic and activity for a period to be set by the indoor resilient athletic surfacing installer. The indoor resilient athletic surfacing installation shall not begin until the installer is familiar with the existing conditions.
B. All necessary precautions should be taken to minimize noise, smell, dust, the use of hazardous materials and any other items that may inconvenience others.
C. Install the indoor resilient athletic surfacing in strict accordance with the indoor resilient athletic surfacing manufacturer's written instructions.
D. Install the indoor resilient athletic surfacing minimizing cross seams. Provide a seam diagram during the submittal process for approval prior to installation. Vinyl Sheet Flooring Seams: Comply with ASTM F 1516. Rout joints and heat weld to permanently and seamlessly fuse sections together.
E. Paint game lines using approved game line paint primer and game line paint in strict accordance with the game line paint manufacturer's instructions.
F. Install appropriate threshold plates or transition strips where necessary.

2.0 *CLEANING*

A. Remove all unused materials, tools, and equipment and dispose of any debris properly. Clean the indoor resilient athletic surfacing in accordance with the manufacturer's instructions.

3.6 *PROTECTION*

A. If required, protect the indoor resilient athletic surfacing from damage using coverings approved by the manufacturer until acceptance of work by the customer or their authorized representative.

3.7 *RELATED STANDARDS AND GUIDELINES*

A. ASTM F2170 "Standard Test Method for Determining Relative Humidity In Concrete Floor Slabs Using In-Situ Probes"
B. ASTM F710 "Standard Practice for Preparing Concrete Floors to Receive Resilient Flooring"
C. ACI 302.2R-06 "Guideline for Concrete Slabs that Receive Moisture-Sensitive Flooring Materials"
D. ASTM F2772-11 "Standard Specification for Athletic Performance Properties of Indoor Sports Floor Systems"

END OF SECTION

SECTION 09 65 66
ARCHITECTURAL SPECIFICATIONS FOR INDOOR RESILIENT ATHLETIC SURFACING

PART 1 – GENERAL

1.1 *SECTION INCLUDES*

A. Supply and installation of the indoor resilient multipurpose surfacing
B. Application of the game lines
C. References for the correct construction and preparation of concrete slabs to receive resilient flooring.

1.2 *SUBMITTALS*

A. Product Data:
   1. Manufacturer's promotional brochures, specifications and installation instructions
B. Manufacturer Certifications:
   1. Provide certification that accurately identifies the Original Equipment Manufacturer (OEM) of flooring furnished for this project including manufacturer's name, address and factory location.
   2. Suppliers of private label flooring for this project must identify themselves as such and fully disclose the OEM information listed above.
   3. All "manufacturer" requirements in these specifications must be complied with by the OEM, including warranties, certifications, qualifications, product data, test results, environmental requirements, performance data, etc.
C. Samples:
   1. Submit for selection and approval three (3) sets of the indoor resilient multipurpose surfacing, manufacturer's brochures, samples or sample boards of all of the available colors, textures and styles.
   2. Submit color samples of all the available game line paint colors for selection and approval.
D. Closeout Submittals:
   1. Submit three (3) copies of the indoor resilient multipurpose surfacing and manufacturer's maintenance instructions.
   2. Submit three (3) copies of the material and installation warranties as specified.

1.3 *QUALITY ASSURANCE*

A. Qualifications:
   1. The indoor resilient multipurpose surfacing shall have been actively marketed for a minimum of ten (10) years.
   2. The indoor resilient multipurpose surfacing shall be manufactured in an ISO 9001 certified plant.
   3. The indoor resilient multipurpose surfacing shall be manufactured in an ISO 14001 certified plant.
   4. The indoor resilient multipurpose surfacing supplier shall be an established firm, experienced in the field, and competent in the techniques required by the manufacturer.
   5. The installer of the indoor resilient multipurpose surfacing shall have a minimum of five (5) years of experience in the field installing indoor resilient multipurpose surfacing and have worked on at least five (5) projects of similar size, type and complexity.

B. Certifications:
   1. Installer to submit the indoor resilient athletic surfacing manufacturer's certification attesting that they are a trained installer of the indoor resilient multipurpose surfacing.
   2. The indoor resilient multipurpose surfacing manufacturer to submit official ISO 9001 certification for the facility in which the indoor resilient multipurpose surfacing is manufactured.

C. Testing:
   1. Tests shall be relative for multi-purpose use with certificates from independent testing resources to be made available upon request.
   2. Test results shall be no more than 5 years old and performed according to ASTM standard testing procedures.

1.4 *DELIVERY, STORAGE AND HANDLING*

A. Delivery:
   Material shall not be delivered until all related work is in place and finished and/or proper storage facilities and conditions can be provided and guaranteed stable according to FieldTurf USA, Inc. recommendations.

B. Storage:
   1. Store the material in a secure, clean and dry location.
   2. Maintain temperature between 55° and 85° Fahrenheit.
   3. Store the indoor resilient athletic surfacing rolls in an upright position on a smooth flat surface immediately upon delivery to jobsite.
   4. Rolls shipped in rigid protective cardboard containers can be laid horizontally prior to unpacking and installation.

1.5 *PROJECT/SITE CONDITIONS*

A. It is the responsibility of the general contractor/construction manager to maintain project/site conditions acceptable for the installation of the indoor resilient multipurpose flooring.

B. The area in which the indoor resilient multipurpose surfacing will be installed shall be dry and weather tight. Permanent heat, light and ventilation shall be installed and operable.

C. All other trades shall have completed their work prior to the installation of the resilient athletic flooring. The general contractor or construction manager shall maintain a secure and clean working environment before, during and after the installation.

D. Maintain a stable room temperature of at least 65°F for a minimum of one (1) week prior to, during and thereafter installation.

E. An effective low-permeance vapor barrier is placed directly beneath the concrete subfloor. For "on" or "below grade" installations, it is recommended to provide a permanent vapor barrier resistant to long term hydrostatic pressure/moisture exposure. Protrusions should be sealed to prevent moisture migration into the slab. Moisture should not be allowed to enter the slab after the completed construction.

F. Concrete subfloor surface pH level within the 7 to 11 range dependent upon installation type.

G. Concrete subfloor should be no greater than 1/8" within a 10 ft diameter. This tolerance can be measured in accordance with ASTM E1155. A specified (F_F) of 50 and an (F_L) of 30 should reach this degree of floor flatness and floor level. There is no numerical correlation between F numbers and the deviation from the straight

edge. However, the above specified numbers should achieve a flat floor with minimal deviation in the slab. Reference ACI 117 and ACI 302.1R. The general contractor should provide a certificate of compliance with the above recommendations.

H. Concrete subfloor must be clean and free of all foreign materials or objects including, but not limited to, curing compounds and sealers.

I. Fill cracks, grooves, voids, depressions, and other minor imperfections. Follow the manufacturer's directions. Moveable joints must be treated utilizing specific transitioning joint devices depending upon the architect's recommendations. Follow current ASTM F710 guidelines for the preparation of concrete slabs to receive resilient flooring.

J. Refer to ACI 302.2R "Guidelines for Concrete Slabs that Receive Moisture-Sensitive Flooring Materials" for concrete design and construction.

K. Concrete slab shall be fortified with continual steel reinforcement. Fiber reinforcement alone shall not be considered adequate fortification.

1.6 *WARRANTY*

A. Special Limited Warranty:
   1. Manufacturer's standard form in which manufacturer agrees to repair or replace sports flooring including labor that fails within specified warranty period.

B. Material warranty must be direct from the product manufacturer.
   1. Material warranties from separate or third party insurance providers are not valid.
   2. Material warranties must come from original manufacturer or division thereof. Private label warranties from distributors or brokers are not valid. Supply original point of manufacturing upon request.

C. Failures include, but are not limited to, the following:
   1. Material manufacturing defects.
   2. Surface wear and deterioration to the point of wear-through of wear layer per ASTM F410/ASTM F1303.
   3. Failure due to substrate moisture exposure exceeding 80 percent relative humidity when tested according to ASTM F2170.

D. Warranty Period:
   1. <u>For material defects and surface wear-through:</u> **15** years from date of substantial completion.

E. Installer's Limited Warranty:
   1. Installer's standard form in which installer agrees to repair or replace sports flooring that fails due to poor workmanship or faulty installation within the specified warranty period.
   2. Warranty Period: 2 years from date of substantial completion.

1.7 *ADDITIONAL MATERIALS*

A. Furnish to the owner additional materials containing a total of at least 1% of each different color or design of the indoor resilient athletic surfacing used on the project.

1.8 *LEED™ CERTIFICATION*

A. The indoor resilient athletic surfacing should be able to help this facility to achieve points towards *LEED™ certification.* Flooring system must be certified by FloorScore.
B. LEED categories positively affected by the indoor resilient athletic surfacing:

LEED™ V4 Credit		Contribution
Materials & Resources: Building Product Disclosure & Optimization (BPDO)		
MRc3: Sourcing of Raw Materials	Options 1 & 2	2 Points
MRc4: Material Ingredients	Option 1	1 Point
MRc5: Construction and Demolition Management	Reclamation and Recycling	ReStart® Program
Indoor Environmental Quality		
EQc2: Low-Emitting Materials	TVOC: 0.5 mg/m3 or less	FloorScore®

PART 2 - PRODUCTS

2.1 *MANUFACTURERS*

A. The basis of the design for the indoor resilient multipurpose surfacing is Omnisports 5.5 mm and Lumaflex system as manufactured by Tarkett.
B. All other installation accessories and related components must be either made or approved by the indoor resilient athletic surfacing manufacturer.
C. Other products may be approved as equal if deemed qualified and submitted in accordance with the General Conditions.
D. Test reports confirming compliance from an independent sports laboratory must be provided along with samples, technical data, installation, maintenance, and warranty prior to acceptance as an alternative product.

2.2 *MATERIALS*

A. Omnisports 5.5 mm - Prefabricated sport surface 2.0 mm (0.08″) with wood flooring design and slightly textured embossed surface as supplied by Tarkett.
   1. Embossing of wood design and solid colors must be the same; varying embossing or surface textures will not be allowed.
   2. Printing of wood design shall closely resemble standard wood strip flooring in size, color, board length, and grain appearance.
   3. The wood design shall be protected by a clear layer of pure PVC (Polyvinyl Chloride) and TopClean xp, a factory-applied UV cured urethane treatment.
   4. Intermediate layers shall be fortified with a non-woven fiberglass grid for increased dimensional stability.
   5. The Lumaflex System shall incorporate Lumaflex double tongue and grooved multi-ply engineered panels, force reduction cushion, and appropriate vapor retarder.

B. Physical properties of the indoor resilient athletic surfacing shall conform to the following minimums:

Width	—	6′ 6″ (2 m)
Length	—	85′ (25.9m) approx.
Wear Layer	—	2 mm
Total Thickness	—	5.5 mm
Total Combined Thickness		1 7/16″ (35.7 mm approx.)
Wear Layer	Type 1– Grade 1	ASTM F1303/F410
Rolling Load	PASSED	0.30 (EN 1569 {11/1999})
Force Reduction	PASSED	ASTM F2772 Class 4
Surface Finish Effect	PASSED	ASTM F2772 (80 – 110)
Vertical Deformation	PASSED	ASTM F2772
Ball Rebound	PASSED	ASTM F2772 > 90%
Chemical Resistance	Excellent	ASTM F925
Impact Resistance	PASSED	EN 1717
Abrasion Resistance	PASSED	0.10 (EN ISO 5470-1 {06/1999})
Static Load Limit	PASSED	ASTM F970- Load 175 Lbs
Fire Rating	PASSED	ASTM E648 Class 1
Phthalate-free technology	—	YES
REACH Compliant	—	YES
Lumaflex Foam		GreenGuard Certified
Heavy Metals	—	NO
ISO 9001	—	YES
ISO 14001	—	YES

1. Color: As available from the indoor resilient athletic surfacing manufacturer's standard range.
2. Hardwood Design Series: A wood look design as available from the indoor resilient athletic surfacing manufacturer's standard range.
3. Texture: Texture to remain consistent between solid colors and wood design when blending colors.

C. Welding Rod: As supplied by the indoor resilient athletic surfacing manufacturer or supplier.
   1. Color to blend with the indoor resilient athletic surfacing color or design.
   2. All seams shall be welded to create a monolithic and impermeable surface.

D. Adhesive: As approved by the indoor resilient athletic surfacing manufacturer.

E. Game Line Paint and Primer: As approved by the indoor resilient athletic surfacing manufacturer.

PART 3 - EXECUTION

3.1 *EXAMINATION*

A. It is the responsibility of the general contractor/construction manager to ensure that project/site conditions are acceptable for the installation of the indoor resilient athletic flooring.
B. Verify that the area in which the indoor resilient athletic surfacing will be installed is dry and weather tight. Verify that permanent heat, light and ventilation are installed and operable.
C. Verify that all other work that could cause damage, dirt and dust or interrupt the normal pace of the indoor resilient athletic flooring installation is completed or suspended.
D. Verify that there is a stable room temperature of at least 65◦F.
E. Verify that there are no foreign materials or objects on the subfloor and that the subfloor is clean and ready for installation.
F. *Concrete Subfloor: moisture content less than 85% RH when tested per ASTM F2170.*
G. Follow Fieldturf USA, Inc. installation recommendations.
H. Do not average the results of the tests. Report all field test results in writing to the General Contractor, Architect, and End User prior to installation.
I. Verify that the concrete subfloor surface pH level is within the 7 - 11 range.
J. Document the results confirming the slab is within manufacturer's tolerances for slab deviation.

3.2 *PREPARATION OF SURFACES*

A. Sand the entire surface of the concrete slab.
B. Sweep the concrete slab so as to remove all dirt and dust. If a sweeping compound is to be used it must be a sweeping compound that does not contain oil or other items that may inhibit the adhesive bond.
C. Slab must be dust free. In the event that dust impairs adhesive bond, priming the slab prior to application of adhesive may be necessary. Follow installation guidelines.
D. Follow OSHA guidelines.

3.3 *INSTALLATION*

A. The installation area shall be closed to all traffic and activity for a period to be set by the indoor resilient athletic surfacing installer. The indoor resilient athletic surfacing installation shall not begin until the installer is familiar with the existing conditions.
B. All necessary precautions should be taken to minimize noise, smell, dust, the use of hazardous materials and any other items that may inconvenience others.
C. Install the indoor resilient athletic surfacing in strict accordance with the indoor resilient athletic surfacing manufacturer's written instructions.
D. Install the indoor resilient athletic surfacing minimizing cross seams. Provide a seam diagram during the submittal process for approval prior to installation. Vinyl Sheet Flooring Seams: Comply with ASTM F 1516. Rout joints and heat weld to permanently and seamlessly fuse sections together.
E. Paint game lines using approved game line paint primer and game line paint in strict accordance with the game line paint manufacturer's instructions.
F. Install appropriate threshold plates or transition strips where necessary.

2.0 *CLEANING*

A. Remove all unused materials, tools, and equipment and dispose of any debris properly. Clean the indoor resilient athletic surfacing in accordance with the manufacturer's instructions.

3.6 *PROTECTION*

A. If required, protect the indoor resilient athletic surfacing from damage using coverings approved by the manufacturer until acceptance of work by the customer or their authorized representative.

3.7 *RELATED STANDARDS AND GUIDELINES*

A. ASTM F2170 "Standard Test Method for Determining Relative Humidity In Concrete Floor Slabs Using In-Situ Probes"
B. ASTM F710 "Standard Practice for Preparing Concrete Floors to Receive Resilient Flooring"
C. ACI 302.2R-06 "Guideline for Concrete Slabs that Receive Moisture-Sensitive Flooring Materials"
D. ASTM F2772-11 "Standard Specification for Athletic Performance Properties of Indoor Sports Floor Systems"

END OF SECTION

SECTION 09 65 66
ARCHITECTURAL SPECIFICATIONS FOR INDOOR RESILIENT ATHLETIC SURFACING

PART 1 – GENERAL

1.1 *SECTION INCLUDES*

A. Supply and installation of the indoor resilient multipurpose surfacing
B. Application of the game lines
C. References for the correct construction and preparation of concrete slabs to receive resilient flooring.

1.2 *SUBMITTALS*

A. Product Data:
   1. Manufacturer's promotional brochures, specifications and installation instructions
B. Manufacturer Certifications:
   1. Provide certification that accurately identifies the Original Equipment Manufacturer (OEM) of flooring furnished for this project including manufacturer's name, address and factory location.
   2. Suppliers of private label flooring for this project must identify themselves as such and fully disclose the OEM information listed above.
   3. All "manufacturer" requirements in these specifications must be complied with by the OEM, including warranties, certifications, qualifications, product data, test results, environmental requirements, performance data, etc.
C. Samples:
   1. Submit for selection and approval three (3) sets of the indoor resilient multipurpose surfacing, manufacturer's brochures, samples or sample boards of all of the available colors, textures and styles.
   2. Submit color samples of all the available game line paint colors for selection and approval.
D. Closeout Submittals:
   1. Submit three (3) copies of the indoor resilient multipurpose surfacing and manufacturer's maintenance instructions.
   2. Submit three (3) copies of the material and installation warranties as specified.

1.3 *QUALITY ASSURANCE*

A. Qualifications:
   1. The indoor resilient multipurpose surfacing shall have been actively marketed for a minimum of ten (10) years.
   2. The indoor resilient multipurpose surfacing shall be manufactured in an ISO 9001 certified plant.
   3. The indoor resilient multipurpose surfacing shall be manufactured in an ISO 14001 certified plant.
   4. The indoor resilient multipurpose surfacing supplier shall be an established firm, experienced in the field, and competent in the techniques required by the manufacturer.
   5. The installer of the indoor resilient multipurpose surfacing shall have a minimum of five (5) years of experience in the field installing indoor resilient multipurpose surfacing and have worked on at least five (5) projects of similar size, type and complexity.

B. Certifications:
   1. Installer to submit the indoor resilient athletic surfacing manufacturer's certification attesting that they are a trained installer of the indoor resilient multipurpose surfacing.
   2. The indoor resilient multipurpose surfacing manufacturer to submit official ISO 9001 certification for the facility in which the indoor resilient multipurpose surfacing is manufactured.

C. Testing:
   1. Tests shall be relative for multi-purpose use with certificates from independent testing resources to be made available upon request.
   2. Test results shall be no more than 5 years old and performed according to ASTM standard testing procedures.

1.4 *DELIVERY, STORAGE AND HANDLING*

A. Delivery:
   Material shall not be delivered until all related work is in place and finished and/or proper storage facilities and conditions can be provided and guaranteed stable according to FieldTurf USA, Inc. recommendations.

B. Storage:
   1. Store the material in a secure, clean and dry location.
   2. Maintain temperature between 55° and 85° Fahrenheit.
   3. Store the indoor resilient athletic surfacing rolls in an upright position on a smooth flat surface immediately upon delivery to jobsite.
   4. Rolls shipped in rigid protective cardboard containers can be laid horizontally prior to unpacking and installation.

1.5 *PROJECT/SITE CONDITIONS*

A. It is the responsibility of the general contractor/construction manager to maintain project/site conditions acceptable for the installation of the indoor resilient multipurpose flooring.

B. The area in which the indoor resilient multipurpose surfacing will be installed shall be dry and weather tight. Permanent heat, light and ventilation shall be installed and operable.

C. All other trades shall have completed their work prior to the installation of the resilient athletic flooring. The general contractor or construction manager shall maintain a secure and clean working environment before, during and after the installation.

D. Maintain a stable room temperature of at least 65°F for a minimum of one (1) week prior to, during and thereafter installation.

E. An effective low-permeance vapor barrier is placed directly beneath the concrete subfloor. For "on" or "below grade" installations, it is recommended to provide a permanent vapor barrier resistant to long term hydrostatic pressure/moisture exposure. Protrusions should be sealed to prevent moisture migration into the slab. Moisture should not be allowed to enter the slab after the completed construction.

F. Concrete subfloor surface pH level within the 7 to 11 range dependent upon installation type.

G. Concrete subfloor should be no greater than 1/8" within a 10 ft diameter. This tolerance can be measured in accordance with ASTM E1155. A specified (F_F) of 50 and an (F_L) of 30 should reach this degree of floor flatness and floor level. There is no numerical correlation between F numbers and the deviation from the straight

edge. However, the above specified numbers should achieve a flat floor with minimal deviation in the slab. Reference ACI 117 and ACI 302.1R. The general contractor should provide a certificate of compliance with the above recommendations.

H. Concrete subfloor must be clean and free of all foreign materials or objects including, but not limited to, curing compounds and sealers.

I. Fill cracks, grooves, voids, depressions, and other minor imperfections. Follow the manufacturer's directions. Moveable joints must be treated utilizing specific transitioning joint devices depending upon the architect's recommendations. Follow current ASTM F710 guidelines for the preparation of concrete slabs to receive resilient flooring.

J. Refer to ACI 302.2R "Guidelines for Concrete Slabs that Receive Moisture-Sensitive Flooring Materials" for concrete design and construction.

K. Concrete slab shall be fortified with continual steel reinforcement. Fiber reinforcement alone shall not be considered adequate fortification.

1.6 *WARRANTY*

A. Special Limited Warranty:
   1. Manufacturer's standard form in which manufacturer agrees to repair or replace sports flooring including labor that fails within specified warranty period.

B. Material warranty must be direct from the product manufacturer.
   1. Material warranties from separate or third party insurance providers are not valid.
   2. Material warranties must come from original manufacturer or division thereof. Private label warranties from distributors or brokers are not valid. Supply original point of manufacturing upon request.

C. Failures include, but are not limited to, the following:
   1. Material manufacturing defects.
   2. Surface wear and deterioration to the point of wear-through of wear layer per ASTM F410/ASTM F1303.
   3. Failure due to substrate moisture exposure exceeding 80 percent relative humidity when tested according to ASTM F2170.

D. Warranty Period:
   1. <u>For material defects and surface wear-through:</u> **15** years from date of substantial completion.

E. Installer's Limited Warranty:
   1. Installer's standard form in which installer agrees to repair or replace sports flooring that fails due to poor workmanship or faulty installation within the specified warranty period.
   2. Warranty Period: 2 years from date of substantial completion.

1.7 *ADDITIONAL MATERIALS*

A. Furnish to the owner additional materials containing a total of at least 1% of each different color or design of the indoor resilient athletic surfacing used on the project.

1.8 *LEED™ CERTIFICATION*

A. The indoor resilient athletic surfacing should be able to help this facility to achieve points towards *LEED™ certification.* Flooring system must be certified by FloorScore.
B. LEED categories positively affected by the indoor resilient athletic surfacing:

LEED™ V4 Credit		Contribution
Materials & Resources: Building Product Disclosure & Optimization (BPDO)		
MRc3: Sourcing of Raw Materials	Options 1 & 2	2 Points
MRc4: Material Ingredients	Option 1	1 Point
MRc5: Construction and Demolition Management	Reclamation and Recycling	ReStart® Program
Indoor Environmental Quality		
EQc2: Low-Emitting Materials	TVOC: 0.5 mg/m3 or less	FloorScore®

PART 2 - PRODUCTS

2.1 *MANUFACTURERS*

A. The basis of the design for the indoor resilient multipurpose surfacing is Omnisports 7.1 mm and Lumaflex Elite system as manufactured by Tarkett.
B. All other installation accessories and related components must be either made or approved by the indoor resilient athletic surfacing manufacturer.
C. Other products may be approved as equal if deemed qualified and submitted in accordance with the General Conditions.
D. Test reports confirming compliance from an independent sports laboratory must be provided along with samples, technical data, installation, maintenance, and warranty prior to acceptance as an alternative product.

2.2 *MATERIALS*

A. Omnisports 7.1 mm - Prefabricated sport surface 2.0 mm (0.08″) with wood flooring design and slightly textured embossed surface as supplied by Tarkett.
   1. Embossing of wood design and solid colors must be the same; varying embossing or surface textures will not be allowed.
   2. Printing of wood design shall closely resemble standard wood strip flooring in size, color, board length, and grain appearance.
   3. The wood design shall be protected by a clear layer of pure PVC (Polyvinyl Chloride) and TopClean xp, a factory-applied UV cured urethane treatment.
   4. Intermediate layers shall be fortified with a non-woven fiberglass grid for increased dimensional stability.
   5. The Lumaflex Elite System shall incorporate Lumaflex Elite double tongue and grooved multi-ply engineered panels, force reduction cushion, and appropriate vapor retarder.

B. Physical properties of the indoor resilient athletic surfacing shall conform to the following minimums:

Width	—	6′ 6″ (2 m)
Length	—	85′ (25.9m) approx.
Wear Layer	—	2 mm
Total Thickness	—	7.1 mm
Total Combined Thickness		1 1/2″ (37.1 mm approx.)
Wear Layer	Type 1– Grade 1	ASTM F1303/F410
Rolling Load	PASSED	0.30 (EN 1569 {11/1999})
Force Reduction	PASSED	ASTM F2772 Class 5
Surface Finish Effect	PASSED	ASTM F2772 (80 – 110)
Vertical Deformation	PASSED	ASTM F2772
Ball Rebound	PASSED	ASTM F2772 > 90%
Chemical Resistance	Excellent	ASTM F925
Impact Resistance	PASSED	EN 1717
Abrasion Resistance	PASSED	0.10 (EN ISO 5470-1 {06/1999})
Static Load Limit	PASSED	ASTM F970- Load 175 Lbs
Phthalate-free technology	—	YES
REACH Compliant	—	YES
Heavy Metals	—	NO
ISO 9001	—	YES
ISO 14001	—	YES

1. Color: As available from the indoor resilient athletic surfacing manufacturer's standard range.
2. Hardwood Design Series: A wood look design as available from the indoor resilient athletic surfacing manufacturer's standard range.
3. Texture: Texture to remain consistent between solid colors and wood design when blending colors.

C. Welding Rod: As supplied by the indoor resilient athletic surfacing manufacturer or supplier.
   1. Color to blend with the indoor resilient athletic surfacing color or design.
   2. All seams shall be welded to create a monolithic and impermeable surface.

D. Adhesive: As approved by the indoor resilient athletic surfacing manufacturer.

E. Game Line Paint and Primer: As approved by the indoor resilient athletic surfacing manufacturer.

PART 3 - EXECUTION

3.1 *EXAMINATION*

A. It is the responsibility of the general contractor/construction manager to ensure that project/site conditions are acceptable for the installation of the indoor resilient athletic flooring.
B. Verify that the area in which the indoor resilient athletic surfacing will be installed is dry and weather tight. Verify that permanent heat, light and ventilation are installed and operable.
C. Verify that all other work that could cause damage, dirt and dust or interrupt the normal pace of the indoor resilient athletic flooring installation is completed or suspended.
D. Verify that there is a stable room temperature of at least 65◦F.
E. Verify that there are no foreign materials or objects on the subfloor and that the subfloor is clean and ready for installation.
F. *Concrete Subfloor: moisture content less than 85% RH when tested per ASTM F2170.*
G. Follow Fieldturf USA, Inc. installation recommendations.
H. Do not average the results of the tests. Report all field test results in writing to the General Contractor, Architect, and End User prior to installation.
I. Verify that the concrete subfloor surface pH level is within the 7 - 11 range.
J. Document the results confirming the slab is within manufacturer's tolerances for slab deviation.

3.2 *PREPARATION OF SURFACES*

A. Sand the entire surface of the concrete slab.
B. Sweep the concrete slab so as to remove all dirt and dust. If a sweeping compound is to be used it must be a sweeping compound that does not contain oil or other items that may inhibit the adhesive bond.
C. Slab must be dust free. In the event that dust impairs adhesive bond, priming the slab prior to application of adhesive may be necessary. Follow installation guidelines.
D. Follow OSHA guidelines.

3.3 *INSTALLATION*

A. The installation area shall be closed to all traffic and activity for a period to be set by the indoor resilient athletic surfacing installer. The indoor resilient athletic surfacing installation shall not begin until the installer is familiar with the existing conditions.
B. All necessary precautions should be taken to minimize noise, smell, dust, the use of hazardous materials and any other items that may inconvenience others.
C. Install the indoor resilient athletic surfacing in strict accordance with the indoor resilient athletic surfacing manufacturer's written instructions.
D. Install the indoor resilient athletic surfacing minimizing cross seams. Provide a seam diagram during the submittal process for approval prior to installation. Vinyl Sheet Flooring Seams: Comply with ASTM F 1516. Rout joints and heat weld to permanently and seamlessly fuse sections together.
E. Paint game lines using approved game line paint primer and game line paint in strict accordance with the game line paint manufacturer's instructions.
F. Install appropriate threshold plates or transition strips where necessary.

2.0 *CLEANING*

A. Remove all unused materials, tools, and equipment and dispose of any debris properly. Clean the indoor resilient athletic surfacing in accordance with the manufacturer's instructions.

3.6 *PROTECTION*

A. If required, protect the indoor resilient athletic surfacing from damage using coverings approved by the manufacturer until acceptance of work by the customer or their authorized representative.

3.7 *RELATED STANDARDS AND GUIDELINES*

A. ASTM F2170 "Standard Test Method for Determining Relative Humidity In Concrete Floor Slabs Using In-Situ Probes"
B. ASTM F710 "Standard Practice for Preparing Concrete Floors to Receive Resilient Flooring"
C. ACI 302.2R-06 "Guideline for Concrete Slabs that Receive Moisture-Sensitive Flooring Materials"
D. ASTM F2772-11 "Standard Specification for Athletic Performance Properties of Indoor Sports Floor Systems"

END OF SECTION

SECTION 09 65 66
ARCHITECTURAL SPECIFICATIONS FOR INDOOR RESILIENT ATHLETIC SURFACING

PART 1 – GENERAL

1.1 *SECTION INCLUDES*

A. Supply and installation of the indoor resilient multipurpose surfacing
B. Application of the game lines
C. References for the correct construction and preparation of concrete slabs to receive resilient flooring.

1.2 *SUBMITTALS*

A. Product Data:
   1. Manufacturer's promotional brochures, specifications and installation instructions
B. Manufacturer Certifications:
   1. Provide certification that accurately identifies the Original Equipment Manufacturer (OEM) of flooring furnished for this project including manufacturer's name, address and factory location.
   2. Suppliers of private label flooring for this project must identify themselves as such and fully disclose the OEM information listed above.
   3. All "manufacturer" requirements in these specifications must be complied with by the OEM, including warranties, certifications, qualifications, product data, test results, environmental requirements, performance data, etc.
C. Samples:
   1. Submit for selection and approval three (3) sets of the indoor resilient multipurpose surfacing, manufacturer's brochures, samples or sample boards of all of the available colors, textures and styles.
   2. Submit color samples of all the available game line paint colors for selection and approval.
D. Closeout Submittals:
   1. Submit three (3) copies of the indoor resilient multipurpose surfacing and manufacturer's maintenance instructions.
   2. Submit three (3) copies of the material and installation warranties as specified.

1.3 *QUALITY ASSURANCE*

A. Qualifications:
   1. The indoor resilient multipurpose surfacing shall have been actively marketed for a minimum of ten (10) years.
   2. The indoor resilient multipurpose surfacing shall be manufactured in an ISO 9001 certified plant.
   3. The indoor resilient multipurpose surfacing shall be manufactured in an ISO 14001 certified plant.
   4. The indoor resilient multipurpose surfacing supplier shall be an established firm, experienced in the field, and competent in the techniques required by the manufacturer.
   5. The installer of the indoor resilient multipurpose surfacing shall have a minimum of five (5) years of experience in the field installing indoor resilient multipurpose surfacing and have worked on at least five (5) projects of similar size, type and complexity.

B. Certifications:
   1. Installer to submit the indoor resilient athletic surfacing manufacturer's certification attesting that they are a trained installer of the indoor resilient multipurpose surfacing.
   2. The indoor resilient multipurpose surfacing manufacturer to submit official ISO 9001 certification for the facility in which the indoor resilient multipurpose surfacing is manufactured.

C. Testing:
   1. Tests shall be relative for multi-purpose use with certificates from independent testing resources to be made available upon request.
   2. Test results shall be no more than 5 years old and performed according to ASTM standard testing procedures.

1.4 *DELIVERY, STORAGE AND HANDLING*

A. Delivery:
   Material shall not be delivered until all related work is in place and finished and/or proper storage facilities and conditions can be provided and guaranteed stable according to FieldTurf USA, Inc. recommendations.

B. Storage:
   1. Store the material in a secure, clean and dry location.
   2. Maintain temperature between 55° and 85° Fahrenheit.
   3. Store the indoor resilient athletic surfacing rolls in an upright position on a smooth flat surface immediately upon delivery to jobsite.
   4. Rolls shipped in rigid protective cardboard containers can be laid horizontally prior to unpacking and installation.

1.5 *PROJECT/SITE CONDITIONS*

A. It is the responsibility of the general contractor/construction manager to maintain project/site conditions acceptable for the installation of the indoor resilient multipurpose flooring.

B. The area in which the indoor resilient multipurpose surfacing will be installed shall be dry and weather tight. Permanent heat, light and ventilation shall be installed and operable.

C. All other trades shall have completed their work prior to the installation of the resilient athletic flooring. The general contractor or construction manager shall maintain a secure and clean working environment before, during and after the installation.

D. Maintain a stable room temperature of at least 65°F for a minimum of one (1) week prior to, during and thereafter installation.

E. An effective low-permeance vapor barrier is placed directly beneath the concrete subfloor. For "on" or "below grade" installations, it is recommended to provide a permanent vapor barrier resistant to long term hydrostatic pressure/moisture exposure. Protrusions should be sealed to prevent moisture migration into the slab. Moisture should not be allowed to enter the slab after the completed construction.

F. Concrete subfloor surface pH level within the 7 to 11 range dependent upon installation type.

G. Concrete subfloor should be no greater than 1/8" within a 10 ft diameter. This tolerance can be measured in accordance with ASTM E1155. A specified (F_F) of 50 and an (F_L) of 30 should reach this degree of floor flatness and floor level. There is no numerical correlation between F numbers and the deviation from the straight

edge. However, the above specified numbers should achieve a flat floor with minimal deviation in the slab. Reference ACI 117 and ACI 302.1R. The general contractor should provide a certificate of compliance with the above recommendations.

H. Concrete subfloor must be clean and free of all foreign materials or objects including, but not limited to, curing compounds and sealers.

I. Fill cracks, grooves, voids, depressions, and other minor imperfections. Follow the manufacturer's directions. Moveable joints must be treated utilizing specific transitioning joint devices depending upon the architect's recommendations. Follow current ASTM F710 guidelines for the preparation of concrete slabs to receive resilient flooring.

J. Refer to ACI 302.2R "Guidelines for Concrete Slabs that Receive Moisture-Sensitive Flooring Materials" for concrete design and construction.

K. Concrete slab shall be fortified with continual steel reinforcement. Fiber reinforcement alone shall not be considered adequate fortification.

1.6 *WARRANTY*

A. Special Limited Warranty:
   1. Manufacturer's standard form in which manufacturer agrees to repair or replace sports flooring including labor that fails within specified warranty period.

B. Material warranty must be direct from the product manufacturer.
   1. Material warranties from separate or third party insurance providers are not valid.
   2. Material warranties must come from original manufacturer or division thereof. Private label warranties from distributors or brokers are not valid. Supply original point of manufacturing upon request.

C. Failures include, but are not limited to, the following:
   1. Material manufacturing defects.
   2. Surface wear and deterioration to the point of wear-through of wear layer per ASTM F410/ASTM F1303.
   3. Failure due to substrate moisture exposure exceeding 80 percent relative humidity when tested according to ASTM F2170.

D. Warranty Period:
   1. <u>For material defects and surface wear-through:</u> **15** years from date of substantial completion.

E. Installer's Limited Warranty:
   1. Installer's standard form in which installer agrees to repair or replace sports flooring that fails due to poor workmanship or faulty installation within the specified warranty period.
   2. Warranty Period: 2 years from date of substantial completion.

1.7 *ADDITIONAL MATERIALS*

A. Furnish to the owner additional materials containing a total of at least 1% of each different color or design of the indoor resilient athletic surfacing used on the project.

1.8 *LEED™ CERTIFICATION*

A. The indoor resilient athletic surfacing should be able to help this facility to achieve points towards *LEED™ certification.* Flooring system must be certified by FloorScore.
B. LEED categories positively affected by the indoor resilient athletic surfacing:

LEED™ V4 Credit		Contribution
Materials & Resources: Building Product Disclosure & Optimization (BPDO)		
MRc3: Sourcing of Raw Materials	Options 1 & 2	2 Points
MRc4: Material Ingredients	Option 1	1 Point
MRc5: Construction and Demolition Management	Reclamation and Recycling	ReStart® Program
Indoor Environmental Quality		
EQc2: Low-Emitting Materials	TVOC: 0.5 mg/m3 or less	FloorScore®

PART 2 - PRODUCTS

2.1 *MANUFACTURERS*

A. The basis of the design for the indoor resilient multipurpose surfacing is Omnisports 7.1 mm and Lumaflex Fit system as manufactured by Tarkett.
B. All other installation accessories and related components must be either made or approved by the indoor resilient athletic surfacing manufacturer.
C. Other products may be approved as equal if deemed qualified and submitted in accordance with the General Conditions.
D. Test reports confirming compliance from an independent sports laboratory must be provided along with samples, technical data, installation, maintenance, and warranty prior to acceptance as an alternative product.

2.2 *MATERIALS*

A. Omnisports 7.1 mm - Prefabricated sport surface 2.0 mm (0.08″) with wood flooring design and slightly textured embossed surface as supplied by Tarkett.
   1. Embossing of wood design and solid colors must be the same; varying embossing or surface textures will not be allowed.
   2. Printing of wood design shall closely resemble standard wood strip flooring in size, color, board length, and grain appearance.
   3. The wood design shall be protected by a clear layer of pure PVC (Polyvinyl Chloride) and TopClean xp, a factory-applied UV cured urethane treatment.
   4. Intermediate layers shall be fortified with a non-woven fiberglass grid for increased dimensional stability.
   5. The Lumaflex Fit System shall incorporate Lumaflex Fit double tongue and grooved multi-ply engineered panels, force reduction cushion, and appropriate vapor retarder.

B. Physical properties of the indoor resilient athletic surfacing shall conform to the following minimums:

Width	—	6′ 6″ (2 m)
Length	—	85′ (25.9m) approx.
Wear Layer	—	2 mm
Total Thickness	—	7.1 mm
Total Combined Thickness		51mm (2″)
Wear Layer	Type 1– Grade 1	ASTM F1303/F410
Rolling Load	PASSED	0.30 (EN 1569 {11/1999})
Force Reduction	PASSED	ASTM F2772 Class 5
Surface Finish Effect	PASSED	ASTM F2772 (80 – 110)
Vertical Deformation	PASSED	ASTM F2772
Ball Rebound	PASSED	ASTM F2772 > 90%
Chemical Resistance	Excellent	ASTM F925
Impact Resistance	PASSED	EN 1717
Abrasion Resistance	PASSED	0.10 (EN ISO 5470-1 {06/1999})
Static Load Limit	PASSED	ASTM F970- Load 175 Lbs
Phthalate-free technology	—	YES
REACH Compliant	—	YES
Heavy Metals	—	NO
ISO 9001	—	YES
ISO 14001	—	YES

1. Color: As available from the indoor resilient athletic surfacing manufacturer's standard range.
2. Hardwood Design Series: A wood look design as available from the indoor resilient athletic surfacing manufacturer's standard range.
3. Texture: Texture to remain consistent between solid colors and wood design when blending colors.

C. Welding Rod: As supplied by the indoor resilient athletic surfacing manufacturer or supplier.
   1. Color to blend with the indoor resilient athletic surfacing color or design.
   2. All seams shall be welded to create a monolithic and impermeable surface.

D. Adhesive: As approved by the indoor resilient athletic surfacing manufacturer.

E. Game Line Paint and Primer: As approved by the indoor resilient athletic surfacing manufacturer.

PART 3 - EXECUTION

3.1 *EXAMINATION*

A. It is the responsibility of the general contractor/construction manager to ensure that project/site conditions are acceptable for the installation of the indoor resilient athletic flooring.
B. Verify that the area in which the indoor resilient athletic surfacing will be installed is dry and weather tight. Verify that permanent heat, light and ventilation are installed and operable.
C. Verify that all other work that could cause damage, dirt and dust or interrupt the normal pace of the indoor resilient athletic flooring installation is completed or suspended.
D. Verify that there is a stable room temperature of at least 65◦F.
E. Verify that there are no foreign materials or objects on the subfloor and that the subfloor is clean and ready for installation.
F. *Concrete Subfloor: moisture content less than 85% RH when tested per ASTM F2170.*
G. Follow Fieldturf USA, Inc. installation recommendations.
H. Do not average the results of the tests. Report all field test results in writing to the General Contractor, Architect, and End User prior to installation.
I. Verify that the concrete subfloor surface pH level is within the 7 - 11 range.
J. Document the results confirming the slab is within manufacturer's tolerances for slab deviation.

3.2 *PREPARATION OF SURFACES*

A. Sand the entire surface of the concrete slab.
B. Sweep the concrete slab so as to remove all dirt and dust. If a sweeping compound is to be used it must be a sweeping compound that does not contain oil or other items that may inhibit the adhesive bond.
C. Slab must be dust free. In the event that dust impairs adhesive bond, priming the slab prior to application of adhesive may be necessary. Follow installation guidelines.
D. Follow OSHA guidelines.

3.3 *INSTALLATION*

A. The installation area shall be closed to all traffic and activity for a period to be set by the indoor resilient athletic surfacing installer. The indoor resilient athletic surfacing installation shall not begin until the installer is familiar with the existing conditions.
B. All necessary precautions should be taken to minimize noise, smell, dust, the use of hazardous materials and any other items that may inconvenience others.
C. Install the indoor resilient athletic surfacing in strict accordance with the indoor resilient athletic surfacing manufacturer's written instructions.
D. Install the indoor resilient athletic surfacing minimizing cross seams. Provide a seam diagram during the submittal process for approval prior to installation. Vinyl Sheet Flooring Seams: Comply with ASTM F 1516. Rout joints and heat weld to permanently and seamlessly fuse sections together.
E. Paint game lines using approved game line paint primer and game line paint in strict accordance with the game line paint manufacturer's instructions.
F. Install appropriate threshold plates or transition strips where necessary.

2.0 *CLEANING*

A. Remove all unused materials, tools, and equipment and dispose of any debris properly. Clean the indoor resilient athletic surfacing in accordance with the manufacturer's instructions.

3.6 *PROTECTION*

A. If required, protect the indoor resilient athletic surfacing from damage using coverings approved by the manufacturer until acceptance of work by the customer or their authorized representative.

3.7 *RELATED STANDARDS AND GUIDELINES*

A. ASTM F2170 "Standard Test Method for Determining Relative Humidity In Concrete Floor Slabs Using In-Situ Probes"
B. ASTM F710 "Standard Practice for Preparing Concrete Floors to Receive Resilient Flooring"
C. ACI 302.2R-06 "Guideline for Concrete Slabs that Receive Moisture-Sensitive Flooring Materials"
D. ASTM F2772-11 "Standard Specification for Athletic Performance Properties of Indoor Sports Floor Systems"

END OF SECTION

SECTION 09 65 66
ARCHITECTURAL SPECIFICATIONS FOR INDOOR RESILIENT ATHLETIC SURFACING

PART 1 – GENERAL

1.1 *SECTION INCLUDES*

A. Supply and installation of the indoor resilient multipurpose surfacing
B. Application of the game lines
C. References for the correct construction and preparation of concrete slabs to receive resilient flooring.

1.2 *SUBMITTALS*

A. Product Data:
   1. Manufacturer's promotional brochures, specifications and installation instructions
B. Manufacturer Certifications:
   1. Provide certification that accurately identifies the Original Equipment Manufacturer (OEM) of flooring furnished for this project including manufacturer's name, address and factory location.
   2. Suppliers of private label flooring for this project must identify themselves as such and fully disclose the OEM information listed above.
   3. All "manufacturer" requirements in these specifications must be complied with by the OEM, including warranties, certifications, qualifications, product data, test results, environmental requirements, performance data, etc.
C. Samples:
   1. Submit for selection and approval three (3) sets of the indoor resilient multipurpose surfacing, manufacturer's brochures, samples or sample boards of all of the available colors, textures and styles.
   2. Submit color samples of all the available game line paint colors for selection and approval.
D. Closeout Submittals:
   1. Submit three (3) copies of the indoor resilient multipurpose surfacing and manufacturer's maintenance instructions.
   2. Submit three (3) copies of the material and installation warranties as specified.

1.3 *QUALITY ASSURANCE*

A. Qualifications:
   1. The indoor resilient multipurpose surfacing shall have been actively marketed for a minimum of ten (10) years.
   2. The indoor resilient multipurpose surfacing shall be manufactured in an ISO 9001 certified plant.
   3. The indoor resilient multipurpose surfacing shall be manufactured in an ISO 14001 certified plant.
   4. The indoor resilient multipurpose surfacing supplier shall be an established firm, experienced in the field, and competent in the techniques required by the manufacturer.
   5. The installer of the indoor resilient multipurpose surfacing shall have a minimum of five (5) years of experience in the field installing indoor resilient multipurpose surfacing and have worked on at least five (5) projects of similar size, type and complexity.

B. Certifications:
   1. Installer to submit the indoor resilient athletic surfacing manufacturer's certification attesting that they are a trained installer of the indoor resilient multipurpose surfacing.
   2. The indoor resilient multipurpose surfacing manufacturer to submit official ISO 9001 certification for the facility in which the indoor resilient multipurpose surfacing is manufactured.

C. Testing:
   1. Tests shall be relative for multi-purpose use with certificates from independent testing resources to be made available upon request.
   2. Test results shall be no more than 5 years old and performed according to ASTM standard testing procedures.

1.4 *DELIVERY, STORAGE AND HANDLING*

A. Delivery:
   Material shall not be delivered until all related work is in place and finished and/or proper storage facilities and conditions can be provided and guaranteed stable according to FieldTurf USA, Inc. recommendations.

B. Storage:
   1. Store the material in a secure, clean and dry location.
   2. Maintain temperature between 55° and 85° Fahrenheit.
   3. Store the indoor resilient athletic surfacing rolls in an upright position on a smooth flat surface immediately upon delivery to jobsite.
   4. Rolls shipped in rigid protective cardboard containers can be laid horizontally prior to unpacking and installation.

1.5 *PROJECT/SITE CONDITIONS*

A. It is the responsibility of the general contractor/construction manager to maintain project/site conditions acceptable for the installation of the indoor resilient multipurpose flooring.

B. The area in which the indoor resilient multipurpose surfacing will be installed shall be dry and weather tight. Permanent heat, light and ventilation shall be installed and operable.

C. All other trades shall have completed their work prior to the installation of the resilient athletic flooring. The general contractor or construction manager shall maintain a secure and clean working environment before, during and after the installation.

D. Maintain a stable room temperature of at least 65°F for a minimum of one (1) week prior to, during and thereafter installation.

E. An effective low-permeance vapor barrier is placed directly beneath the concrete subfloor. For "on" or "below grade" installations, it is recommended to provide a permanent vapor barrier resistant to long term hydrostatic pressure/moisture exposure. Protrusions should be sealed to prevent moisture migration into the slab. Moisture should not be allowed to enter the slab after the completed construction.

F. Concrete subfloor surface pH level within the 7 to 11 range dependent upon installation type.

G. Concrete subfloor should be no greater than 1/8" within a 10 ft diameter. This tolerance can be measured in accordance with ASTM E1155. A specified (F_F) of 50 and an (F_L) of 30 should reach this degree of floor flatness and floor level. There is no numerical correlation between F numbers and the deviation from the straight

edge. However, the above specified numbers should achieve a flat floor with minimal deviation in the slab. Reference ACI 117 and ACI 302.1R. The general contractor should provide a certificate of compliance with the above recommendations.

H. Concrete subfloor must be clean and free of all foreign materials or objects including, but not limited to, curing compounds and sealers.

I. Fill cracks, grooves, voids, depressions, and other minor imperfections. Follow the manufacturer's directions. Moveable joints must be treated utilizing specific transitioning joint devices depending upon the architect's recommendations. Follow current ASTM F710 guidelines for the preparation of concrete slabs to receive resilient flooring.

J. Refer to ACI 302.2R "Guidelines for Concrete Slabs that Receive Moisture-Sensitive Flooring Materials" for concrete design and construction.

K. Concrete slab shall be fortified with continual steel reinforcement. Fiber reinforcement alone shall not be considered adequate fortification.

1.6 *WARRANTY*

A. Special Limited Warranty:
   1. Manufacturer's standard form in which manufacturer agrees to repair or replace sports flooring including labor that fails within specified warranty period.

B. Material warranty must be direct from the product manufacturer.
   1. Material warranties from separate or third party insurance providers are not valid.
   2. Material warranties must come from original manufacturer or division thereof. Private label warranties from distributors or brokers are not valid. Supply original point of manufacturing upon request.

C. Failures include, but are not limited to, the following:
   1. Material manufacturing defects.
   2. Surface wear and deterioration to the point of wear-through of wear layer per ASTM F410/ASTM F1303.
   3. Failure due to substrate moisture exposure exceeding 80 percent relative humidity when tested according to ASTM F2170.

D. Warranty Period:
   1. <u>For material defects and surface wear-through:</u> **15** years from date of substantial completion.

E. Installer's Limited Warranty:
   1. Installer's standard form in which installer agrees to repair or replace sports flooring that fails due to poor workmanship or faulty installation within the specified warranty period.
   2. Warranty Period: 2 years from date of substantial completion.

1.7 *ADDITIONAL MATERIALS*

A. Furnish to the owner additional materials containing a total of at least 1% of each different color or design of the indoor resilient athletic surfacing used on the project.

1.8 *LEED™ CERTIFICATION*

A. The indoor resilient athletic surfacing should be able to help this facility to achieve points towards *LEED™ certification.* Flooring system must be certified by FloorScore.
B. LEED categories positively affected by the indoor resilient athletic surfacing:

LEED™ V4 Credit		Contribution
Materials & Resources: Building Product Disclosure & Optimization (BPDO)		
MRc3: Sourcing of Raw Materials	Options 1 & 2	2 Points
MRc4: Material Ingredients	Option 1	1 Point
MRc5: Construction and Demolition Management	Reclamation and Recycling	ReStart® Program
Indoor Environmental Quality		
EQc2: Low-Emitting Materials	TVOC: 0.5 mg/m3 or less	FloorScore®

PART 2 - PRODUCTS

2.1 *MANUFACTURERS*

A. The basis of the design for the indoor resilient multipurpose surfacing is Omnisports 7.1 mm and Lumaflex system as manufactured by Tarkett.
B. All other installation accessories and related components must be either made or approved by the indoor resilient athletic surfacing manufacturer.
C. Other products may be approved as equal if deemed qualified and submitted in accordance with the General Conditions.
D. Test reports confirming compliance from an independent sports laboratory must be provided along with samples, technical data, installation, maintenance, and warranty prior to acceptance as an alternative product.

2.2 *MATERIALS*

A. Omnisports 7.1 mm - Prefabricated sport surface 2.0 mm (0.08″) with wood flooring design and slightly textured embossed surface as supplied by Tarkett.
   1. Embossing of wood design and solid colors must be the same; varying embossing or surface textures will not be allowed.
   2. Printing of wood design shall closely resemble standard wood strip flooring in size, color, board length, and grain appearance.
   3. The wood design shall be protected by a clear layer of pure PVC (Polyvinyl Chloride) and TopClean xp, a factory-applied UV cured urethane treatment.
   4. Intermediate layers shall be fortified with a non-woven fiberglass grid for increased dimensional stability.
   5. The Lumaflex System shall incorporate Lumaflex double tongue and grooved multi-ply engineered panels, force reduction cushion, and appropriate vapor retarder.

B. Physical properties of the indoor resilient athletic surfacing shall conform to the following minimums:

Width	—	6′ 6″ (2 m)
Length	—	85′ (25.9m) approx.
Wear Layer	—	2 mm
Total Thickness	—	7.1 mm
Total Combined Thickness		1 1/2″ (37.1 mm approx.)
Wear Layer	Type 1– Grade 1	ASTM F1303/F410
Rolling Load	PASSED	0.30 (EN 1569 {11/1999})
Force Reduction	PASSED	ASTM F2772 Class 4
Surface Finish Effect	PASSED	ASTM F2772 (80 – 110)
Vertical Deformation	PASSED	ASTM F2772
Ball Rebound	PASSED	ASTM F2772 > 90%
Chemical Resistance	Excellent	ASTM F925
Impact Resistance	PASSED	EN 1717
Abrasion Resistance	PASSED	0.10 (EN ISO 5470-1 {06/1999})
Static Load Limit	PASSED	ASTM F970- Load 175 Lbs
Fire Rating	PASSED	ASTM E648 Class 1
Phthalate-free technology	—	YES
Lumaflex Foam		GreenGuard Certified
REACH Compliant	—	YES
Heavy Metals	—	NO
ISO 9001	—	YES
ISO 14001	—	YES

1. Color: As available from the indoor resilient athletic surfacing manufacturer's standard range.
2. Hardwood Design Series: A wood look design as available from the indoor resilient athletic surfacing manufacturer's standard range.
3. Texture: Texture to remain consistent between solid colors and wood design when blending colors.

C. Welding Rod: As supplied by the indoor resilient athletic surfacing manufacturer or supplier.
   1. Color to blend with the indoor resilient athletic surfacing color or design.
   2. All seams shall be welded to create a monolithic and impermeable surface.

D. Adhesive: As approved by the indoor resilient athletic surfacing manufacturer.

E. Game Line Paint and Primer: As approved by the indoor resilient athletic surfacing manufacturer.

PART 3 - EXECUTION

3.1 *EXAMINATION*

A. It is the responsibility of the general contractor/construction manager to ensure that project/site conditions are acceptable for the installation of the indoor resilient athletic flooring.
B. Verify that the area in which the indoor resilient athletic surfacing will be installed is dry and weather tight. Verify that permanent heat, light and ventilation are installed and operable.
C. Verify that all other work that could cause damage, dirt and dust or interrupt the normal pace of the indoor resilient athletic flooring installation is completed or suspended.
D. Verify that there is a stable room temperature of at least 65◦F.
E. Verify that there are no foreign materials or objects on the subfloor and that the subfloor is clean and ready for installation.
F. *Concrete Subfloor: moisture content less than 85% RH when tested per ASTM F2170.*
G. Follow Fieldturf USA, Inc. installation recommendations.
H. Do not average the results of the tests. Report all field test results in writing to the General Contractor, Architect, and End User prior to installation.
I. Verify that the concrete subfloor surface pH level is within the 7 - 11 range.
J. Document the results confirming the slab is within manufacturer's tolerances for slab deviation.

3.2 *PREPARATION OF SURFACES*

A. Sand the entire surface of the concrete slab.
B. Sweep the concrete slab so as to remove all dirt and dust. If a sweeping compound is to be used it must be a sweeping compound that does not contain oil or other items that may inhibit the adhesive bond.
C. Slab must be dust free. In the event that dust impairs adhesive bond, priming the slab prior to application of adhesive may be necessary. Follow installation guidelines.
D. Follow OSHA guidelines.

3.3 *INSTALLATION*

A. The installation area shall be closed to all traffic and activity for a period to be set by the indoor resilient athletic surfacing installer. The indoor resilient athletic surfacing installation shall not begin until the installer is familiar with the existing conditions.
B. All necessary precautions should be taken to minimize noise, smell, dust, the use of hazardous materials and any other items that may inconvenience others.
C. Install the indoor resilient athletic surfacing in strict accordance with the indoor resilient athletic surfacing manufacturer's written instructions.
D. Install the indoor resilient athletic surfacing minimizing cross seams. Provide a seam diagram during the submittal process for approval prior to installation. Vinyl Sheet Flooring Seams: Comply with ASTM F 1516. Rout joints and heat weld to permanently and seamlessly fuse sections together.
E. Paint game lines using approved game line paint primer and game line paint in strict accordance with the game line paint manufacturer's instructions.
F. Install appropriate threshold plates or transition strips where necessary.

2.0 *CLEANING*

A. Remove all unused materials, tools, and equipment and dispose of any debris properly. Clean the indoor resilient athletic surfacing in accordance with the manufacturer's instructions.

3.6 *PROTECTION*

A. If required, protect the indoor resilient athletic surfacing from damage using coverings approved by the manufacturer until acceptance of work by the customer or their authorized representative.

3.7 *RELATED STANDARDS AND GUIDELINES*

A. ASTM F2170 "Standard Test Method for Determining Relative Humidity In Concrete Floor Slabs Using In-Situ Probes"
B. ASTM F710 "Standard Practice for Preparing Concrete Floors to Receive Resilient Flooring"
C. ACI 302.2R-06 "Guideline for Concrete Slabs that Receive Moisture-Sensitive Flooring Materials"
D. ASTM F2772-11 "Standard Specification for Athletic Performance Properties of Indoor Sports Floor Systems"

END OF SECTION

SECTION 09 65 66
ARCHITECTURAL SPECIFICATIONS FOR INDOOR RESILIENT ATHLETIC SURFACING

PART 1 – GENERAL

1.1 *SECTION INCLUDES*

A. Supply and installation of the indoor resilient multipurpose surfacing
B. Application of the game lines
C. References for the correct construction and preparation of concrete slabs to receive resilient flooring.

1.2 *SUBMITTALS*

A. Product Data:
   1. Manufacturer's promotional brochures, specifications and installation instructions
B. Manufacturer Certifications:
   1. Provide certification that accurately identifies the Original Equipment Manufacturer (OEM) of flooring furnished for this project including manufacturer's name, address and factory location.
   2. Suppliers of private label flooring for this project must identify themselves as such and fully disclose the OEM information listed above.
   3. All "manufacturer" requirements in these specifications must be complied with by the OEM, including warranties, certifications, qualifications, product data, test results, environmental requirements, performance data, etc.
C. Samples:
   1. Submit for selection and approval three (3) sets of the indoor resilient multipurpose surfacing, manufacturer's brochures, samples or sample boards of all of the available colors, textures and styles.
   2. Submit color samples of all the available game line paint colors for selection and approval.
D. Closeout Submittals:
   1. Submit three (3) copies of the indoor resilient multipurpose surfacing and manufacturer's maintenance instructions.
   2. Submit three (3) copies of the material and installation warranties as specified.

1.3 *QUALITY ASSURANCE*

A. Qualifications:
   1. The indoor resilient multipurpose surfacing shall have been actively marketed for a minimum of ten (10) years.
   2. The indoor resilient multipurpose surfacing shall be manufactured in an ISO 9001 certified plant.
   3. The indoor resilient multipurpose surfacing shall be manufactured in an ISO 14001 certified plant.
   4. The indoor resilient multipurpose surfacing supplier shall be an established firm, experienced in the field, and competent in the techniques required by the manufacturer.
   5. The installer of the indoor resilient multipurpose surfacing shall have a minimum of five (5) years of experience in the field installing indoor resilient multipurpose surfacing and have worked on at least five (5) projects of similar size, type and complexity.

B. Certifications:
   1. Installer to submit the indoor resilient athletic surfacing manufacturer's certification attesting that they are a trained installer of the indoor resilient multipurpose surfacing.
   2. The indoor resilient multipurpose surfacing manufacturer to submit official ISO 9001 certification for the facility in which the indoor resilient multipurpose surfacing is manufactured.

C. Testing:
   1. Tests shall be relative for multi-purpose use with certificates from independent testing resources to be made available upon request.
   2. Test results shall be no more than 5 years old and performed according to ASTM standard testing procedures.

1.4 *DELIVERY, STORAGE AND HANDLING*

A. Delivery:
   Material shall not be delivered until all related work is in place and finished and/or proper storage facilities and conditions can be provided and guaranteed stable according to FieldTurf USA, Inc. recommendations.

B. Storage:
   1. Store the material in a secure, clean and dry location.
   2. Maintain temperature between 55° and 85° Fahrenheit.
   3. Store the indoor resilient athletic surfacing rolls in an upright position on a smooth flat surface immediately upon delivery to jobsite.
   4. Rolls shipped in rigid protective cardboard containers can be laid horizontally prior to unpacking and installation.

1.5 *PROJECT/SITE CONDITIONS*

A. It is the responsibility of the general contractor/construction manager to maintain project/site conditions acceptable for the installation of the indoor resilient multipurpose flooring.

B. The area in which the indoor resilient multipurpose surfacing will be installed shall be dry and weather tight. Permanent heat, light and ventilation shall be installed and operable.

C. All other trades shall have completed their work prior to the installation of the resilient athletic flooring. The general contractor or construction manager shall maintain a secure and clean working environment before, during and after the installation.

D. Maintain a stable room temperature of at least 65°F for a minimum of one (1) week prior to, during and thereafter installation.

E. An effective low-permeance vapor barrier is placed directly beneath the concrete subfloor. For "on" or "below grade" installations, it is recommended to provide a permanent vapor barrier resistant to long term hydrostatic pressure/moisture exposure. Protrusions should be sealed to prevent moisture migration into the slab. Moisture should not be allowed to enter the slab after the completed construction.

F. Concrete subfloor surface pH level within the 7 to 11 range dependent upon installation type.

G. Concrete subfloor should be no greater than 1/8" within a 10 ft diameter. This tolerance can be measured in accordance with ASTM E1155. A specified (F_F) of 50 and an (F_L) of 30 should reach this degree of floor flatness and floor level. There is no numerical correlation between F numbers and the deviation from the straight

edge. However, the above specified numbers should achieve a flat floor with minimal deviation in the slab. Reference ACI 117 and ACI 302.1R. The general contractor should provide a certificate of compliance with the above recommendations.

H. Concrete subfloor must be clean and free of all foreign materials or objects including, but not limited to, curing compounds and sealers.

I. Fill cracks, grooves, voids, depressions, and other minor imperfections. Follow the manufacturer's directions. Moveable joints must be treated utilizing specific transitioning joint devices depending upon the architect's recommendations. Follow current ASTM F710 guidelines for the preparation of concrete slabs to receive resilient flooring.

J. Refer to ACI 302.2R "Guidelines for Concrete Slabs that Receive Moisture-Sensitive Flooring Materials" for concrete design and construction.

K. Concrete slab shall be fortified with continual steel reinforcement. Fiber reinforcement alone shall not be considered adequate fortification.

1.6 *WARRANTY*

A. Special Limited Warranty:
   1. Manufacturer's standard form in which manufacturer agrees to repair or replace sports flooring including labor that fails within specified warranty period.

B. Material warranty must be direct from the product manufacturer.
   1. Material warranties from separate or third party insurance providers are not valid.
   2. Material warranties must come from original manufacturer or division thereof. Private label warranties from distributors or brokers are not valid. Supply original point of manufacturing upon request.

C. Failures include, but are not limited to, the following:
   1. Material manufacturing defects.
   2. Surface wear and deterioration to the point of wear-through of wear layer per ASTM F410/ASTM F1303.
   3. Failure due to substrate moisture exposure exceeding 80 percent relative humidity when tested according to ASTM F2170.

D. Warranty Period:
   1. <u>For material defects and surface wear-through:</u> **15** years from date of substantial completion.

E. Installer's Limited Warranty:
   1. Installer's standard form in which installer agrees to repair or replace sports flooring that fails due to poor workmanship or faulty installation within the specified warranty period.
   2. Warranty Period: 2 years from date of substantial completion.

1.7 *ADDITIONAL MATERIALS*

A. Furnish to the owner additional materials containing a total of at least 1% of each different color or design of the indoor resilient athletic surfacing used on the project.

1.8 *LEED™ CERTIFICATION*

A. The indoor resilient athletic surfacing should be able to help this facility to achieve points towards *LEED™ certification.* Flooring system must be certified by FloorScore.
B. LEED categories positively affected by the indoor resilient athletic surfacing:

LEED™ V4 Credit		Contribution
Materials & Resources: Building Product Disclosure & Optimization (BPDO)		
MRc3: Sourcing of Raw Materials	Options 1 & 2	2 Points
MRc4: Material Ingredients	Option 1	1 Point
MRc5: Construction and Demolition Management	Reclamation and Recycling	ReStart® Program
Indoor Environmental Quality		
EQc2: Low-Emitting Materials	TVOC: 0.5 mg/m3 or less	FloorScore®

PART 2 - PRODUCTS

2.1 *MANUFACTURERS*

A. The basis of the design for the indoor resilient multipurpose surfacing is Omnisports 9.4 mm and Lumaflex Elite system as manufactured by Tarkett.
B. All other installation accessories and related components must be either made or approved by the indoor resilient athletic surfacing manufacturer.
C. Other products may be approved as equal if deemed qualified and submitted in accordance with the General Conditions.
D. Test reports confirming compliance from an independent sports laboratory must be provided along with samples, technical data, installation, maintenance, and warranty prior to acceptance as an alternative product.

2.2 *MATERIALS*

A. Omnisports 9.4 mm - Prefabricated sport surface 2.0 mm (0.08″) with wood flooring design and slightly textured embossed surface as supplied by Tarkett.
   1. Embossing of wood design and solid colors must be the same; varying embossing or surface textures will not be allowed.
   2. Printing of wood design shall closely resemble standard wood strip flooring in size, color, board length, and grain appearance.
   3. The wood design shall be protected by a clear layer of pure PVC (Polyvinyl Chloride) and TopClean xp, a factory-applied UV cured urethane treatment.
   4. Intermediate layers shall be fortified with a non-woven fiberglass grid for increased dimensional stability.
   5. The Lumaflex Elite System shall incorporate Lumaflex Elite double tongue and grooved multi-ply engineered panels, force reduction cushion, and appropriate vapor retarder.

B. Physical properties of the indoor resilient athletic surfacing shall conform to the following minimums:

Width	—	6′ 6″ (2 m)
Length	—	85′ (25.9m) approx.
Wear Layer	—	2 mm
Total Thickness	—	9.4 mm
Total Combined Thickness		1 5/8″ (40 mm approx.)
Wear Layer	Type 1– Grade 1	ASTM F1303/F410
Rolling Load	PASSED	0.30 (EN 1569 {11/1999})
Force Reduction	PASSED	ASTM F2772 Class 5
Surface Finish Effect	PASSED	ASTM F2772 (80 – 110)
Vertical Deformation	PASSED	ASTM F2772
Ball Rebound	PASSED	ASTM F2772 > 90%
Chemical Resistance	Excellent	ASTM F925
Impact Resistance	PASSED	EN 1717
Abrasion Resistance	PASSED	0.10 (EN ISO 5470-1 {06/1999})
Static Load Limit	PASSED	ASTM F970- Load 175 Lbs
Phthalate-free technology	—	YES
REACH Compliant	—	YES
Heavy Metals	—	NO
ISO 9001	—	YES
ISO 14001	—	YES

1. Color: As available from the indoor resilient athletic surfacing manufacturer's standard range.
2. Hardwood Design Series: A wood look design as available from the indoor resilient athletic surfacing manufacturer's standard range.
3. Texture: Texture to remain consistent between solid colors and wood design when blending colors.

C. Welding Rod: As supplied by the indoor resilient athletic surfacing manufacturer or supplier.
   1. Color to blend with the indoor resilient athletic surfacing color or design.
   2. All seams shall be welded to create a monolithic and impermeable surface.

D. Adhesive: As approved by the indoor resilient athletic surfacing manufacturer.

E. Game Line Paint and Primer: As approved by the indoor resilient athletic surfacing manufacturer.

PART 3 - EXECUTION

3.1 *EXAMINATION*

A. It is the responsibility of the general contractor/construction manager to ensure that project/site conditions are acceptable for the installation of the indoor resilient athletic flooring.
B. Verify that the area in which the indoor resilient athletic surfacing will be installed is dry and weather tight. Verify that permanent heat, light and ventilation are installed and operable.
C. Verify that all other work that could cause damage, dirt and dust or interrupt the normal pace of the indoor resilient athletic flooring installation is completed or suspended.
D. Verify that there is a stable room temperature of at least 65◦F.
E. Verify that there are no foreign materials or objects on the subfloor and that the subfloor is clean and ready for installation.
F. *Concrete Subfloor: moisture content less than 85% RH when tested per ASTM F2170.*
G. Follow Fieldturf USA, Inc. installation recommendations.
H. Do not average the results of the tests. Report all field test results in writing to the General Contractor, Architect, and End User prior to installation.
I. Verify that the concrete subfloor surface pH level is within the 7 - 11 range.
J. Document the results confirming the slab is within manufacturer's tolerances for slab deviation.

3.2 *PREPARATION OF SURFACES*

A. Sand the entire surface of the concrete slab.
B. Sweep the concrete slab so as to remove all dirt and dust. If a sweeping compound is to be used it must be a sweeping compound that does not contain oil or other items that may inhibit the adhesive bond.
C. Slab must be dust free. In the event that dust impairs adhesive bond, priming the slab prior to application of adhesive may be necessary. Follow installation guidelines.
D. Follow OSHA guidelines.

3.3 *INSTALLATION*

A. The installation area shall be closed to all traffic and activity for a period to be set by the indoor resilient athletic surfacing installer. The indoor resilient athletic surfacing installation shall not begin until the installer is familiar with the existing conditions.
B. All necessary precautions should be taken to minimize noise, smell, dust, the use of hazardous materials and any other items that may inconvenience others.
C. Install the indoor resilient athletic surfacing in strict accordance with the indoor resilient athletic surfacing manufacturer's written instructions.
D. Install the indoor resilient athletic surfacing minimizing cross seams. Provide a seam diagram during the submittal process for approval prior to installation. Vinyl Sheet Flooring Seams: Comply with ASTM F 1516. Rout joints and heat weld to permanently and seamlessly fuse sections together.
E. Paint game lines using approved game line paint primer and game line paint in strict accordance with the game line paint manufacturer's instructions.
F. Install appropriate threshold plates or transition strips where necessary.

2.0 *CLEANING*

A. Remove all unused materials, tools, and equipment and dispose of any debris properly. Clean the indoor resilient athletic surfacing in accordance with the manufacturer's instructions.

3.6 *PROTECTION*

A. If required, protect the indoor resilient athletic surfacing from damage using coverings approved by the manufacturer until acceptance of work by the customer or their authorized representative.

3.7 *RELATED STANDARDS AND GUIDELINES*

A. ASTM F2170 "Standard Test Method for Determining Relative Humidity In Concrete Floor Slabs Using In-Situ Probes"
B. ASTM F710 "Standard Practice for Preparing Concrete Floors to Receive Resilient Flooring"
C. ACI 302.2R-06 "Guideline for Concrete Slabs that Receive Moisture-Sensitive Flooring Materials"
D. ASTM F2772-11 "Standard Specification for Athletic Performance Properties of Indoor Sports Floor Systems"

END OF SECTION

SECTION 09 65 66
ARCHITECTURAL SPECIFICATIONS FOR INDOOR RESILIENT ATHLETIC SURFACING

PART 1 – GENERAL

1.1 *SECTION INCLUDES*

A. Supply and installation of the indoor resilient multipurpose surfacing
B. Application of the game lines
C. References for the correct construction and preparation of concrete slabs to receive resilient flooring.

1.2 *SUBMITTALS*

A. Product Data:
   1. Manufacturer's promotional brochures, specifications and installation instructions
B. Manufacturer Certifications:
   1. Provide certification that accurately identifies the Original Equipment Manufacturer (OEM) of flooring furnished for this project including manufacturer's name, address and factory location.
   2. Suppliers of private label flooring for this project must identify themselves as such and fully disclose the OEM information listed above.
   3. All "manufacturer" requirements in these specifications must be complied with by the OEM, including warranties, certifications, qualifications, product data, test results, environmental requirements, performance data, etc.
C. Samples:
   1. Submit for selection and approval three (3) sets of the indoor resilient multipurpose surfacing, manufacturer's brochures, samples or sample boards of all of the available colors, textures and styles.
   2. Submit color samples of all the available game line paint colors for selection and approval.
D. Closeout Submittals:
   1. Submit three (3) copies of the indoor resilient multipurpose surfacing and manufacturer's maintenance instructions.
   2. Submit three (3) copies of the material and installation warranties as specified.

1.3 *QUALITY ASSURANCE*

A. Qualifications:
   1. The indoor resilient multipurpose surfacing shall have been actively marketed for a minimum of ten (10) years.
   2. The indoor resilient multipurpose surfacing shall be manufactured in an ISO 9001 certified plant.
   3. The indoor resilient multipurpose surfacing shall be manufactured in an ISO 14001 certified plant.
   4. The indoor resilient multipurpose surfacing supplier shall be an established firm, experienced in the field, and competent in the techniques required by the manufacturer.
   5. The installer of the indoor resilient multipurpose surfacing shall have a minimum of five (5) years of experience in the field installing indoor resilient multipurpose surfacing and have worked on at least five (5) projects of similar size, type and complexity.

B. Certifications:
   1. Installer to submit the indoor resilient athletic surfacing manufacturer's certification attesting that they are a trained installer of the indoor resilient multipurpose surfacing.
   2. The indoor resilient multipurpose surfacing manufacturer to submit official ISO 9001 certification for the facility in which the indoor resilient multipurpose surfacing is manufactured.

C. Testing:
   1. Tests shall be relative for multi-purpose use with certificates from independent testing resources to be made available upon request.
   2. Test results shall be no more than 5 years old and performed according to ASTM standard testing procedures.

1.4 *DELIVERY, STORAGE AND HANDLING*

A. Delivery:
   Material shall not be delivered until all related work is in place and finished and/or proper storage facilities and conditions can be provided and guaranteed stable according to FieldTurf USA, Inc. recommendations.

B. Storage:
   1. Store the material in a secure, clean and dry location.
   2. Maintain temperature between 55° and 85° Fahrenheit.
   3. Store the indoor resilient athletic surfacing rolls in an upright position on a smooth flat surface immediately upon delivery to jobsite.
   4. Rolls shipped in rigid protective cardboard containers can be laid horizontally prior to unpacking and installation.

1.5 *PROJECT/SITE CONDITIONS*

A. It is the responsibility of the general contractor/construction manager to maintain project/site conditions acceptable for the installation of the indoor resilient multipurpose flooring.

B. The area in which the indoor resilient multipurpose surfacing will be installed shall be dry and weather tight. Permanent heat, light and ventilation shall be installed and operable.

C. All other trades shall have completed their work prior to the installation of the resilient athletic flooring. The general contractor or construction manager shall maintain a secure and clean working environment before, during and after the installation.

D. Maintain a stable room temperature of at least 65°F for a minimum of one (1) week prior to, during and thereafter installation.

E. An effective low-permeance vapor barrier is placed directly beneath the concrete subfloor. For "on" or "below grade" installations, it is recommended to provide a permanent vapor barrier resistant to long term hydrostatic pressure/moisture exposure. Protrusions should be sealed to prevent moisture migration into the slab. Moisture should not be allowed to enter the slab after the completed construction.

F. Concrete subfloor surface pH level within the 7 to 11 range dependent upon installation type.

G. Concrete subfloor should be no greater than 1/8" within a 10 ft diameter. This tolerance can be measured in accordance with ASTM E1155. A specified (F_F) of 50 and an (F_L) of 30 should reach this degree of floor flatness and floor level. There is no numerical correlation between F numbers and the deviation from the straight

edge. However, the above specified numbers should achieve a flat floor with minimal deviation in the slab. Reference ACI 117 and ACI 302.1R. The general contractor should provide a certificate of compliance with the above recommendations.

H. Concrete subfloor must be clean and free of all foreign materials or objects including, but not limited to, curing compounds and sealers.

I. Fill cracks, grooves, voids, depressions, and other minor imperfections. Follow the manufacturer's directions. Moveable joints must be treated utilizing specific transitioning joint devices depending upon the architect's recommendations. Follow current ASTM F710 guidelines for the preparation of concrete slabs to receive resilient flooring.

J. Refer to ACI 302.2R "Guidelines for Concrete Slabs that Receive Moisture-Sensitive Flooring Materials" for concrete design and construction.

K. Concrete slab shall be fortified with continual steel reinforcement. Fiber reinforcement alone shall not be considered adequate fortification.

1.6 *WARRANTY*

A. Special Limited Warranty:
   1. Manufacturer's standard form in which manufacturer agrees to repair or replace sports flooring including labor that fails within specified warranty period.

B. Material warranty must be direct from the product manufacturer.
   1. Material warranties from separate or third party insurance providers are not valid.
   2. Material warranties must come from original manufacturer or division thereof. Private label warranties from distributors or brokers are not valid. Supply original point of manufacturing upon request.

C. Failures include, but are not limited to, the following:
   1. Material manufacturing defects.
   2. Surface wear and deterioration to the point of wear-through of wear layer per ASTM F410/ASTM F1303.
   3. Failure due to substrate moisture exposure exceeding 80 percent relative humidity when tested according to ASTM F2170.

D. Warranty Period:
   1. <u>For material defects and surface wear-through:</u> **15** years from date of substantial completion.

E. Installer's Limited Warranty:
   1. Installer's standard form in which installer agrees to repair or replace sports flooring that fails due to poor workmanship or faulty installation within the specified warranty period.
   2. Warranty Period: 2 years from date of substantial completion.

1.7 *ADDITIONAL MATERIALS*

A. Furnish to the owner additional materials containing a total of at least 1% of each different color or design of the indoor resilient athletic surfacing used on the project.

1.8 *LEED™ CERTIFICATION*

A. The indoor resilient athletic surfacing should be able to help this facility to achieve points towards *LEED™ certification.* Flooring system must be certified by FloorScore.
B. LEED categories positively affected by the indoor resilient athletic surfacing:

LEED™ V4 Credit		Contribution
Materials & Resources: Building Product Disclosure & Optimization (BPDO)		
MRc3: Sourcing of Raw Materials	Options 1 & 2	2 Points
MRc4: Material Ingredients	Option 1	1 Point
MRc5: Construction and Demolition Management	Reclamation and Recycling	ReStart® Program
Indoor Environmental Quality		
EQc2: Low-Emitting Materials	TVOC: 0.5 mg/m3 or less	FloorScore®

PART 2 - PRODUCTS

2.1 *MANUFACTURERS*

A. The basis of the design for the indoor resilient multipurpose surfacing is Omnisports 9.4 mm and Lumaflex Fit system as manufactured by Tarkett.
B. All other installation accessories and related components must be either made or approved by the indoor resilient athletic surfacing manufacturer.
C. Other products may be approved as equal if deemed qualified and submitted in accordance with the General Conditions.
D. Test reports confirming compliance from an independent sports laboratory must be provided along with samples, technical data, installation, maintenance, and warranty prior to acceptance as an alternative product.

2.2 *MATERIALS*

A. Omnisports 9.4 mm - Prefabricated sport surface 2.0 mm (0.08″) with wood flooring design and slightly textured embossed surface as supplied by Tarkett.
   1. Embossing of wood design and solid colors must be the same; varying embossing or surface textures will not be allowed.
   2. Printing of wood design shall closely resemble standard wood strip flooring in size, color, board length, and grain appearance.
   3. The wood design shall be protected by a clear layer of pure PVC (Polyvinyl Chloride) and TopClean xp, a factory-applied UV cured urethane treatment.
   4. Intermediate layers shall be fortified with a non-woven fiberglass grid for increased dimensional stability.
   5. The Lumaflex Fit System shall incorporate Lumaflex Fit double tongue and grooved multi-ply engineered panels, force reduction cushion, and appropriate vapor retarder.

B. Physical properties of the indoor resilient athletic surfacing shall conform to the following minimums:

Width	—	6′ 6″ (2 m)
Length	—	85′ (25.9m) approx.
Wear Layer	—	2 mm
Total Thickness	—	9.4 mm
Total Combined Thickness		53mm (2 1/8″) approx
Wear Layer	Type 1– Grade 1	ASTM F1303/F410
Rolling Load	PASSED	0.30 (EN 1569 {11/1999})
Force Reduction	PASSED	ASTM F2772 Class 5
Surface Finish Effect	PASSED	ASTM F2772 (80 – 110)
Vertical Deformation	PASSED	ASTM F2772
Ball Rebound	PASSED	ASTM F2772 > 90%
Chemical Resistance	Excellent	ASTM F925
Impact Resistance	PASSED	EN 1717
Abrasion Resistance	PASSED	0.10 (EN ISO 5470-1 {06/1999})
Static Load Limit	PASSED	ASTM F970- Load 175 Lbs
Phthalate-free technology	—	YES
REACH Compliant	—	YES
Heavy Metals	—	NO
ISO 9001	—	YES
ISO 14001	—	YES

1. Color: As available from the indoor resilient athletic surfacing manufacturer's standard range.
2. Hardwood Design Series: A wood look design as available from the indoor resilient athletic surfacing manufacturer's standard range.
3. Texture: Texture to remain consistent between solid colors and wood design when blending colors.

C. Welding Rod: As supplied by the indoor resilient athletic surfacing manufacturer or supplier.
   1. Color to blend with the indoor resilient athletic surfacing color or design.
   2. All seams shall be welded to create a monolithic and impermeable surface.

D. Adhesive: As approved by the indoor resilient athletic surfacing manufacturer.

E. Game Line Paint and Primer: As approved by the indoor resilient athletic surfacing manufacturer.

PART 3 - EXECUTION

3.1 *EXAMINATION*

A. It is the responsibility of the general contractor/construction manager to ensure that project/site conditions are acceptable for the installation of the indoor resilient athletic flooring.
B. Verify that the area in which the indoor resilient athletic surfacing will be installed is dry and weather tight. Verify that permanent heat, light and ventilation are installed and operable.
C. Verify that all other work that could cause damage, dirt and dust or interrupt the normal pace of the indoor resilient athletic flooring installation is completed or suspended.
D. Verify that there is a stable room temperature of at least 65◦F.
E. Verify that there are no foreign materials or objects on the subfloor and that the subfloor is clean and ready for installation.
F. *Concrete Subfloor: moisture content less than 85% RH when tested per ASTM F2170.*
G. Follow Fieldturf USA, Inc. installation recommendations.
H. Do not average the results of the tests. Report all field test results in writing to the General Contractor, Architect, and End User prior to installation.
I. Verify that the concrete subfloor surface pH level is within the 7 - 11 range.
J. Document the results confirming the slab is within manufacturer's tolerances for slab deviation.

3.2 *PREPARATION OF SURFACES*

A. Sand the entire surface of the concrete slab.
B. Sweep the concrete slab so as to remove all dirt and dust. If a sweeping compound is to be used it must be a sweeping compound that does not contain oil or other items that may inhibit the adhesive bond.
C. Slab must be dust free. In the event that dust impairs adhesive bond, priming the slab prior to application of adhesive may be necessary. Follow installation guidelines.
D. Follow OSHA guidelines.

3.3 *INSTALLATION*

A. The installation area shall be closed to all traffic and activity for a period to be set by the indoor resilient athletic surfacing installer. The indoor resilient athletic surfacing installation shall not begin until the installer is familiar with the existing conditions.
B. All necessary precautions should be taken to minimize noise, smell, dust, the use of hazardous materials and any other items that may inconvenience others.
C. Install the indoor resilient athletic surfacing in strict accordance with the indoor resilient athletic surfacing manufacturer's written instructions.
D. Install the indoor resilient athletic surfacing minimizing cross seams. Provide a seam diagram during the submittal process for approval prior to installation. Vinyl Sheet Flooring Seams: Comply with ASTM F 1516. Rout joints and heat weld to permanently and seamlessly fuse sections together.
E. Paint game lines using approved game line paint primer and game line paint in strict accordance with the game line paint manufacturer's instructions.
F. Install appropriate threshold plates or transition strips where necessary.

2.0 *CLEANING*

A. Remove all unused materials, tools, and equipment and dispose of any debris properly. Clean the indoor resilient athletic surfacing in accordance with the manufacturer's instructions.

3.6 *PROTECTION*

A. If required, protect the indoor resilient athletic surfacing from damage using coverings approved by the manufacturer until acceptance of work by the customer or their authorized representative.

3.7 *RELATED STANDARDS AND GUIDELINES*

A. ASTM F2170 "Standard Test Method for Determining Relative Humidity In Concrete Floor Slabs Using In-Situ Probes"
B. ASTM F710 "Standard Practice for Preparing Concrete Floors to Receive Resilient Flooring"
C. ACI 302.2R-06 "Guideline for Concrete Slabs that Receive Moisture-Sensitive Flooring Materials"
D. ASTM F2772-11 "Standard Specification for Athletic Performance Properties of Indoor Sports Floor Systems"

END OF SECTION

SECTION 09 65 66
ARCHITECTURAL SPECIFICATIONS FOR INDOOR RESILIENT ATHLETIC SURFACING

PART 1 – GENERAL

1.1 *SECTION INCLUDES*

A. Supply and installation of the indoor resilient multipurpose surfacing
B. Application of the game lines
C. References for the correct construction and preparation of concrete slabs to receive resilient flooring.

1.2 *SUBMITTALS*

A. Product Data:
   1. Manufacturer's promotional brochures, specifications and installation instructions
B. Manufacturer Certifications:
   1. Provide certification that accurately identifies the Original Equipment Manufacturer (OEM) of flooring furnished for this project including manufacturer's name, address and factory location.
   2. Suppliers of private label flooring for this project must identify themselves as such and fully disclose the OEM information listed above.
   3. All "manufacturer" requirements in these specifications must be complied with by the OEM, including warranties, certifications, qualifications, product data, test results, environmental requirements, performance data, etc.
C. Samples:
   1. Submit for selection and approval three (3) sets of the indoor resilient multipurpose surfacing, manufacturer's brochures, samples or sample boards of all of the available colors, textures and styles.
   2. Submit color samples of all the available game line paint colors for selection and approval.
D. Closeout Submittals:
   1. Submit three (3) copies of the indoor resilient multipurpose surfacing and manufacturer's maintenance instructions.
   2. Submit three (3) copies of the material and installation warranties as specified.

1.3 *QUALITY ASSURANCE*

A. Qualifications:
   1. The indoor resilient multipurpose surfacing shall have been actively marketed for a minimum of ten (10) years.
   2. The indoor resilient multipurpose surfacing shall be manufactured in an ISO 9001 certified plant.
   3. The indoor resilient multipurpose surfacing shall be manufactured in an ISO 14001 certified plant.
   4. The indoor resilient multipurpose surfacing supplier shall be an established firm, experienced in the field, and competent in the techniques required by the manufacturer.
   5. The installer of the indoor resilient multipurpose surfacing shall have a minimum of five (5) years of experience in the field installing indoor resilient multipurpose surfacing and have worked on at least five (5) projects of similar size, type and complexity.

B. Certifications:
   1. Installer to submit the indoor resilient athletic surfacing manufacturer's certification attesting that they are a trained installer of the indoor resilient multipurpose surfacing.
   2. The indoor resilient multipurpose surfacing manufacturer to submit official ISO 9001 certification for the facility in which the indoor resilient multipurpose surfacing is manufactured.

C. Testing:
   1. Tests shall be relative for multi-purpose use with certificates from independent testing resources to be made available upon request.
   2. Test results shall be no more than 5 years old and performed according to ASTM standard testing procedures.

1.4 *DELIVERY, STORAGE AND HANDLING*

A. Delivery:
   Material shall not be delivered until all related work is in place and finished and/or proper storage facilities and conditions can be provided and guaranteed stable according to FieldTurf USA, Inc. recommendations.

B. Storage:
   1. Store the material in a secure, clean and dry location.
   2. Maintain temperature between 55° and 85° Fahrenheit.
   3. Store the indoor resilient athletic surfacing rolls in an upright position on a smooth flat surface immediately upon delivery to jobsite.
   4. Rolls shipped in rigid protective cardboard containers can be laid horizontally prior to unpacking and installation.

1.5 *PROJECT/SITE CONDITIONS*

A. It is the responsibility of the general contractor/construction manager to maintain project/site conditions acceptable for the installation of the indoor resilient multipurpose flooring.

B. The area in which the indoor resilient multipurpose surfacing will be installed shall be dry and weather tight. Permanent heat, light and ventilation shall be installed and operable.

C. All other trades shall have completed their work prior to the installation of the resilient athletic flooring. The general contractor or construction manager shall maintain a secure and clean working environment before, during and after the installation.

D. Maintain a stable room temperature of at least 65°F for a minimum of one (1) week prior to, during and thereafter installation.

E. An effective low-permeance vapor barrier is placed directly beneath the concrete subfloor. For "on" or "below grade" installations, it is recommended to provide a permanent vapor barrier resistant to long term hydrostatic pressure/moisture exposure. Protrusions should be sealed to prevent moisture migration into the slab. Moisture should not be allowed to enter the slab after the completed construction.

F. Concrete subfloor surface pH level within the 7 to 11 range dependent upon installation type.

G. Concrete subfloor should be no greater than 1/8" within a 10 ft diameter. This tolerance can be measured in accordance with ASTM E1155. A specified (F_F) of 50 and an (F_L) of 30 should reach this degree of floor flatness and floor level. There is no numerical correlation between F numbers and the deviation from the straight

edge. However, the above specified numbers should achieve a flat floor with minimal deviation in the slab. Reference ACI 117 and ACI 302.1R. The general contractor should provide a certificate of compliance with the above recommendations.

H. Concrete subfloor must be clean and free of all foreign materials or objects including, but not limited to, curing compounds and sealers.

I. Fill cracks, grooves, voids, depressions, and other minor imperfections. Follow the manufacturer's directions. Moveable joints must be treated utilizing specific transitioning joint devices depending upon the architect's recommendations. Follow current ASTM F710 guidelines for the preparation of concrete slabs to receive resilient flooring.

J. Refer to ACI 302.2R "Guidelines for Concrete Slabs that Receive Moisture-Sensitive Flooring Materials" for concrete design and construction.

K. Concrete slab shall be fortified with continual steel reinforcement. Fiber reinforcement alone shall not be considered adequate fortification.

1.6 *WARRANTY*

A. Special Limited Warranty:
   1. Manufacturer's standard form in which manufacturer agrees to repair or replace sports flooring including labor that fails within specified warranty period.

B. Material warranty must be direct from the product manufacturer.
   1. Material warranties from separate or third party insurance providers are not valid.
   2. Material warranties must come from original manufacturer or division thereof. Private label warranties from distributors or brokers are not valid. Supply original point of manufacturing upon request.

C. Failures include, but are not limited to, the following:
   1. Material manufacturing defects.
   2. Surface wear and deterioration to the point of wear-through of wear layer per ASTM F410/ASTM F1303.
   3. Failure due to substrate moisture exposure exceeding 80 percent relative humidity when tested according to ASTM F2170.

D. Warranty Period:
   1. <u>For material defects and surface wear-through:</u> **15** years from date of substantial completion.

E. Installer's Limited Warranty:
   1. Installer's standard form in which installer agrees to repair or replace sports flooring that fails due to poor workmanship or faulty installation within the specified warranty period.
   2. Warranty Period: 2 years from date of substantial completion.

1.7 *ADDITIONAL MATERIALS*

A. Furnish to the owner additional materials containing a total of at least 1% of each different color or design of the indoor resilient athletic surfacing used on the project.

1.8 *LEED™ CERTIFICATION*

A. The indoor resilient athletic surfacing should be able to help this facility to achieve points towards *LEED™ certification.* Flooring system must be certified by FloorScore.
B. LEED categories positively affected by the indoor resilient athletic surfacing:

LEED™ V4 Credit		Contribution
Materials & Resources: Building Product Disclosure & Optimization (BPDO)		
MRc3: Sourcing of Raw Materials	Options 1 & 2	2 Points
MRc4: Material Ingredients	Option 1	1 Point
MRc5: Construction and Demolition Management	Reclamation and Recycling	ReStart® Program
Indoor Environmental Quality		
EQc2: Low-Emitting Materials	TVOC: 0.5 mg/m3 or less	FloorScore®

PART 2 - PRODUCTS

2.1 *MANUFACTURERS*

A. The basis of the design for the indoor resilient multipurpose surfacing is Omnisports 9.4 mm and Lumaflex system as manufactured by Tarkett.
B. All other installation accessories and related components must be either made or approved by the indoor resilient athletic surfacing manufacturer.
C. Other products may be approved as equal if deemed qualified and submitted in accordance with the General Conditions.
D. Test reports confirming compliance from an independent sports laboratory must be provided along with samples, technical data, installation, maintenance, and warranty prior to acceptance as an alternative product.

2.2 *MATERIALS*

A. Omnisports 9.4 mm - Prefabricated sport surface 2.0 mm (0.08″) with wood flooring design and slightly textured embossed surface as supplied by Tarkett.
   1. Embossing of wood design and solid colors must be the same; varying embossing or surface textures will not be allowed.
   2. Printing of wood design shall closely resemble standard wood strip flooring in size, color, board length, and grain appearance.
   3. The wood design shall be protected by a clear layer of pure PVC (Polyvinyl Chloride) and TopClean xp, a factory-applied UV cured urethane treatment.
   4. Intermediate layers shall be fortified with a non-woven fiberglass grid for increased dimensional stability.
   5. The Lumaflex System shall incorporate Lumaflex double tongue and grooved multi-ply engineered panels, force reduction cushion, and appropriate vapor retarder.

B. Physical properties of the indoor resilient athletic surfacing shall conform to the following minimums:

Width	—	6′ 6″ (2 m)
Length	—	85′ (25.9m) approx.
Wear Layer	—	2 mm
Total Thickness	—	9.4 mm
Total Combined Thickness		1 5/8″ (40 mm approx.)
Wear Layer	Type 1– Grade 1	ASTM F1303/F410
Rolling Load	PASSED	0.30 (EN 1569 {11/1999})
Force Reduction	PASSED	ASTM F2772 Class 4
Surface Finish Effect	PASSED	ASTM F2772 (80 – 110)
Vertical Deformation	PASSED	ASTM F2772
Ball Rebound	PASSED	ASTM F2772 > 90%
Chemical Resistance	Excellent	ASTM F925
Impact Resistance	PASSED	EN 1717
Abrasion Resistance	PASSED	0.10 (EN ISO 5470-1 {06/1999})
Static Load Limit	PASSED	ASTM F970- Load 175 Lbs
Fire Rating	PASSED	ASTM E648 Class 1
Phthalate-free technology	—	YES
Lumaflex Foam		GreenGuard Certified
REACH Compliant	—	YES
Heavy Metals	—	NO
ISO 9001	—	YES
ISO 14001	—	YES

1. Color: As available from the indoor resilient athletic surfacing manufacturer's standard range.
2. Hardwood Design Series: A wood look design as available from the indoor resilient athletic surfacing manufacturer's standard range.
3. Texture: Texture to remain consistent between solid colors and wood design when blending colors.

C. Welding Rod: As supplied by the indoor resilient athletic surfacing manufacturer or supplier.
   1. Color to blend with the indoor resilient athletic surfacing color or design.
   2. All seams shall be welded to create a monolithic and impermeable surface.

D. Adhesive: As approved by the indoor resilient athletic surfacing manufacturer.

E. Game Line Paint and Primer: As approved by the indoor resilient athletic surfacing manufacturer.

PART 3 - EXECUTION

3.1 *EXAMINATION*

A. It is the responsibility of the general contractor/construction manager to ensure that project/site conditions are acceptable for the installation of the indoor resilient athletic flooring.
B. Verify that the area in which the indoor resilient athletic surfacing will be installed is dry and weather tight. Verify that permanent heat, light and ventilation are installed and operable.
C. Verify that all other work that could cause damage, dirt and dust or interrupt the normal pace of the indoor resilient athletic flooring installation is completed or suspended.
D. Verify that there is a stable room temperature of at least 65◦F.
E. Verify that there are no foreign materials or objects on the subfloor and that the subfloor is clean and ready for installation.
F. *Concrete Subfloor: moisture content less than 85% RH when tested per ASTM F2170.*
G. Follow Fieldturf USA, Inc. installation recommendations.
H. Do not average the results of the tests. Report all field test results in writing to the General Contractor, Architect, and End User prior to installation.
I. Verify that the concrete subfloor surface pH level is within the 7 - 11 range.
J. Document the results confirming the slab is within manufacturer's tolerances for slab deviation.

3.2 *PREPARATION OF SURFACES*

A. Sand the entire surface of the concrete slab.
B. Sweep the concrete slab so as to remove all dirt and dust. If a sweeping compound is to be used it must be a sweeping compound that does not contain oil or other items that may inhibit the adhesive bond.
C. Slab must be dust free. In the event that dust impairs adhesive bond, priming the slab prior to application of adhesive may be necessary. Follow installation guidelines.
D. Follow OSHA guidelines.

3.3 *INSTALLATION*

A. The installation area shall be closed to all traffic and activity for a period to be set by the indoor resilient athletic surfacing installer. The indoor resilient athletic surfacing installation shall not begin until the installer is familiar with the existing conditions.
B. All necessary precautions should be taken to minimize noise, smell, dust, the use of hazardous materials and any other items that may inconvenience others.
C. Install the indoor resilient athletic surfacing in strict accordance with the indoor resilient athletic surfacing manufacturer's written instructions.
D. Install the indoor resilient athletic surfacing minimizing cross seams. Provide a seam diagram during the submittal process for approval prior to installation. Vinyl Sheet Flooring Seams: Comply with ASTM F 1516. Rout joints and heat weld to permanently and seamlessly fuse sections together.
E. Paint game lines using approved game line paint primer and game line paint in strict accordance with the game line paint manufacturer's instructions.
F. Install appropriate threshold plates or transition strips where necessary.

2.0 *CLEANING*

A. Remove all unused materials, tools, and equipment and dispose of any debris properly. Clean the indoor resilient athletic surfacing in accordance with the manufacturer's instructions.

3.6 *PROTECTION*

A. If required, protect the indoor resilient athletic surfacing from damage using coverings approved by the manufacturer until acceptance of work by the customer or their authorized representative.

3.7 *RELATED STANDARDS AND GUIDELINES*

A. ASTM F2170 "Standard Test Method for Determining Relative Humidity In Concrete Floor Slabs Using In-Situ Probes"
B. ASTM F710 "Standard Practice for Preparing Concrete Floors to Receive Resilient Flooring"
C. ACI 302.2R-06 "Guideline for Concrete Slabs that Receive Moisture-Sensitive Flooring Materials"
D. ASTM F2772-11 "Standard Specification for Athletic Performance Properties of Indoor Sports Floor Systems"

END OF SECTION

SECTION 09 65 66
ARCHITECTURAL SPECIFICATIONS FOR INDOOR RESILIENT ATHLETIC SURFACING

PART 1 – GENERAL

1.1 *SECTION INCLUDES*

A. Supply and installation of the indoor resilient multipurpose surfacing
B. Application of the game lines
C. References for the correct construction and preparation of concrete slabs to receive resilient flooring.

1.2 *SUBMITTALS*

A. Product Data:
   1. Manufacturer's promotional brochures, specifications and installation instructions
B. Manufacturer Certifications:
   1. Provide certification that accurately identifies the Original Equipment Manufacturer (OEM) of flooring furnished for this project including manufacturer's name, address and factory location.
   2. Suppliers of private label flooring for this project must identify themselves as such and fully disclose the OEM information listed above.
   3. All "manufacturer" requirements in these specifications must be complied with by the OEM, including warranties, certifications, qualifications, product data, test results, environmental requirements, performance data, etc.
C. Samples:
   1. Submit for selection and approval three (3) sets of the indoor resilient multipurpose surfacing, manufacturer's brochures, samples or sample boards of all of the available colors, textures and styles.
   2. Submit color samples of all the available game line paint colors for selection and approval.
D. Closeout Submittals:
   1. Submit three (3) copies of the indoor resilient multipurpose surfacing and manufacturer's maintenance instructions.
   2. Submit three (3) copies of the material and installation warranties as specified.

1.3 *QUALITY ASSURANCE*

A. Qualifications:
   1. The indoor resilient multipurpose surfacing shall have been actively marketed for a minimum of ten (10) years.
   2. The indoor resilient multipurpose surfacing shall be manufactured in an ISO 9001 certified plant.
   3. The indoor resilient multipurpose surfacing shall be manufactured in an ISO 14001 certified plant.
   4. The indoor resilient multipurpose surfacing supplier shall be an established firm, experienced in the field, and competent in the techniques required by the manufacturer.
   5. The installer of the indoor resilient multipurpose surfacing shall have a minimum of five (5) years of experience in the field installing indoor resilient multipurpose surfacing and have worked on at least five (5) projects of similar size, type and complexity.

B. Certifications:
   1. Installer to submit the indoor resilient athletic surfacing manufacturer's or distributor's certification attesting that they are an approved installer of the indoor resilient multipurpose surfacing.
   2. The ind**o**or resilient multipurpose surfacing manufacturer to submit official ISO 9001 certification for the facility in which the indoor resilient multipurpose surfacing is manufactured.

C. Testing:
   Tests shall be relative for multi-purpose use with certificates from independent testing resources to be made available upon request. Test results shall be performed according to ASTM standard testing procedures including ASTM F2772 "Standard Specification for Athletic Performance Properties of Indoor Sports Floor Systems".

1.4 *DELIVERY, STORAGE AND HANDLING*

A. Delivery:
   Material shall not be delivered until all related work is in place and finished and/or proper storage facilities and conditions can be provided and guaranteed stable according to FieldTurf USA, Inc. recommendations.

B. Storage:
   1. Store the material in a secure, clean and dry location.
   2. Maintain temperature between 55° and 85° Fahrenheit.
   3. Store the indoor resilient athletic surfacing rolls in an upright position on a smooth flat surface immediately upon delivery to jobsite.
   4. Rolls shipped in rigid protective cardboard containers can be laid horizontally prior to unpacking and installation.

1.5 *PROJECT/SITE CONDITIONS*

A. It is the responsibility of the general contractor/construction manager to maintain project/site conditions acceptable for the installation of the indoor resilient multipurpose flooring.

B. The area in which the indoor resilient multipurpose surfacing will be installed shall be dry and weather tight. Permanent heat, light and ventilation shall be installed and operable.

C. All other trades shall have completed their work prior to the installation of the resilient athletic flooring. The general contractor or construction manager shall maintain a secure and clean working environment before, during and after the installation.

D. Maintain a stable room temperature of at least 65°F for a minimum of one (1) week prior to, during and thereafter installation.

E. An effective low-permeance vapor barrier is placed directly beneath the concrete subfloor. For "on" or "below grade" installations, it is recommended to provide a permanent vapor barrier resistant to long term hydrostatic pressure/moisture exposure. Protrusions should be sealed to prevent moisture migration into the slab. Moisture should not be allowed to enter the slab after the completed construction.

F. Concrete subfloor surface pH level within the 7 to 10 range dependent upon installation type.

G. Concrete subfloor should be no greater than 1/8" within a 10 ft diameter. This tolerance can be measured in accordance with ASTM E1155. A specified (F_F) of 50 and an (F_L) of 30 should reach this degree of floor flatness and floor level. There is no numerical correlation between F numbers and the deviation from the straight

edge. However, the above specified numbers should achieve a flat floor with minimal deviation in the slab. Reference ACI 117 and ACI 302.1R. The general contractor should provide a certificate of compliance with the above recommendations.

H. Concrete subfloor must be clean and free of all foreign materials or objects including, but not limited to, curing compounds and sealers.

I. Fill cracks, grooves, voids, depressions, and other minor imperfections. Follow the manufacturer's directions. Moveable joints must be treated utilizing specific transitioning joint devices depending upon the architect's recommendations. Follow current ASTM F710 guidelines for the preparation of concrete slabs to receive resilient flooring.

J. Refer to ACI 302.2R "Guidelines for Concrete Slabs that Receive Moisture-Sensitive Flooring Materials" for concrete design and construction.

K. Concrete slab shall be fortified with continual steel reinforcement. Fiber reinforcement alone shall not be considered adequate fortification.

1.6 *WARRANTY*

A. Special Limited Warranty:
   1. Manufacturer's standard form in which manufacturer agrees to repair or replace sports flooring including labor that fails within specified warranty period.

B. Material warranty must be direct from the product manufacturer.
   1. Material warranties must come from original manufacturer or division thereof. Private label warranties from distributors or brokers are not valid. Supply original point of manufacturing upon request.

C. Failures include, but are not limited to, the following:
   1. Material manufacturing defects.
   2. Surface wear and deterioration to the point of wear-through of wear layer per ASTM F410/ASTM F1303.
   3. Failure due to substrate moisture exposure exceeding 98 percent relative humidity when tested according to ASTM F2170.

D. Warranty Period:
   1. <u>For material defects and surface wear-through:</u> **25** years from date of substantial completion.
   2. <u>For moisture vapor tolerance:</u> **25** years from date of substantial completion.

E. Installer's Limited Warranty:
   1. Installer's standard form in which installer agrees to repair or replace sports flooring that fails due to poor workmanship or faulty installation within the specified warranty period.
   2. Warranty Period: 2 years from date of substantial completion.

1.7 *ADDITIONAL MATERIALS*

A. Furnish to the owner additional materials containing a total of at least 1% of each different color or design of the indoor resilient athletic surfacing used on the project.

1.8 *LEED™ CERTIFICATION*

A. The indoor resilient athletic surfacing should be able to help this facility to achieve points towards *LEED™ certification.* Flooring system must be certified by FloorScore.
B. LEED categories positively affected by the indoor resilient athletic surfacing:

LEED™ V4 Credit		Contribution
Materials & Resources: Building Product Disclosure & Optimization (BPDO)		
MRc3: Sourcing of Raw Materials	Options 1 & 2	2 Points
MRc4: Material Ingredients	Option 1	1 Point
MRc5: Construction and Demolition Management	Reclamation and Recycling	ReStart® Program
Indoor Environmental Quality		
EQc2: Low-Emitting Materials	TVOC: 0.5 mg/m3 or less	FloorScore®

PART 2 - PRODUCTS

2.1 *MANUFACTURERS*

A. The basis of the design for the indoor resilient multipurpose surfacing is Omnisports Active+ as manufactured by Tarkett.
B. All other installation accessories and related components must be either made or approved by the indoor resilient athletic surfacing manufacturer.
C. Other products may be approved as equal if deemed qualified and submitted in accordance with the General Conditions.
D. Test reports confirming compliance from an independent sports laboratory must be provided along with samples, technical data, installation, maintenance, and warranty prior to acceptance as an alternative product.

2.2 *MATERIALS*

A. Omnisports Active+ - Prefabricated sport surface 8.1 mm (0.14”) with wood flooring design, single surface embossing and Extreme Three (3) Layers technology (X3LT) as supplied by Tarkett.
   1. Embossing of wood design and solid colors must be the same; varying embossing or surface textures will not be allowed.
   2. Printing of wood design shall closely resemble standard wood strip flooring in size, color, board length, and grain appearance.
   3. Surface embossing combined with TopClean XP must offer proper balance of surface friction per the ASTM F2772.
   4. Surface embossing combined with TopClean XP must provide resistance to stains and scratches. Surface profile must not incorporate linear embossing.
   5. The wood design shall be protected by a clear layer of pure PVC (Polyvinyl Chloride) and TopClean XP, a factory-applied UV cured urethane treatment.
   6. Extreme Three (3) Layers technology (X3LT) includes Omnisports XCS cushion, glass veil and calendared sheet must offer improved shock absorbing comfort while providing better indentation recovery

7. The XCS cushion force reduction layer shall be high-density closed cell PVC foam with honeycomb embossing, and is applied in one continuous manufacturing process.
8. Laminated or adhered foam layers will not be allowed.
9. Field constructed products will not be accepted.

A. Physical properties of the indoor resilient athletic surfacing shall conform to the following minimums:

Width	—	6’ 6” (2 m)
Length	—	85’ (25.9m) approx.
Wear Layer	—	2 mm
Total Thickness	—	8.1 mm
Wear Layer	Type 1– Grade 1	ASTM F1303/F410
Vertical Deformation	PASSED	ASTM F2772
Rolling Load	PASSED	0.30 (EN 1569 {11/1999})
Surface Finish Effect	PASSED	ASTM F2772 (80 – 110)
Chemical Resistance	Excellent	ASTM F925
Impact Resistance	PASSED	EN 1717
Abrasion Resistance	PASSED	0.10 (EN ISO 5470-1 {06/1999})
Static Load Limit	PASSED	ASTM F970- Load 175 Lbs
Sound Insulation	Excellent	+/= 19 dB (ISO 717/2)
In-Room Sound Insulation	Excellent	61dB (NF S31-074)
Ball Rebound	PASSED	ASTM F2772 > 90%
Force Reduction	PASSED	ASTM F2772 Class 3
Fire Rating	PASSED	ASTM E648 Class 1
Microbial Assays Test	No Growth	G21 ASTM - Backing
Asthma and Allergy Friendly™	ASP: 05-01/101	Certified Compliant
VOC	<10µg/m³	ASTM D5116 (small chamber)
Phthalate-free technology	—	YES
REACH Compliant	—	YES
Heavy Metals	—	NO
ISO 9001	—	YES
ISO 14001	—	YES

1. Color: As available from the indoor resilient athletic surfacing manufacturer’s standard range.
2. Hardwood Design Series: High definition printing for a realistic wood surface appearance as available from the indoor resilient athletic surfacing manufacturer’s standard range.
3. Texture: Texture to remain consistent between solid colors and wood design when blending colors.

C. Welding Rod: As supplied by the indoor resilient athletic surfacing manufacturer or supplier.
1. Color to blend with the indoor resilient athletic surfacing color or design.
2. All seams shall be welded to create a monolithic and impermeable surface.

D. Adhesive: As approved by the indoor resilient athletic surfacing manufacturer.
E. Game Line Paint and Primer: As approved by the indoor resilient athletic surfacing manufacturer.

PART 3 - EXECUTION

3.1 *EXAMINATION*

A. It is the responsibility of the general contractor/construction manager to ensure that project/site conditions are acceptable for the installation of the indoor resilient athletic flooring.
B. Verify that the area in which the indoor resilient athletic surfacing will be installed is dry and weather tight. Verify that permanent heat, light and ventilation are installed and operable.
C. Verify that all other work that could cause damage, dirt and dust or interrupt the normal pace of the indoor resilient athletic flooring installation is completed or suspended.
D. Verify that there is a stable room temperature of at least 65◦F.
E. Verify that there are no foreign materials or objects on the subfloor and that the subfloor is clean and ready for installation.
F. *For GreenLay™ Installation to Concrete Subfloor: moisture content less than 92% RH when tested per ASTM F2170.*
G. Follow Fieldturf USA, Inc. installation recommendations.
H. Do not average the results of the tests. Report all field test results in writing to the General Contractor, Architect, and End User prior to installation.
I. Verify that the concrete subfloor surface pH level is within the 7 - 10 range.
J. Document the results confirming the slab is within manufacturer's tolerances for slab deviation.

3.2 *PREPARATION OF SURFACES*

A. Sand the entire surface of the concrete slab.
B. Sweep the concrete slab so as to remove all dirt and dust. If a sweeping compound is to be used it must be a sweeping compound that does not contain oil or other items that may inhibit the adhesive bond.
C. Slab must be dust free. In the event that dust impairs adhesive bond, priming the slab prior to application of adhesive may be necessary. Follow installation guidelines.
D. Follow OSHA guidelines

3.3 *INSTALLATION*

A. The installation area shall be closed to all traffic and activity for a period to be set by the indoor resilient athletic surfacing installer. The indoor resilient athletic surfacing installation shall not begin until the installer is familiar with the existing conditions.
B. All necessary precautions should be taken to minimize noise, smell, dust, the use of hazardous materials and any other items that may inconvenience others.
C. Install the indoor resilient athletic surfacing in strict accordance with the indoor resilient athletic surfacing manufacturer's written instructions.
D. Install the indoor resilient athletic surfacing minimizing cross seams. Provide a seam diagram during the submittal process for approval prior to installation. Vinyl Sheet Flooring Seams: Comply with ASTM F 1516. Rout joints and heat weld to permanently and seamlessly fuse sections together.
E. Paint game lines using approved game line paint primer and game line paint in strict accordance with the game line paint manufacturer's instructions.
F. Install appropriate threshold plates or transition strips where necessary.

3.5 *CLEANING*

A. Remove all unused materials, tools, and equipment and dispose of any debris properly. Clean the indoor resilient athletic surfacing in accordance with the manufacturer's instructions.

3.6 *PROTECTION*

A. If required, protect the indoor resilient athletic surfacing from damage using coverings approved by the manufacturer until acceptance of work by the customer or their authorized representative.

3.7 *RELATED STANDARDS AND GUIDELINES*

A. ASTM F2170 "Standard Test Method for Determining Relative Humidity In Concrete Floor Slabs Using In-Situ Probes"
B. ASTM F710 "Standard Practice for Preparing Concrete Floors to Receive Resilient Flooring"
C. ACI 302.2R-06 "Guideline for Concrete Slabs that Receive Moisture-Sensitive Flooring Materials"
D. ASTM F2772-11 "Standard Specification for Athletic Performance Properties of Indoor Sports Floor Systems"

END OF SECTION

SECTION 09 65 66
ARCHITECTURAL SPECIFICATIONS FOR INDOOR RESILIENT ATHLETIC SURFACING

PART 1 – GENERAL

1.1 *SECTION INCLUDES*

A. Supply and installation of the indoor resilient multipurpose surfacing
B. Application of the game lines
C. References for the correct construction and preparation of concrete slabs to receive resilient flooring.

1.2 *SUBMITTALS*

A. Product Data:
   1. Manufacturer's promotional brochures, specifications and installation instructions
B. Manufacturer Certifications:
   1. Provide certification that accurately identifies the Original Equipment Manufacturer (OEM) of flooring furnished for this project including manufacturer's name, address and factory location.
   2. Suppliers of private label flooring for this project must identify themselves as such and fully disclose the OEM information listed above.
   3. All "manufacturer" requirements in these specifications must be complied with by the OEM, including warranties, certifications, qualifications, product data, test results, environmental requirements, performance data, etc.
C. Samples:
   1. Submit for selection and approval three (3) sets of the indoor resilient multipurpose surfacing, manufacturer's brochures, samples or sample boards of all of the available colors, textures and styles.
   2. Submit color samples of all the available game line paint colors for selection and approval.
D. Closeout Submittals:
   1. Submit three (3) copies of the indoor resilient multipurpose surfacing and manufacturer's maintenance instructions.
   2. Submit three (3) copies of the material and installation warranties as specified.

1.3 *QUALITY ASSURANCE*

A. Qualifications:
   1. The indoor resilient multipurpose surfacing shall have been actively marketed for a minimum of ten (10) years.
   2. The indoor resilient multipurpose surfacing shall be manufactured in an ISO 9001 certified plant.
   3. The indoor resilient multipurpose surfacing shall be manufactured in an ISO 14001 certified plant.
   4. The indoor resilient multipurpose surfacing supplier shall be an established firm, experienced in the field, and competent in the techniques required by the manufacturer.
   5. The installer of the indoor resilient multipurpose surfacing shall have a minimum of five (5) years of experience in the field installing indoor resilient multipurpose surfacing and have worked on at least five (5) projects of similar size, type and complexity.

B. Certifications:
   1. Installer to submit the indoor resilient athletic surfacing manufacturer's or distributor's certification attesting that they are an approved installer of the indoor resilient multipurpose surfacing.
   2. The ind**o**or resilient multipurpose surfacing manufacturer to submit official ISO 9001 certification for the facility in which the indoor resilient multipurpose surfacing is manufactured.

C. Testing:
   Tests shall be relative for multi-purpose use with certificates from independent testing resources to be made available upon request. Test results shall be performed according to ASTM standard testing procedures including ASTM F2772 "Standard Specification for Athletic Performance Properties of Indoor Sports Floor Systems".

1.4 *DELIVERY, STORAGE AND HANDLING*

A. Delivery:
   Material shall not be delivered until all related work is in place and finished and/or proper storage facilities and conditions can be provided and guaranteed stable according to FieldTurf USA, Inc. recommendations.

B. Storage:
   1. Store the material in a secure, clean and dry location.
   2. Maintain temperature between 55° and 85° Fahrenheit.
   3. Store the indoor resilient athletic surfacing rolls in an upright position on a smooth flat surface immediately upon delivery to jobsite.
   4. Rolls shipped in rigid protective cardboard containers can be laid horizontally prior to unpacking and installation.

1.5 *PROJECT/SITE CONDITIONS*

A. It is the responsibility of the general contractor/construction manager to maintain project/site conditions acceptable for the installation of the indoor resilient multipurpose flooring.

B. The area in which the indoor resilient multipurpose surfacing will be installed shall be dry and weather tight. Permanent heat, light and ventilation shall be installed and operable.

C. All other trades shall have completed their work prior to the installation of the resilient athletic flooring. The general contractor or construction manager shall maintain a secure and clean working environment before, during and after the installation.

D. Maintain a stable room temperature of at least 65°F for a minimum of one (1) week prior to, during and thereafter installation.

E. An effective low-permeance vapor barrier is placed directly beneath the concrete subfloor. For "on" or "below grade" installations, it is recommended to provide a permanent vapor barrier resistant to long term hydrostatic pressure/moisture exposure. Protrusions should be sealed to prevent moisture migration into the slab. Moisture should not be allowed to enter the slab after the completed construction.

F. Concrete subfloor surface pH level within the 7 to 10 range dependent upon installation type.

G. Concrete subfloor should be no greater than 1/8" within a 10 ft diameter. This tolerance can be measured in accordance with ASTM E1155. A specified (F_F) of 50 and an (F_L) of 30 should reach this degree of floor flatness and floor level. There is no numerical correlation between F numbers and the deviation from the straight

edge. However, the above specified numbers should achieve a flat floor with minimal deviation in the slab. Reference ACI 117 and ACI 302.1R. The general contractor should provide a certificate of compliance with the above recommendations.

H. Concrete subfloor must be clean and free of all foreign materials or objects including, but not limited to, curing compounds and sealers.

I. Fill cracks, grooves, voids, depressions, and other minor imperfections. Follow the manufacturer's directions. Moveable joints must be treated utilizing specific transitioning joint devices depending upon the architect's recommendations. Follow current ASTM F710 guidelines for the preparation of concrete slabs to receive resilient flooring.

J. Refer to ACI 302.2R "Guidelines for Concrete Slabs that Receive Moisture-Sensitive Flooring Materials" for concrete design and construction.

K. Concrete slab shall be fortified with continual steel reinforcement. Fiber reinforcement alone shall not be considered adequate fortification.

1.6 *WARRANTY*

A. Special Limited Warranty:
   1. Manufacturer's standard form in which manufacturer agrees to repair or replace sports flooring including labor that fails within specified warranty period.

B. Material warranty must be direct from the product manufacturer.
   1. Material warranties must come from original manufacturer or division thereof. Private label warranties from distributors or brokers are not valid. Supply original point of manufacturing upon request.

C. Failures include, but are not limited to, the following:
   1. Material manufacturing defects.
   2. Surface wear and deterioration to the point of wear-through of wear layer per ASTM F410/ASTM F1303.
   3. Failure due to substrate moisture exposure exceeding 98 percent relative humidity when tested according to ASTM F2170.

D. Warranty Period:
   1. <u>For material defects and surface wear-through:</u> **25** years from date of substantial completion.
   2. <u>For moisture vapor tolerance:</u> **25** years from date of substantial completion.

E. Installer's Limited Warranty:
   1. Installer's standard form in which installer agrees to repair or replace sports flooring that fails due to poor workmanship or faulty installation within the specified warranty period.
   2. Warranty Period: 2 years from date of substantial completion.

1.7 *ADDITIONAL MATERIALS*

A. Furnish to the owner additional materials containing a total of at least 1% of each different color or design of the indoor resilient athletic surfacing used on the project.

1.8 *LEED™ CERTIFICATION*

A. The indoor resilient athletic surfacing should be able to help this facility to achieve points towards *LEED™ certification.* Flooring system must be certified by FloorScore.
B. LEED categories positively affected by the indoor resilient athletic surfacing:

LEED™ V4 Credit		Contribution
Materials & Resources: Building Product Disclosure & Optimization (BPDO)		
MRc3: Sourcing of Raw Materials	Options 1 & 2	2 Points
MRc4: Material Ingredients	Option 1	1 Point
MRc5: Construction and Demolition Management	Reclamation and Recycling	ReStart® Program
Indoor Environmental Quality		
EQc2: Low-Emitting Materials	TVOC: 0.5 mg/m3 or less	FloorScore®

PART 2 - PRODUCTS

2.1 *MANUFACTURERS*

A. The basis of the design for the indoor resilient multipurpose surfacing is Omnisports Active+ as manufactured by Tarkett.
B. All other installation accessories and related components must be either made or approved by the indoor resilient athletic surfacing manufacturer.
C. Other products may be approved as equal if deemed qualified and submitted in accordance with the General Conditions.
D. Test reports confirming compliance from an independent sports laboratory must be provided along with samples, technical data, installation, maintenance, and warranty prior to acceptance as an alternative product.

2.2 *MATERIALS*

A. Omnisports Active+ - Prefabricated sport surface 8.1 mm (0.14”) with wood flooring design, single surface embossing and Extreme Three (3) Layers technology (X3LT) as supplied by Tarkett.
   1. Embossing of wood design and solid colors must be the same; varying embossing or surface textures will not be allowed.
   2. Printing of wood design shall closely resemble standard wood strip flooring in size, color, board length, and grain appearance.
   3. Surface embossing combined with TopClean XP must offer proper balance of surface friction per the ASTM F2772.
   4. Surface embossing combined with TopClean XP must provide resistance to stains and scratches. Surface profile must not incorporate linear embossing.
   5. The wood design shall be protected by a clear layer of pure PVC (Polyvinyl Chloride) and TopClean XP, a factory-applied UV cured urethane treatment.
   6. Extreme Three (3) Layers technology (X3LT) includes Omnisports XCS cushion, glass veil and calendared sheet must offer improved shock absorbing comfort while providing better indentation recovery

7. The XCS cushion force reduction layer shall be high-density closed cell PVC foam with honeycomb embossing, and is applied in one continuous manufacturing process.
8. Laminated or adhered foam layers will not be allowed.
9. Field constructed products will not be accepted.

A. Physical properties of the indoor resilient athletic surfacing shall conform to the following minimums:

Width	—	6’ 6” (2 m)
Length	—	85’ (25.9m) approx.
Wear Layer	—	2 mm
Total Thickness	—	8.1 mm
Wear Layer	Type 1– Grade 1	ASTM F1303/F410
Vertical Deformation	PASSED	ASTM F2772
Rolling Load	PASSED	0.30 (EN 1569 {11/1999})
Surface Finish Effect	PASSED	ASTM F2772 (80 – 110)
Chemical Resistance	Excellent	ASTM F925
Impact Resistance	PASSED	EN 1717
Abrasion Resistance	PASSED	0.10 (EN ISO 5470-1 {06/1999})
Static Load Limit	PASSED	ASTM F970- Load 175 Lbs
Sound Insulation	Excellent	+/= 19 dB (ISO 717/2)
In-Room Sound Insulation	Excellent	61dB (NF S31-074)
Ball Rebound	PASSED	ASTM F2772 > 90%
Force Reduction	PASSED	ASTM F2772 Class 3
Fire Rating	PASSED	ASTM E648 Class 1
Microbial Assays Test	No Growth	G21 ASTM - Backing
Asthma and Allergy Friendly™	ASP: 05-01/101	Certified Compliant
Phthalate-free technology	—	YES
REACH Compliant	—	YES
Heavy Metals	—	NO
ISO 9001	—	YES
ISO 14001	—	YES

1. Color: As available from the indoor resilient athletic surfacing manufacturer’s standard range.
2. Hardwood Design Series: High definition printing for a realistic wood surface appearance as available from the indoor resilient athletic surfacing manufacturer’s standard range.
3. Texture: Texture to remain consistent between solid colors and wood design when blending colors.

C. Welding Rod: As supplied by the indoor resilient athletic surfacing manufacturer or supplier.
   1. Color to blend with the indoor resilient athletic surfacing color or design.
   2. All seams shall be welded to create a monolithic and impermeable surface.

D. Adhesive: As approved by the indoor resilient athletic surfacing manufacturer.

E. Game Line Paint and Primer: As approved by the indoor resilient athletic surfacing manufacturer.

PART 3 - EXECUTION

3.1 *EXAMINATION*

A. It is the responsibility of the general contractor/construction manager to ensure that project/site conditions are acceptable for the installation of the indoor resilient athletic flooring.
B. Verify that the area in which the indoor resilient athletic surfacing will be installed is dry and weather tight. Verify that permanent heat, light and ventilation are installed and operable.
C. Verify that all other work that could cause damage, dirt and dust or interrupt the normal pace of the indoor resilient athletic flooring installation is completed or suspended.
D. Verify that there is a stable room temperature of at least 65◦F.
E. Verify that there are no foreign materials or objects on the subfloor and that the subfloor is clean and ready for installation.
F. *Direct Full Spread Adhering to Concrete Subfloor HS Sports Spray : moisture content less than 90% RH when tested per ASTM F2170.*
G. Follow Fieldturf USA, Inc installation recommendations.
H. Do not average the results of the tests. Report all field test results in writing to the General Contractor, Architect, and End User prior to installation.
I. Verify that the concrete subfloor surface pH level is within the 7 - 10 range.
J. Document the results indicating the slab is within manufacturer's tolerances for slab deviation.

3.2 *PREPARATION OF SURFACES*

A. Sand the entire surface of the concrete slab.
B. Sweep the concrete slab so as to remove all dirt and dust. If a sweeping compound is to be used it must be a sweeping compound that does not contain oil or other items that may inhibit the adhesive bond.
C. Slab must be dust free. In the event that dust impairs adhesive bond, priming the slab prior to application of adhesive may be necessary. Follow installation guidelines.

3.3 *INSTALLATION*

A. The installation area shall be closed to all traffic and activity for a period to be set by the indoor resilient athletic surfacing installer. The indoor resilient athletic surfacing installation shall not begin until the installer is familiar with the existing conditions.
B. All necessary precautions should be taken to minimize noise, smell, dust, the use of hazardous materials and any other items that may inconvenience others.
C. Install the indoor resilient athletic surfacing in strict accordance with the indoor resilient athletic surfacing manufacturer's written instructions.
D. Install the indoor resilient athletic surfacing minimizing cross seams. Provide a seam diagram during the submittal process for approval prior to installation. Vinyl Sheet Flooring Seams: Comply with ASTM F 1516. Rout joints and heat weld to permanently and seamlessly fuse sections together. Apply transitions at doorways as needed.
E. Paint game lines using approved game line paint primer and game line paint in strict accordance with the game line paint manufacturer's instructions.
F. Install appropriate threshold plates or transition strips where necessary.

3.5 *CLEANING*

A. Remove all unused materials, tools, and equipment and dispose of any debris properly. Clean the indoor resilient athletic surfacing in accordance with the manufacturer's instructions.

3.6 *PROTECTION*

A. If required, protect the indoor resilient athletic surfacing from damage using coverings approved by the manufacturer until acceptance of work by the customer or their authorized representative.

3.7 *RELATED STANDARDS AND GUIDELINES*

A. ASTM F2170 "Standard Test Method for Determining Relative Humidity In Concrete Floor Slabs Using In-Situ Probes"
B. ASTM F710 "Standard Practice for Preparing Concrete Floors to Receive Resilient Flooring"
C. ACI 302.2R-06 "Guideline for Concrete Slabs that Receive Moisture-Sensitive Flooring Materials"
D. ASTM F2772-11 "Standard Specification for Athletic Performance Properties of Indoor Sports Floor Systems"

END OF SECTION

SECTION 09 65 66
ARCHITECTURAL SPECIFICATIONS FOR INDOOR RESILIENT ATHLETIC SURFACING

PART 1 – GENERAL

1.1 *SECTION INCLUDES*

A. Supply and installation of the indoor resilient multipurpose surfacing
B. Application of the game lines
C. References for the correct construction and preparation of concrete slabs to receive resilient flooring.

1.2 *SUBMITTALS*

A. Product Data:
   1. Manufacturer's promotional brochures, specifications and installation instructions
B. Manufacturer Certifications:
   1. Provide certification that accurately identifies the Original Equipment Manufacturer (OEM) of flooring furnished for this project including manufacturer's name, address and factory location.
   2. Suppliers of private label flooring for this project must identify themselves as such and fully disclose the OEM information listed above.
   3. All "manufacturer" requirements in these specifications must be complied with by the OEM, including warranties, certifications, qualifications, product data, test results, environmental requirements, performance data, etc.
C. Samples:
   1. Submit for selection and approval three (3) sets of the indoor resilient multipurpose surfacing, manufacturer's brochures, samples or sample boards of all of the available colors, textures and styles.
   2. Submit color samples of all the available game line paint colors for selection and approval.
D. Closeout Submittals:
   1. Submit three (3) copies of the indoor resilient multipurpose surfacing and manufacturer's maintenance instructions.
   2. Submit three (3) copies of the material and installation warranties as specified.

1.3 *QUALITY ASSURANCE*

A. Qualifications:
   1. The indoor resilient multipurpose surfacing shall have been actively marketed for a minimum of ten (10) years.
   2. The indoor resilient multipurpose surfacing shall be manufactured in an ISO 9001 certified plant.
   3. The indoor resilient multipurpose surfacing shall be manufactured in an ISO 14001 certified plant.
   4. The indoor resilient multipurpose surfacing supplier shall be an established firm, experienced in the field, and competent in the techniques required by the manufacturer.
   5. The installer of the indoor resilient multipurpose surfacing shall have a minimum of five (5) years of experience in the field installing indoor resilient multipurpose surfacing and have worked on at least five (5) projects of similar size, type and complexity.

B. Certifications:
   1. Installer to submit the indoor resilient athletic surfacing manufacturer's or distributor's certification attesting that they are an approved installer of the indoor resilient multipurpose surfacing.
   2. The ind**o**or resilient multipurpose surfacing manufacturer to submit official ISO 9001 certification for the facility in which the indoor resilient multipurpose surfacing is manufactured.

C. Testing:
   Tests shall be relative for multi-purpose use with certificates from independent testing resources to be made available upon request. Test results shall be performed according to ASTM standard testing procedures including ASTM F2772 "Standard Specification for Athletic Performance Properties of Indoor Sports Floor Systems".

1.4 *DELIVERY, STORAGE AND HANDLING*

A. Delivery:
   Material shall not be delivered until all related work is in place and finished and/or proper storage facilities and conditions can be provided and guaranteed stable according to FieldTurf USA, Inc. recommendations.

B. Storage:
   1. Store the material in a secure, clean and dry location.
   2. Maintain temperature between 55° and 85° Fahrenheit.
   3. Store the indoor resilient athletic surfacing rolls in an upright position on a smooth flat surface immediately upon delivery to jobsite.
   4. Rolls shipped in rigid protective cardboard containers can be laid horizontally prior to unpacking and installation.

1.5 *PROJECT/SITE CONDITIONS*

A. It is the responsibility of the general contractor/construction manager to maintain project/site conditions acceptable for the installation of the indoor resilient multipurpose flooring.

B. The area in which the indoor resilient multipurpose surfacing will be installed shall be dry and weather tight. Permanent heat, light and ventilation shall be installed and operable.

C. All other trades shall have completed their work prior to the installation of the resilient athletic flooring. The general contractor or construction manager shall maintain a secure and clean working environment before, during and after the installation.

D. Maintain a stable room temperature of at least 65°F for a minimum of one (1) week prior to, during and thereafter installation.

E. An effective low-permeance vapor barrier is placed directly beneath the concrete subfloor. For "on" or "below grade" installations, it is recommended to provide a permanent vapor barrier resistant to long term hydrostatic pressure/moisture exposure. Protrusions should be sealed to prevent moisture migration into the slab. Moisture should not be allowed to enter the slab after the completed construction.

F. Concrete subfloor surface pH level within the 7 to 11 range dependent upon installation type.

G. Concrete subfloor should be no greater than 1/8" within a 10 ft diameter. This tolerance can be measured in accordance with ASTM E1155. A specified (F_F) of 50 and an (F_L) of 30 should reach this degree of floor flatness and floor level. There is no numerical correlation between F numbers and the deviation from the straight

edge. However, the above specified numbers should achieve a flat floor with minimal deviation in the slab. Reference ACI 117 and ACI 302.1R. The general contractor should provide a certificate of compliance with the above recommendations.

H. Concrete subfloor must be clean and free of all foreign materials or objects including, but not limited to, curing compounds and sealers.

I. Fill cracks, grooves, voids, depressions, and other minor imperfections. Follow the manufacturer's directions. Moveable joints must be treated utilizing specific transitioning joint devices depending upon the architect's recommendations. Follow current ASTM F710 guidelines for the preparation of concrete slabs to receive resilient flooring.

J. Refer to ACI 302.2R "Guidelines for Concrete Slabs that Receive Moisture-Sensitive Flooring Materials" for concrete design and construction.

K. Concrete slab shall be fortified with continual steel reinforcement. Fiber reinforcement alone shall not be considered adequate fortification.

1.6 *WARRANTY*

A. Special Limited Warranty:
   1. Manufacturer's standard form in which manufacturer agrees to repair or replace sports flooring including labor that fails within specified warranty period.

B. Material warranty must be direct from the product manufacturer.
   1. Material warranties must come from original manufacturer or division thereof. Private label warranties from distributors or brokers are not valid. Supply original point of manufacturing upon request.

C. Failures include, but are not limited to, the following:
   1. Material manufacturing defects.
   2. Surface wear and deterioration to the point of wear-through of wear layer per ASTM F410/ASTM F1303.
   3. Failure due to substrate moisture exposure exceeding 98 percent relative humidity when tested according to ASTM F2170.

D. Warranty Period:
   1. <u>For material defects and surface wear-through:</u> **25** years from date of substantial completion.
   2. <u>For moisture vapor tolerance:</u> **25** years from date of substantial completion.

E. Installer's Limited Warranty:
   1. Installer's standard form in which installer agrees to repair or replace sports flooring that fails due to poor workmanship or faulty installation within the specified warranty period.
   2. Warranty Period: 2 years from date of substantial completion.

1.7 *ADDITIONAL MATERIALS*

A. Furnish to the owner additional materials containing a total of at least 1% of each different color or design of the indoor resilient athletic surfacing used on the project.

1.8 *LEED™ CERTIFICATION*

A. The indoor resilient athletic surfacing should be able to help this facility to achieve points towards *LEED™ certification.* Flooring system must be certified by FloorScore.
B. LEED categories positively affected by the indoor resilient athletic surfacing:

LEED™ V4 Credit		Contribution
Materials & Resources: Building Product Disclosure & Optimization (BPDO)		
MRc3: Sourcing of Raw Materials	Options 1 & 2	2 Points
MRc4: Material Ingredients	Option 1	1 Point
MRc5: Construction and Demolition Management	Reclamation and Recycling	ReStart® Program
Indoor Environmental Quality		
EQc2: Low-Emitting Materials	TVOC: 0.5 mg/m3 or less	FloorScore®

PART 2 - PRODUCTS

2.1 *MANUFACTURERS*

A. The basis of the design for the indoor resilient multipurpose surfacing is Omnisports Active+ as manufactured by Tarkett.
B. All other installation accessories and related components must be either made or approved by the indoor resilient athletic surfacing manufacturer.
C. Other products may be approved as equal if deemed qualified and submitted in accordance with the General Conditions.
D. Test reports confirming compliance from an independent sports laboratory must be provided along with samples, technical data, installation, maintenance, and warranty prior to acceptance as an alternative product.

2.2 *MATERIALS*

A. Omnisports Active+ - Prefabricated sport surface 8.1 mm (0.14”) with wood flooring design, single surface embossing and Extreme Three (3) Layers technology (X3LT) as supplied by Tarkett.
   1. Embossing of wood design and solid colors must be the same; varying embossing or surface textures will not be allowed.
   2. Printing of wood design shall closely resemble standard wood strip flooring in size, color, board length, and grain appearance.
   3. Surface embossing combined with TopClean XP must offer proper balance of surface friction per the ASTM F2772.
   4. Surface embossing combined with TopClean XP must provide resistance to stains and scratches. Surface profile must not incorporate linear embossing.
   5. The wood design shall be protected by a clear layer of pure PVC (Polyvinyl Chloride) and TopClean XP, a factory-applied UV cured urethane treatment.
   6. Extreme Three (3) Layers technology (X3LT) includes Omnisports XCS cushion, glass veil and calendared sheet must offer improved shock absorbing comfort while providing better indentation recovery

7. The XCS cushion force reduction layer shall be high-density closed cell PVC foam with honeycomb embossing, and is applied in one continuous manufacturing process.
8. Laminated or adhered foam layers will not be allowed.
9. Field constructed products will not be accepted.

A. Physical properties of the indoor resilient athletic surfacing shall conform to the following minimums:

Width	—	6’ 6” (2 m)
Length	—	85’ (25.9m) approx.
Wear Layer	—	2 mm
Total Thickness	—	8.1 mm
Wear Layer	Type 1– Grade 1	ASTM F1303/F410
Vertical Deformation	PASSED	ASTM F2772
Rolling Load	PASSED	0.30 (EN 1569 {11/1999})
Surface Finish Effect	PASSED	ASTM F2772 (80 – 110)
Chemical Resistance	Excellent	ASTM F925
Impact Resistance	PASSED	EN 1717
Abrasion Resistance	PASSED	0.10 (EN ISO 5470-1 {06/1999})
Static Load Limit	PASSED	ASTM F970- Load 175 Lbs
Sound Insulation	Excellent	+/= 19 dB (ISO 717/2)
In-Room Sound Insulation	Excellent	61dB (NF S31-074)
Ball Rebound	PASSED	ASTM F2772 > 90%
Force Reduction	PASSED	ASTM F2772 Class 3
Fire Rating	PASSED	ASTM E648 Class 1
Microbial Assays Test	No Growth	G21 ASTM - Backing
Asthma and Allergy Friendly™	ASP: 05-01/101	Certified Compliant
Phthalate-free technology	—	YES
VOC	<10µg/m³	ASTM D5116 (small chamber)
REACH Compliant	—	YES
Heavy Metals	—	NO
ISO 9001	—	YES
ISO 14001	—	YES

1. Color: As available from the indoor resilient athletic surfacing manufacturer’s standard range.
2. Hardwood Design Series: High definition printing for a realistic wood surface appearance as available from the indoor resilient athletic surfacing manufacturer’s standard range.
3. Texture: Texture to remain consistent between solid colors and wood design when blending colors.

C. Welding Rod: As supplied by the indoor resilient athletic surfacing manufacturer or supplier.
   1. Color to blend with the indoor resilient athletic surfacing color or design.
   2. All seams shall be welded to create a monolithic and impermeable surface.

D. Adhesive: As approved by the indoor resilient athletic surfacing manufacturer.

E. Game Line Paint and Primer: As approved by the indoor resilient athletic surfacing manufacturer.

PART 3 - EXECUTION

3.1 *EXAMINATION*

A. It is the responsibility of the general contractor/construction manager to ensure that project/site conditions are acceptable for the installation of the indoor resilient athletic flooring.
B. Verify that the area in which the indoor resilient athletic surfacing will be installed is dry and weather tight. Verify that permanent heat, light and ventilation are installed and operable.
C. Verify that all other work that could cause damage, dirt and dust or interrupt the normal pace of the indoor resilient athletic flooring installation is completed or suspended.
D. Verify that there is a stable room temperature of at least 65◦F.
E. Verify that there are no foreign materials or objects on the subfloor and that the subfloor is clean and ready for installation.
F. *Direct Full Spread Adhering to Concrete Subfloor Multi-Poxy : moisture content less than 98% RH when tested per ASTM F2170.*
G. Follow Fieldturf USA, Inc. installation recommendations.
H. Do not average the results of the tests. Report all field test results in writing to the General Contractor, Architect, and End User prior to installation.
I. Verify that the concrete subfloor surface pH level is within the 7 - 11 range.
J. Document the results confirming the slab is within manufacturer's tolerances for slab deviation.

3.2 *PREPARATION OF SURFACES*

A. Sand the entire surface of the concrete slab.
B. Sweep the concrete slab so as to remove all dirt and dust. If a sweeping compound is to be used it must be a sweeping compound that does not contain oil or other items that may inhibit the adhesive bond.
C. Slab must be dust free. In the event that dust impairs adhesive bond, priming the slab prior to application of adhesive may be necessary. Follow installation guidelines.
D. Follow OSHA guidelines.

3.3 *INSTALLATION*

A. The installation area shall be closed to all traffic and activity for a period to be set by the indoor resilient athletic surfacing installer. The indoor resilient athletic surfacing installation shall not begin until the installer is familiar with the existing conditions.
B. All necessary precautions should be taken to minimize noise, smell, dust, the use of hazardous materials and any other items that may inconvenience others.
C. Install the indoor resilient athletic surfacing in strict accordance with the indoor resilient athletic surfacing manufacturer's written instructions.
D. Install the indoor resilient athletic surfacing minimizing cross seams. Provide a seam diagram during the submittal process for approval prior to installation. Vinyl Sheet Flooring Seams: Comply with ASTM F 1516. Rout joints and heat weld to permanently and seamlessly fuse sections together.
E. Paint game lines using approved game line paint primer and game line paint in strict accordance with the game line paint manufacturer's instructions.
F. Install appropriate threshold plates or transition strips where necessary.

3.5 *CLEANING*

A. Remove all unused materials, tools, and equipment and dispose of any debris properly. Clean the indoor resilient athletic surfacing in accordance with the manufacturer's instructions.

3.6 *PROTECTION*

A. If required, protect the indoor resilient athletic surfacing from damage using coverings approved by the manufacturer until acceptance of work by the customer or their authorized representative.

3.7 *RELATED STANDARDS AND GUIDELINES*

A. ASTM F2170 "Standard Test Method for Determining Relative Humidity In Concrete Floor Slabs Using In-Situ Probes"
B. ASTM F710 "Standard Practice for Preparing Concrete Floors to Receive Resilient Flooring"
C. ACI 302.2R-06 "Guideline for Concrete Slabs that Receive Moisture-Sensitive Flooring Materials"
D. ASTM F2772-11 "Standard Specification for Athletic Performance Properties of Indoor Sports Floor Systems"

END OF SECTION

SECTION 09 65 66
ARCHITECTURAL SPECIFICATIONS FOR INDOOR RESILIENT ATHLETIC SURFACING

PART 1 – GENERAL

1.1 *SECTION INCLUDES*

A. Supply and installation of the indoor resilient multipurpose surfacing
B. Application of the game lines
C. References for the correct construction and preparation of concrete slabs to receive resilient flooring.

1.2 *SUBMITTALS*

A. Product Data:
   1. Manufacturer's promotional brochures, specifications and installation instructions
B. Manufacturer Certifications:
   1. Provide certification that accurately identifies the Original Equipment Manufacturer (OEM) of flooring furnished for this project including manufacturer's name, address and factory location.
   2. Suppliers of private label flooring for this project must identify themselves as such and fully disclose the OEM information listed above.
   3. All "manufacturer" requirements in these specifications must be complied with by the OEM, including warranties, certifications, qualifications, product data, test results, environmental requirements, performance data, etc.
C. Samples:
   1. Submit for selection and approval three (3) sets of the indoor resilient multipurpose surfacing, manufacturer's brochures, samples or sample boards of all of the available colors, textures and styles.
   2. Submit color samples of all the available game line paint colors for selection and approval.
D. Closeout Submittals:
   1. Submit three (3) copies of the indoor resilient multipurpose surfacing and manufacturer's maintenance instructions.
   2. Submit three (3) copies of the material and installation warranties as specified.

1.3 *QUALITY ASSURANCE*

A. Qualifications:
   1. The indoor resilient multipurpose surfacing shall have been actively marketed for a minimum of ten (10) years.
   2. The indoor resilient multipurpose surfacing shall be manufactured in an ISO 9001 certified plant.
   3. The indoor resilient multipurpose surfacing shall be manufactured in an ISO 14001 certified plant.
   4. The indoor resilient multipurpose surfacing supplier shall be an established firm, experienced in the field, and competent in the techniques required by the manufacturer.
   5. The installer of the indoor resilient multipurpose surfacing shall have a minimum of five (5) years of experience in the field installing indoor resilient multipurpose surfacing and have worked on at least five (5) projects of similar size, type and complexity.

B. Certifications:
   1. Installer to submit the indoor resilient athletic surfacing manufacturer's or distributor's certification attesting that they are an approved installer of the indoor resilient multipurpose surfacing.
   2. The ind**o**or resilient multipurpose surfacing manufacturer to submit official ISO 9001 certification for the facility in which the indoor resilient multipurpose surfacing is manufactured.

C. Testing:
   Tests shall be relative for multi-purpose use with certificates from independent testing resources to be made available upon request. Test results shall be performed according to ASTM standard testing procedures including ASTM F2772 "Standard Specification for Athletic Performance Properties of Indoor Sports Floor Systems".

1.4 *DELIVERY, STORAGE AND HANDLING*

A. Delivery:
   Material shall not be delivered until all related work is in place and finished and/or proper storage facilities and conditions can be provided and guaranteed stable according to FieldTurf USA, Inc. recommendations.

B. Storage:
   1. Store the material in a secure, clean and dry location.
   2. Maintain temperature between 55° and 85° Fahrenheit.
   3. Store the indoor resilient athletic surfacing rolls in an upright position on a smooth flat surface immediately upon delivery to jobsite.
   4. Rolls shipped in rigid protective cardboard containers can be laid horizontally prior to unpacking and installation.

1.5 *PROJECT/SITE CONDITIONS*

A. It is the responsibility of the general contractor/construction manager to maintain project/site conditions acceptable for the installation of the indoor resilient multipurpose flooring.

B. The area in which the indoor resilient multipurpose surfacing will be installed shall be dry and weather tight. Permanent heat, light and ventilation shall be installed and operable.

C. All other trades shall have completed their work prior to the installation of the resilient athletic flooring. The general contractor or construction manager shall maintain a secure and clean working environment before, during and after the installation.

D. Maintain a stable room temperature of at least 65°F for a minimum of one (1) week prior to, during and thereafter installation.

E. An effective low-permeance vapor barrier is placed directly beneath the concrete subfloor. For "on" or "below grade" installations, it is recommended to provide a permanent vapor barrier resistant to long term hydrostatic pressure/moisture exposure. Protrusions should be sealed to prevent moisture migration into the slab. Moisture should not be allowed to enter the slab after the completed construction.

F. Concrete subfloor surface pH level within the 7 to 10 range dependent upon installation type.

G. Concrete subfloor should be no greater than 1/8" within a 10 ft diameter. This tolerance can be measured in accordance with ASTM E1155. A specified (F_F) of 50 and an (F_L) of 30 should reach this degree of floor flatness and floor level. There is no numerical correlation between F numbers and the deviation from the straight

edge. However, the above specified numbers should achieve a flat floor with minimal deviation in the slab. Reference ACI 117 and ACI 302.1R. The general contractor should provide a certificate of compliance with the above recommendations.

H. Concrete subfloor must be clean and free of all foreign materials or objects including, but not limited to, curing compounds and sealers.

I. Fill cracks, grooves, voids, depressions, and other minor imperfections. Follow the manufacturer's directions. Moveable joints must be treated utilizing specific transitioning joint devices depending upon the architect's recommendations. Follow current ASTM F710 guidelines for the preparation of concrete slabs to receive resilient flooring.

J. Refer to ACI 302.2R "Guidelines for Concrete Slabs that Receive Moisture-Sensitive Flooring Materials" for concrete design and construction.

K. Concrete slab shall be fortified with continual steel reinforcement. Fiber reinforcement alone shall not be considered adequate fortification.

1.6 *WARRANTY*

A. Special Limited Warranty:
   1. Manufacturer's standard form in which manufacturer agrees to repair or replace sports flooring including labor that fails within specified warranty period.

B. Material warranty must be direct from the product manufacturer.
   1. Material warranties must come from original manufacturer or division thereof. Private label warranties from distributors or brokers are not valid. Supply original point of manufacturing upon request.

C. Failures include, but are not limited to, the following:
   1. Material manufacturing defects.
   2. Surface wear and deterioration to the point of wear-through of wear layer per ASTM F410/ASTM F1303.
   3. Failure due to substrate moisture exposure exceeding 98 percent relative humidity when tested according to ASTM F2170.

D. Warranty Period:
   1. <u>For material defects and surface wear-through:</u> **25** years from date of substantial completion.
   2. <u>For moisture vapor tolerance:</u> **25** years from date of substantial completion.

E. Installer's Limited Warranty:
   1. Installer's standard form in which installer agrees to repair or replace sports flooring that fails due to poor workmanship or faulty installation within the specified warranty period.
   2. Warranty Period: 2 years from date of substantial completion.

1.7 *ADDITIONAL MATERIALS*

A. Furnish to the owner additional materials containing a total of at least 1% of each different color or design of the indoor resilient athletic surfacing used on the project.

1.8 *LEED™ CERTIFICATION*

A. The indoor resilient athletic surfacing should be able to help this facility to achieve points towards *LEED™ certification.* Flooring system must be certified by FloorScore.
B. LEED categories positively affected by the indoor resilient athletic surfacing:

LEED™ V4 Credit		Contribution
Materials & Resources: Building Product Disclosure & Optimization (BPDO)		
MRc3: Sourcing of Raw Materials	Options 1 & 2	2 Points
MRc4: Material Ingredients	Option 1	1 Point
MRc5: Construction and Demolition Management	Reclamation and Recycling	ReStart® Program
Indoor Environmental Quality		
EQc2: Low-Emitting Materials	TVOC: 0.5 mg/m3 or less	FloorScore®

PART 2 - PRODUCTS

2.1 *MANUFACTURERS*

A. The basis of the design for the indoor resilient multipurpose surfacing is Omnisports Active+ as manufactured by Tarkett.
B. All other installation accessories and related components must be either made or approved by the indoor resilient athletic surfacing manufacturer.
C. Other products may be approved as equal if deemed qualified and submitted in accordance with the General Conditions.
D. Test reports confirming compliance from an independent sports laboratory must be provided along with samples, technical data, installation, maintenance, and warranty prior to acceptance as an alternative product.

2.2 *MATERIALS*

A. Omnisports Active+ - Prefabricated sport surface 8.1 mm (0.14”) with wood flooring design, single surface embossing and Extreme Three (3) Layers technology (X3LT) as supplied by Tarkett.
   1. Embossing of wood design and solid colors must be the same; varying embossing or surface textures will not be allowed.
   2. Printing of wood design shall closely resemble standard wood strip flooring in size, color, board length, and grain appearance.
   3. Surface embossing combined with TopClean XP must offer proper balance of surface friction per the ASTM F2772.
   4. Surface embossing combined with TopClean XP must provide resistance to stains and scratches. Surface profile must not incorporate linear embossing.
   5. The wood design shall be protected by a clear layer of pure PVC (Polyvinyl Chloride) and TopClean XP, a factory-applied UV cured urethane treatment.
   6. Extreme Three (3) Layers technology (X3LT) includes Omnisports XCS cushion, glass veil and calendared sheet must offer improved shock absorbing comfort while providing better indentation recovery

7. The XCS cushion force reduction layer shall be high-density closed cell PVC foam with honeycomb embossing, and is applied in one continuous manufacturing process.
8. Laminated or adhered foam layers will not be allowed.
9. Field constructed products will not be accepted.

A. Physical properties of the indoor resilient athletic surfacing shall conform to the following minimums:

Width	—	6’ 6” (2 m)
Length	—	85’ (25.9m) approx.
Wear Layer	—	2 mm
Total Thickness	—	8.1 mm
Wear Layer	Type 1– Grade 1	ASTM F1303/F410
Vertical Deformation	PASSED	ASTM F2772
Rolling Load	PASSED	0.30 (EN 1569 {11/1999})
Surface Finish Effect	PASSED	ASTM F2772 (80 – 110)
Chemical Resistance	Excellent	ASTM F925
Impact Resistance	PASSED	EN 1717
Abrasion Resistance	PASSED	0.10 (EN ISO 5470-1 {06/1999})
Static Load Limit	PASSED	ASTM F970- Load 175 Lbs
Sound Insulation	Excellent	+/= 19 dB (ISO 717/2)
In-Room Sound Insulation	Excellent	61dB (NF S31-074)
Ball Rebound	PASSED	ASTM F2772 > 90%
Force Reduction	PASSED	ASTM F2772 Class 3
Fire Rating	PASSED	ASTM E648 Class 1
Microbial Assays Test	No Growth	G21 ASTM - Backing
Asthma and Allergy Friendly™	ASP: 05-01/101	Certified Compliant
Phthalate-free technology	—	YES
REACH Compliant	—	YES
Heavy Metals	—	NO
ISO 9001	—	YES
ISO 14001	—	YES

1. Color: As available from the indoor resilient athletic surfacing manufacturer’s standard range.
2. Hardwood Design Series: A wood look design as available from the indoor resilient athletic surfacing manufacturer’s standard range.
3. Texture: Texture to remain consistent between solid colors and wood design when blending colors.

C. Welding Rod: As supplied by the indoor resilient athletic surfacing manufacturer or supplier.
   1. Color to blend with the indoor resilient athletic surfacing color or design.
   2. All seams shall be welded to create a monolithic and impermeable surface.

D. Adhesive: As approved by the indoor resilient athletic surfacing manufacturer.

E. Game Line Paint and Primer: As approved by the indoor resilient athletic surfacing manufacturer.

PART 3 - EXECUTION

3.1 *EXAMINATION*

A. It is the responsibility of the general contractor/construction manager to ensure that project/site conditions are acceptable for the installation of the indoor resilient athletic flooring.
B. Verify that the area in which the indoor resilient athletic surfacing will be installed is dry and weather tight. Verify that permanent heat, light and ventilation are installed and operable.
C. Verify that all other work that could cause damage, dirt and dust or interrupt the normal pace of the indoor resilient athletic flooring installation is completed or suspended.
D. Verify that there is a stable room temperature of at least 65◦F.
E. Verify that there are no foreign materials or objects on the subfloor and that the subfloor is clean and ready for installation.
F. *Direct Full Spread Adhering to Concrete Subfloor Multi-Set : moisture content less than 83% RH when tested per ASTM F2170.*
G. Follow Fieldturf USA, Inc installation recommendations.
H. Do not average the results of the tests. Report all field test results in writing to the General Contractor, Architect, and End User prior to installation.
I. Verify that the concrete subfloor surface pH level is within the 7 - 10 range.
J. Document the results indicating the slab is within manufacturer's tolerances for slab deviation.

3.2 *PREPARATION OF SURFACES*

A. Sand the entire surface of the concrete slab.
B. Sweep the concrete slab so as to remove all dirt and dust. If a sweeping compound is to be used it must be a sweeping compound that does not contain oil or other items that may inhibit the adhesive bond.
C. Slab must be dust free. In the event that dust impairs adhesive bond, priming the slab prior to application of adhesive may be necessary. Follow installation guidelines.

3.3 *INSTALLATION*

A. The installation area shall be closed to all traffic and activity for a period to be set by the indoor resilient athletic surfacing installer. The indoor resilient athletic surfacing installation shall not begin until the installer is familiar with the existing conditions.
B. All necessary precautions should be taken to minimize noise, smell, dust, the use of hazardous materials and any other items that may inconvenience others.
C. Install the indoor resilient athletic surfacing in strict accordance with the indoor resilient athletic surfacing manufacturer's written instructions.
D. Install the indoor resilient athletic surfacing minimizing cross seams. Provide a seam diagram during the submittal process for approval prior to installation. Vinyl Sheet Flooring Seams: Comply with ASTM F 1516. Rout joints and heat weld to permanently and seamlessly fuse sections together. Apply transitions at doorways as needed.
E. Paint game lines using approved game line paint primer and game line paint in strict accordance with the game line paint manufacturer's instructions.
F. Install appropriate threshold plates or transition strips where necessary.

3.5 *CLEANING*

A. Remove all unused materials, tools, and equipment and dispose of any debris properly. Clean the indoor resilient athletic surfacing in accordance with the manufacturer's instructions.

3.6 *PROTECTION*

A. If required, protect the indoor resilient athletic surfacing from damage using coverings approved by the manufacturer until acceptance of work by the customer or their authorized representative.

3.7 *RELATED STANDARDS AND GUIDELINES*

A. ASTM F2170 "Standard Test Method for Determining Relative Humidity In Concrete Floor Slabs Using In-Situ Probes"
B. ASTM F710 "Standard Practice for Preparing Concrete Floors to Receive Resilient Flooring"
C. ACI 302.2R-06 "Guideline for Concrete Slabs that Receive Moisture-Sensitive Flooring Materials"
D. ASTM F2772-11 "Standard Specification for Athletic Performance Properties of Indoor Sports Floor Systems"

END OF SECTION

SECTION 09 65 66
ARCHITECTURAL SPECIFICATIONS FOR INDOOR RESILIENT ATHLETIC SURFACING

PART 1 – GENERAL

1.1 *SECTION INCLUDES*

A. Supply and installation of the indoor resilient multipurpose surfacing
B. Application of the game lines
C. References for the correct construction and preparation of concrete slabs to receive resilient flooring.

1.2 *SUBMITTALS*

A. Product Data:
   1. Manufacturer's promotional brochures, specifications and installation instructions
B. Manufacturer Certifications:
   1. Provide certification that accurately identifies the Original Equipment Manufacturer (OEM) of flooring furnished for this project including manufacturer's name, address and factory location.
   2. Suppliers of private label flooring for this project must identify themselves as such and fully disclose the OEM information listed above.
   3. All "manufacturer" requirements in these specifications must be complied with by the OEM, including warranties, certifications, qualifications, product data, test results, environmental requirements, performance data, etc.
C. Samples:
   1. Submit for selection and approval three (3) sets of the indoor resilient multipurpose surfacing, manufacturer's brochures, samples or sample boards of all of the available colors, textures and styles.
   2. Submit color samples of all the available game line paint colors for selection and approval.
D. Closeout Submittals:
   1. Submit three (3) copies of the indoor resilient multipurpose surfacing and manufacturer's maintenance instructions.
   2. Submit three (3) copies of the material and installation warranties as specified.

1.3 *QUALITY ASSURANCE*

A. Qualifications:
   1. The indoor resilient multipurpose surfacing shall have been actively marketed for a minimum of ten (10) years.
   2. The indoor resilient multipurpose surfacing shall be manufactured in an ISO 9001 certified plant.
   3. The indoor resilient multipurpose surfacing shall be manufactured in an ISO 14001 certified plant.
   4. The indoor resilient multipurpose surfacing supplier shall be an established firm, experienced in the field, and competent in the techniques required by the manufacturer.
   5. The installer of the indoor resilient multipurpose surfacing shall have a minimum of five (5) years of experience in the field installing indoor resilient multipurpose surfacing and have worked on at least five (5) projects of similar size, type and complexity.

B. Certifications:
   1. Installer to submit the indoor resilient athletic surfacing manufacturer's or distributor's certification attesting that they are an approved installer of the indoor resilient multipurpose surfacing.
   2. The ind**o**or resilient multipurpose surfacing manufacturer to submit official ISO 9001 certification for the facility in which the indoor resilient multipurpose surfacing is manufactured.

C. Testing:
   Tests shall be relative for multi-purpose use with certificates from independent testing resources to be made available upon request. Test results shall be performed according to ASTM standard testing procedures including ASTM F2772 "Standard Specification for Athletic Performance Properties of Indoor Sports Floor Systems".

1.4 *DELIVERY, STORAGE AND HANDLING*

A. Delivery:
   Material shall not be delivered until all related work is in place and finished and/or proper storage facilities and conditions can be provided and guaranteed stable according to FieldTurf USA, Inc. recommendations.

B. Storage:
   1. Store the material in a secure, clean and dry location.
   2. Maintain temperature between 55° and 85° Fahrenheit.
   3. Store the indoor resilient athletic surfacing rolls in an upright position on a smooth flat surface immediately upon delivery to jobsite.
   4. Rolls shipped in rigid protective cardboard containers can be laid horizontally prior to unpacking and installation.

1.5 *PROJECT/SITE CONDITIONS*

A. It is the responsibility of the general contractor/construction manager to maintain project/site conditions acceptable for the installation of the indoor resilient multipurpose flooring.

B. The area in which the indoor resilient multipurpose surfacing will be installed shall be dry and weather tight. Permanent heat, light and ventilation shall be installed and operable.

C. All other trades shall have completed their work prior to the installation of the resilient athletic flooring. The general contractor or construction manager shall maintain a secure and clean working environment before, during and after the installation.

D. Maintain a stable room temperature of at least 65°F for a minimum of one (1) week prior to, during and thereafter installation.

E. An effective low-permeance vapor barrier is placed directly beneath the concrete subfloor. For "on" or "below grade" installations, it is recommended to provide a permanent vapor barrier resistant to long term hydrostatic pressure/moisture exposure. Protrusions should be sealed to prevent moisture migration into the slab. Moisture should not be allowed to enter the slab after the completed construction.

F. Concrete subfloor surface pH level within the 7 to 11 range dependent upon installation type.

G. Concrete subfloor should be no greater than 1/8" within a 10 ft diameter. This tolerance can be measured in accordance with ASTM E1155. A specified (F_F) of 50 and an (F_L) of 30 should reach this degree of floor flatness and floor level. There is no numerical correlation between F numbers and the deviation from the straight

edge. However, the above specified numbers should achieve a flat floor with minimal deviation in the slab. Reference ACI 117 and ACI 302.1R. The general contractor should provide a certificate of compliance with the above recommendations.

H. Concrete subfloor must be clean and free of all foreign materials or objects including, but not limited to, curing compounds and sealers.

I. Fill cracks, grooves, voids, depressions, and other minor imperfections. Follow the manufacturer's directions. Moveable joints must be treated utilizing specific transitioning joint devices depending upon the architect's recommendations. Follow current ASTM F710 guidelines for the preparation of concrete slabs to receive resilient flooring.

J. Refer to ACI 302.2R "Guidelines for Concrete Slabs that Receive Moisture-Sensitive Flooring Materials" for concrete design and construction.

K. Concrete slab shall be fortified with continual steel reinforcement. Fiber reinforcement alone shall not be considered adequate fortification.

1.6 *WARRANTY*

A. Special Limited Warranty:
   1. Manufacturer's standard form in which manufacturer agrees to repair or replace sports flooring including labor that fails within specified warranty period.

B. Material warranty must be direct from the product manufacturer.
   1. Material warranties must come from original manufacturer or division thereof. Private label warranties from distributors or brokers are not valid. Supply original point of manufacturing upon request.

C. Failures include, but are not limited to, the following:
   1. Material manufacturing defects.
   2. Surface wear and deterioration to the point of wear-through of wear layer per ASTM F410/ASTM F1303.
   3. Failure due to substrate moisture exposure exceeding 98 percent relative humidity when tested according to ASTM F2170.

D. Warranty Period:
   1. <u>For material defects and surface wear-through:</u> **25** years from date of substantial completion.
   2. <u>For moisture vapor tolerance:</u> **25** years from date of substantial completion.

E. Installer's Limited Warranty:
   1. Installer's standard form in which installer agrees to repair or replace sports flooring that fails due to poor workmanship or faulty installation within the specified warranty period.
   2. Warranty Period: 2 years from date of substantial completion.

1.7 *ADDITIONAL MATERIALS*

A. Furnish to the owner additional materials containing a total of at least 1% of each different color or design of the indoor resilient athletic surfacing used on the project.

1.8 *LEED™ CERTIFICATION*

A. The indoor resilient athletic surfacing should be able to help this facility to achieve points towards *LEED™ certification.* Flooring system must be certified by FloorScore.
B. LEED categories positively affected by the indoor resilient athletic surfacing:

LEED™ V4 Credit		Contribution
Materials & Resources: Building Product Disclosure & Optimization (BPDO)		
MRc3: Sourcing of Raw Materials	Options 1 & 2	2 Points
MRc4: Material Ingredients	Option 1	1 Point
MRc5: Construction and Demolition Management	Reclamation and Recycling	ReStart® Program
Indoor Environmental Quality		
EQc2: Low-Emitting Materials	TVOC: 0.5 mg/m3 or less	FloorScore®

PART 2 - PRODUCTS

2.1 *MANUFACTURERS*

A. The basis of the design for the indoor resilient multipurpose surfacing is Omnisports Active+ as manufactured by Tarkett.
B. All other installation accessories and related components must be either made or approved by the indoor resilient athletic surfacing manufacturer.
C. Other products may be approved as equal if deemed qualified and submitted in accordance with the General Conditions.
D. Test reports confirming compliance from an independent sports laboratory must be provided along with samples, technical data, installation, maintenance, and warranty prior to acceptance as an alternative product.

2.2 *MATERIALS*

A. Omnisports Active+ - Prefabricated sport surface 8.1 mm (0.14”) with wood flooring design, single surface embossing and Extreme Three (3) Layers technology (X3LT) as supplied by Tarkett.
   1. Embossing of wood design and solid colors must be the same; varying embossing or surface textures will not be allowed.
   2. Printing of wood design shall closely resemble standard wood strip flooring in size, color, board length, and grain appearance.
   3. Surface embossing combined with TopClean XP must offer proper balance of surface friction per the ASTM F2772.
   4. Surface embossing combined with TopClean XP must provide resistance to stains and scratches. Surface profile must not incorporate linear embossing.
   5. The wood design shall be protected by a clear layer of pure PVC (Polyvinyl Chloride) and TopClean XP, a factory-applied UV cured urethane treatment.
   6. Extreme Three (3) Layers technology (X3LT) includes Omnisports XCS cushion, glass veil and calendared sheet must offer improved shock absorbing comfort while providing better indentation recovery

7. The XCS cushion force reduction layer shall be high-density closed cell PVC foam with honeycomb embossing, and is applied in one continuous manufacturing process.
8. Laminated or adhered foam layers will not be allowed.
9. Field constructed products will not be accepted.

A. Physical properties of the indoor resilient athletic surfacing shall conform to the following minimums:

Width	—	6’ 6” (2 m)
Length	—	85’ (25.9m) approx.
Wear Layer	—	2 mm
Total Thickness	—	8.1 mm
Wear Layer	Type 1– Grade 1	ASTM F1303/F410
Vertical Deformation	PASSED	ASTM F2772
Rolling Load	PASSED	0.30 (EN 1569 {11/1999})
Surface Finish Effect	PASSED	ASTM F2772 (80 – 110)
Chemical Resistance	Excellent	ASTM F925
Impact Resistance	PASSED	EN 1717
Abrasion Resistance	PASSED	0.10 (EN ISO 5470-1 {06/1999})
Static Load Limit	PASSED	ASTM F970- Load 175 Lbs
Sound Insulation	Excellent	+/= 19 dB (ISO 717/2)
In-Room Sound Insulation	Excellent	61dB (NF S31-074)
Ball Rebound	PASSED	ASTM F2772 > 90%
Force Reduction	PASSED	ASTM F2772 Class 3
Fire Rating	PASSED	ASTM E648 Class 1
Microbial Assays Test	No Growth	G21 ASTM - Backing
Asthma and Allergy Friendly™	ASP: 05-01/101	Certified Compliant
Phthalate-free technology	—	YES
REACH Compliant	—	YES
Heavy Metals	—	NO
ISO 9001	—	YES
ISO 14001	—	YES

1. Color: As available from the indoor resilient athletic surfacing manufacturer’s standard range.
2. Hardwood Design Series: A wood look design as available from the indoor resilient athletic surfacing manufacturer’s standard range.
3. Texture: Texture to remain consistent between solid colors and wood design when blending colors.

C. Tarkolay – A high quality low permeance slip sheet vapor retarder designed to separate the installed system from the substrate below.
1. Tarkolay as manufactured by Tarkett can be used below, on, or above grade substrates that experience elevated moisture conditions.
2. Moisture tolerances shall have no limitation per ASTM F2170. Physical properties of the indoor resilient athletic surfacing shall conform to the following minimums:

Width	—	6’ 6” (2 m)
Length	—	147’7”’ (45 m) approx.
Total Thickness	—	1.3 mm
Dimensional Stability	PASSED	.01% (EN 1434)
Permeance	Excellent	<0.20 (ASTM E96

D. Welding Rod: As supplied by the indoor resilient athletic surfacing manufacturer or supplier.
   1. Color to blend with the indoor resilient athletic surfacing color or design.
   2. All seams shall be welded to create a monolithic and impermeable surface.
E. Adhesive: As approved by the indoor resilient athletic surfacing manufacturer.
F. Game Line Paint and Primer: As approved by the indoor resilient athletic surfacing manufacturer.

PART 3 - EXECUTION

3.1 *EXAMINATION*

A. It is the responsibility of the general contractor/construction manager to ensure that project/site conditions are acceptable for the installation of the indoor resilient athletic flooring.
B. Verify that the area in which the indoor resilient athletic surfacing will be installed is dry and weather tight. Verify that permanent heat, light and ventilation are installed and operable.
C. Verify that all other work that could cause damage, dirt and dust or interrupt the normal pace of the indoor resilient athletic flooring installation is completed or suspended.
D. Verify that there is a stable room temperature of at least 65°F.
E. Verify that there are no foreign materials or objects on the subfloor and that the subfloor is clean and ready for installation.
F. *Installation with Tarkolay to Concrete Subfloor : moisture content no limitation when tested per ASTM F2170.*
G. Follow Fieldturf USA, Inc. installation recommendations.
H. Do not average the results of the tests. Report all field test results in writing to the General Contractor, Architect, and End User prior to installation.
I. Verify that the concrete subfloor surface pH level is within the 7 - 11 range.
J. Document the results confirming the slab is within manufacturer's tolerances for slab deviation.

3.2 *PREPARATION OF SURFACES*

A. Sand the entire surface of the concrete slab.
B. Sweep the concrete slab so as to remove all dirt and dust. If a sweeping compound is to be used it must be a sweeping compound that does not contain oil or other items that may inhibit the adhesive bond.
C. Slab must be dust free. In the event that dust impairs adhesive bond, priming the slab prior to application of adhesive may be necessary. Follow installation guidelines.
D. Follow OSHA guidelines.

3.3 *INSTALLATION*

A. The installation area shall be closed to all traffic and activity for a period to be set by the indoor resilient athletic surfacing installer. The indoor resilient athletic surfacing installation shall not begin until the installer is familiar with the existing conditions.
B. All necessary precautions should be taken to minimize noise, smell, dust, the use of hazardous materials and any other items that may inconvenience others.
C. Install the indoor resilient athletic surfacing in strict accordance with the indoor resilient athletic surfacing manufacturer's written instructions.
D. Install the indoor resilient athletic surfacing minimizing cross seams. Provide a seam diagram during the submittal process for approval prior to installation. Vinyl Sheet Flooring Seams: Comply with ASTM F 1516. Rout joints and heat weld to permanently and seamlessly fuse sections together.
E. Paint game lines using approved game line paint primer and game line paint in strict accordance with the game line paint manufacturer's instructions.
F. Install appropriate threshold plates or transition strips where necessary.

3.5 *CLEANING*

A. Remove all unused materials, tools, and equipment and dispose of any debris properly. Clean the indoor resilient athletic surfacing in accordance with the manufacturer's instructions.

3.6 *PROTECTION*

A. If required, protect the indoor resilient athletic surfacing from damage using coverings approved by the manufacturer until acceptance of work by the customer or their authorized representative.

3.7 *RELATED STANDARDS AND GUIDELINES*

A. ASTM F2170 "Standard Test Method for Determining Relative Humidity In Concrete Floor Slabs Using In-Situ Probes"
B. ASTM F710 "Standard Practice for Preparing Concrete Floors to Receive Resilient Flooring"
C. ACI 302.2R-06 "Guideline for Concrete Slabs that Receive Moisture-Sensitive Flooring Materials"
D. ASTM F2772-11 "Standard Specification for Athletic Performance Properties of Indoor Sports Floor Systems"

END OF SECTION

SECTION 09 65 66
ARCHITECTURAL SPECIFICATIONS FOR INDOOR RESILIENT ATHLETIC SURFACING

PART 1 – GENERAL

1.1 *SECTION INCLUDES*

A. Supply and installation of the indoor resilient multipurpose surfacing
B. Application of the game lines
C. References for the correct construction and preparation of concrete slabs to receive resilient flooring.

1.2 *SUBMITTALS*

A. Product Data:
   1. Manufacturer's promotional brochures, specifications and installation instructions
B. Manufacturer Certifications:
   1. Provide certification that accurately identifies the Original Equipment Manufacturer (OEM) of flooring furnished for this project including manufacturer's name, address and factory location.
   2. Suppliers of private label flooring for this project must identify themselves as such and fully disclose the OEM information listed above.
   3. All "manufacturer" requirements in these specifications must be complied with by the OEM, including warranties, certifications, qualifications, product data, test results, environmental requirements, performance data, etc.
C. Samples:
   1. Submit for selection and approval three (3) sets of the indoor resilient multipurpose surfacing, manufacturer's brochures, samples or sample boards of all of the available colors, textures and styles.
   2. Submit color samples of all the available game line paint colors for selection and approval.
D. Closeout Submittals:
   1. Submit three (3) copies of the indoor resilient multipurpose surfacing and manufacturer's maintenance instructions.
   2. Submit three (3) copies of the material and installation warranties as specified.

1.3 *QUALITY ASSURANCE*

A. Qualifications:
   1. The indoor resilient multipurpose surfacing shall have been actively marketed for a minimum of ten (10) years.
   2. The indoor resilient multipurpose surfacing shall be manufactured in an ISO 9001 certified plant.
   3. The indoor resilient multipurpose surfacing shall be manufactured in an ISO 14001 certified plant.
   4. The indoor resilient multipurpose surfacing supplier shall be an established firm, experienced in the field, and competent in the techniques required by the manufacturer.
   5. The installer of the indoor resilient multipurpose surfacing shall have a minimum of five (5) years of experience in the field installing indoor resilient multipurpose surfacing and have worked on at least five (5) projects of similar size, type and complexity.

B. Certifications:
   1. Installer to submit the indoor resilient athletic surfacing manufacturer's certification attesting that they are a trained installer of the indoor resilient multipurpose surfacing.
   2. The indoor resilient multipurpose surfacing manufacturer to submit official ISO 9001 certification for the facility in which the indoor resilient multipurpose surfacing is manufactured.

C. Testing:
   1. Tests shall be relative for multi-purpose use with certificates from independent testing resources to be made available upon request.
   2. Test results shall be no more than 5 years old and performed according to ASTM standard testing procedures.

1.4 *DELIVERY, STORAGE AND HANDLING*

A. Delivery:
   Material shall not be delivered until all related work is in place and finished and/or proper storage facilities and conditions can be provided and guaranteed stable according to FieldTurf USA, Inc. recommendations.

B. Storage:
   1. Store the material in a secure, clean and dry location.
   2. Maintain temperature between 55° and 85° Fahrenheit.
   3. Store the indoor resilient athletic surfacing rolls in an upright position on a smooth flat surface immediately upon delivery to jobsite.
   4. Rolls shipped in rigid protective cardboard containers can be laid horizontally prior to unpacking and installation.

1.5 *PROJECT/SITE CONDITIONS*

A. It is the responsibility of the general contractor/construction manager to maintain project/site conditions acceptable for the installation of the indoor resilient multipurpose flooring.

B. The area in which the indoor resilient multipurpose surfacing will be installed shall be dry and weather tight. Permanent heat, light and ventilation shall be installed and operable.

C. All other trades shall have completed their work prior to the installation of the resilient athletic flooring. The general contractor or construction manager shall maintain a secure and clean working environment before, during and after the installation.

D. Maintain a stable room temperature of at least 65°F for a minimum of one (1) week prior to, during and thereafter installation.

E. An effective low-permeance vapor barrier is placed directly beneath the concrete subfloor. For "on" or "below grade" installations, it is recommended to provide a permanent vapor barrier resistant to long term hydrostatic pressure/moisture exposure. Protrusions should be sealed to prevent moisture migration into the slab. Moisture should not be allowed to enter the slab after the completed construction.

F. Concrete subfloor surface pH level within the 7 to 11 range dependent upon installation type.

G. Concrete subfloor should be no greater than 1/8" within a 10 ft diameter. This tolerance can be measured in accordance with ASTM E1155. A specified (F_F) of 50 and an (F_L) of 30 should reach this degree of floor flatness and floor level. There is no numerical correlation between F numbers and the deviation from the straight

edge. However, the above specified numbers should achieve a flat floor with minimal deviation in the slab. Reference ACI 117 and ACI 302.1R. The general contractor should provide a certificate of compliance with the above recommendations.

H. Concrete subfloor must be clean and free of all foreign materials or objects including, but not limited to, curing compounds and sealers.

I. Fill cracks, grooves, voids, depressions, and other minor imperfections. Follow the manufacturer's directions. Moveable joints must be treated utilizing specific transitioning joint devices depending upon the architect's recommendations. Follow current ASTM F710 guidelines for the preparation of concrete slabs to receive resilient flooring.

J. Refer to ACI 302.2R "Guidelines for Concrete Slabs that Receive Moisture-Sensitive Flooring Materials" for concrete design and construction.

K. Concrete slab shall be fortified with continual steel reinforcement. Fiber reinforcement alone shall not be considered adequate fortification.

1.6 *WARRANTY*

A. Special Limited Warranty:
   1. Manufacturer's standard form in which manufacturer agrees to repair or replace sports flooring including labor that fails within specified warranty period.

B. Material warranty must be direct from the product manufacturer.
   1. Material warranties from separate or third party insurance providers are not valid.
   2. Material warranties must come from original manufacturer or division thereof. Private label warranties from distributors or brokers are not valid. Supply original point of manufacturing upon request.

C. Failures include, but are not limited to, the following:
   1. Material manufacturing defects.
   2. Surface wear and deterioration to the point of wear-through of wear layer per ASTM F410/ASTM F1303.
   3. Failure due to substrate moisture exposure exceeding 80 percent relative humidity when tested according to ASTM F2170.

D. Warranty Period:
   1. <u>For material defects and surface wear-through:</u> **15** years from date of substantial completion.
   2. <u>For moisture vapor tolerance:</u> **10** years from date of substantial completion.

E. Installer's Limited Warranty:
   1. Installer's standard form in which installer agrees to repair or replace sports flooring that fails due to poor workmanship or faulty installation within the specified warranty period.
   2. Warranty Period: 2 years from date of substantial completion.

1.7 *ADDITIONAL MATERIALS*

A. Furnish to the owner additional materials containing a total of at least 1% of each different color or design of the indoor resilient athletic surfacing used on the project.

1.8 *LEED™ CERTIFICATION*

A. The indoor resilient athletic surfacing should be able to help this facility to achieve points towards *LEED™ certification.* Flooring system must be certified by FloorScore.
B. LEED categories positively affected by the indoor resilient athletic surfacing:

LEED™ V4 Credit		Contribution
Materials & Resources: Building Product Disclosure & Optimization (BPDO)		
MRc3: Sourcing of Raw Materials	Options 1 & 2	2 Points
MRc4: Material Ingredients	Option 1	1 Point
MRc5: Construction and Demolition Management	Reclamation and Recycling	ReStart® Program
Indoor Environmental Quality		
EQc2: Low-Emitting Materials	TVOC: 0.5 mg/m3 or less	FloorScore®

PART 2 - PRODUCTS

2.1 *MANUFACTURERS*

A. The basis of the design for the indoor resilient multipurpose surfacing is Omnisports 2.0 mm and Lumaflex Elite system as manufactured by Tarkett.
B. All other installation accessories and related components must be either made or approved by the indoor resilient athletic surfacing manufacturer.
C. Other products may be approved as equal if deemed qualified and submitted in accordance with the General Conditions.
D. Test reports confirming compliance from an independent sports laboratory must be provided along with samples, technical data, installation, maintenance, and warranty prior to acceptance as an alternative product.

2.2 *MATERIALS*

A. Omnisports 2.0 mm - Prefabricated sport surface 2.0 mm (0.08″) with wood flooring design and slightly textured embossed surface as supplied by Tarkett.
   1. Embossing of wood design and solid colors must be the same; varying embossing or surface textures will not be allowed.
   2. Printing of wood design shall closely resemble standard wood strip flooring in size, color, board length, and grain appearance.
   3. The wood design shall be protected by a clear layer of pure PVC (Polyvinyl Chloride) and TopClean xp, a factory-applied UV cured urethane treatment.
   4. Intermediate layers shall be fortified with a non-woven fiberglass grid for increased dimensional stability.
   5. The Lumaflex Elite System shall incorporate Lumaflex Elite double tongue and grooved multi-ply engineered panels, force reduction cushion, and appropriate vapor retarder.

B. Physical properties of the indoor resilient athletic surfacing shall conform to the following minimums:

Width	—	6′ 6″ (2 m)
Length	—	85′ (25.9m) approx.
Wear Layer	—	2 mm
Total Thickness	—	2.0 mm
Total Combined Thickness		1 ¼″ (33 mm approx.)
Wear Layer	Type 1– Grade 1	ASTM F1303/F410
Rolling Load	PASSED	0.30 (EN 1569 {11/1999})
Force Reduction	PASSED	ASTM F2772 Class 5
Surface Finish Effect	PASSED	ASTM F2772 (80 – 110)
Vertical Deformation	PASSED	ASTM F2772
Ball Rebound	PASSED	ASTM F2772 > 90%
Chemical Resistance	Excellent	ASTM F925
Impact Resistance	PASSED	EN 1717
Abrasion Resistance	PASSED	0.10 (EN ISO 5470-1 {06/1999})
Static Load Limit	PASSED	ASTM F970- Load 175 Lbs
Phthalate-free technology	—	YES
REACH Compliant	—	YES
Heavy Metals	—	NO
ISO 9001	—	YES
ISO 14001	—	YES

1. Color: As available from the indoor resilient athletic surfacing manufacturer's standard range.
2. Hardwood Design Series: A wood look design as available from the indoor resilient athletic surfacing manufacturer's standard range.
3. Texture: Texture to remain consistent between solid colors and wood design when blending colors.

C. Welding Rod: As supplied by the indoor resilient athletic surfacing manufacturer or supplier.
   1. Color to blend with the indoor resilient athletic surfacing color or design.
   2. All seams shall be welded to create a monolithic and impermeable surface.

D. Adhesive: As approved by the indoor resilient athletic surfacing manufacturer.

E. Game Line Paint and Primer: As approved by the indoor resilient athletic surfacing manufacturer.

PART 3 - EXECUTION

3.1 *EXAMINATION*

A. It is the responsibility of the general contractor/construction manager to ensure that project/site conditions are acceptable for the installation of the indoor resilient athletic flooring.
B. Verify that the area in which the indoor resilient athletic surfacing will be installed is dry and weather tight. Verify that permanent heat, light and ventilation are installed and operable.
C. Verify that all other work that could cause damage, dirt and dust or interrupt the normal pace of the indoor resilient athletic flooring installation is completed or suspended.
D. Verify that there is a stable room temperature of at least 65◦F.
E. Verify that there are no foreign materials or objects on the subfloor and that the subfloor is clean and ready for installation.
F. *Concrete Subfloor: moisture content less than 85% RH when tested per ASTM F2170.*
G. Follow Fieldturf USA, Inc. installation recommendations.
H. Do not average the results of the tests. Report all field test results in writing to the General Contractor, Architect, and End User prior to installation.
I. Verify that the concrete subfloor surface pH level is within the 7 - 11 range.
J. Document the results confirming the slab is within manufacturer's tolerances for slab deviation.

3.2 *PREPARATION OF SURFACES*

A. Sand the entire surface of the concrete slab.
B. Sweep the concrete slab so as to remove all dirt and dust. If a sweeping compound is to be used it must be a sweeping compound that does not contain oil or other items that may inhibit the adhesive bond.
C. Slab must be dust free. In the event that dust impairs adhesive bond, priming the slab prior to application of adhesive may be necessary. Follow installation guidelines.
D. Follow OSHA guidelines.

3.3 *INSTALLATION*

A. The installation area shall be closed to all traffic and activity for a period to be set by the indoor resilient athletic surfacing installer. The indoor resilient athletic surfacing installation shall not begin until the installer is familiar with the existing conditions.
B. All necessary precautions should be taken to minimize noise, smell, dust, the use of hazardous materials and any other items that may inconvenience others.
C. Install the indoor resilient athletic surfacing in strict accordance with the indoor resilient athletic surfacing manufacturer's written instructions.
D. Install the indoor resilient athletic surfacing minimizing cross seams. Provide a seam diagram during the submittal process for approval prior to installation. Vinyl Sheet Flooring Seams: Comply with ASTM F 1516. Rout joints and heat weld to permanently and seamlessly fuse sections together.
E. Paint game lines using approved game line paint primer and game line paint in strict accordance with the game line paint manufacturer's instructions.
F. Install appropriate threshold plates or transition strips where necessary.

2.0 *CLEANING*

A. Remove all unused materials, tools, and equipment and dispose of any debris properly. Clean the indoor resilient athletic surfacing in accordance with the manufacturer's instructions.

3.6 *PROTECTION*

A. If required, protect the indoor resilient athletic surfacing from damage using coverings approved by the manufacturer until acceptance of work by the customer or their authorized representative.

3.7 *RELATED STANDARDS AND GUIDELINES*

A. ASTM F2170 "Standard Test Method for Determining Relative Humidity In Concrete Floor Slabs Using In-Situ Probes"
B. ASTM F710 "Standard Practice for Preparing Concrete Floors to Receive Resilient Flooring"
C. ACI 302.2R-06 "Guideline for Concrete Slabs that Receive Moisture-Sensitive Flooring Materials"
D. ASTM F2772-11 "Standard Specification for Athletic Performance Properties of Indoor Sports Floor Systems"

END OF SECTION

SECTION 09 65 66
ARCHITECTURAL SPECIFICATIONS FOR INDOOR RESILIENT ATHLETIC SURFACING

PART 1 – GENERAL

1.1 *SECTION INCLUDES*

A. Supply and installation of the indoor resilient multipurpose surfacing
B. Application of the game lines
C. References for the correct construction and preparation of concrete slabs to receive resilient flooring.

1.2 *SUBMITTALS*

A. Product Data:
   1. Manufacturer's promotional brochures, specifications and installation instructions
B. Manufacturer Certifications:
   1. Provide certification that accurately identifies the Original Equipment Manufacturer (OEM) of flooring furnished for this project including manufacturer's name, address and factory location.
   2. Suppliers of private label flooring for this project must identify themselves as such and fully disclose the OEM information listed above.
   3. All "manufacturer" requirements in these specifications must be complied with by the OEM, including warranties, certifications, qualifications, product data, test results, environmental requirements, performance data, etc.
C. Samples:
   1. Submit for selection and approval three (3) sets of the indoor resilient multipurpose surfacing, manufacturer's brochures, samples or sample boards of all of the available colors, textures and styles.
   2. Submit color samples of all the available game line paint colors for selection and approval.
D. Closeout Submittals:
   1. Submit three (3) copies of the indoor resilient multipurpose surfacing and manufacturer's maintenance instructions.
   2. Submit three (3) copies of the material and installation warranties as specified.

1.3 *QUALITY ASSURANCE*

A. Qualifications:
   1. The indoor resilient multipurpose surfacing shall have been actively marketed for a minimum of ten (10) years.
   2. The indoor resilient multipurpose surfacing shall be manufactured in an ISO 9001 certified plant.
   3. The indoor resilient multipurpose surfacing shall be manufactured in an ISO 14001 certified plant.
   4. The indoor resilient multipurpose surfacing supplier shall be an established firm, experienced in the field, and competent in the techniques required by the manufacturer.
   5. The installer of the indoor resilient multipurpose surfacing shall have a minimum of five (5) years of experience in the field installing indoor resilient multipurpose surfacing and have worked on at least five (5) projects of similar size, type and complexity.

B. Certifications:
   1. Installer to submit the indoor resilient athletic surfacing manufacturer's certification attesting that they are a trained installer of the indoor resilient multipurpose surfacing.
   2. The indoor resilient multipurpose surfacing manufacturer to submit official ISO 9001 certification for the facility in which the indoor resilient multipurpose surfacing is manufactured.

C. Testing:
   1. Tests shall be relative for multi-purpose use with certificates from independent testing resources to be made available upon request.
   2. Test results shall be no more than 5 years old and performed according to ASTM standard testing procedures.

1.4 *DELIVERY, STORAGE AND HANDLING*

A. Delivery:
   Material shall not be delivered until all related work is in place and finished and/or proper storage facilities and conditions can be provided and guaranteed stable according to FieldTurf USA, Inc. recommendations.

B. Storage:
   1. Store the material in a secure, clean and dry location.
   2. Maintain temperature between 55° and 85° Fahrenheit.
   3. Store the indoor resilient athletic surfacing rolls in an upright position on a smooth flat surface immediately upon delivery to jobsite.
   4. Rolls shipped in rigid protective cardboard containers can be laid horizontally prior to unpacking and installation.

1.5 *PROJECT/SITE CONDITIONS*

A. It is the responsibility of the general contractor/construction manager to maintain project/site conditions acceptable for the installation of the indoor resilient multipurpose flooring.

B. The area in which the indoor resilient multipurpose surfacing will be installed shall be dry and weather tight. Permanent heat, light and ventilation shall be installed and operable.

C. All other trades shall have completed their work prior to the installation of the resilient athletic flooring. The general contractor or construction manager shall maintain a secure and clean working environment before, during and after the installation.

D. Maintain a stable room temperature of at least 65°F for a minimum of one (1) week prior to, during and thereafter installation.

E. An effective low-permeance vapor barrier is placed directly beneath the concrete subfloor. For "on" or "below grade" installations, it is recommended to provide a permanent vapor barrier resistant to long term hydrostatic pressure/moisture exposure. Protrusions should be sealed to prevent moisture migration into the slab. Moisture should not be allowed to enter the slab after the completed construction.

F. Concrete subfloor surface pH level within the 7 to 11 range dependent upon installation type.

G. Concrete subfloor should be no greater than 1/8" within a 10 ft diameter. This tolerance can be measured in accordance with ASTM E1155. A specified (F_F) of 50 and an (F_L) of 30 should reach this degree of floor flatness and floor level. There is no numerical correlation between F numbers and the deviation from the straight

edge. However, the above specified numbers should achieve a flat floor with minimal deviation in the slab. Reference ACI 117 and ACI 302.1R. The general contractor should provide a certificate of compliance with the above recommendations.

H. Concrete subfloor must be clean and free of all foreign materials or objects including, but not limited to, curing compounds and sealers.

I. Fill cracks, grooves, voids, depressions, and other minor imperfections. Follow the manufacturer's directions. Moveable joints must be treated utilizing specific transitioning joint devices depending upon the architect's recommendations. Follow current ASTM F710 guidelines for the preparation of concrete slabs to receive resilient flooring.

J. Refer to ACI 302.2R "Guidelines for Concrete Slabs that Receive Moisture-Sensitive Flooring Materials" for concrete design and construction.

K. Concrete slab shall be fortified with continual steel reinforcement. Fiber reinforcement alone shall not be considered adequate fortification.

1.6 *WARRANTY*

A. Special Limited Warranty:
   1. Manufacturer's standard form in which manufacturer agrees to repair or replace sports flooring including labor that fails within specified warranty period.

B. Material warranty must be direct from the product manufacturer.
   1. Material warranties from separate or third party insurance providers are not valid.
   2. Material warranties must come from original manufacturer or division thereof. Private label warranties from distributors or brokers are not valid. Supply original point of manufacturing upon request.

C. Failures include, but are not limited to, the following:
   1. Material manufacturing defects.
   2. Surface wear and deterioration to the point of wear-through of wear layer per ASTM F410/ASTM F1303.
   3. Failure due to substrate moisture exposure exceeding 80 percent relative humidity when tested according to ASTM F2170.

D. Warranty Period:
   1. <u>For material defects and surface wear-through:</u> **15** years from date of substantial completion.
   2. <u>For moisture vapor tolerance:</u> **10** years from date of substantial completion.

E. Installer's Limited Warranty:
   1. Installer's standard form in which installer agrees to repair or replace sports flooring that fails due to poor workmanship or faulty installation within the specified warranty period.
   2. Warranty Period: 2 years from date of substantial completion.

1.7 *ADDITIONAL MATERIALS*

A. Furnish to the owner additional materials containing a total of at least 1% of each different color or design of the indoor resilient athletic surfacing used on the project.

1.8 *LEED™ CERTIFICATION*

A. The indoor resilient athletic surfacing should be able to help this facility to achieve points towards *LEED™ certification.* Flooring system must be certified by FloorScore.
B. LEED categories positively affected by the indoor resilient athletic surfacing:

LEED™ V4 Credit		Contribution
Materials & Resources: Building Product Disclosure & Optimization (BPDO)		
MRc3: Sourcing of Raw Materials	Options 1 & 2	2 Points
MRc4: Material Ingredients	Option 1	1 Point
MRc5: Construction and Demolition Management	Reclamation and Recycling	ReStart® Program
Indoor Environmental Quality		
EQc2: Low-Emitting Materials	TVOC: 0.5 mg/m3 or less	FloorScore®

PART 2 - PRODUCTS

2.1 *MANUFACTURERS*

A. The basis of the design for the indoor resilient multipurpose surfacing is Omnisports 2.0 mm and Lumaflex Fit system as manufactured by Tarkett.
B. All other installation accessories and related components must be either made or approved by the indoor resilient athletic surfacing manufacturer.
C. Other products may be approved as equal if deemed qualified and submitted in accordance with the General Conditions.
D. Test reports confirming compliance from an independent sports laboratory must be provided along with samples, technical data, installation, maintenance, and warranty prior to acceptance as an alternative product.

2.2 *MATERIALS*

A. Omnisports 2.0 mm - Prefabricated sport surface 2.0 mm (0.08″) with wood flooring design and slightly textured embossed surface as supplied by Tarkett.
   1. Embossing of wood design and solid colors must be the same; varying embossing or surface textures will not be allowed.
   2. Printing of wood design shall closely resemble standard wood strip flooring in size, color, board length, and grain appearance.
   3. The wood design shall be protected by a clear layer of pure PVC (Polyvinyl Chloride) and TopClean xp, a factory-applied UV cured urethane treatment.
   4. Intermediate layers shall be fortified with a non-woven fiberglass grid for increased dimensional stability.
   5. The Lumaflex Fit System shall incorporate Lumaflex Fit double tongue and grooved multi-ply engineered panels, force reduction cushion, and appropriate vapor retarder.

B. Physical properties of the indoor resilient athletic surfacing shall conform to the following minimums:

Width	—	6′ 6″ (2 m)
Length	—	85′ (25.9m) approx.
Wear Layer	—	2 mm
Total Thickness	—	2.0 mm
Total Combined Thickness		1 7/8″ (46 mm approx.)
Wear Layer	Type 1– Grade 1	ASTM F1303/F410
Rolling Load	PASSED	0.30 (EN 1569 {11/1999})
Force Reduction	PASSED	ASTM F2772 Class 5
Surface Finish Effect	PASSED	ASTM F2772 (80 – 110)
Vertical Deformation	PASSED	ASTM F2772
Ball Rebound	PASSED	ASTM F2772 > 90%
Chemical Resistance	Excellent	ASTM F925
Impact Resistance	PASSED	EN 1717
Abrasion Resistance	PASSED	0.10 (EN ISO 5470-1 {06/1999})
Static Load Limit	PASSED	ASTM F970- Load 175 Lbs
Phthalate-free technology	—	YES
REACH Compliant	—	YES
Heavy Metals	—	NO
ISO 9001	—	YES
ISO 14001	—	YES

1. Color: As available from the indoor resilient athletic surfacing manufacturer's standard range.
2. Hardwood Design Series: A wood look design as available from the indoor resilient athletic surfacing manufacturer's standard range.
3. Texture: Texture to remain consistent between solid colors and wood design when blending colors.

C. Welding Rod: As supplied by the indoor resilient athletic surfacing manufacturer or supplier.
   1. Color to blend with the indoor resilient athletic surfacing color or design.
   2. All seams shall be welded to create a monolithic and impermeable surface.

D. Adhesive: As approved by the indoor resilient athletic surfacing manufacturer.

E. Game Line Paint and Primer: As approved by the indoor resilient athletic surfacing manufacturer.

PART 3 - EXECUTION

3.1 *EXAMINATION*

A. It is the responsibility of the general contractor/construction manager to ensure that project/site conditions are acceptable for the installation of the indoor resilient athletic flooring.
B. Verify that the area in which the indoor resilient athletic surfacing will be installed is dry and weather tight. Verify that permanent heat, light and ventilation are installed and operable.
C. Verify that all other work that could cause damage, dirt and dust or interrupt the normal pace of the indoor resilient athletic flooring installation is completed or suspended.
D. Verify that there is a stable room temperature of at least 65◦F.
E. Verify that there are no foreign materials or objects on the subfloor and that the subfloor is clean and ready for installation.
F. *Concrete Subfloor: moisture content less than 85% RH when tested per ASTM F2170.*
G. Follow Fieldturf USA, Inc. installation recommendations.
H. Do not average the results of the tests. Report all field test results in writing to the General Contractor, Architect, and End User prior to installation.
I. Verify that the concrete subfloor surface pH level is within the 7 - 11 range.
J. Document the results confirming the slab is within manufacturer's tolerances for slab deviation.

3.2 *PREPARATION OF SURFACES*

A. Sand the entire surface of the concrete slab.
B. Sweep the concrete slab so as to remove all dirt and dust. If a sweeping compound is to be used it must be a sweeping compound that does not contain oil or other items that may inhibit the adhesive bond.
C. Slab must be dust free. In the event that dust impairs adhesive bond, priming the slab prior to application of adhesive may be necessary. Follow installation guidelines.
D. Follow OSHA guidelines.

3.3 *INSTALLATION*

A. The installation area shall be closed to all traffic and activity for a period to be set by the indoor resilient athletic surfacing installer. The indoor resilient athletic surfacing installation shall not begin until the installer is familiar with the existing conditions.
B. All necessary precautions should be taken to minimize noise, smell, dust, the use of hazardous materials and any other items that may inconvenience others.
C. Install the indoor resilient athletic surfacing in strict accordance with the indoor resilient athletic surfacing manufacturer's written instructions.
D. Install the indoor resilient athletic surfacing minimizing cross seams. Provide a seam diagram during the submittal process for approval prior to installation. Vinyl Sheet Flooring Seams: Comply with ASTM F 1516. Rout joints and heat weld to permanently and seamlessly fuse sections together.
E. Paint game lines using approved game line paint primer and game line paint in strict accordance with the game line paint manufacturer's instructions.
F. Install appropriate threshold plates or transition strips where necessary.

2.0 *CLEANING*

A. Remove all unused materials, tools, and equipment and dispose of any debris properly. Clean the indoor resilient athletic surfacing in accordance with the manufacturer's instructions.

3.6 *PROTECTION*

A. If required, protect the indoor resilient athletic surfacing from damage using coverings approved by the manufacturer until acceptance of work by the customer or their authorized representative.

3.7 *RELATED STANDARDS AND GUIDELINES*

A. ASTM F2170 "Standard Test Method for Determining Relative Humidity In Concrete Floor Slabs Using In-Situ Probes"
B. ASTM F710 "Standard Practice for Preparing Concrete Floors to Receive Resilient Flooring"
C. ACI 302.2R-06 "Guideline for Concrete Slabs that Receive Moisture-Sensitive Flooring Materials"
D. ASTM F2772-11 "Standard Specification for Athletic Performance Properties of Indoor Sports Floor Systems"

END OF SECTION

SECTION 09 65 66
ARCHITECTURAL SPECIFICATIONS FOR INDOOR RESILIENT ATHLETIC SURFACING

PART 1 – GENERAL

1.1 *SECTION INCLUDES*

A. Supply and installation of the indoor resilient multipurpose surfacing
B. Application of the game lines
C. References for the correct construction and preparation of concrete slabs to receive resilient flooring.

1.2 *SUBMITTALS*

A. Product Data:
   1. Manufacturer's promotional brochures, specifications and installation instructions
B. Manufacturer Certifications:
   1. Provide certification that accurately identifies the Original Equipment Manufacturer (OEM) of flooring furnished for this project including manufacturer's name, address and factory location.
   2. Suppliers of private label flooring for this project must identify themselves as such and fully disclose the OEM information listed above.
   3. All "manufacturer" requirements in these specifications must be complied with by the OEM, including warranties, certifications, qualifications, product data, test results, environmental requirements, performance data, etc.
C. Samples:
   1. Submit for selection and approval three (3) sets of the indoor resilient multipurpose surfacing, manufacturer's brochures, samples or sample boards of all of the available colors, textures and styles.
   2. Submit color samples of all the available game line paint colors for selection and approval.
D. Closeout Submittals:
   1. Submit three (3) copies of the indoor resilient multipurpose surfacing and manufacturer's maintenance instructions.
   2. Submit three (3) copies of the material and installation warranties as specified.

1.3 *QUALITY ASSURANCE*

A. Qualifications:
   1. The indoor resilient multipurpose surfacing shall have been actively marketed for a minimum of ten (10) years.
   2. The indoor resilient multipurpose surfacing shall be manufactured in an ISO 9001 certified plant.
   3. The indoor resilient multipurpose surfacing shall be manufactured in an ISO 14001 certified plant.
   4. The indoor resilient multipurpose surfacing supplier shall be an established firm, experienced in the field, and competent in the techniques required by the manufacturer.
   5. The installer of the indoor resilient multipurpose surfacing shall have a minimum of five (5) years of experience in the field installing indoor resilient multipurpose surfacing and have worked on at least five (5) projects of similar size, type and complexity.

B. Certifications:
   1. Installer to submit the indoor resilient athletic surfacing manufacturer's certification attesting that they are a trained installer of the indoor resilient multipurpose surfacing.
   2. The indoor resilient multipurpose surfacing manufacturer to submit official ISO 9001 certification for the facility in which the indoor resilient multipurpose surfacing is manufactured.

C. Testing:
   1. Tests shall be relative for multi-purpose use with certificates from independent testing resources to be made available upon request.
   2. Test results shall be no more than 5 years old and performed according to ASTM standard testing procedures.

1.4 *DELIVERY, STORAGE AND HANDLING*

A. Delivery:
   Material shall not be delivered until all related work is in place and finished and/or proper storage facilities and conditions can be provided and guaranteed stable according to FieldTurf USA, Inc. recommendations.

B. Storage:
   1. Store the material in a secure, clean and dry location.
   2. Maintain temperature between 55° and 85° Fahrenheit.
   3. Store the indoor resilient athletic surfacing rolls in an upright position on a smooth flat surface immediately upon delivery to jobsite.
   4. Rolls shipped in rigid protective cardboard containers can be laid horizontally prior to unpacking and installation.

1.5 *PROJECT/SITE CONDITIONS*

A. It is the responsibility of the general contractor/construction manager to maintain project/site conditions acceptable for the installation of the indoor resilient multipurpose flooring.

B. The area in which the indoor resilient multipurpose surfacing will be installed shall be dry and weather tight. Permanent heat, light and ventilation shall be installed and operable.

C. All other trades shall have completed their work prior to the installation of the resilient athletic flooring. The general contractor or construction manager shall maintain a secure and clean working environment before, during and after the installation.

D. Maintain a stable room temperature of at least 65°F for a minimum of one (1) week prior to, during and thereafter installation.

E. An effective low-permeance vapor barrier is placed directly beneath the concrete subfloor. For "on" or "below grade" installations, it is recommended to provide a permanent vapor barrier resistant to long term hydrostatic pressure/moisture exposure. Protrusions should be sealed to prevent moisture migration into the slab. Moisture should not be allowed to enter the slab after the completed construction.

F. Concrete subfloor surface pH level within the 7 to 11 range dependent upon installation type.

G. Concrete subfloor should be no greater than 1/8" within a 10 ft diameter. This tolerance can be measured in accordance with ASTM E1155. A specified (F_F) of 50 and an (F_L) of 30 should reach this degree of floor flatness and floor level. There is no numerical correlation between F numbers and the deviation from the straight

edge. However, the above specified numbers should achieve a flat floor with minimal deviation in the slab. Reference ACI 117 and ACI 302.1R. The general contractor should provide a certificate of compliance with the above recommendations.

H. Concrete subfloor must be clean and free of all foreign materials or objects including, but not limited to, curing compounds and sealers.

I. Fill cracks, grooves, voids, depressions, and other minor imperfections. Follow the manufacturer's directions. Moveable joints must be treated utilizing specific transitioning joint devices depending upon the architect's recommendations. Follow current ASTM F710 guidelines for the preparation of concrete slabs to receive resilient flooring.

J. Refer to ACI 302.2R "Guidelines for Concrete Slabs that Receive Moisture-Sensitive Flooring Materials" for concrete design and construction.

K. Concrete slab shall be fortified with continual steel reinforcement. Fiber reinforcement alone shall not be considered adequate fortification.

1.6 *WARRANTY*

A. Special Limited Warranty:
   1. Manufacturer's standard form in which manufacturer agrees to repair or replace sports flooring including labor that fails within specified warranty period.

B. Material warranty must be direct from the product manufacturer.
   1. Material warranties from separate or third party insurance providers are not valid.
   2. Material warranties must come from original manufacturer or division thereof. Private label warranties from distributors or brokers are not valid. Supply original point of manufacturing upon request.

C. Failures include, but are not limited to, the following:
   1. Material manufacturing defects.
   2. Surface wear and deterioration to the point of wear-through of wear layer per ASTM F410/ASTM F1303.
   3. Failure due to substrate moisture exposure exceeding 80 percent relative humidity when tested according to ASTM F2170.

D. Warranty Period:
   1. <u>For material defects and surface wear-through:</u> **15** years from date of substantial completion.
   2. <u>For moisture vapor tolerance:</u> **10** years from date of substantial completion.

E. Installer's Limited Warranty:
   1. Installer's standard form in which installer agrees to repair or replace sports flooring that fails due to poor workmanship or faulty installation within the specified warranty period.
   2. Warranty Period: 2 years from date of substantial completion.

1.7 *ADDITIONAL MATERIALS*

A. Furnish to the owner additional materials containing a total of at least 1% of each different color or design of the indoor resilient athletic surfacing used on the project.

1.8 *LEED™ CERTIFICATION*

A. The indoor resilient athletic surfacing should be able to help this facility to achieve points towards *LEED™ certification.* Flooring system must be certified by FloorScore.
B. LEED categories positively affected by the indoor resilient athletic surfacing:

LEED™ V4 Credit		Contribution
Materials & Resources: Building Product Disclosure & Optimization (BPDO)		
MRc3: Sourcing of Raw Materials	Options 1 & 2	2 Points
MRc4: Material Ingredients	Option 1	1 Point
MRc5: Construction and Demolition Management	Reclamation and Recycling	ReStart® Program
Indoor Environmental Quality		
EQc2: Low-Emitting Materials	TVOC: 0.5 mg/m3 or less	FloorScore®

PART 2 - PRODUCTS

2.1 *MANUFACTURERS*

A. The basis of the design for the indoor resilient multipurpose surfacing is Omnisports 2.0 mm and Lumaflex system as manufactured by Tarkett.
B. All other installation accessories and related components must be either made or approved by the indoor resilient athletic surfacing manufacturer.
C. Other products may be approved as equal if deemed qualified and submitted in accordance with the General Conditions.
D. Test reports confirming compliance from an independent sports laboratory must be provided along with samples, technical data, installation, maintenance, and warranty prior to acceptance as an alternative product.

2.2 *MATERIALS*

A. Omnisports 2.0 mm - Prefabricated sport surface 2.0 mm (0.08″) with wood flooring design and slightly textured embossed surface as supplied by Tarkett.
   1. Embossing of wood design and solid colors must be the same; varying embossing or surface textures will not be allowed.
   2. Printing of wood design shall closely resemble standard wood strip flooring in size, color, board length, and grain appearance.
   3. The wood design shall be protected by a clear layer of pure PVC (Polyvinyl Chloride) and TopClean xp, a factory-applied UV cured urethane treatment.
   4. Intermediate layers shall be fortified with a non-woven fiberglass grid for increased dimensional stability.
   5. The Lumaflex System shall incorporate Lumaflex double tongue and grooved multi-ply engineered panels, force reduction cushion, and appropriate vapor retarder.

B. Physical properties of the indoor resilient athletic surfacing shall conform to the following minimums:

Width	—	6′ 6″ (2 m)
Length	—	85′ (25.9m) approx.
Wear Layer	—	2 mm
Total Thickness	—	2.0 mm
Total Combined Thickness		1 ¼″ (33 mm approx.)
Wear Layer	Type 1– Grade 1	ASTM F1303/F410
Rolling Load	PASSED	0.30 (EN 1569 {11/1999})
Force Reduction	PASSED	ASTM F2772 Class 4
Surface Finish Effect	PASSED	ASTM F2772 (80 – 110)
Vertical Deformation	PASSED	ASTM F2772
Ball Rebound	PASSED	ASTM F2772 > 90%
Chemical Resistance	Excellent	ASTM F925
Impact Resistance	PASSED	EN 1717
Abrasion Resistance	PASSED	0.10 (EN ISO 5470-1 {06/1999})
Static Load Limit	PASSED	ASTM F970- Load 175 Lbs
Fire Rating	PASSED	ASTM E648 Class 1
Phthalate-free technology	—	YES
Lumaflex Foam		GreenGuard Certified
REACH Compliant	—	YES
Heavy Metals	—	NO
ISO 9001	—	YES
ISO 14001	—	YES

1. Color: As available from the indoor resilient athletic surfacing manufacturer's standard range.
2. Hardwood Design Series: A wood look design as available from the indoor resilient athletic surfacing manufacturer's standard range.
3. Texture: Texture to remain consistent between solid colors and wood design when blending colors.

C. Welding Rod: As supplied by the indoor resilient athletic surfacing manufacturer or supplier.
   1. Color to blend with the indoor resilient athletic surfacing color or design.
   2. All seams shall be welded to create a monolithic and impermeable surface.

D. Adhesive: As approved by the indoor resilient athletic surfacing manufacturer.

E. Game Line Paint and Primer: As approved by the indoor resilient athletic surfacing manufacturer.

PART 3 - EXECUTION

3.1 *EXAMINATION*

A. It is the responsibility of the general contractor/construction manager to ensure that project/site conditions are acceptable for the installation of the indoor resilient athletic flooring.
B. Verify that the area in which the indoor resilient athletic surfacing will be installed is dry and weather tight. Verify that permanent heat, light and ventilation are installed and operable.
C. Verify that all other work that could cause damage, dirt and dust or interrupt the normal pace of the indoor resilient athletic flooring installation is completed or suspended.
D. Verify that there is a stable room temperature of at least 65◦F.
E. Verify that there are no foreign materials or objects on the subfloor and that the subfloor is clean and ready for installation.
F. *Concrete Subfloor: moisture content less than 85% RH when tested per ASTM F2170.*
G. Follow Fieldturf USA, Inc. installation recommendations.
H. Do not average the results of the tests. Report all field test results in writing to the General Contractor, Architect, and End User prior to installation.
I. Verify that the concrete subfloor surface pH level is within the 7 - 11 range.
J. Document the results confirming the slab is within manufacturer's tolerances for slab deviation.

3.2 *PREPARATION OF SURFACES*

A. Sand the entire surface of the concrete slab.
B. Sweep the concrete slab so as to remove all dirt and dust. If a sweeping compound is to be used it must be a sweeping compound that does not contain oil or other items that may inhibit the adhesive bond.
C. Slab must be dust free. In the event that dust impairs adhesive bond, priming the slab prior to application of adhesive may be necessary. Follow installation guidelines.
D. Follow OSHA guidelines.

3.3 *INSTALLATION*

A. The installation area shall be closed to all traffic and activity for a period to be set by the indoor resilient athletic surfacing installer. The indoor resilient athletic surfacing installation shall not begin until the installer is familiar with the existing conditions.
B. All necessary precautions should be taken to minimize noise, smell, dust, the use of hazardous materials and any other items that may inconvenience others.
C. Install the indoor resilient athletic surfacing in strict accordance with the indoor resilient athletic surfacing manufacturer's written instructions.
D. Install the indoor resilient athletic surfacing minimizing cross seams. Provide a seam diagram during the submittal process for approval prior to installation. Vinyl Sheet Flooring Seams: Comply with ASTM F 1516. Rout joints and heat weld to permanently and seamlessly fuse sections together.
E. Paint game lines using approved game line paint primer and game line paint in strict accordance with the game line paint manufacturer's instructions.
F. Install appropriate threshold plates or transition strips where necessary.

2.0 *CLEANING*

A. Remove all unused materials, tools, and equipment and dispose of any debris properly. Clean the indoor resilient athletic surfacing in accordance with the manufacturer's instructions.

3.6 *PROTECTION*

A. If required, protect the indoor resilient athletic surfacing from damage using coverings approved by the manufacturer until acceptance of work by the customer or their authorized representative.

3.7 *RELATED STANDARDS AND GUIDELINES*

A. ASTM F2170 "Standard Test Method for Determining Relative Humidity In Concrete Floor Slabs Using In-Situ Probes"
B. ASTM F710 "Standard Practice for Preparing Concrete Floors to Receive Resilient Flooring"
C. ACI 302.2R-06 "Guideline for Concrete Slabs that Receive Moisture-Sensitive Flooring Materials"
D. ASTM F2772-11 "Standard Specification for Athletic Performance Properties of Indoor Sports Floor Systems"

END OF SECTION

SECTION 09 65 66
ARCHITECTURAL SPECIFICATIONS FOR INDOOR RESILIENT ATHLETIC SURFACING

PART 1 – GENERAL

1.1 *SECTION INCLUDES*

A. Supply and installation of the indoor resilient multipurpose surfacing
B. Application of the game lines
C. References for the correct construction and preparation of concrete slabs to receive resilient flooring.

1.2 *SUBMITTALS*

A. Product Data:
   1. Manufacturer's promotional brochures, specifications and installation instructions
B. Manufacturer Certifications:
   1. Provide certification that accurately identifies the Original Equipment Manufacturer (OEM) of flooring furnished for this project including manufacturer's name, address and factory location.
   2. Suppliers of private label flooring for this project must identify themselves as such and fully disclose the OEM information listed above.
   3. All "manufacturer" requirements in these specifications must be complied with by the OEM, including warranties, certifications, qualifications, product data, test results, environmental requirements, performance data, etc.
C. Samples:
   1. Submit for selection and approval three (3) sets of the indoor resilient multipurpose surfacing, manufacturer's brochures, samples or sample boards of all of the available colors, textures and styles.
   2. Submit color samples of all the available game line paint colors for selection and approval.
D. Closeout Submittals:
   1. Submit three (3) copies of the indoor resilient multipurpose surfacing and manufacturer's maintenance instructions.
   2. Submit three (3) copies of the material and installation warranties as specified.

1.3 *QUALITY ASSURANCE*

A. Qualifications:
   1. The indoor resilient multipurpose surfacing shall have been actively marketed for a minimum of ten (10) years.
   2. The indoor resilient multipurpose surfacing shall be manufactured in an ISO 9001 certified plant.
   3. The indoor resilient multipurpose surfacing shall be manufactured in an ISO 14001 certified plant.
   4. The indoor resilient multipurpose surfacing supplier shall be an established firm, experienced in the field, and competent in the techniques required by the manufacturer.
   5. The installer of the indoor resilient multipurpose surfacing shall have a minimum of five (5) years of experience in the field installing indoor resilient multipurpose surfacing and have worked on at least five (5) projects of similar size, type and complexity.

B. Certifications:
   1. Installer to submit the indoor resilient athletic surfacing manufacturer's or distributor's certification attesting that they are an approved installer of the indoor resilient multipurpose surfacing.
   2. The ind**o**or resilient multipurpose surfacing manufacturer to submit official ISO 9001 certification for the facility in which the indoor resilient multipurpose surfacing is manufactured.

C. Testing:
   Tests shall be relative for multi-purpose use with certificates from independent testing resources to be made available upon request. Test results shall be performed according to ASTM standard testing procedures including ASTM F2772 "Standard Specification for Athletic Performance Properties of Indoor Sports Floor Systems".

1.4 *DELIVERY, STORAGE AND HANDLING*

A. Delivery:
   Material shall not be delivered until all related work is in place and finished and/or proper storage facilities and conditions can be provided and guaranteed stable according to FieldTurf USA, Inc. recommendations.

B. Storage:
   1. Store the material in a secure, clean and dry location.
   2. Maintain temperature between 55° and 85° Fahrenheit.
   3. Store the indoor resilient athletic surfacing rolls in an upright position on a smooth flat surface immediately upon delivery to jobsite.
   4. Rolls shipped in rigid protective cardboard containers can be laid horizontally prior to unpacking and installation.

1.5 *PROJECT/SITE CONDITIONS*

A. It is the responsibility of the general contractor/construction manager to maintain project/site conditions acceptable for the installation of the indoor resilient multipurpose flooring.

B. The area in which the indoor resilient multipurpose surfacing will be installed shall be dry and weather tight. Permanent heat, light and ventilation shall be installed and operable.

C. All other trades shall have completed their work prior to the installation of the resilient athletic flooring. The general contractor or construction manager shall maintain a secure and clean working environment before, during and after the installation.

D. Maintain a stable room temperature of at least 65°F for a minimum of one (1) week prior to, during and thereafter installation.

E. An effective low-permeance vapor barrier is placed directly beneath the concrete subfloor. For "on" or "below grade" installations, it is recommended to provide a permanent vapor barrier resistant to long term hydrostatic pressure/moisture exposure. Protrusions should be sealed to prevent moisture migration into the slab. Moisture should not be allowed to enter the slab after the completed construction.

F. Concrete subfloor surface pH level within the 7 to 11 range dependent upon installation type.

G. Concrete subfloor should be no greater than 1/8" within a 10 ft diameter. This tolerance can be measured in accordance with ASTM E1155. A specified (F_F) of 50 and an (F_L) of 30 should reach this degree of floor flatness and floor level. There is no numerical correlation between F numbers and the deviation from the straight

edge. However, the above specified numbers should achieve a flat floor with minimal deviation in the slab. Reference ACI 117 and ACI 302.1R. The general contractor should provide a certificate of compliance with the above recommendations.

H. Concrete subfloor must be clean and free of all foreign materials or objects including, but not limited to, curing compounds and sealers.

I. Fill cracks, grooves, voids, depressions, and other minor imperfections. Follow the manufacturer's directions. Moveable joints must be treated utilizing specific transitioning joint devices depending upon the architect's recommendations. Follow current ASTM F710 guidelines for the preparation of concrete slabs to receive resilient flooring.

J. Refer to ACI 302.2R "Guidelines for Concrete Slabs that Receive Moisture-Sensitive Flooring Materials" for concrete design and construction.

K. Concrete slab shall be fortified with continual steel reinforcement. Fiber reinforcement alone shall not be considered adequate fortification.

1.6 *WARRANTY*

A. Special Limited Warranty:
   1. Manufacturer's standard form in which manufacturer agrees to repair or replace sports flooring including labor that fails within specified warranty period.

B. Material warranty must be direct from the product manufacturer.
   1. Material warranties must come from original manufacturer or division thereof. Private label warranties from distributors or brokers are not valid. Supply original point of manufacturing upon request.

C. Failures include, but are not limited to, the following:
   1. Material manufacturing defects.
   2. Surface wear and deterioration to the point of wear-through of wear layer per ASTM F410/ASTM F1303.
   3. Failure due to substrate moisture exposure exceeding 98 percent relative humidity when tested according to ASTM F2170.

D. Warranty Period:
   1. For material defects and surface wear-through: **25** years from date of substantial completion.
   2. For moisture vapor tolerance: **25** years from date of substantial completion.

E. Installer's Limited Warranty:
   1. Installer's standard form in which installer agrees to repair or replace sports flooring that fails due to poor workmanship or faulty installation within the specified warranty period.
   2. Warranty Period: 2 years from date of substantial completion.

1.7 *ADDITIONAL MATERIALS*

A. Furnish to the owner additional materials containing a total of at least 1% of each different color or design of the indoor resilient athletic surfacing used on the project.

1.8 *LEED™ CERTIFICATION*

A. The indoor resilient athletic surfacing should be able to help this facility to achieve points towards *LEED™ certification.* Flooring system must be certified by FloorScore.
B. LEED categories positively affected by the indoor resilient athletic surfacing:

LEED™ V4 Credit		Contribution
Materials & Resources: Building Product Disclosure & Optimization (BPDO)		
MRc3: Sourcing of Raw Materials	Options 1 & 2	2 Points
MRc4: Material Ingredients	Option 1	1 Point
MRc5: Construction and Demolition Management	Reclamation and Recycling	ReStart® Program
Indoor Environmental Quality		
EQc2: Low-Emitting Materials	TVOC: 0.5 mg/m3 or less	FloorScore®

PART 2 - PRODUCTS

2.1 *MANUFACTURERS*

A. The basis of the design for the indoor resilient multipurpose surfacing is Omnisports Extreme as manufactured by Tarkett.
B. All other installation accessories and related components must be either made or approved by the indoor resilient athletic surfacing manufacturer.
C. Other products may be approved as equal if deemed qualified and submitted in accordance with the General Conditions.
D. Test reports confirming compliance from an independent sports laboratory must be provided along with samples, technical data, installation, maintenance, and warranty prior to acceptance as an alternative product.

2.2 *MATERIALS*

A. Omnisports Extreme - Prefabricated sport surface 12 mm (0.47”) with wood flooring design and slightly textured embossed surface as supplied by Tarkett.
   1. Embossing of wood design and solid colors must be the same; varying embossing or surface textures will not be allowed.
   2. Printing of wood design shall closely resemble standard wood strip flooring in size, color, board length, and grain appearance.
   3. The wood design shall be protected by a clear layer of pure PVC (Polyvinyl Chloride) and TopClean xp, a factory-applied UV cured urethane treatment.
   4. Intermediate layers shall be fortified with a non-woven fiberglass grid for increased dimensional stability.
   5. The foam force reduction layer shall be high-density closed cell PVC foam with honeycomb embossing, and is applied in one continuous manufacturing process.
   6. Laminated or adhered foam layers will not be allowed.
   7. Field constructed products will not be accepted.

A. Physical properties of the indoor resilient athletic surfacing shall conform to the following minimums:

Width	—	6’ 6” (2 m)
Length	—	49.2' (15m) approx.
Wear Layer	—	2 mm
Total Thickness	—	12 mm
Wear Layer	Type 1– Grade 1	ASTM F1303/F410
Vertical Deformation	PASSED	ASTM F2772
Rolling Load	PASSED	0.30 (EN 1569 {11/1999})
Surface Finish Effect	PASSED	ASTM F2772 (80 – 110)
Chemical Resistance	Excellent	ASTM F925
Impact Resistance	PASSED	EN 1717
Abrasion Resistance	PASSED	0.10 (EN ISO 5470-1 {06/1999})
Static Load Limit	PASSED	ASTM F970- Load 175 Lbs
Sound Insulation	Excellent	+/= 21 dB (ISO 717/2)
In-Room Sound Insulation	Excellent	61dB (NF S31-074)
Ball Rebound	PASSED	ASTM F2772 > 90%
Force Reduction	PASSED	ASTM F2772 Class 4
Fire Rating	PASSED	ASTM E648 Class 1
Microbial Assays Test	No Growth	G21 ASTM - Backing
Phthalate-free technology	—	YES
REACH Compliant	—	YES
Heavy Metals	—	NO
ISO 9001	—	YES
ISO 14001	—	YES

1. Color: As available from the indoor resilient athletic surfacing manufacturer’s standard range.
2. Hardwood Design Series: High definition printing for a realistic wood surface appearance as available from the indoor resilient athletic surfacing manufacturer’s standard range.
3. Texture: Texture to remain consistent between solid colors and wood design when blending colors.

C. Welding Rod: As supplied by the indoor resilient athletic surfacing manufacturer or supplier.
   1. Color to blend with the indoor resilient athletic surfacing color or design.
   2. All seams shall be welded to create a monolithic and impermeable surface.

D. Adhesive: As approved by the indoor resilient athletic surfacing manufacturer.

E. Game Line Paint and Primer: As approved by the indoor resilient athletic surfacing manufacturer.

PART 3 - EXECUTION

3.1 *EXAMINATION*

A. It is the responsibility of the general contractor/construction manager to ensure that project/site conditions are acceptable for the installation of the indoor resilient athletic flooring.
B. Verify that the area in which the indoor resilient athletic surfacing will be installed is dry and weather tight. Verify that permanent heat, light and ventilation are installed and operable.
C. Verify that all other work that could cause damage, dirt and dust or interrupt the normal pace of the indoor resilient athletic flooring installation is completed or suspended.
D. Verify that there is a stable room temperature of at least 65◦F.
E. Verify that there are no foreign materials or objects on the subfloor and that the subfloor is clean and ready for installation.
F. *Direct Full Spread Adhering to Concrete Subfloor HS Sports Spray : moisture content less than 90% RH when tested per ASTM F2170.*
G. Follow Fieldturf USA, Inc. installation recommendations.
H. Do not average the results of the tests. Report all field test results in writing to the General Contractor, Architect, and End User prior to installation.
I. Verify that the concrete subfloor surface pH level is within the 7 - 11 range.
J. Document the results confirming the slab is within manufacturer's tolerances for slab deviation.

3.2 *PREPARATION OF SURFACES*

A. Sand the entire surface of the concrete slab.
B. Sweep the concrete slab so as to remove all dirt and dust. If a sweeping compound is to be used it must be a sweeping compound that does not contain oil or other items that may inhibit the adhesive bond.
C. Slab must be dust free. In the event that dust impairs adhesive bond, priming the slab prior to application of adhesive may be necessary. Follow installation guidelines.
D. Follow OSHA guidelines.

3.3 *INSTALLATION*

A. The installation area shall be closed to all traffic and activity for a period to be set by the indoor resilient athletic surfacing installer. The indoor resilient athletic surfacing installation shall not begin until the installer is familiar with the existing conditions.
B. All necessary precautions should be taken to minimize noise, smell, dust, the use of hazardous materials and any other items that may inconvenience others.
C. Install the indoor resilient athletic surfacing in strict accordance with the indoor resilient athletic surfacing manufacturer's written instructions.
D. Install the indoor resilient athletic surfacing minimizing cross seams. Provide a seam diagram during the submittal process for approval prior to installation. Vinyl Sheet Flooring Seams: Comply with ASTM F 1516. Rout joints and heat weld to permanently and seamlessly fuse sections together.
E. Paint game lines using approved game line paint primer and game line paint in strict accordance with the game line paint manufacturer's instructions.
F. Install appropriate threshold plates or transition strips where necessary.

3.5 *CLEANING*

A. Remove all unused materials, tools, and equipment and dispose of any debris properly. Clean the indoor resilient athletic surfacing in accordance with the manufacturer's instructions.

3.6 *PROTECTION*

A. If required, protect the indoor resilient athletic surfacing from damage using coverings approved by the manufacturer until acceptance of work by the customer or their authorized representative.

3.7 *RELATED STANDARDS AND GUIDELINES*

A. ASTM F2170 "Standard Test Method for Determining Relative Humidity In Concrete Floor Slabs Using In-Situ Probes"
B. ASTM F710 "Standard Practice for Preparing Concrete Floors to Receive Resilient Flooring"
C. ACI 302.2R-06 "Guideline for Concrete Slabs that Receive Moisture-Sensitive Flooring Materials"
D. ASTM F2772-11 "Standard Specification for Athletic Performance Properties of Indoor Sports Floor Systems"

END OF SECTION

SECTION 09 65 66
ARCHITECTURAL SPECIFICATIONS FOR INDOOR RESILIENT ATHLETIC SURFACING

PART 1 – GENERAL

1.1 *SECTION INCLUDES*

A. Supply and installation of the indoor resilient multipurpose surfacing
B. Application of the game lines
C. References for the correct construction and preparation of concrete slabs to receive resilient flooring.

1.2 *SUBMITTALS*

A. Product Data:
   1. Manufacturer's promotional brochures, specifications and installation instructions
B. Manufacturer Certifications:
   1. Provide certification that accurately identifies the Original Equipment Manufacturer (OEM) of flooring furnished for this project including manufacturer's name, address and factory location.
   2. Suppliers of private label flooring for this project must identify themselves as such and fully disclose the OEM information listed above.
   3. All "manufacturer" requirements in these specifications must be complied with by the OEM, including warranties, certifications, qualifications, product data, test results, environmental requirements, performance data, etc.
C. Samples:
   1. Submit for selection and approval three (3) sets of the indoor resilient multipurpose surfacing, manufacturer's brochures, samples or sample boards of all of the available colors, textures and styles.
   2. Submit color samples of all the available game line paint colors for selection and approval.
D. Closeout Submittals:
   1. Submit three (3) copies of the indoor resilient multipurpose surfacing and manufacturer's maintenance instructions.
   2. Submit three (3) copies of the material and installation warranties as specified.

1.3 *QUALITY ASSURANCE*

A. Qualifications:
   1. The indoor resilient multipurpose surfacing shall have been actively marketed for a minimum of ten (10) years.
   2. The indoor resilient multipurpose surfacing shall be manufactured in an ISO 9001 certified plant.
   3. The indoor resilient multipurpose surfacing shall be manufactured in an ISO 14001 certified plant.
   4. The indoor resilient multipurpose surfacing supplier shall be an established firm, experienced in the field, and competent in the techniques required by the manufacturer.
   5. The installer of the indoor resilient multipurpose surfacing shall have a minimum of five (5) years of experience in the field installing indoor resilient multipurpose surfacing and have worked on at least five (5) projects of similar size, type and complexity.

B. Certifications:
   1. Installer to submit the indoor resilient athletic surfacing manufacturer's or distributor's certification attesting that they are an approved installer of the indoor resilient multipurpose surfacing.
   2. The ind**o**or resilient multipurpose surfacing manufacturer to submit official ISO 9001 certification for the facility in which the indoor resilient multipurpose surfacing is manufactured.

C. Testing:
   Tests shall be relative for multi-purpose use with certificates from independent testing resources to be made available upon request. Test results shall be performed according to ASTM standard testing procedures including ASTM F2772 "Standard Specification for Athletic Performance Properties of Indoor Sports Floor Systems".

1.4 *DELIVERY, STORAGE AND HANDLING*

A. Delivery:
   Material shall not be delivered until all related work is in place and finished and/or proper storage facilities and conditions can be provided and guaranteed stable according to FieldTurf USA, Inc. recommendations.

B. Storage:
   1. Store the material in a secure, clean and dry location.
   2. Maintain temperature between 55° and 85° Fahrenheit.
   3. Store the indoor resilient athletic surfacing rolls in an upright position on a smooth flat surface immediately upon delivery to jobsite.
   4. Rolls shipped in rigid protective cardboard containers can be laid horizontally prior to unpacking and installation.

1.5 *PROJECT/SITE CONDITIONS*

A. It is the responsibility of the general contractor/construction manager to maintain project/site conditions acceptable for the installation of the indoor resilient multipurpose flooring.

B. The area in which the indoor resilient multipurpose surfacing will be installed shall be dry and weather tight. Permanent heat, light and ventilation shall be installed and operable.

C. All other trades shall have completed their work prior to the installation of the resilient athletic flooring. The general contractor or construction manager shall maintain a secure and clean working environment before, during and after the installation.

D. Maintain a stable room temperature of at least 65°F for a minimum of one (1) week prior to, during and thereafter installation.

E. An effective low-permeance vapor barrier is placed directly beneath the concrete subfloor. For "on" or "below grade" installations, it is recommended to provide a permanent vapor barrier resistant to long term hydrostatic pressure/moisture exposure. Protrusions should be sealed to prevent moisture migration into the slab. Moisture should not be allowed to enter the slab after the completed construction.

F. Concrete subfloor surface pH level within the 7 to 11 range dependent upon installation type.

G. Concrete subfloor should be no greater than 1/8" within a 10 ft diameter. This tolerance can be measured in accordance with ASTM E1155. A specified (F_F) of 50 and an (F_L) of 30 should reach this degree of floor flatness and floor level. There is no numerical correlation between F numbers and the deviation from the straight

edge. However, the above specified numbers should achieve a flat floor with minimal deviation in the slab. Reference ACI 117 and ACI 302.1R. The general contractor should provide a certificate of compliance with the above recommendations.

H. Concrete subfloor must be clean and free of all foreign materials or objects including, but not limited to, curing compounds and sealers.

I. Fill cracks, grooves, voids, depressions, and other minor imperfections. Follow the manufacturer's directions. Moveable joints must be treated utilizing specific transitioning joint devices depending upon the architect's recommendations. Follow current ASTM F710 guidelines for the preparation of concrete slabs to receive resilient flooring.

J. Refer to ACI 302.2R "Guidelines for Concrete Slabs that Receive Moisture-Sensitive Flooring Materials" for concrete design and construction.

K. Concrete slab shall be fortified with continual steel reinforcement. Fiber reinforcement alone shall not be considered adequate fortification.

1.6 *WARRANTY*

A. Special Limited Warranty:
   1. Manufacturer's standard form in which manufacturer agrees to repair or replace sports flooring including labor that fails within specified warranty period.

B. Material warranty must be direct from the product manufacturer.
   1. Material warranties must come from original manufacturer or division thereof. Private label warranties from distributors or brokers are not valid. Supply original point of manufacturing upon request.

C. Failures include, but are not limited to, the following:
   1. Material manufacturing defects.
   2. Surface wear and deterioration to the point of wear-through of wear layer per ASTM F410/ASTM F1303.
   3. Failure due to substrate moisture exposure exceeding 98 percent relative humidity when tested according to ASTM F2170.

D. Warranty Period:
   1. For material defects and surface wear-through: **25** years from date of substantial completion.
   2. For moisture vapor tolerance: **25** years from date of substantial completion.

E. Installer's Limited Warranty:
   1. Installer's standard form in which installer agrees to repair or replace sports flooring that fails due to poor workmanship or faulty installation within the specified warranty period.
   2. Warranty Period: 2 years from date of substantial completion.

1.7 *ADDITIONAL MATERIALS*

A. Furnish to the owner additional materials containing a total of at least 1% of each different color or design of the indoor resilient athletic surfacing used on the project.

1.8 *LEED™ CERTIFICATION*

A. The indoor resilient athletic surfacing should be able to help this facility to achieve points towards *LEED™ certification.* Flooring system must be certified by FloorScore.
B. LEED categories positively affected by the indoor resilient athletic surfacing:

LEED™ V4 Credit		Contribution
Materials & Resources: Building Product Disclosure & Optimization (BPDO)		
MRc3: Sourcing of Raw Materials	Options 1 & 2	2 Points
MRc4: Material Ingredients	Option 1	1 Point
MRc5: Construction and Demolition Management	Reclamation and Recycling	ReStart® Program
Indoor Environmental Quality		
EQc2: Low-Emitting Materials	TVOC: 0.5 mg/m3 or less	FloorScore®

PART 2 - PRODUCTS

2.1 *MANUFACTURERS*

A. The basis of the design for the indoor resilient multipurpose surfacing is Omnisports Extreme as manufactured by Tarkett.
B. All other installation accessories and related components must be either made or approved by the indoor resilient athletic surfacing manufacturer.
C. Other products may be approved as equal if deemed qualified and submitted in accordance with the General Conditions.
D. Test reports confirming compliance from an independent sports laboratory must be provided along with samples, technical data, installation, maintenance, and warranty prior to acceptance as an alternative product.

2.2 *MATERIALS*

A. Omnisports Extreme - Prefabricated sport surface 12 mm (0.47”) with wood flooring design and slightly textured embossed surface as supplied by Tarkett.
   1. Embossing of wood design and solid colors must be the same; varying embossing or surface textures will not be allowed.
   2. Printing of wood design shall closely resemble standard wood strip flooring in size, color, board length, and grain appearance.
   3. The wood design shall be protected by a clear layer of pure PVC (Polyvinyl Chloride) and TopClean xp, a factory-applied UV cured urethane treatment.
   4. Intermediate layers shall be fortified with a non-woven fiberglass grid for increased dimensional stability.
   5. The foam force reduction layer shall be high-density closed cell PVC foam with honeycomb embossing, and is applied in one continuous manufacturing process.
   6. Laminated or adhered foam layers will not be allowed.
   7. Field constructed products will not be accepted.

A. Physical properties of the indoor resilient athletic surfacing shall conform to the following minimums:

Width	—	6’ 6” (2 m)
Length	—	49.2' (15m) approx.
Wear Layer	—	2 mm
Total Thickness	—	12 mm
Wear Layer	Type 1– Grade 1	ASTM F1303/F410
Vertical Deformation	PASSED	ASTM F2772
Rolling Load	PASSED	0.30 (EN 1569 {11/1999})
Surface Finish Effect	PASSED	ASTM F2772 (80 – 110)
Chemical Resistance	Excellent	ASTM F925
Impact Resistance	PASSED	EN 1717
Abrasion Resistance	PASSED	0.10 (EN ISO 5470-1 {06/1999})
Static Load Limit	PASSED	ASTM F970- Load 175 Lbs
Sound Insulation	Excellent	+/= 21 dB (ISO 717/2)
In-Room Sound Insulation	Excellent	61dB (NF S31-074)
Ball Rebound	PASSED	ASTM F2772 > 90%
Force Reduction	PASSED	ASTM F2772 Class 4
Fire Rating	PASSED	ASTM E648 Class 1
Microbial Assays Test	No Growth	G21 ASTM - Backing
Phthalate-free technology	—	YES
REACH Compliant	—	YES
Heavy Metals	—	NO
ISO 9001	—	YES
ISO 14001	—	YES

1. Color: As available from the indoor resilient athletic surfacing manufacturer’s standard range.
2. Hardwood Design Series: High definition printing for a realistic wood surface appearance as available from the indoor resilient athletic surfacing manufacturer’s standard range.
3. Texture: Texture to remain consistent between solid colors and wood design when blending colors.

C. Welding Rod: As supplied by the indoor resilient athletic surfacing manufacturer or supplier.
   1. Color to blend with the indoor resilient athletic surfacing color or design.
   2. All seams shall be welded to create a monolithic and impermeable surface.

D. Adhesive: As approved by the indoor resilient athletic surfacing manufacturer.

E. Game Line Paint and Primer: As approved by the indoor resilient athletic surfacing manufacturer.

PART 3 - EXECUTION

3.1 *EXAMINATION*

A. It is the responsibility of the general contractor/construction manager to ensure that project/site conditions are acceptable for the installation of the indoor resilient athletic flooring.
B. Verify that the area in which the indoor resilient athletic surfacing will be installed is dry and weather tight. Verify that permanent heat, light and ventilation are installed and operable.
C. Verify that all other work that could cause damage, dirt and dust or interrupt the normal pace of the indoor resilient athletic flooring installation is completed or suspended.
D. Verify that there is a stable room temperature of at least 65◦F.
E. Verify that there are no foreign materials or objects on the subfloor and that the subfloor is clean and ready for installation.
F. *Direct Full Spread Adhering to Concrete Subfloor Multi-Poxy : moisture content less than 98% RH when tested per ASTM F2170.*
G. Follow Fieldturf USA, Inc. installation recommendations.
H. Do not average the results of the tests. Report all field test results in writing to the General Contractor, Architect, and End User prior to installation.
I. Verify that the concrete subfloor surface pH level is within the 7 - 11 range.
J. Document the results confirming the slab is within manufacturer's tolerances for slab deviation.

3.2 *PREPARATION OF SURFACES*

A. Sand the entire surface of the concrete slab.
B. Sweep the concrete slab so as to remove all dirt and dust. If a sweeping compound is to be used it must be a sweeping compound that does not contain oil or other items that may inhibit the adhesive bond.
C. Slab must be dust free. In the event that dust impairs adhesive bond, priming the slab prior to application of adhesive may be necessary. Follow installation guidelines.
D. Follow OSHA guidelines.

3.3 *INSTALLATION*

A. The installation area shall be closed to all traffic and activity for a period to be set by the indoor resilient athletic surfacing installer. The indoor resilient athletic surfacing installation shall not begin until the installer is familiar with the existing conditions.
B. All necessary precautions should be taken to minimize noise, smell, dust, the use of hazardous materials and any other items that may inconvenience others.
C. Install the indoor resilient athletic surfacing in strict accordance with the indoor resilient athletic surfacing manufacturer's written instructions.
D. Install the indoor resilient athletic surfacing minimizing cross seams. Provide a seam diagram during the submittal process for approval prior to installation. Vinyl Sheet Flooring Seams: Comply with ASTM F 1516. Rout joints and heat weld to permanently and seamlessly fuse sections together.
E. Paint game lines using approved game line paint primer and game line paint in strict accordance with the game line paint manufacturer's instructions.
F. Install appropriate threshold plates or transition strips where necessary.

3.5 *CLEANING*

A. Remove all unused materials, tools, and equipment and dispose of any debris properly. Clean the indoor resilient athletic surfacing in accordance with the manufacturer's instructions.

3.6 *PROTECTION*

A. If required, protect the indoor resilient athletic surfacing from damage using coverings approved by the manufacturer until acceptance of work by the customer or their authorized representative.

3.7 *RELATED STANDARDS AND GUIDELINES*

A. ASTM F2170 "Standard Test Method for Determining Relative Humidity In Concrete Floor Slabs Using In-Situ Probes"
B. ASTM F710 "Standard Practice for Preparing Concrete Floors to Receive Resilient Flooring"
C. ACI 302.2R-06 "Guideline for Concrete Slabs that Receive Moisture-Sensitive Flooring Materials"
D. ASTM F2772-11 "Standard Specification for Athletic Performance Properties of Indoor Sports Floor Systems"

END OF SECTION

SECTION 09 65 66
ARCHITECTURAL SPECIFICATIONS FOR INDOOR RESILIENT ATHLETIC SURFACING

PART 1 – GENERAL

1.1 *SECTION INCLUDES*

A. Supply and installation of the indoor resilient multipurpose surfacing
B. Application of the game lines
C. References for the correct construction and preparation of concrete slabs to receive resilient flooring.

1.2 *SUBMITTALS*

A. Product Data:
   1. Manufacturer's promotional brochures, specifications and installation instructions
B. Manufacturer Certifications:
   1. Provide certification that accurately identifies the Original Equipment Manufacturer (OEM) of flooring furnished for this project including manufacturer's name, address and factory location.
   2. Suppliers of private label flooring for this project must identify themselves as such and fully disclose the OEM information listed above.
   3. All "manufacturer" requirements in these specifications must be complied with by the OEM, including warranties, certifications, qualifications, product data, test results, environmental requirements, performance data, etc.
C. Samples:
   1. Submit for selection and approval three (3) sets of the indoor resilient multipurpose surfacing, manufacturer's brochures, samples or sample boards of all of the available colors, textures and styles.
   2. Submit color samples of all the available game line paint colors for selection and approval.
D. Closeout Submittals:
   1. Submit three (3) copies of the indoor resilient multipurpose surfacing and manufacturer's maintenance instructions.
   2. Submit three (3) copies of the material and installation warranties as specified.

1.3 *QUALITY ASSURANCE*

A. Qualifications:
   1. The indoor resilient multipurpose surfacing shall have been actively marketed for a minimum of ten (10) years.
   2. The indoor resilient multipurpose surfacing shall be manufactured in an ISO 9001 certified plant.
   3. The indoor resilient multipurpose surfacing shall be manufactured in an ISO 14001 certified plant.
   4. The indoor resilient multipurpose surfacing supplier shall be an established firm, experienced in the field, and competent in the techniques required by the manufacturer.
   5. The installer of the indoor resilient multipurpose surfacing shall have a minimum of five (5) years of experience in the field installing indoor resilient multipurpose surfacing and have worked on at least five (5) projects of similar size, type and complexity.

B. Certifications:
   1. Installer to submit the indoor resilient athletic surfacing manufacturer's or distributor's certification attesting that they are an approved installer of the indoor resilient multipurpose surfacing.
   2. The ind**o**or resilient multipurpose surfacing manufacturer to submit official ISO 9001 certification for the facility in which the indoor resilient multipurpose surfacing is manufactured.

C. Testing:
   Tests shall be relative for multi-purpose use with certificates from independent testing resources to be made available upon request. Test results shall be performed according to ASTM standard testing procedures including ASTM F2772 "Standard Specification for Athletic Performance Properties of Indoor Sports Floor Systems".

1.4 *DELIVERY, STORAGE AND HANDLING*

A. Delivery:
   Material shall not be delivered until all related work is in place and finished and/or proper storage facilities and conditions can be provided and guaranteed stable according to FieldTurf USA, Inc. recommendations.

B. Storage:
   1. Store the material in a secure, clean and dry location.
   2. Maintain temperature between 55° and 85° Fahrenheit.
   3. Store the indoor resilient athletic surfacing rolls in an upright position on a smooth flat surface immediately upon delivery to jobsite.
   4. Rolls shipped in rigid protective cardboard containers can be laid horizontally prior to unpacking and installation.

1.5 *PROJECT/SITE CONDITIONS*

A. It is the responsibility of the general contractor/construction manager to maintain project/site conditions acceptable for the installation of the indoor resilient multipurpose flooring.

B. The area in which the indoor resilient multipurpose surfacing will be installed shall be dry and weather tight. Permanent heat, light and ventilation shall be installed and operable.

C. All other trades shall have completed their work prior to the installation of the resilient athletic flooring. The general contractor or construction manager shall maintain a secure and clean working environment before, during and after the installation.

D. Maintain a stable room temperature of at least 65°F for a minimum of one (1) week prior to, during and thereafter installation.

E. An effective low-permeance vapor barrier is placed directly beneath the concrete subfloor. For "on" or "below grade" installations, it is recommended to provide a permanent vapor barrier resistant to long term hydrostatic pressure/moisture exposure. Protrusions should be sealed to prevent moisture migration into the slab. Moisture should not be allowed to enter the slab after the completed construction.

F. Concrete subfloor surface pH level within the 7 to 11 range dependent upon installation type.

G. Concrete subfloor should be no greater than 1/8" within a 10 ft diameter. This tolerance can be measured in accordance with ASTM E1155. A specified (F_F) of 50 and an (F_L) of 30 should reach this degree of floor flatness and floor level. There is no numerical correlation between F numbers and the deviation from the straight

edge. However, the above specified numbers should achieve a flat floor with minimal deviation in the slab. Reference ACI 117 and ACI 302.1R. The general contractor should provide a certificate of compliance with the above recommendations.

H. Concrete subfloor must be clean and free of all foreign materials or objects including, but not limited to, curing compounds and sealers.

I. Fill cracks, grooves, voids, depressions, and other minor imperfections. Follow the manufacturer's directions. Moveable joints must be treated utilizing specific transitioning joint devices depending upon the architect's recommendations. Follow current ASTM F710 guidelines for the preparation of concrete slabs to receive resilient flooring.

J. Refer to ACI 302.2R "Guidelines for Concrete Slabs that Receive Moisture-Sensitive Flooring Materials" for concrete design and construction.

K. Concrete slab shall be fortified with continual steel reinforcement. Fiber reinforcement alone shall not be considered adequate fortification.

1.6 *WARRANTY*

A. Special Limited Warranty:
   1. Manufacturer's standard form in which manufacturer agrees to repair or replace sports flooring including labor that fails within specified warranty period.

B. Material warranty must be direct from the product manufacturer.
   1. Material warranties must come from original manufacturer or division thereof. Private label warranties from distributors or brokers are not valid. Supply original point of manufacturing upon request.

C. Failures include, but are not limited to, the following:
   1. Material manufacturing defects.
   2. Surface wear and deterioration to the point of wear-through of wear layer per ASTM F410/ASTM F1303.
   3. Failure due to substrate moisture exposure exceeding 98 percent relative humidity when tested according to ASTM F2170.

D. Warranty Period:
   1. For material defects and surface wear-through: **25** years from date of substantial completion.
   2. For moisture vapor tolerance: **25** years from date of substantial completion.

E. Installer's Limited Warranty:
   1. Installer's standard form in which installer agrees to repair or replace sports flooring that fails due to poor workmanship or faulty installation within the specified warranty period.
   2. Warranty Period: 2 years from date of substantial completion.

1.7 *ADDITIONAL MATERIALS*

A. Furnish to the owner additional materials containing a total of at least 1% of each different color or design of the indoor resilient athletic surfacing used on the project.

1.8 *LEED™ CERTIFICATION*

A. The indoor resilient athletic surfacing should be able to help this facility to achieve points towards *LEED™ certification.* Flooring system must be certified by FloorScore.
B. LEED categories positively affected by the indoor resilient athletic surfacing:

LEED™ V4 Credit		Contribution
Materials & Resources: Building Product Disclosure & Optimization (BPDO)		
MRc3: Sourcing of Raw Materials	Options 1 & 2	2 Points
MRc4: Material Ingredients	Option 1	1 Point
MRc5: Construction and Demolition Management	Reclamation and Recycling	ReStart® Program
Indoor Environmental Quality		
EQc2: Low-Emitting Materials	TVOC: 0.5 mg/m3 or less	FloorScore®

PART 2 - PRODUCTS

2.1 *MANUFACTURERS*

A. The basis of the design for the indoor resilient multipurpose surfacing is Omnisports Extreme as manufactured by Tarkett.
B. All other installation accessories and related components must be either made or approved by the indoor resilient athletic surfacing manufacturer.
C. Other products may be approved as equal if deemed qualified and submitted in accordance with the General Conditions.
D. Test reports confirming compliance from an independent sports laboratory must be provided along with samples, technical data, installation, maintenance, and warranty prior to acceptance as an alternative product.

2.2 *MATERIALS*

A. Omnisports Extreme - Prefabricated sport surface 12 mm (0.47”) with wood flooring design and slightly textured embossed surface as supplied by Tarkett.
   1. Embossing of wood design and solid colors must be the same; varying embossing or surface textures will not be allowed.
   2. Printing of wood design shall closely resemble standard wood strip flooring in size, color, board length, and grain appearance.
   3. The wood design shall be protected by a clear layer of pure PVC (Polyvinyl Chloride) and TopClean xp, a factory-applied UV cured urethane treatment.
   4. Intermediate layers shall be fortified with a non-woven fiberglass grid for increased dimensional stability.
   5. The foam force reduction layer shall be high-density closed cell PVC foam with honeycomb embossing, and is applied in one continuous manufacturing process.
   6. Laminated or adhered foam layers will not be allowed.
   7. Field constructed products will not be accepted.

A. Physical properties of the indoor resilient athletic surfacing shall conform to the following minimums:

Width	—	6’ 6” (2 m)
Length	—	49.2' (15m) approx.
Wear Layer	—	2 mm
Total Thickness	—	12 mm
Wear Layer	Type 1– Grade 1	ASTM F1303/F410
Vertical Deformation	PASSED	ASTM F2772
Rolling Load	PASSED	0.30 (EN 1569 {11/1999})
Surface Finish Effect	PASSED	ASTM F2772 (80 – 110)
Chemical Resistance	Excellent	ASTM F925
Impact Resistance	PASSED	EN 1717
Abrasion Resistance	PASSED	0.10 (EN ISO 5470-1 {06/1999})
Static Load Limit	PASSED	ASTM F970- Load 175 Lbs
Sound Insulation	Excellent	+/= 21 dB (ISO 717/2)
In-Room Sound Insulation	Excellent	61dB (NF S31-074)
Ball Rebound	PASSED	ASTM F2772 > 90%
Force Reduction	PASSED	ASTM F2772 Class 4
Fire Rating	PASSED	ASTM E648 Class 1
Microbial Assays Test	No Growth	G21 ASTM - Backing
Phthalate-free technology	—	YES
REACH Compliant	—	YES
Heavy Metals	—	NO
ISO 9001	—	YES
ISO 14001	—	YES

1. Color: As available from the indoor resilient athletic surfacing manufacturer’s standard range.
2. Hardwood Design Series: High definition printing for a realistic wood surface appearance as available from the indoor resilient athletic surfacing manufacturer’s standard range.
3. Texture: Texture to remain consistent between solid colors and wood design when blending colors.

C. Welding Rod: As supplied by the indoor resilient athletic surfacing manufacturer or supplier.
   1. Color to blend with the indoor resilient athletic surfacing color or design.
   2. All seams shall be welded to create a monolithic and impermeable surface.

D. Adhesive: As approved by the indoor resilient athletic surfacing manufacturer.

E. Game Line Paint and Primer: As approved by the indoor resilient athletic surfacing manufacturer.

PART 3 - EXECUTION

3.1 *EXAMINATION*

A. It is the responsibility of the general contractor/construction manager to ensure that project/site conditions are acceptable for the installation of the indoor resilient athletic flooring.
B. Verify that the area in which the indoor resilient athletic surfacing will be installed is dry and weather tight. Verify that permanent heat, light and ventilation are installed and operable.
C. Verify that all other work that could cause damage, dirt and dust or interrupt the normal pace of the indoor resilient athletic flooring installation is completed or suspended.
D. Verify that there is a stable room temperature of at least 65◦F.
E. Verify that there are no foreign materials or objects on the subfloor and that the subfloor is clean and ready for installation.
F. *Direct Full Spread Adhering to Concrete Subfloor Multi-Set : moisture content less than 83% RH when tested per ASTM F2170.*
G. Follow Fieldturf USA, Inc. installation recommendations.
H. Do not average the results of the tests. Report all field test results in writing to the General Contractor, Architect, and End User prior to installation.
I. Verify that the concrete subfloor surface pH level is within the 7 - 11 range.
J. Document the results confirming the slab is within manufacturer's tolerances for slab deviation.

3.2 *PREPARATION OF SURFACES*

A. Sand the entire surface of the concrete slab.
B. Sweep the concrete slab so as to remove all dirt and dust. If a sweeping compound is to be used it must be a sweeping compound that does not contain oil or other items that may inhibit the adhesive bond.
C. Slab must be dust free. In the event that dust impairs adhesive bond, priming the slab prior to application of adhesive may be necessary. Follow installation guidelines.
D. Follow OSHA guidelines.

3.3 *INSTALLATION*

A. The installation area shall be closed to all traffic and activity for a period to be set by the indoor resilient athletic surfacing installer. The indoor resilient athletic surfacing installation shall not begin until the installer is familiar with the existing conditions.
B. All necessary precautions should be taken to minimize noise, smell, dust, the use of hazardous materials and any other items that may inconvenience others.
C. Install the indoor resilient athletic surfacing in strict accordance with the indoor resilient athletic surfacing manufacturer's written instructions.
D. Install the indoor resilient athletic surfacing minimizing cross seams. Provide a seam diagram during the submittal process for approval prior to installation. Vinyl Sheet Flooring Seams: Comply with ASTM F 1516. Rout joints and heat weld to permanently and seamlessly fuse sections together.
E. Paint game lines using approved game line paint primer and game line paint in strict accordance with the game line paint manufacturer's instructions.
F. Install appropriate threshold plates or transition strips where necessary.

3.5 *CLEANING*

A. Remove all unused materials, tools, and equipment and dispose of any debris properly. Clean the indoor resilient athletic surfacing in accordance with the manufacturer's instructions.

3.6 *PROTECTION*

A. If required, protect the indoor resilient athletic surfacing from damage using coverings approved by the manufacturer until acceptance of work by the customer or their authorized representative.

3.7 *RELATED STANDARDS AND GUIDELINES*

A. ASTM F2170 "Standard Test Method for Determining Relative Humidity In Concrete Floor Slabs Using In-Situ Probes"
B. ASTM F710 "Standard Practice for Preparing Concrete Floors to Receive Resilient Flooring"
C. ACI 302.2R-06 "Guideline for Concrete Slabs that Receive Moisture-Sensitive Flooring Materials"
D. ASTM F2772-11 "Standard Specification for Athletic Performance Properties of Indoor Sports Floor Systems"

END OF SECTION

SECTION 09 65 66
ARCHITECTURAL SPECIFICATIONS FOR INDOOR RESILIENT ATHLETIC SURFACING

PART 1 – GENERAL

1.1 *SECTION INCLUDES*

A. Supply and installation of the indoor resilient multipurpose surfacing
B. Application of the game lines
C. References for the correct construction and preparation of concrete slabs to receive resilient flooring.

1.2 *SUBMITTALS*

A. Product Data:
   1. Manufacturer's promotional brochures, specifications and installation instructions
B. Manufacturer Certifications:
   1. Provide certification that accurately identifies the Original Equipment Manufacturer (OEM) of flooring furnished for this project including manufacturer's name, address and factory location.
   2. Suppliers of private label flooring for this project must identify themselves as such and fully disclose the OEM information listed above.
   3. All "manufacturer" requirements in these specifications must be complied with by the OEM, including warranties, certifications, qualifications, product data, test results, environmental requirements, performance data, etc.
C. Samples:
   1. Submit for selection and approval three (3) sets of the indoor resilient multipurpose surfacing, manufacturer's brochures, samples or sample boards of all of the available colors, textures and styles.
   2. Submit color samples of all the available game line paint colors for selection and approval.
D. Closeout Submittals:
   1. Submit three (3) copies of the indoor resilient multipurpose surfacing and manufacturer's maintenance instructions.
   2. Submit three (3) copies of the material and installation warranties as specified.

1.3 *QUALITY ASSURANCE*

A. Qualifications:
   1. The indoor resilient multipurpose surfacing shall have been actively marketed for a minimum of ten (10) years.
   2. The indoor resilient multipurpose surfacing shall be manufactured in an ISO 9001 certified plant.
   3. The indoor resilient multipurpose surfacing shall be manufactured in an ISO 14001 certified plant.
   4. The indoor resilient multipurpose surfacing supplier shall be an established firm, experienced in the field, and competent in the techniques required by the manufacturer.
   5. The installer of the indoor resilient multipurpose surfacing shall have a minimum of five (5) years of experience in the field installing indoor resilient multipurpose surfacing and have worked on at least five (5) projects of similar size, type and complexity.

B. Certifications:
   1. Installer to submit the indoor resilient athletic surfacing manufacturer's or distributor's certification attesting that they are an approved installer of the indoor resilient multipurpose surfacing.
   2. The ind**o**or resilient multipurpose surfacing manufacturer to submit official ISO 9001 certification for the facility in which the indoor resilient multipurpose surfacing is manufactured.

C. Testing:
   Tests shall be relative for multi-purpose use with certificates from independent testing resources to be made available upon request. Test results shall be performed according to ASTM standard testing procedures including ASTM F2772 "Standard Specification for Athletic Performance Properties of Indoor Sports Floor Systems".

1.4 *DELIVERY, STORAGE AND HANDLING*

A. Delivery:
   Material shall not be delivered until all related work is in place and finished and/or proper storage facilities and conditions can be provided and guaranteed stable according to FieldTurf USA, Inc. recommendations.

B. Storage:
   1. Store the material in a secure, clean and dry location.
   2. Maintain temperature between 55° and 85° Fahrenheit.
   3. Store the indoor resilient athletic surfacing rolls in an upright position on a smooth flat surface immediately upon delivery to jobsite.
   4. Rolls shipped in rigid protective cardboard containers can be laid horizontally prior to unpacking and installation.

1.5 *PROJECT/SITE CONDITIONS*

A. It is the responsibility of the general contractor/construction manager to maintain project/site conditions acceptable for the installation of the indoor resilient multipurpose flooring.

B. The area in which the indoor resilient multipurpose surfacing will be installed shall be dry and weather tight. Permanent heat, light and ventilation shall be installed and operable.

C. All other trades shall have completed their work prior to the installation of the resilient athletic flooring. The general contractor or construction manager shall maintain a secure and clean working environment before, during and after the installation.

D. Maintain a stable room temperature of at least 65°F for a minimum of one (1) week prior to, during and thereafter installation.

E. An effective low-permeance vapor barrier is placed directly beneath the concrete subfloor. For "on" or "below grade" installations, it is recommended to provide a permanent vapor barrier resistant to long term hydrostatic pressure/moisture exposure. Protrusions should be sealed to prevent moisture migration into the slab. Moisture should not be allowed to enter the slab after the completed construction.

F. Concrete subfloor surface pH level within the 7 to 11 range dependent upon installation type.

G. Concrete subfloor should be no greater than 1/8" within a 10 ft diameter. This tolerance can be measured in accordance with ASTM E1155. A specified (F_F) of 50 and an (F_L) of 30 should reach this degree of floor flatness and floor level. There is no numerical correlation between F numbers and the deviation from the straight

edge. However, the above specified numbers should achieve a flat floor with minimal deviation in the slab. Reference ACI 117 and ACI 302.1R. The general contractor should provide a certificate of compliance with the above recommendations.

H. Concrete subfloor must be clean and free of all foreign materials or objects including, but not limited to, curing compounds and sealers.

I. Fill cracks, grooves, voids, depressions, and other minor imperfections. Follow the manufacturer's directions. Moveable joints must be treated utilizing specific transitioning joint devices depending upon the architect's recommendations. Follow current ASTM F710 guidelines for the preparation of concrete slabs to receive resilient flooring.

J. Refer to ACI 302.2R "Guidelines for Concrete Slabs that Receive Moisture-Sensitive Flooring Materials" for concrete design and construction.

K. Concrete slab shall be fortified with continual steel reinforcement. Fiber reinforcement alone shall not be considered adequate fortification.

1.6 *WARRANTY*

A. Special Limited Warranty:
   1. Manufacturer's standard form in which manufacturer agrees to repair or replace sports flooring including labor that fails within specified warranty period.

B. Material warranty must be direct from the product manufacturer.
   1. Material warranties must come from original manufacturer or division thereof. Private label warranties from distributors or brokers are not valid. Supply original point of manufacturing upon request.

C. Failures include, but are not limited to, the following:
   1. Material manufacturing defects.
   2. Surface wear and deterioration to the point of wear-through of wear layer per ASTM F410/ASTM F1303.
   3. Failure due to substrate moisture exposure exceeding 98 percent relative humidity when tested according to ASTM F2170.

D. Warranty Period:
   1. For material defects and surface wear-through: **25** years from date of substantial completion.
   2. For moisture vapor tolerance: **25** years from date of substantial completion.

E. Installer's Limited Warranty:
   1. Installer's standard form in which installer agrees to repair or replace sports flooring that fails due to poor workmanship or faulty installation within the specified warranty period.
   2. Warranty Period: 2 years from date of substantial completion.

1.7 *ADDITIONAL MATERIALS*

A. Furnish to the owner additional materials containing a total of at least 1% of each different color or design of the indoor resilient athletic surfacing used on the project.

1.8 *LEED™ CERTIFICATION*

A. The indoor resilient athletic surfacing should be able to help this facility to achieve points towards *LEED™ certification.* Flooring system must be certified by FloorScore.
B. LEED categories positively affected by the indoor resilient athletic surfacing:

LEED™ V4 Credit		Contribution
Materials & Resources: Building Product Disclosure & Optimization (BPDO)		
MRc3: Sourcing of Raw Materials	Options 1 & 2	2 Points
MRc4: Material Ingredients	Option 1	1 Point
MRc5: Construction and Demolition Management	Reclamation and Recycling	ReStart® Program
Indoor Environmental Quality		
EQc2: Low-Emitting Materials	TVOC: 0.5 mg/m3 or less	FloorScore®

PART 2 - PRODUCTS

2.1 *MANUFACTURERS*

A. The basis of the design for the indoor resilient multipurpose surfacing is Omnisports Extreme as manufactured by Tarkett.
B. All other installation accessories and related components must be either made or approved by the indoor resilient athletic surfacing manufacturer.
C. Other products may be approved as equal if deemed qualified and submitted in accordance with the General Conditions.
D. Test reports confirming compliance from an independent sports laboratory must be provided along with samples, technical data, installation, maintenance, and warranty prior to acceptance as an alternative product.

2.2 *MATERIALS*

A. Omnisports Extreme - Prefabricated sport surface 12 mm (0.47”) with wood flooring design and slightly textured embossed surface as supplied by Tarkett.
   1. Embossing of wood design and solid colors must be the same; varying embossing or surface textures will not be allowed.
   2. Printing of wood design shall closely resemble standard wood strip flooring in size, color, board length, and grain appearance.
   3. The wood design shall be protected by a clear layer of pure PVC (Polyvinyl Chloride) and TopClean xp, a factory-applied UV cured urethane treatment.
   4. Intermediate layers shall be fortified with a non-woven fiberglass grid for increased dimensional stability.
   5. The foam force reduction layer shall be high-density closed cell PVC foam with honeycomb embossing, and is applied in one continuous manufacturing process.
   6. Laminated or adhered foam layers will not be allowed.
   7. Field constructed products will not be accepted.

A. Physical properties of the indoor resilient athletic surfacing shall conform to the following minimums:

Width	—	6’ 6” (2 m)
Length	—	49.2' (15m) approx.
Wear Layer	—	2 mm
Total Thickness	—	12 mm
Wear Layer	Type 1– Grade 1	ASTM F1303/F410
Vertical Deformation	PASSED	ASTM F2772
Rolling Load	PASSED	0.30 (EN 1569 {11/1999})
Surface Finish Effect	PASSED	ASTM F2772 (80 – 110)
Chemical Resistance	Excellent	ASTM F925
Impact Resistance	PASSED	EN 1717
Abrasion Resistance	PASSED	0.10 (EN ISO 5470-1 {06/1999})
Static Load Limit	PASSED	ASTM F970- Load 175 Lbs
Sound Insulation	Excellent	+/= 21 dB (ISO 717/2)
In-Room Sound Insulation	Excellent	61dB (NF S31-074)
Ball Rebound	PASSED	ASTM F2772 > 90%
Force Reduction	PASSED	ASTM F2772 Class 4
Fire Rating	PASSED	ASTM E648 Class 1
Microbial Assays Test	No Growth	G21 ASTM - Backing
Phthalate-free technology	—	YES
REACH Compliant	—	YES
Heavy Metals	—	NO
ISO 9001	—	YES
ISO 14001	—	YES

1. Color: As available from the indoor resilient athletic surfacing manufacturer’s standard range.
2. Hardwood Design Series: High definition printing for a realistic wood surface appearance as available from the indoor resilient athletic surfacing manufacturer’s standard range.
3. Texture: Texture to remain consistent between solid colors and wood design when blending colors.

C. Tarkolay – A high quality low permeance slip sheet vapor retarder designed to separate the installed system from the substrate below.
   1. Tarkolay as manufactured by Tarkett can be used below, on, or above grade substrates that experience elevated moisture conditions.
   2. Moisture tolerances shall have no limitation per ASTM F2170. Physical properties of the indoor resilient athletic surfacing shall conform to the following minimums:

Width	—	6’ 6” (2 m)
Length	—	147’7”’ (45 m) approx.
Total Thickness	—	1.3 mm
Dimensional Stability	PASSED	.01% (EN 1434)
Permeance	Excellent	<0.20 (ASTM E96

D. Welding Rod: As supplied by the indoor resilient athletic surfacing manufacturer or supplier.
   1. Color to blend with the indoor resilient athletic surfacing color or design.
   2. All seams shall be welded to create a monolithic and impermeable surface.
E. Adhesive: As approved by the indoor resilient athletic surfacing manufacturer.
F. Game Line Paint and Primer: As approved by the indoor resilient athletic surfacing manufacturer.

PART 3 - EXECUTION

3.1 *EXAMINATION*

A. It is the responsibility of the general contractor/construction manager to ensure that project/site conditions are acceptable for the installation of the indoor resilient athletic flooring.
B. Verify that the area in which the indoor resilient athletic surfacing will be installed is dry and weather tight. Verify that permanent heat, light and ventilation are installed and operable.
C. Verify that all other work that could cause damage, dirt and dust or interrupt the normal pace of the indoor resilient athletic flooring installation is completed or suspended.
D. Verify that there is a stable room temperature of at least 65°F.
E. Verify that there are no foreign materials or objects on the subfloor and that the subfloor is clean and ready for installation.
F. *Installation with Tarkolay to Concrete Subfloor : moisture content no limitation when tested per ASTM F2170.*
G. Follow Fieldturf USA, Inc. installation recommendations.
H. Do not average the results of the tests. Report all field test results in writing to the General Contractor, Architect, and End User prior to installation.
I. Verify that the concrete subfloor surface pH level is within the 7 - 11 range.
J. Document the results confirming the slab is within manufacturer's tolerances for slab deviation.

3.2 *PREPARATION OF SURFACES*

A. Sand the entire surface of the concrete slab.
B. Sweep the concrete slab so as to remove all dirt and dust. If a sweeping compound is to be used it must be a sweeping compound that does not contain oil or other items that may inhibit the adhesive bond.
C. Slab must be dust free. In the event that dust impairs adhesive bond, priming the slab prior to application of adhesive may be necessary. Follow installation guidelines.
D. Follow OSHA guidelines.

3.3 *INSTALLATION*

A. The installation area shall be closed to all traffic and activity for a period to be set by the indoor resilient athletic surfacing installer. The indoor resilient athletic surfacing installation shall not begin until the installer is familiar with the existing conditions.
B. All necessary precautions should be taken to minimize noise, smell, dust, the use of hazardous materials and any other items that may inconvenience others.
C. Install the indoor resilient athletic surfacing in strict accordance with the indoor resilient athletic surfacing manufacturer's written instructions.
D. Install the indoor resilient athletic surfacing minimizing cross seams. Provide a seam diagram during the submittal process for approval prior to installation. Vinyl Sheet Flooring Seams: Comply with ASTM F 1516. Rout joints and heat weld to permanently and seamlessly fuse sections together.
E. Paint game lines using approved game line paint primer and game line paint in strict accordance with the game line paint manufacturer's instructions.
F. Install appropriate threshold plates or transition strips where necessary.

3.5 *CLEANING*

A. Remove all unused materials, tools, and equipment and dispose of any debris properly. Clean the indoor resilient athletic surfacing in accordance with the manufacturer's instructions.

3.6 *PROTECTION*

A. If required, protect the indoor resilient athletic surfacing from damage using coverings approved by the manufacturer until acceptance of work by the customer or their authorized representative.

3.7 *RELATED STANDARDS AND GUIDELINES*

A. ASTM F2170 "Standard Test Method for Determining Relative Humidity In Concrete Floor Slabs Using In-Situ Probes"
B. ASTM F710 "Standard Practice for Preparing Concrete Floors to Receive Resilient Flooring"
C. ACI 302.2R-06 "Guideline for Concrete Slabs that Receive Moisture-Sensitive Flooring Materials"
D. ASTM F2772-11 "Standard Specification for Athletic Performance Properties of Indoor Sports Floor Systems"

END OF SECTION

SECTION 09 65 66
ARCHITECTURAL SPECIFICATIONS FOR INDOOR RESILIENT ATHLETIC SURFACING

PART 1 – GENERAL

1.1 *SECTION INCLUDES*

A. Supply and installation of the indoor resilient multipurpose surfacing
B. Application of the game lines
C. References for the correct construction and preparation of concrete slabs to receive resilient flooring.

1.2 *SUBMITTALS*

A. Product Data:
   1. Manufacturer's promotional brochures, specifications and installation instructions
B. Manufacturer Certifications:
   1. Provide certification that accurately identifies the Original Equipment Manufacturer (OEM) of flooring furnished for this project including manufacturer's name, address and factory location.
   2. Suppliers of private label flooring for this project must identify themselves as such and fully disclose the OEM information listed above.
   3. All "manufacturer" requirements in these specifications must be complied with by the OEM, including warranties, certifications, qualifications, product data, test results, environmental requirements, performance data, etc.
C. Samples:
   1. Submit for selection and approval three (3) sets of the indoor resilient multipurpose surfacing, manufacturer's brochures, samples or sample boards of all of the available colors, textures and styles.
   2. Submit color samples of all the available game line paint colors for selection and approval.
D. Closeout Submittals:
   1. Submit three (3) copies of the indoor resilient multipurpose surfacing and manufacturer's maintenance instructions.
   2. Submit three (3) copies of the material and installation warranties as specified.

1.3 *QUALITY ASSURANCE*

A. Qualifications:
   1. The indoor resilient multipurpose surfacing shall have been actively marketed for a minimum of ten (10) years.
   2. The indoor resilient multipurpose surfacing shall be manufactured in an ISO 9001 certified plant.
   3. The indoor resilient multipurpose surfacing shall be manufactured in an ISO 14001 certified plant.
   4. The indoor resilient multipurpose surfacing supplier shall be an established firm, experienced in the field, and competent in the techniques required by the manufacturer.
   5. The installer of the indoor resilient multipurpose surfacing shall have a minimum of five (5) years of experience in the field installing indoor resilient multipurpose surfacing and have worked on at least five (5) projects of similar size, type and complexity.

B. Certifications:
   1. Installer to submit the indoor resilient athletic surfacing manufacturer's or distributor's certification attesting that they are an approved installer of the indoor resilient multipurpose surfacing.
   2. The ind**o**or resilient multipurpose surfacing manufacturer to submit official ISO 9001 certification for the facility in which the indoor resilient multipurpose surfacing is manufactured.

C. Testing:
   Tests shall be relative for multi-purpose use with certificates from independent testing resources to be made available upon request. Test results shall be performed according to ASTM standard testing procedures including ASTM F2772 "Standard Specification for Athletic Performance Properties of Indoor Sports Floor Systems".

1.4 *DELIVERY, STORAGE AND HANDLING*

A. Delivery:
   Material shall not be delivered until all related work is in place and finished and/or proper storage facilities and conditions can be provided and guaranteed stable according to FieldTurf USA, Inc. recommendations.

B. Storage:
   1. Store the material in a secure, clean and dry location.
   2. Maintain temperature between 55° and 85° Fahrenheit.
   3. Store the indoor resilient athletic surfacing rolls in an upright position on a smooth flat surface immediately upon delivery to jobsite.
   4. Rolls shipped in rigid protective cardboard containers can be laid horizontally prior to unpacking and installation.

1.5 *PROJECT/SITE CONDITIONS*

A. It is the responsibility of the general contractor/construction manager to maintain project/site conditions acceptable for the installation of the indoor resilient multipurpose flooring.

B. The area in which the indoor resilient multipurpose surfacing will be installed shall be dry and weather tight. Permanent heat, light and ventilation shall be installed and operable.

C. All other trades shall have completed their work prior to the installation of the resilient athletic flooring. The general contractor or construction manager shall maintain a secure and clean working environment before, during and after the installation.

D. Maintain a stable room temperature of at least 65°F for a minimum of one (1) week prior to, during and thereafter installation.

E. An effective low-permeance vapor barrier is placed directly beneath the concrete subfloor. For "on" or "below grade" installations, it is recommended to provide a permanent vapor barrier resistant to long term hydrostatic pressure/moisture exposure. Protrusions should be sealed to prevent moisture migration into the slab. Moisture should not be allowed to enter the slab after the completed construction.

F. Concrete subfloor surface pH level within the 7 to 11 range dependent upon installation type.

G. Concrete subfloor should be no greater than 1/8" within a 10 ft diameter. This tolerance can be measured in accordance with ASTM E1155. A specified (F_F) of 50 and an (F_L) of 30 should reach this degree of floor flatness and floor level. There is no numerical correlation between F numbers and the deviation from the straight

edge. However, the above specified numbers should achieve a flat floor with minimal deviation in the slab. Reference ACI 117 and ACI 302.1R. The general contractor should provide a certificate of compliance with the above recommendations.

H. Concrete subfloor must be clean and free of all foreign materials or objects including, but not limited to, curing compounds and sealers.

I. Fill cracks, grooves, voids, depressions, and other minor imperfections. Follow the manufacturer's directions. Moveable joints must be treated utilizing specific transitioning joint devices depending upon the architect's recommendations. Follow current ASTM F710 guidelines for the preparation of concrete slabs to receive resilient flooring.

J. Refer to ACI 302.2R "Guidelines for Concrete Slabs that Receive Moisture-Sensitive Flooring Materials" for concrete design and construction.

K. Concrete slab shall be fortified with continual steel reinforcement. Fiber reinforcement alone shall not be considered adequate fortification.

1.6 *WARRANTY*

A. Special Limited Warranty:
   1. Manufacturer's standard form in which manufacturer agrees to repair or replace sports flooring including labor that fails within specified warranty period.

B. Material warranty must be direct from the product manufacturer.
   1. Material warranties must come from original manufacturer or division thereof. Private label warranties from distributors or brokers are not valid. Supply original point of manufacturing upon request.

C. Failures include, but are not limited to, the following:
   1. Material manufacturing defects.
   2. Surface wear and deterioration to the point of wear-through of wear layer per ASTM F410/ASTM F1303.
   3. Failure due to substrate moisture exposure exceeding 98 percent relative humidity when tested according to ASTM F2170.

D. Warranty Period:
   1. <u>For material defects and surface wear-through:</u> **15** years from date of substantial completion.
   2. <u>For moisture vapor tolerance:</u> **15** years from date of substantial completion.

E. Installer's Limited Warranty:
   1. Installer's standard form in which installer agrees to repair or replace sports flooring that fails due to poor workmanship or faulty installation within the specified warranty period.
   2. Warranty Period: 2 years from date of substantial completion.

1.7 *ADDITIONAL MATERIALS*

A. Furnish to the owner additional materials containing a total of at least 1% of each different color or design of the indoor resilient athletic surfacing used on the project.

1.8 *LEED™ CERTIFICATION*

A. The indoor resilient athletic surfacing should be able to help this facility to achieve points towards *LEED™ certification.*
B. LEED categories positively affected by the indoor resilient athletic surfacing:

LEED™ V4 Credit		Contribution
Materials & Resources: Building Product Disclosure & Optimization (BPDO)		
MRc3: Sourcing of Raw Materials	Options 1 & 2	2 Points
MRc4: Material Ingredients	Option 1	1 Point
MRc5: Construction and Demolition Management	Reclamation and Recycling	ReStart® Program

PART 2 - PRODUCTS

2.1 *MANUFACTURERS*

A. The basis of the design for the indoor resilient multipurpose surfacing is Omnisports HPL 7 mm as manufactured by Tarkett.
B. All other installation accessories and related components must be either made or approved by the indoor resilient athletic surfacing manufacturer.
C. Other products may be approved as equal if deemed qualified and submitted in accordance with the General Conditions.
D. Test reports confirming compliance from an independent sports laboratory must be provided along with samples, technical data, installation, maintenance, and warranty prior to acceptance as an alternative product.

2.2 *MATERIALS*

A. Omnisports HPL 7 mm - Prefabricated sport surface with wood flooring design and slightly textured embossed surface as supplied by Tarkett.
   1. Embossing of wood design and solid colors must be the same; varying embossing or surface textures will not be allowed.
   2. Printing of wood design shall closely resemble standard wood strip flooring in size, color, board length, and grain appearance.
   3. The wood design shall be protected by a clear layer of pure PVC (Polyvinyl Chloride) and TopClean xp, a factory-applied UV cured urethane treatment.
   4. Intermediate layers shall be fortified with a non-woven fiberglass grid for increased dimensional stability.
   5. A high density load resistant underlayment, field constructed and installed per manufacturer's construction specifications incorporated to provide higher load resistance.

B. Physical properties of the indoor resilient athletic surfacing shall conform to the following minimums:

Width	Omnisports	6′ 6″ (2 m)
Length	Omnisports	85′ (25.9m) approx.
Wear Layer	Omnisports	2 mm
Total Thickness	Omnisports HPL	7 mm (5 + 2)
High Density Underlayment	ASTM D297	0.67 g/cm^3
Tear Strength	ASTM D412	410-425 min. Die C
Elongation	ASTM D412	120-125 min. Die C
Static Load	ASTM F970	500 psi
Reaction to Fire	ASTM E648	Class 1
Specular Gloss	EN ISO 2813	13%
Wear Layer	Type 1, Grade 1	ASTM F1303/F410
Taber Abrasion	ASTM D3389	0.02 g (1000 cycles)
Stain Resistance	ASTM F925	Excellent
Moisture Tolerance with Multi-Poxy	ASTM F2170	98% RH
Vertical Deformation	PASSED	ASTM F2772
Surface Finish Effect	PASSED	ASTM F2772 (80 - 100)
Ball Rebound	PASSED	ASTM F2772 >90%
Force Reduction	PASSED	ASTM F2772 Class 1
Phthalate-free technology	—	YES
REACH Compliant	—	YES
Heavy Metals	—	NO
ISO 9001	—	YES
ISO 14001	—	YES

1. Color: As available from the indoor resilient athletic surfacing manufacturer's standard range.
2. Hardwood Design Series: High definition printing for a realistic wood surface appearance as available from the indoor resilient athletic surfacing manufacturer's standard range.
3. Texture: Texture to remain consistent between solid colors and wood design when blending colors.

C. Welding Rod: As supplied by the indoor resilient athletic surfacing manufacturer or supplier.
   1. Color to blend with the indoor resilient athletic surfacing color or design.
   2. All seams shall be welded to create a monolithic and impermeable surface.

D. Adhesive: As approved by the indoor resilient athletic surfacing manufacturer.

E. Game Line Paint and Primer: As approved by the indoor resilient athletic surfacing manufacturer.

PART 3 - EXECUTION

3.1 *EXAMINATION*

A. It is the responsibility of the general contractor/construction manager to ensure that project/site conditions are acceptable for the installation of the indoor resilient athletic flooring.
B. Verify that the area in which the indoor resilient athletic surfacing will be installed is dry and weather tight. Verify that permanent heat, light and ventilation are installed and operable.
C. Verify that all other work that could cause damage, dirt and dust or interrupt the normal pace of the indoor resilient athletic flooring installation is completed or suspended.
D. Verify that there is a stable room temperature of at least 65◦F.
E. Verify that there are no foreign materials or objects on the subfloor and that the subfloor is clean and ready for installation.
F. *Direct Full Spread Adhering to Concrete Subfloor Multi-Poxy : moisture content less than 98% RH when tested per ASTM F2170.*
G. Follow Fieldturf USA, Inc. installation recommendations.
H. Do not average the results of the tests. Report all field test results in writing to the General Contractor, Architect, and End User prior to installation.
I. Verify that the concrete subfloor surface pH level is within the 7 - 11 range.
J. Document the results confirming the slab is within manufacturer's tolerances for slab deviation.

3.2 *PREPARATION OF SURFACES*

A. Sand the entire surface of the concrete slab.
B. Sweep the concrete slab so as to remove all dirt and dust. If a sweeping compound is to be used it must be a sweeping compound that does not contain oil or other items that may inhibit the adhesive bond.
C. Slab must be dust free. In the event that dust impairs adhesive bond, priming the slab prior to application of adhesive may be necessary. Follow installation guidelines.
D. Follow OSHA guidelines.

3.3 *INSTALLATION*

A. The installation area shall be closed to all traffic and activity for a period to be set by the indoor resilient athletic surfacing installer. The indoor resilient athletic surfacing installation shall not begin until the installer is familiar with the existing conditions.
B. All necessary precautions should be taken to minimize noise, smell, dust, the use of hazardous materials and any other items that may inconvenience others.
C. Install the indoor resilient athletic surfacing in strict accordance with the indoor resilient athletic surfacing manufacturer's written instructions.
D. Install the indoor resilient athletic surfacing minimizing cross seams. Provide a seam diagram during the submittal process for approval prior to installation. Vinyl Sheet Flooring Seams: Comply with ASTM F 1516. Rout joints and heat weld to permanently and seamlessly fuse sections together.
E. Paint game lines using approved game line paint primer and game line paint in strict accordance with the game line paint manufacturer's instructions.
F. Install appropriate threshold plates or transition strips where necessary.

3.5 *CLEANING*

A. Remove all unused materials, tools, and equipment and dispose of any debris properly. Clean the indoor resilient athletic surfacing in accordance with the manufacturer's instructions.

3.6 *PROTECTION*

A. If required, protect the indoor resilient athletic surfacing from damage using coverings approved by the manufacturer until acceptance of work by the customer or their authorized representative.

3.7 *RELATED STANDARDS AND GUIDELINES*

A. ASTM F2170 "Standard Test Method for Determining Relative Humidity In Concrete Floor Slabs Using In-Situ Probes"
B. ASTM F710 "Standard Practice for Preparing Concrete Floors to Receive Resilient Flooring"
C. ACI 302.2R-06 "Guideline for Concrete Slabs that Receive Moisture-Sensitive Flooring Materials"
D. ASTM F2772-11 "Standard Specification for Athletic Performance Properties of Indoor Sports Floor Systems"

END OF SECTION

SECTION 09 65 66
ARCHITECTURAL SPECIFICATIONS FOR INDOOR RESILIENT ATHLETIC SURFACING

PART 1 – GENERAL

1.1 *SECTION INCLUDES*

A. Supply and installation of the indoor resilient multipurpose surfacing
B. Application of the game lines
C. References for the correct construction and preparation of concrete slabs to receive resilient flooring.

1.2 *SUBMITTALS*

A. Product Data:
   1. Manufacturer's promotional brochures, specifications and installation instructions
B. Manufacturer Certifications:
   1. Provide certification that accurately identifies the Original Equipment Manufacturer (OEM) of flooring furnished for this project including manufacturer's name, address and factory location.
   2. Suppliers of private label flooring for this project must identify themselves as such and fully disclose the OEM information listed above.
   3. All "manufacturer" requirements in these specifications must be complied with by the OEM, including warranties, certifications, qualifications, product data, test results, environmental requirements, performance data, etc.
C. Samples:
   1. Submit for selection and approval three (3) sets of the indoor resilient multipurpose surfacing, manufacturer's brochures, samples or sample boards of all of the available colors, textures and styles.
   2. Submit color samples of all the available game line paint colors for selection and approval.
D. Closeout Submittals:
   1. Submit three (3) copies of the indoor resilient multipurpose surfacing and manufacturer's maintenance instructions.
   2. Submit three (3) copies of the material and installation warranties as specified.

1.3 *QUALITY ASSURANCE*

A. Qualifications:
   1. The indoor resilient multipurpose surfacing shall have been actively marketed for a minimum of ten (10) years.
   2. The indoor resilient multipurpose surfacing shall be manufactured in an ISO 9001 certified plant.
   3. The indoor resilient multipurpose surfacing shall be manufactured in an ISO 14001 certified plant.
   4. The indoor resilient multipurpose surfacing supplier shall be an established firm, experienced in the field, and competent in the techniques required by the manufacturer.
   5. The installer of the indoor resilient multipurpose surfacing shall have a minimum of five (5) years of experience in the field installing indoor resilient multipurpose surfacing and have worked on at least five (5) projects of similar size, type and complexity.

B. Certifications:
   1. Installer to submit the indoor resilient athletic surfacing manufacturer's or distributor's certification attesting that they are an approved installer of the indoor resilient multipurpose surfacing.
   2. The ind**o**or resilient multipurpose surfacing manufacturer to submit official ISO 9001 certification for the facility in which the indoor resilient multipurpose surfacing is manufactured.

C. Testing:
   Tests shall be relative for multi-purpose use with certificates from independent testing resources to be made available upon request. Test results shall be performed according to ASTM standard testing procedures including ASTM F2772 "Standard Specification for Athletic Performance Properties of Indoor Sports Floor Systems".

1.4 *DELIVERY, STORAGE AND HANDLING*

A. Delivery:
   Material shall not be delivered until all related work is in place and finished and/or proper storage facilities and conditions can be provided and guaranteed stable according to FieldTurf USA, Inc. recommendations.

B. Storage:
   1. Store the material in a secure, clean and dry location.
   2. Maintain temperature between 55° and 85° Fahrenheit.
   3. Store the indoor resilient athletic surfacing rolls in an upright position on a smooth flat surface immediately upon delivery to jobsite.
   4. Rolls shipped in rigid protective cardboard containers can be laid horizontally prior to unpacking and installation.

1.5 *PROJECT/SITE CONDITIONS*

A. It is the responsibility of the general contractor/construction manager to maintain project/site conditions acceptable for the installation of the indoor resilient multipurpose flooring.

B. The area in which the indoor resilient multipurpose surfacing will be installed shall be dry and weather tight. Permanent heat, light and ventilation shall be installed and operable.

C. All other trades shall have completed their work prior to the installation of the resilient athletic flooring. The general contractor or construction manager shall maintain a secure and clean working environment before, during and after the installation.

D. Maintain a stable room temperature of at least 65°F for a minimum of one (1) week prior to, during and thereafter installation.

E. An effective low-permeance vapor barrier is placed directly beneath the concrete subfloor. For "on" or "below grade" installations, it is recommended to provide a permanent vapor barrier resistant to long term hydrostatic pressure/moisture exposure. Protrusions should be sealed to prevent moisture migration into the slab. Moisture should not be allowed to enter the slab after the completed construction.

F. Concrete subfloor surface pH level within the 7 to 11 range dependent upon installation type.

G. Concrete subfloor should be no greater than 1/8" within a 10 ft diameter. This tolerance can be measured in accordance with ASTM E1155. A specified (F_F) of 50 and an (F_L) of 30 should reach this degree of floor flatness and floor level. There is no numerical correlation between F numbers and the deviation from the straight

edge. However, the above specified numbers should achieve a flat floor with minimal deviation in the slab. Reference ACI 117 and ACI 302.1R. The general contractor should provide a certificate of compliance with the above recommendations.

H. Concrete subfloor must be clean and free of all foreign materials or objects including, but not limited to, curing compounds and sealers.

I. Fill cracks, grooves, voids, depressions, and other minor imperfections. Follow the manufacturer's directions. Moveable joints must be treated utilizing specific transitioning joint devices depending upon the architect's recommendations. Follow current ASTM F710 guidelines for the preparation of concrete slabs to receive resilient flooring.

J. Refer to ACI 302.2R "Guidelines for Concrete Slabs that Receive Moisture-Sensitive Flooring Materials" for concrete design and construction.

K. Concrete slab shall be fortified with continual steel reinforcement. Fiber reinforcement alone shall not be considered adequate fortification.

1.6 *WARRANTY*

A. Special Limited Warranty:
   1. Manufacturer's standard form in which manufacturer agrees to repair or replace sports flooring including labor that fails within specified warranty period.

B. Material warranty must be direct from the product manufacturer.
   1. Material warranties must come from original manufacturer or division thereof. Private label warranties from distributors or brokers are not valid. Supply original point of manufacturing upon request.

C. Failures include, but are not limited to, the following:
   1. Material manufacturing defects.
   2. Surface wear and deterioration to the point of wear-through of wear layer per ASTM F410/ASTM F1303.
   3. Failure due to substrate moisture exposure exceeding 98 percent relative humidity when tested according to ASTM F2170.

D. Warranty Period:
   1. <u>For material defects and surface wear-through:</u> **15** years from date of substantial completion.
   2. <u>For moisture vapor tolerance:</u> **15** years from date of substantial completion.

E. Installer's Limited Warranty:
   1. Installer's standard form in which installer agrees to repair or replace sports flooring that fails due to poor workmanship or faulty installation within the specified warranty period.
   2. Warranty Period: 2 years from date of substantial completion.

1.7 *ADDITIONAL MATERIALS*

A. Furnish to the owner additional materials containing a total of at least 1% of each different color or design of the indoor resilient athletic surfacing used on the project.

1.8 *LEED™ CERTIFICATION*

A. The indoor resilient athletic surfacing should be able to help this facility to achieve points towards *LEED™ certification.*
B. LEED categories positively affected by the indoor resilient athletic surfacing:

LEED™ V4 Credit		Contribution
Materials & Resources: Building Product Disclosure & Optimization (BPDO)		
MRc3: Sourcing of Raw Materials	Options 1 & 2	2 Points
MRc4: Material Ingredients	Option 1	1 Point
MRc5: Construction and Demolition Management	Reclamation and Recycling	ReStart® Program

PART 2 - PRODUCTS

2.1 *MANUFACTURERS*

A. The basis of the design for the indoor resilient multipurpose surfacing is Omnisports HPL 9 mm as manufactured by Tarkett.
B. All other installation accessories and related components must be either made or approved by the indoor resilient athletic surfacing manufacturer.
C. Other products may be approved as equal if deemed qualified and submitted in accordance with the General Conditions.
D. Test reports confirming compliance from an independent sports laboratory must be provided along with samples, technical data, installation, maintenance, and warranty prior to acceptance as an alternative product.

2.2 *MATERIALS*

A. Omnisports HPL 9 mm - Prefabricated sport surface with wood flooring design and slightly textured embossed surface as supplied by Tarkett.
   1. Embossing of wood design and solid colors must be the same; varying embossing or surface textures will not be allowed.
   2. Printing of wood design shall closely resemble standard wood strip flooring in size, color, board length, and grain appearance.
   3. The wood design shall be protected by a clear layer of pure PVC (Polyvinyl Chloride) and TopClean xp, a factory-applied UV cured urethane treatment.
   4. Intermediate layers shall be fortified with a non-woven fiberglass grid for increased dimensional stability.
   5. A high density load resistant underlayment, field constructed and installed per manufacturer's construction specifications incorporated to provide higher load resistance.

B. Physical properties of the indoor resilient athletic surfacing shall conform to the following minimums:

Width	Omnisports	6′ 6″ (2 m)
Length	Omnisports	85′ (25.9m) approx.
Wear Layer	Omnisports	2 mm
Total Thickness	Omnisports HPL	9 mm (7 + 2)
High Density Underlayment	ASTM D297	0.67 g/cm^3
Tear Strength	ASTM D412	410-425 min. Die C
Elongation	ASTM D412	120-125 min. Die C
Static Load	ASTM F970	500 psi
Reaction to Fire	ASTM E648	Class 1
Specular Gloss	EN ISO 2813	13%
Wear Layer	Type 1, Grade 1	ASTM F1303/F410
Taber Abrasion	ASTM D3389	0.02 g (1000 cycles)
Stain Resistance	ASTM F925	Excellent
Moisture Tolerance with Multi-Poxy	ASTM F2170	98% RH
Vertical Deformation	PASSED	ASTM F2772
Surface Finish Effect	PASSED	ASTM F2772 (80 - 100)
Ball Rebound	PASSED	ASTM F2772 >90%
Force Reduction	PASSED	ASTM F2772 Class 2
Phthalate-free technology	—	YES
REACH Compliant	—	YES
Heavy Metals	—	NO
ISO 9001	—	YES
ISO 14001	—	YES

1. Color: As available from the indoor resilient athletic surfacing manufacturer's standard range.
2. Hardwood Design Series: High definition printing for a realistic wood surface appearance as available from the indoor resilient athletic surfacing manufacturer's standard range.
3. Texture: Texture to remain consistent between solid colors and wood design when blending colors.

C. Welding Rod: As supplied by the indoor resilient athletic surfacing manufacturer or supplier.
   1. Color to blend with the indoor resilient athletic surfacing color or design.
   2. All seams shall be welded to create a monolithic and impermeable surface.

D. Adhesive: As approved by the indoor resilient athletic surfacing manufacturer.

E. Game Line Paint and Primer: As approved by the indoor resilient athletic surfacing manufacturer.

PART 3 - EXECUTION

3.1 *EXAMINATION*

A. It is the responsibility of the general contractor/construction manager to ensure that project/site conditions are acceptable for the installation of the indoor resilient athletic flooring.
B. Verify that the area in which the indoor resilient athletic surfacing will be installed is dry and weather tight. Verify that permanent heat, light and ventilation are installed and operable.
C. Verify that all other work that could cause damage, dirt and dust or interrupt the normal pace of the indoor resilient athletic flooring installation is completed or suspended.
D. Verify that there is a stable room temperature of at least 65◦F.
E. Verify that there are no foreign materials or objects on the subfloor and that the subfloor is clean and ready for installation.
F. *Direct Full Spread Adhering to Concrete Subfloor Multi-Poxy : moisture content less than 98% RH when tested per ASTM F2170.*
G. Follow Fieldturf USA, Inc. installation recommendations.
H. Do not average the results of the tests. Report all field test results in writing to the General Contractor, Architect, and End User prior to installation.
I. Verify that the concrete subfloor surface pH level is within the 7 - 11 range.
J. Document the results confirming the slab is within manufacturer's tolerances for slab deviation.

3.2 *PREPARATION OF SURFACES*

A. Sand the entire surface of the concrete slab.
B. Sweep the concrete slab so as to remove all dirt and dust. If a sweeping compound is to be used it must be a sweeping compound that does not contain oil or other items that may inhibit the adhesive bond.
C. Slab must be dust free. In the event that dust impairs adhesive bond, priming the slab prior to application of adhesive may be necessary. Follow installation guidelines.
D. Follow OSHA guidelines.

3.3 *INSTALLATION*

A. The installation area shall be closed to all traffic and activity for a period to be set by the indoor resilient athletic surfacing installer. The indoor resilient athletic surfacing installation shall not begin until the installer is familiar with the existing conditions.
B. All necessary precautions should be taken to minimize noise, smell, dust, the use of hazardous materials and any other items that may inconvenience others.
C. Install the indoor resilient athletic surfacing in strict accordance with the indoor resilient athletic surfacing manufacturer's written instructions.
D. Install the indoor resilient athletic surfacing minimizing cross seams. Provide a seam diagram during the submittal process for approval prior to installation. Vinyl Sheet Flooring Seams: Comply with ASTM F 1516. Rout joints and heat weld to permanently and seamlessly fuse sections together.
E. Paint game lines using approved game line paint primer and game line paint in strict accordance with the game line paint manufacturer's instructions.
F. Install appropriate threshold plates or transition strips where necessary.

3.5 *CLEANING*

A. Remove all unused materials, tools, and equipment and dispose of any debris properly. Clean the indoor resilient athletic surfacing in accordance with the manufacturer's instructions.

3.6 *PROTECTION*

A. If required, protect the indoor resilient athletic surfacing from damage using coverings approved by the manufacturer until acceptance of work by the customer or their authorized representative.

3.7 *RELATED STANDARDS AND GUIDELINES*

A. ASTM F2170 "Standard Test Method for Determining Relative Humidity In Concrete Floor Slabs Using In-Situ Probes"
B. ASTM F710 "Standard Practice for Preparing Concrete Floors to Receive Resilient Flooring"
C. ACI 302.2R-06 "Guideline for Concrete Slabs that Receive Moisture-Sensitive Flooring Materials"
D. ASTM F2772-11 "Standard Specification for Athletic Performance Properties of Indoor Sports Floor Systems"

END OF SECTION

SECTION 09 65 66
ARCHITECTURAL SPECIFICATIONS FOR INDOOR RESILIENT ATHLETIC SURFACING

PART 1 – GENERAL

1.1 *SECTION INCLUDES*

A. Supply and installation of the indoor resilient multipurpose surfacing
B. Application of the game lines
C. References for the correct construction and preparation of concrete slabs to receive resilient flooring.

1.2 *SUBMITTALS*

A. Product Data:
   1. Manufacturer's promotional brochures, specifications and installation instructions
B. Manufacturer Certifications:
   1. Provide certification that accurately identifies the Original Equipment Manufacturer (OEM) of flooring furnished for this project including manufacturer's name, address and factory location.
   2. Suppliers of private label flooring for this project must identify themselves as such and fully disclose the OEM information listed above.
   3. All "manufacturer" requirements in these specifications must be complied with by the OEM, including warranties, certifications, qualifications, product data, test results, environmental requirements, performance data, etc.
C. Samples:
   1. Submit for selection and approval three (3) sets of the indoor resilient multipurpose surfacing, manufacturer's brochures, samples or sample boards of all of the available colors, textures and styles.
   2. Submit color samples of all the available game line paint colors for selection and approval.
D. Closeout Submittals:
   1. Submit three (3) copies of the indoor resilient multipurpose surfacing and manufacturer's maintenance instructions.
   2. Submit three (3) copies of the material and installation warranties as specified.

1.3 *QUALITY ASSURANCE*

A. Qualifications:
   1. The indoor resilient multipurpose surfacing shall have been actively marketed for a minimum of ten (10) years.
   2. The indoor resilient multipurpose surfacing shall be manufactured in an ISO 9001 certified plant.
   3. The indoor resilient multipurpose surfacing shall be manufactured in an ISO 14001 certified plant.
   4. The indoor resilient multipurpose surfacing supplier shall be an established firm, experienced in the field, and competent in the techniques required by the manufacturer.
   5. The installer of the indoor resilient multipurpose surfacing shall have a minimum of five (5) years of experience in the field installing indoor resilient multipurpose surfacing and have worked on at least five (5) projects of similar size, type and complexity.

B. Certifications:
   1. Installer to submit the indoor resilient athletic surfacing manufacturer's or distributor's certification attesting that they are an approved installer of the indoor resilient multipurpose surfacing.
   2. The ind**o**or resilient multipurpose surfacing manufacturer to submit official ISO 9001 certification for the facility in which the indoor resilient multipurpose surfacing is manufactured.

C. Testing:
   Tests shall be relative for multi-purpose use with certificates from independent testing resources to be made available upon request. Test results shall be performed according to ASTM standard testing procedures including ASTM F2772 "Standard Specification for Athletic Performance Properties of Indoor Sports Floor Systems".

1.4 *DELIVERY, STORAGE AND HANDLING*

A. Delivery:
   Material shall not be delivered until all related work is in place and finished and/or proper storage facilities and conditions can be provided and guaranteed stable according to FieldTurf USA, Inc. recommendations.

B. Storage:
   1. Store the material in a secure, clean and dry location.
   2. Maintain temperature between 55° and 85° Fahrenheit.
   3. Store the indoor resilient athletic surfacing rolls in an upright position on a smooth flat surface immediately upon delivery to jobsite.
   4. Rolls shipped in rigid protective cardboard containers can be laid horizontally prior to unpacking and installation.

1.5 *PROJECT/SITE CONDITIONS*

A. It is the responsibility of the general contractor/construction manager to maintain project/site conditions acceptable for the installation of the indoor resilient multipurpose flooring.

B. The area in which the indoor resilient multipurpose surfacing will be installed shall be dry and weather tight. Permanent heat, light and ventilation shall be installed and operable.

C. All other trades shall have completed their work prior to the installation of the resilient athletic flooring. The general contractor or construction manager shall maintain a secure and clean working environment before, during and after the installation.

D. Maintain a stable room temperature of at least 65°F for a minimum of one (1) week prior to, during and thereafter installation.

E. An effective low-permeance vapor barrier is placed directly beneath the concrete subfloor. For "on" or "below grade" installations, it is recommended to provide a permanent vapor barrier resistant to long term hydrostatic pressure/moisture exposure. Protrusions should be sealed to prevent moisture migration into the slab. Moisture should not be allowed to enter the slab after the completed construction.

F. Concrete subfloor surface pH level within the 7 to 10 range dependent upon installation type.

G. Concrete subfloor should be no greater than 1/8" within a 10 ft diameter. This tolerance can be measured in accordance with ASTM E1155. A specified (F_F) of 50 and an (F_L) of 30 should reach this degree of floor flatness and floor level. There is no numerical correlation between F numbers and the deviation from the straight

edge. However, the above specified numbers should achieve a flat floor with minimal deviation in the slab. Reference ACI 117 and ACI 302.1R. The general contractor should provide a certificate of compliance with the above recommendations.

H. Concrete subfloor must be clean and free of all foreign materials or objects including, but not limited to, curing compounds and sealers.

I. Fill cracks, grooves, voids, depressions, and other minor imperfections. Follow the manufacturer's directions. Moveable joints must be treated utilizing specific transitioning joint devices depending upon the architect's recommendations. Follow current ASTM F710 guidelines for the preparation of concrete slabs to receive resilient flooring.

J. Refer to ACI 302.2R "Guidelines for Concrete Slabs that Receive Moisture-Sensitive Flooring Materials" for concrete design and construction.

K. Concrete slab shall be fortified with continual steel reinforcement. Fiber reinforcement alone shall not be considered adequate fortification.

1.6 *WARRANTY*

A. Special Limited Warranty:
   1. Manufacturer's standard form in which manufacturer agrees to repair or replace sports flooring including labor that fails within specified warranty period.

B. Material warranty must be direct from the product manufacturer.
   1. Material warranties must come from original manufacturer or division thereof. Private label warranties from distributors or brokers are not valid. Supply original point of manufacturing upon request.

C. Failures include, but are not limited to, the following:
   1. Material manufacturing defects.
   2. Surface wear and deterioration to the point of wear-through of wear layer per ASTM F410/ASTM F1303.
   3. Failure due to substrate moisture exposure exceeding 98 percent relative humidity when tested according to ASTM F2170.

D. Warranty Period:
   1. <u>For material defects and surface wear-through:</u> **25** years from date of substantial completion.
   2. <u>For moisture vapor tolerance:</u> **25** years from date of substantial completion.

E. Installer's Limited Warranty:
   1. Installer's standard form in which installer agrees to repair or replace sports flooring that fails due to poor workmanship or faulty installation within the specified warranty period.
   2. Warranty Period: 2 years from date of substantial completion.

1.7 *ADDITIONAL MATERIALS*

A. Furnish to the owner additional materials containing a total of at least 1% of each different color or design of the indoor resilient athletic surfacing used on the project.

1.8 *LEED™ CERTIFICATION*

A. The indoor resilient athletic surfacing should be able to help this facility to achieve points towards *LEED™ certification.* Flooring system must be certified by FloorScore.
B. LEED categories positively affected by the indoor resilient athletic surfacing:

LEED™ V4 Credit		Contribution
Materials & Resources: Building Product Disclosure & Optimization (BPDO)		
MRc3: Sourcing of Raw Materials	Options 1 & 2	2 Points
MRc4: Material Ingredients	Option 1	1 Point
MRc5: Construction and Demolition Management	Reclamation and Recycling	ReStart® Program
Indoor Environmental Quality		
EQc2: Low-Emitting Materials	TVOC: 0.5 mg/m3 or less	FloorScore®

PART 2 - PRODUCTS

2.1 *MANUFACTURERS*

A. The basis of the design for the indoor resilient multipurpose surfacing is Omnisports Multi-Use as manufactured by Tarkett.
B. All other installation accessories and related components must be either made or approved by the indoor resilient athletic surfacing manufacturer.
C. Other products may be approved as equal if deemed qualified and submitted in accordance with the General Conditions.
D. Test reports confirming compliance from an independent sports laboratory must be provided along with samples, technical data, installation, maintenance, and warranty prior to acceptance as an alternative product.

2.2 *MATERIALS*

A. Omnisports Multi-Use - Prefabricated sport surface 6.2 mm (0.14″) with wood flooring design, single surface embossing and Extreme Three (3) Layers technology (X3LT) as supplied by Tarkett.
   1. Embossing of wood design and solid colors must be the same; varying embossing or surface textures will not be allowed.
   2. Printing of wood design shall closely resemble standard wood strip flooring in size, color, board length, and grain appearance.
   3. Surface embossing combined with TopClean XP must offer proper balance of surface friction per the ASTM F2772.
   4. Surface embossing combined with TopClean XP must provide resistance to stains and scratches. Surface profile must not incorporate linear embossing.
   5. The wood design shall be protected by a clear layer of pure PVC (Polyvinyl Chloride) and TopClean XP, a factory-applied UV cured urethane treatment.
   6. Extreme Three (3) Layers technology (X3LT) includes Omnisports XCS cushion, glass veil and calendared sheet must offer improved shock absorbing comfort while providing better indentation recovery

7. The XCS cushion force reduction layer shall be high-density closed cell PVC foam with honeycomb embossing, and is applied in one continuous manufacturing process.
8. Laminated or adhered foam layers will not be allowed.
9. Field constructed products will not be accepted.

A. Physical properties of the indoor resilient athletic surfacing shall conform to the following minimums:

Width	—	6′ 5″ (2 m)
Length	—	85′ (26 m) approx.
Wear Layer	—	2 mm
Total Thickness	—	6.2 mm
Wear Layer	Type 1– Grade 1	ASTM F1303/F410
Vertical Deformation	PASSED	ASTM F2772
Rolling Load	PASSED	≤0.50 mm (EN 1569 {11/1999})
Surface Finish Effect	PASSED	ASTM F2772 (80 – 110)
Chemical Resistance	Excellent	ASTM F925
Impact Resistance	PASSED	EN 1717
Abrasion Resistance	PASSED	0.10 (EN ISO 5470-1 {06/1999})
Static Load Limit	PASSED	ASTM F970- Load 175 Lbs
Sound Insulation	Excellent	+/= 19 dB (ISO 717/2)
In-Room Sound Insulation	Excellent	65dB (NF S31-074)
Ball Rebound	PASSED	ASTM F2772 > 90%
Force Reduction	PASSED	ASTM F2772 Class 2
Fire Rating	PASSED	ASTM E648 Class 1
Microbial Assays Test	No Growth	G21 ASTM - Backing
Asthma and Allergy Friendly™	ASP: 05-01/101	Certified Compliant
VOC	<10µg/m³	ASTM D5116 (small chamber)
Phthalate-free technology	—	YES
REACH Compliant	—	YES
Heavy Metals	—	NO
ISO 9001	—	YES
ISO 14001	—	YES

1. Color: As available from the indoor resilient athletic surfacing manufacturer's standard range.
2. Hardwood Design Series: High definition printing for a realistic wood surface appearance as available from the indoor resilient athletic surfacing manufacturer's standard range.
3. Texture: Texture to remain consistent between solid colors and wood design when blending colors.

C. Welding Rod: As supplied by the indoor resilient athletic surfacing manufacturer or supplier.
1. Color to blend with the indoor resilient athletic surfacing color or design.
2. All seams shall be welded to create a monolithic and impermeable surface.

D. Adhesive: As approved by the indoor resilient athletic surfacing manufacturer.
E. Game Line Paint and Primer: As approved by the indoor resilient athletic surfacing manufacturer.

PART 3 - EXECUTION

3.1 *EXAMINATION*

A. It is the responsibility of the general contractor/construction manager to ensure that project/site conditions are acceptable for the installation of the indoor resilient athletic flooring.
B. Verify that the area in which the indoor resilient athletic surfacing will be installed is dry and weather tight. Verify that permanent heat, light and ventilation are installed and operable.
C. Verify that all other work that could cause damage, dirt and dust or interrupt the normal pace of the indoor resilient athletic flooring installation is completed or suspended.
D. Verify that there is a stable room temperature of at least 65◦F.
E. Verify that there are no foreign materials or objects on the subfloor and that the subfloor is clean and ready for installation.
F. *For GreenLay™ Installation to Concrete Subfloor: moisture content less than 92% RH when tested per ASTM F2170.*
G. Follow Fieldturf USA, Inc. installation recommendations.
H. Do not average the results of the tests. Report all field test results in writing to the General Contractor, Architect, and End User prior to installation.
I. Verify that the concrete subfloor surface pH level is within the 7 - 10 range.
J. Document the results confirming the slab is within manufacturer's tolerances for slab deviation.

3.2 *PREPARATION OF SURFACES*

A. Sand the entire surface of the concrete slab.
B. Sweep the concrete slab so as to remove all dirt and dust. If a sweeping compound is to be used it must be a sweeping compound that does not contain oil or other items that may inhibit the adhesive bond.
C. Slab must be dust free. In the event that dust impairs adhesive bond, priming the slab prior to application of adhesive may be necessary. Follow installation guidelines.
D. Follow OSHA guidelines

3.3 *INSTALLATION*

A. The installation area shall be closed to all traffic and activity for a period to be set by the indoor resilient athletic surfacing installer. The indoor resilient athletic surfacing installation shall not begin until the installer is familiar with the existing conditions.
B. All necessary precautions should be taken to minimize noise, smell, dust, the use of hazardous materials and any other items that may inconvenience others.
C. Install the indoor resilient athletic surfacing in strict accordance with the indoor resilient athletic surfacing manufacturer's written instructions.
D. Install the indoor resilient athletic surfacing minimizing cross seams. Provide a seam diagram during the submittal process for approval prior to installation. Vinyl Sheet Flooring Seams: Comply with ASTM F 1516. Rout joints and heat weld to permanently and seamlessly fuse sections together.
E. Paint game lines using approved game line paint primer and game line paint in strict accordance with the game line paint manufacturer's instructions.
F. Install appropriate threshold plates or transition strips where necessary.

3.5 *CLEANING*

A. Remove all unused materials, tools, and equipment and dispose of any debris properly. Clean the indoor resilient athletic surfacing in accordance with the manufacturer's instructions.

3.6 *PROTECTION*

A. If required, protect the indoor resilient athletic surfacing from damage using coverings approved by the manufacturer until acceptance of work by the customer or their authorized representative.

3.7 *RELATED STANDARDS AND GUIDELINES*

A. ASTM F2170 "Standard Test Method for Determining Relative Humidity In Concrete Floor Slabs Using In-Situ Probes"
B. ASTM F710 "Standard Practice for Preparing Concrete Floors to Receive Resilient Flooring"
C. ACI 302.2R-06 "Guideline for Concrete Slabs that Receive Moisture-Sensitive Flooring Materials"
D. ASTM F2772-11 "Standard Specification for Athletic Performance Properties of Indoor Sports Floor Systems"

END OF SECTION

SECTION 09 65 66
ARCHITECTURAL SPECIFICATIONS FOR INDOOR RESILIENT ATHLETIC SURFACING

PART 1 – GENERAL

1.1 *SECTION INCLUDES*

A. Supply and installation of the indoor resilient multipurpose surfacing
B. Application of the game lines
C. References for the correct construction and preparation of concrete slabs to receive resilient flooring.

1.2 *SUBMITTALS*

A. Product Data:
   1. Manufacturer's promotional brochures, specifications and installation instructions
B. Manufacturer Certifications:
   1. Provide certification that accurately identifies the Original Equipment Manufacturer (OEM) of flooring furnished for this project including manufacturer's name, address and factory location.
   2. Suppliers of private label flooring for this project must identify themselves as such and fully disclose the OEM information listed above.
   3. All "manufacturer" requirements in these specifications must be complied with by the OEM, including warranties, certifications, qualifications, product data, test results, environmental requirements, performance data, etc.
C. Samples:
   1. Submit for selection and approval three (3) sets of the indoor resilient multipurpose surfacing, manufacturer's brochures, samples or sample boards of all of the available colors, textures and styles.
   2. Submit color samples of all the available game line paint colors for selection and approval.
D. Closeout Submittals:
   1. Submit three (3) copies of the indoor resilient multipurpose surfacing and manufacturer's maintenance instructions.
   2. Submit three (3) copies of the material and installation warranties as specified.

1.3 *QUALITY ASSURANCE*

A. Qualifications:
   1. The indoor resilient multipurpose surfacing shall have been actively marketed for a minimum of ten (10) years.
   2. The indoor resilient multipurpose surfacing shall be manufactured in an ISO 9001 certified plant.
   3. The indoor resilient multipurpose surfacing shall be manufactured in an ISO 14001 certified plant.
   4. The indoor resilient multipurpose surfacing supplier shall be an established firm, experienced in the field, and competent in the techniques required by the manufacturer.
   5. The installer of the indoor resilient multipurpose surfacing shall have a minimum of five (5) years of experience in the field installing indoor resilient multipurpose surfacing and have worked on at least five (5) projects of similar size, type and complexity.

B. Certifications:
   1. Installer to submit the indoor resilient athletic surfacing manufacturer's or distributor's certification attesting that they are an approved installer of the indoor resilient multipurpose surfacing.
   2. The ind**o**or resilient multipurpose surfacing manufacturer to submit official ISO 9001 certification for the facility in which the indoor resilient multipurpose surfacing is manufactured.

C. Testing:
   Tests shall be relative for multi-purpose use with certificates from independent testing resources to be made available upon request. Test results shall be performed according to ASTM standard testing procedures including ASTM F2772 "Standard Specification for Athletic Performance Properties of Indoor Sports Floor Systems".

1.4 *DELIVERY, STORAGE AND HANDLING*

A. Delivery:
   Material shall not be delivered until all related work is in place and finished and/or proper storage facilities and conditions can be provided and guaranteed stable according to FieldTurf USA, Inc. recommendations.

B. Storage:
   1. Store the material in a secure, clean and dry location.
   2. Maintain temperature between 55° and 85° Fahrenheit.
   3. Store the indoor resilient athletic surfacing rolls in an upright position on a smooth flat surface immediately upon delivery to jobsite.
   4. Rolls shipped in rigid protective cardboard containers can be laid horizontally prior to unpacking and installation.

1.5 *PROJECT/SITE CONDITIONS*

A. It is the responsibility of the general contractor/construction manager to maintain project/site conditions acceptable for the installation of the indoor resilient multipurpose flooring.

B. The area in which the indoor resilient multipurpose surfacing will be installed shall be dry and weather tight. Permanent heat, light and ventilation shall be installed and operable.

C. All other trades shall have completed their work prior to the installation of the resilient athletic flooring. The general contractor or construction manager shall maintain a secure and clean working environment before, during and after the installation.

D. Maintain a stable room temperature of at least 65°F for a minimum of one (1) week prior to, during and thereafter installation.

E. An effective low-permeance vapor barrier is placed directly beneath the concrete subfloor. For "on" or "below grade" installations, it is recommended to provide a permanent vapor barrier resistant to long term hydrostatic pressure/moisture exposure. Protrusions should be sealed to prevent moisture migration into the slab. Moisture should not be allowed to enter the slab after the completed construction.

F. Concrete subfloor surface pH level within the 7 to 10 range dependent upon installation type.

G. Concrete subfloor should be no greater than 1/8" within a 10 ft diameter. This tolerance can be measured in accordance with ASTM E1155. A specified (F_F) of 50 and an (F_L) of 30 should reach this degree of floor flatness and floor level. There is no numerical correlation between F numbers and the deviation from the straight

edge. However, the above specified numbers should achieve a flat floor with minimal deviation in the slab. Reference ACI 117 and ACI 302.1R. The general contractor should provide a certificate of compliance with the above recommendations.

H. Concrete subfloor must be clean and free of all foreign materials or objects including, but not limited to, curing compounds and sealers.

I. Fill cracks, grooves, voids, depressions, and other minor imperfections. Follow the manufacturer's directions. Moveable joints must be treated utilizing specific transitioning joint devices depending upon the architect's recommendations. Follow current ASTM F710 guidelines for the preparation of concrete slabs to receive resilient flooring.

J. Refer to ACI 302.2R "Guidelines for Concrete Slabs that Receive Moisture-Sensitive Flooring Materials" for concrete design and construction.

K. Concrete slab shall be fortified with continual steel reinforcement. Fiber reinforcement alone shall not be considered adequate fortification.

1.6 *WARRANTY*

A. Special Limited Warranty:
   1. Manufacturer's standard form in which manufacturer agrees to repair or replace sports flooring including labor that fails within specified warranty period.

B. Material warranty must be direct from the product manufacturer.
   1. Material warranties must come from original manufacturer or division thereof. Private label warranties from distributors or brokers are not valid. Supply original point of manufacturing upon request.

C. Failures include, but are not limited to, the following:
   1. Material manufacturing defects.
   2. Surface wear and deterioration to the point of wear-through of wear layer per ASTM F410/ASTM F1303.
   3. Failure due to substrate moisture exposure exceeding 98 percent relative humidity when tested according to ASTM F2170.

D. Warranty Period:
   1. <u>For material defects and surface wear-through:</u> **25** years from date of substantial completion.
   2. <u>For moisture vapor tolerance:</u> **25** years from date of substantial completion.

E. Installer's Limited Warranty:
   1. Installer's standard form in which installer agrees to repair or replace sports flooring that fails due to poor workmanship or faulty installation within the specified warranty period.
   2. Warranty Period: 2 years from date of substantial completion.

1.7 *ADDITIONAL MATERIALS*

A. Furnish to the owner additional materials containing a total of at least 1% of each different color or design of the indoor resilient athletic surfacing used on the project.

1.8 *LEED™ CERTIFICATION*

A. The indoor resilient athletic surfacing should be able to help this facility to achieve points towards *LEED™ certification.* Flooring system must be certified by FloorScore.
B. LEED categories positively affected by the indoor resilient athletic surfacing:

LEED™ V4 Credit		Contribution
Materials & Resources: Building Product Disclosure & Optimization (BPDO)		
MRc3: Sourcing of Raw Materials	Options 1 & 2	2 Points
MRc4: Material Ingredients	Option 1	1 Point
MRc5: Construction and Demolition Management	Reclamation and Recycling	ReStart® Program
Indoor Environmental Quality		
EQc2: Low-Emitting Materials	TVOC: 0.5 mg/m3 or less	FloorScore®

PART 2 - PRODUCTS

2.1 *MANUFACTURERS*

A. The basis of the design for the indoor resilient multipurpose surfacing is Omnisports Multi-Use as manufactured by Tarkett.
B. All other installation accessories and related components must be either made or approved by the indoor resilient athletic surfacing manufacturer.
C. Other products may be approved as equal if deemed qualified and submitted in accordance with the General Conditions.
D. Test reports confirming compliance from an independent sports laboratory must be provided along with samples, technical data, installation, maintenance, and warranty prior to acceptance as an alternative product.

2.2 *MATERIALS*

A. Omnisports Multi-Use - Prefabricated sport surface 6.2 mm (0.14″) with wood flooring design, single surface embossing and Extreme Three (3) Layers technology (X3LT) as supplied by Tarkett.
   1. Embossing of wood design and solid colors must be the same; varying embossing or surface textures will not be allowed.
   2. Printing of wood design shall closely resemble standard wood strip flooring in size, color, board length, and grain appearance.
   3. Surface embossing combined with TopClean XP must offer proper balance of surface friction per the ASTM F2772.
   4. Surface embossing combined with TopClean XP must provide resistance to stains and scratches. Surface profile must not incorporate linear embossing.
   5. The wood design shall be protected by a clear layer of pure PVC (Polyvinyl Chloride) and TopClean XP, a factory-applied UV cured urethane treatment.
   6. Extreme Three (3) Layers technology (X3LT) includes Omnisports XCS cushion, glass veil and calendared sheet must offer improved shock absorbing comfort while providing better indentation recovery

7. The XCS cushion force reduction layer shall be high-density closed cell PVC foam with honeycomb embossing, and is applied in one continuous manufacturing process.
8. Laminated or adhered foam layers will not be allowed.
9. Field constructed products will not be accepted.

A. Physical properties of the indoor resilient athletic surfacing shall conform to the following minimums:

Width	—	6′ 6″ (2 m)
Length	—	85′ (25.9m) approx.
Wear Layer	—	2 mm
Total Thickness	—	6.2 mm
Wear Layer	Type 1– Grade 1	ASTM F1303/F410
Vertical Deformation	PASSED	ASTM F2772
Rolling Load	PASSED	≤0.50 mm (EN 1569 {11/1999})
Surface Finish Effect	PASSED	ASTM F2772 (80 – 110)
Chemical Resistance	Excellent	ASTM F925
Impact Resistance	PASSED	EN 1717
Abrasion Resistance	PASSED	0.10 (EN ISO 5470-1 {06/1999})
Static Load Limit	PASSED	ASTM F970- Load 175 Lbs
Sound Insulation	Excellent	+/= 19 dB (ISO 717/2)
In-Room Sound Insulation	Excellent	65dB (NF S31-074)
Ball Rebound	PASSED	ASTM F2772 > 90%
Force Reduction	PASSED	ASTM F2772 Class 2
Fire Rating	PASSED	ASTM E648 Class 1
Microbial Assays Test	No Growth	G21 ASTM - Backing
Asthma and Allergy Friendly™	ASP: 05-01/101	Certified Compliant
VOC	<10µg/m³	ASTM D5116 (small chamber)
Phthalate-free technology	—	YES
REACH Compliant	—	YES
Heavy Metals	—	NO
ISO 9001	—	YES
ISO 14001	—	YES

1. Color: As available from the indoor resilient athletic surfacing manufacturer's standard range.
2. Hardwood Design Series: High definition printing for a realistic wood surface appearance as available from the indoor resilient athletic surfacing manufacturer's standard range.
3. Texture: Texture to remain consistent between solid colors and wood design when blending colors.

C. Welding Rod: As supplied by the indoor resilient athletic surfacing manufacturer or supplier.
   1. Color to blend with the indoor resilient athletic surfacing color or design.
   2. All seams shall be welded to create a monolithic and impermeable surface.

D. Adhesive: As approved by the indoor resilient athletic surfacing manufacturer.

E. Game Line Paint and Primer: As approved by the indoor resilient athletic surfacing manufacturer.

PART 3 - EXECUTION

3.1 *EXAMINATION*

A. It is the responsibility of the general contractor/construction manager to ensure that project/site conditions are acceptable for the installation of the indoor resilient athletic flooring.
B. Verify that the area in which the indoor resilient athletic surfacing will be installed is dry and weather tight. Verify that permanent heat, light and ventilation are installed and operable.
C. Verify that all other work that could cause damage, dirt and dust or interrupt the normal pace of the indoor resilient athletic flooring installation is completed or suspended.
D. Verify that there is a stable room temperature of at least 65◦F.
E. Verify that there are no foreign materials or objects on the subfloor and that the subfloor is clean and ready for installation.
F. *Direct Full Spread Adhering to Concrete Subfloor HS Sports Spray : moisture content less than 90% RH when tested per ASTM F2170.*
G. Follow Fieldturf USA, Inc installation recommendations.
H. Do not average the results of the tests. Report all field test results in writing to the General Contractor, Architect, and End User prior to installation.
I. Verify that the concrete subfloor surface pH level is within the 7 - 10 range.
J. Document the results indicating the slab is within manufacturer's tolerances for slab deviation.

3.2 *PREPARATION OF SURFACES*

A. Sand the entire surface of the concrete slab.
B. Sweep the concrete slab so as to remove all dirt and dust. If a sweeping compound is to be used it must be a sweeping compound that does not contain oil or other items that may inhibit the adhesive bond.
C. Slab must be dust free. In the event that dust impairs adhesive bond, priming the slab prior to application of adhesive may be necessary. Follow installation guidelines.

3.3 *INSTALLATION*

A. The installation area shall be closed to all traffic and activity for a period to be set by the indoor resilient athletic surfacing installer. The indoor resilient athletic surfacing installation shall not begin until the installer is familiar with the existing conditions.
B. All necessary precautions should be taken to minimize noise, smell, dust, the use of hazardous materials and any other items that may inconvenience others.
C. Install the indoor resilient athletic surfacing in strict accordance with the indoor resilient athletic surfacing manufacturer's written instructions.
D. Install the indoor resilient athletic surfacing minimizing cross seams. Provide a seam diagram during the submittal process for approval prior to installation. Vinyl Sheet Flooring Seams: Comply with ASTM F 1516. Rout joints and heat weld to permanently and seamlessly fuse sections together. Apply transitions at doorways as needed.
E. Paint game lines using approved game line paint primer and game line paint in strict accordance with the game line paint manufacturer's instructions.
F. Install appropriate threshold plates or transition strips where necessary.

3.5 *CLEANING*

A. Remove all unused materials, tools, and equipment and dispose of any debris properly. Clean the indoor resilient athletic surfacing in accordance with the manufacturer's instructions.

3.6 *PROTECTION*

A. If required, protect the indoor resilient athletic surfacing from damage using coverings approved by the manufacturer until acceptance of work by the customer or their authorized representative.

3.7 *RELATED STANDARDS AND GUIDELINES*

A. ASTM F2170 "Standard Test Method for Determining Relative Humidity In Concrete Floor Slabs Using In-Situ Probes"
B. ASTM F710 "Standard Practice for Preparing Concrete Floors to Receive Resilient Flooring"
C. ACI 302.2R-06 "Guideline for Concrete Slabs that Receive Moisture-Sensitive Flooring Materials"
D. ASTM F2772-11 "Standard Specification for Athletic Performance Properties of Indoor Sports Floor Systems"

END OF SECTION

SECTION 09 65 66
ARCHITECTURAL SPECIFICATIONS FOR INDOOR RESILIENT ATHLETIC SURFACING

PART 1 – GENERAL

1.1 *SECTION INCLUDES*

A. Supply and installation of the indoor resilient multipurpose surfacing
B. Application of the game lines
C. References for the correct construction and preparation of concrete slabs to receive resilient flooring.

1.2 *SUBMITTALS*

A. Product Data:
   1. Manufacturer's promotional brochures, specifications and installation instructions
B. Manufacturer Certifications:
   1. Provide certification that accurately identifies the Original Equipment Manufacturer (OEM) of flooring furnished for this project including manufacturer's name, address and factory location.
   2. Suppliers of private label flooring for this project must identify themselves as such and fully disclose the OEM information listed above.
   3. All "manufacturer" requirements in these specifications must be complied with by the OEM, including warranties, certifications, qualifications, product data, test results, environmental requirements, performance data, etc.
C. Samples:
   1. Submit for selection and approval three (3) sets of the indoor resilient multipurpose surfacing, manufacturer's brochures, samples or sample boards of all of the available colors, textures and styles.
   2. Submit color samples of all the available game line paint colors for selection and approval.
D. Closeout Submittals:
   1. Submit three (3) copies of the indoor resilient multipurpose surfacing and manufacturer's maintenance instructions.
   2. Submit three (3) copies of the material and installation warranties as specified.

1.3 *QUALITY ASSURANCE*

A. Qualifications:
   1. The indoor resilient multipurpose surfacing shall have been actively marketed for a minimum of ten (10) years.
   2. The indoor resilient multipurpose surfacing shall be manufactured in an ISO 9001 certified plant.
   3. The indoor resilient multipurpose surfacing shall be manufactured in an ISO 14001 certified plant.
   4. The indoor resilient multipurpose surfacing supplier shall be an established firm, experienced in the field, and competent in the techniques required by the manufacturer.
   5. The installer of the indoor resilient multipurpose surfacing shall have a minimum of five (5) years of experience in the field installing indoor resilient multipurpose surfacing and have worked on at least five (5) projects of similar size, type and complexity.

B. Certifications:
   1. Installer to submit the indoor resilient athletic surfacing manufacturer's or distributor's certification attesting that they are an approved installer of the indoor resilient multipurpose surfacing.
   2. The ind**o**or resilient multipurpose surfacing manufacturer to submit official ISO 9001 certification for the facility in which the indoor resilient multipurpose surfacing is manufactured.

C. Testing:
   Tests shall be relative for multi-purpose use with certificates from independent testing resources to be made available upon request. Test results shall be performed according to ASTM standard testing procedures including ASTM F2772 "Standard Specification for Athletic Performance Properties of Indoor Sports Floor Systems".

1.4 *DELIVERY, STORAGE AND HANDLING*

A. Delivery:
   Material shall not be delivered until all related work is in place and finished and/or proper storage facilities and conditions can be provided and guaranteed stable according to FieldTurf USA, Inc. recommendations.

B. Storage:
   1. Store the material in a secure, clean and dry location.
   2. Maintain temperature between 55° and 85° Fahrenheit.
   3. Store the indoor resilient athletic surfacing rolls in an upright position on a smooth flat surface immediately upon delivery to jobsite.
   4. Rolls shipped in rigid protective cardboard containers can be laid horizontally prior to unpacking and installation.

1.5 *PROJECT/SITE CONDITIONS*

A. It is the responsibility of the general contractor/construction manager to maintain project/site conditions acceptable for the installation of the indoor resilient multipurpose flooring.

B. The area in which the indoor resilient multipurpose surfacing will be installed shall be dry and weather tight. Permanent heat, light and ventilation shall be installed and operable.

C. All other trades shall have completed their work prior to the installation of the resilient athletic flooring. The general contractor or construction manager shall maintain a secure and clean working environment before, during and after the installation.

D. Maintain a stable room temperature of at least 65°F for a minimum of one (1) week prior to, during and thereafter installation.

E. An effective low-permeance vapor barrier is placed directly beneath the concrete subfloor. For "on" or "below grade" installations, it is recommended to provide a permanent vapor barrier resistant to long term hydrostatic pressure/moisture exposure. Protrusions should be sealed to prevent moisture migration into the slab. Moisture should not be allowed to enter the slab after the completed construction.

F. Concrete subfloor surface pH level within the 7 to 11 range dependent upon installation type.

G. Concrete subfloor should be no greater than 1/8" within a 10 ft diameter. This tolerance can be measured in accordance with ASTM E1155. A specified (F_F) of 50 and an (F_L) of 30 should reach this degree of floor flatness and floor level. There is no numerical correlation between F numbers and the deviation from the straight

edge. However, the above specified numbers should achieve a flat floor with minimal deviation in the slab. Reference ACI 117 and ACI 302.1R. The general contractor should provide a certificate of compliance with the above recommendations.

H. Concrete subfloor must be clean and free of all foreign materials or objects including, but not limited to, curing compounds and sealers.

I. Fill cracks, grooves, voids, depressions, and other minor imperfections. Follow the manufacturer's directions. Moveable joints must be treated utilizing specific transitioning joint devices depending upon the architect's recommendations. Follow current ASTM F710 guidelines for the preparation of concrete slabs to receive resilient flooring.

J. Refer to ACI 302.2R "Guidelines for Concrete Slabs that Receive Moisture-Sensitive Flooring Materials" for concrete design and construction.

K. Concrete slab shall be fortified with continual steel reinforcement. Fiber reinforcement alone shall not be considered adequate fortification.

1.6 *WARRANTY*

A. Special Limited Warranty:
   1. Manufacturer's standard form in which manufacturer agrees to repair or replace sports flooring including labor that fails within specified warranty period.

B. Material warranty must be direct from the product manufacturer.
   1. Material warranties must come from original manufacturer or division thereof. Private label warranties from distributors or brokers are not valid. Supply original point of manufacturing upon request.

C. Failures include, but are not limited to, the following:
   1. Material manufacturing defects.
   2. Surface wear and deterioration to the point of wear-through of wear layer per ASTM F410/ASTM F1303.
   3. Failure due to substrate moisture exposure exceeding 98 percent relative humidity when tested according to ASTM F2170.

D. Warranty Period:
   1. <u>For material defects and surface wear-through:</u> **25** years from date of substantial completion.
   2. <u>For moisture vapor tolerance:</u> **25** years from date of substantial completion.

E. Installer's Limited Warranty:
   1. Installer's standard form in which installer agrees to repair or replace sports flooring that fails due to poor workmanship or faulty installation within the specified warranty period.
   2. Warranty Period: 2 years from date of substantial completion.

1.7 *ADDITIONAL MATERIALS*

A. Furnish to the owner additional materials containing a total of at least 1% of each different color or design of the indoor resilient athletic surfacing used on the project.

1.8 *LEED™ CERTIFICATION*

A. The indoor resilient athletic surfacing should be able to help this facility to achieve points towards *LEED™ certification.* Flooring system must be certified by FloorScore.
B. LEED categories positively affected by the indoor resilient athletic surfacing:

LEED™ V4 Credit		Contribution
Materials & Resources: Building Product Disclosure & Optimization (BPDO)		
MRc3: Sourcing of Raw Materials	Options 1 & 2	2 Points
MRc4: Material Ingredients	Option 1	1 Point
MRc5: Construction and Demolition Management	Reclamation and Recycling	ReStart® Program
Indoor Environmental Quality		
EQc2: Low-Emitting Materials	TVOC: 0.5 mg/m3 or less	FloorScore®

PART 2 - PRODUCTS

2.1 *MANUFACTURERS*

A. The basis of the design for the indoor resilient multipurpose surfacing is Omnisports Multi-Use as manufactured by Tarkett.
B. All other installation accessories and related components must be either made or approved by the indoor resilient athletic surfacing manufacturer.
C. Other products may be approved as equal if deemed qualified and submitted in accordance with the General Conditions.
D. Test reports confirming compliance from an independent sports laboratory must be provided along with samples, technical data, installation, maintenance, and warranty prior to acceptance as an alternative product.

2.2 *MATERIALS*

A. Omnisports Multi-Use - Prefabricated sport surface 6.2 mm (0.14″) with wood flooring design, single surface embossing and Extreme Three (3) Layers technology (X3LT) as supplied by Tarkett.
   1. Embossing of wood design and solid colors must be the same; varying embossing or surface textures will not be allowed.
   2. Printing of wood design shall closely resemble standard wood strip flooring in size, color, board length, and grain appearance.
   3. Surface embossing combined with TopClean XP must offer proper balance of surface friction per the ASTM F2772.
   4. Surface embossing combined with TopClean XP must provide resistance to stains and scratches. Surface profile must not incorporate linear embossing.
   5. The wood design shall be protected by a clear layer of pure PVC (Polyvinyl Chloride) and TopClean XP, a factory-applied UV cured urethane treatment.
   6. Extreme Three (3) Layers technology (X3LT) includes Omnisports XCS cushion, glass veil and calendared sheet must offer improved shock absorbing comfort while providing better indentation recovery

7. The XCS cushion force reduction layer shall be high-density closed cell PVC foam with honeycomb embossing, and is applied in one continuous manufacturing process.
8. Laminated or adhered foam layers will not be allowed.
9. Field constructed products will not be accepted.

A. Physical properties of the indoor resilient athletic surfacing shall conform to the following minimums:

Width	—	6′ 6″ (2 m)
Length	—	85′ (25.9m) approx.
Wear Layer	—	2 mm
Total Thickness	—	6.2 mm
Wear Layer	Type 1– Grade 1	ASTM F1303/F410
Vertical Deformation	PASSED	ASTM F2772
Rolling Load	PASSED	≤0.50 mm (EN 1569 {11/1999})
Surface Finish Effect	PASSED	ASTM F2772 (80 – 110)
Chemical Resistance	Excellent	ASTM F925
Impact Resistance	PASSED	EN 1717
Abrasion Resistance	PASSED	0.10 (EN ISO 5470-1 {06/1999})
Static Load Limit	PASSED	ASTM F970- Load 175 Lbs
Sound Insulation	Excellent	+/= 19 dB (ISO 717/2)
In-Room Sound Insulation	Excellent	65dB (NF S31-074)
Ball Rebound	PASSED	ASTM F2772 > 90%
Force Reduction	PASSED	ASTM F2772 Class 2
Fire Rating	PASSED	ASTM E648 Class 1
Microbial Assays Test	No Growth	G21 ASTM - Backing
Asthma and Allergy Friendly™	ASP: 05-01/101	Certified Compliant
VOC	<10µg/m³	ASTM D5116 (small chamber)
Phthalate-free technology	—	YES
REACH Compliant	—	YES
Heavy Metals	—	NO
ISO 9001	—	YES
ISO 14001	—	YES

1. Color: As available from the indoor resilient athletic surfacing manufacturer's standard range.
2. Hardwood Design Series: High definition printing for a realistic wood surface appearance as available from the indoor resilient athletic surfacing manufacturer's standard range.
3. Texture: Texture to remain consistent between solid colors and wood design when blending colors.

C. Welding Rod: As supplied by the indoor resilient athletic surfacing manufacturer or supplier.
   1. Color to blend with the indoor resilient athletic surfacing color or design.
   2. All seams shall be welded to create a monolithic and impermeable surface.

D. Adhesive: As approved by the indoor resilient athletic surfacing manufacturer.

E. Game Line Paint and Primer: As approved by the indoor resilient athletic surfacing manufacturer.

PART 3 - EXECUTION

3.1 *EXAMINATION*

A. It is the responsibility of the general contractor/construction manager to ensure that project/site conditions are acceptable for the installation of the indoor resilient athletic flooring.
B. Verify that the area in which the indoor resilient athletic surfacing will be installed is dry and weather tight. Verify that permanent heat, light and ventilation are installed and operable.
C. Verify that all other work that could cause damage, dirt and dust or interrupt the normal pace of the indoor resilient athletic flooring installation is completed or suspended.
D. Verify that there is a stable room temperature of at least 65◦F.
E. Verify that there are no foreign materials or objects on the subfloor and that the subfloor is clean and ready for installation.
F. *Direct Full Spread Adhering to Concrete Subfloor Multi-Poxy : moisture content less than 98% RH when tested per ASTM F2170.*
G. Follow Fieldturf USA, Inc. installation recommendations.
H. Do not average the results of the tests. Report all field test results in writing to the General Contractor, Architect, and End User prior to installation.
I. Verify that the concrete subfloor surface pH level is within the 7 - 11 range.
J. Document the results confirming the slab is within manufacturer's tolerances for slab deviation.

3.2 *PREPARATION OF SURFACES*

A. Sand the entire surface of the concrete slab.
B. Sweep the concrete slab so as to remove all dirt and dust. If a sweeping compound is to be used it must be a sweeping compound that does not contain oil or other items that may inhibit the adhesive bond.
C. Slab must be dust free. In the event that dust impairs adhesive bond, priming the slab prior to application of adhesive may be necessary. Follow installation guidelines.
D. Follow OSHA guidelines.

3.3 *INSTALLATION*

A. The installation area shall be closed to all traffic and activity for a period to be set by the indoor resilient athletic surfacing installer. The indoor resilient athletic surfacing installation shall not begin until the installer is familiar with the existing conditions.
B. All necessary precautions should be taken to minimize noise, smell, dust, the use of hazardous materials and any other items that may inconvenience others.
C. Install the indoor resilient athletic surfacing in strict accordance with the indoor resilient athletic surfacing manufacturer's written instructions.
D. Install the indoor resilient athletic surfacing minimizing cross seams. Provide a seam diagram during the submittal process for approval prior to installation. Vinyl Sheet Flooring Seams: Comply with ASTM F 1516. Rout joints and heat weld to permanently and seamlessly fuse sections together.
E. Paint game lines using approved game line paint primer and game line paint in strict accordance with the game line paint manufacturer's instructions.
F. Install appropriate threshold plates or transition strips where necessary.

3.5 *CLEANING*

A. Remove all unused materials, tools, and equipment and dispose of any debris properly. Clean the indoor resilient athletic surfacing in accordance with the manufacturer's instructions.

3.6 *PROTECTION*

A. If required, protect the indoor resilient athletic surfacing from damage using coverings approved by the manufacturer until acceptance of work by the customer or their authorized representative.

3.7 *RELATED STANDARDS AND GUIDELINES*

A. ASTM F2170 "Standard Test Method for Determining Relative Humidity In Concrete Floor Slabs Using In-Situ Probes"
B. ASTM F710 "Standard Practice for Preparing Concrete Floors to Receive Resilient Flooring"
C. ACI 302.2R-06 "Guideline for Concrete Slabs that Receive Moisture-Sensitive Flooring Materials"
D. ASTM F2772-11 "Standard Specification for Athletic Performance Properties of Indoor Sports Floor Systems"

END OF SECTION

SECTION 09 65 66
ARCHITECTURAL SPECIFICATIONS FOR INDOOR RESILIENT ATHLETIC SURFACING

PART 1 – GENERAL

1.1 *SECTION INCLUDES*

A. Supply and installation of the indoor resilient multipurpose surfacing
B. Application of the game lines
C. References for the correct construction and preparation of concrete slabs to receive resilient flooring.

1.2 *SUBMITTALS*

A. Product Data:
   1. Manufacturer's promotional brochures, specifications and installation instructions
B. Manufacturer Certifications:
   1. Provide certification that accurately identifies the Original Equipment Manufacturer (OEM) of flooring furnished for this project including manufacturer's name, address and factory location.
   2. Suppliers of private label flooring for this project must identify themselves as such and fully disclose the OEM information listed above.
   3. All "manufacturer" requirements in these specifications must be complied with by the OEM, including warranties, certifications, qualifications, product data, test results, environmental requirements, performance data, etc.
C. Samples:
   1. Submit for selection and approval three (3) sets of the indoor resilient multipurpose surfacing, manufacturer's brochures, samples or sample boards of all of the available colors, textures and styles.
   2. Submit color samples of all the available game line paint colors for selection and approval.
D. Closeout Submittals:
   1. Submit three (3) copies of the indoor resilient multipurpose surfacing and manufacturer's maintenance instructions.
   2. Submit three (3) copies of the material and installation warranties as specified.

1.3 *QUALITY ASSURANCE*

A. Qualifications:
   1. The indoor resilient multipurpose surfacing shall have been actively marketed for a minimum of ten (10) years.
   2. The indoor resilient multipurpose surfacing shall be manufactured in an ISO 9001 certified plant.
   3. The indoor resilient multipurpose surfacing shall be manufactured in an ISO 14001 certified plant.
   4. The indoor resilient multipurpose surfacing supplier shall be an established firm, experienced in the field, and competent in the techniques required by the manufacturer.
   5. The installer of the indoor resilient multipurpose surfacing shall have a minimum of five (5) years of experience in the field installing indoor resilient multipurpose surfacing and have worked on at least five (5) projects of similar size, type and complexity.

B. Certifications:
   1. Installer to submit the indoor resilient athletic surfacing manufacturer's or distributor's certification attesting that they are an approved installer of the indoor resilient multipurpose surfacing.
   2. The ind**o**or resilient multipurpose surfacing manufacturer to submit official ISO 9001 certification for the facility in which the indoor resilient multipurpose surfacing is manufactured.

C. Testing:
   Tests shall be relative for multi-purpose use with certificates from independent testing resources to be made available upon request. Test results shall be performed according to ASTM standard testing procedures including ASTM F2772 "Standard Specification for Athletic Performance Properties of Indoor Sports Floor Systems".

1.4 *DELIVERY, STORAGE AND HANDLING*

A. Delivery:
   Material shall not be delivered until all related work is in place and finished and/or proper storage facilities and conditions can be provided and guaranteed stable according to FieldTurf USA, Inc. recommendations.

B. Storage:
   1. Store the material in a secure, clean and dry location.
   2. Maintain temperature between 55° and 85° Fahrenheit.
   3. Store the indoor resilient athletic surfacing rolls in an upright position on a smooth flat surface immediately upon delivery to jobsite.
   4. Rolls shipped in rigid protective cardboard containers can be laid horizontally prior to unpacking and installation.

1.5 *PROJECT/SITE CONDITIONS*

A. It is the responsibility of the general contractor/construction manager to maintain project/site conditions acceptable for the installation of the indoor resilient multipurpose flooring.

B. The area in which the indoor resilient multipurpose surfacing will be installed shall be dry and weather tight. Permanent heat, light and ventilation shall be installed and operable.

C. All other trades shall have completed their work prior to the installation of the resilient athletic flooring. The general contractor or construction manager shall maintain a secure and clean working environment before, during and after the installation.

D. Maintain a stable room temperature of at least 65°F for a minimum of one (1) week prior to, during and thereafter installation.

E. An effective low-permeance vapor barrier is placed directly beneath the concrete subfloor. For "on" or "below grade" installations, it is recommended to provide a permanent vapor barrier resistant to long term hydrostatic pressure/moisture exposure. Protrusions should be sealed to prevent moisture migration into the slab. Moisture should not be allowed to enter the slab after the completed construction.

F. Concrete subfloor surface pH level within the 7 to 11 range dependent upon installation type.

G. Concrete subfloor should be no greater than 1/8" within a 10 ft diameter. This tolerance can be measured in accordance with ASTM E1155. A specified (F_F) of 50 and an (F_L) of 30 should reach this degree of floor flatness and floor level. There is no numerical correlation between F numbers and the deviation from the straight

edge. However, the above specified numbers should achieve a flat floor with minimal deviation in the slab. Reference ACI 117 and ACI 302.1R. The general contractor should provide a certificate of compliance with the above recommendations.

H. Concrete subfloor must be clean and free of all foreign materials or objects including, but not limited to, curing compounds and sealers.

I. Fill cracks, grooves, voids, depressions, and other minor imperfections. Follow the manufacturer's directions. Moveable joints must be treated utilizing specific transitioning joint devices depending upon the architect's recommendations. Follow current ASTM F710 guidelines for the preparation of concrete slabs to receive resilient flooring.

J. Refer to ACI 302.2R "Guidelines for Concrete Slabs that Receive Moisture-Sensitive Flooring Materials" for concrete design and construction.

K. Concrete slab shall be fortified with continual steel reinforcement. Fiber reinforcement alone shall not be considered adequate fortification.

1.6 *WARRANTY*

A. Special Limited Warranty:
   1. Manufacturer's standard form in which manufacturer agrees to repair or replace sports flooring including labor that fails within specified warranty period.

B. Material warranty must be direct from the product manufacturer.
   1. Material warranties must come from original manufacturer or division thereof. Private label warranties from distributors or brokers are not valid. Supply original point of manufacturing upon request.

C. Failures include, but are not limited to, the following:
   1. Material manufacturing defects.
   2. Surface wear and deterioration to the point of wear-through of wear layer per ASTM F410/ASTM F1303.
   3. Failure due to substrate moisture exposure exceeding 98 percent relative humidity when tested according to ASTM F2170.

D. Warranty Period:
   1. <u>For material defects and surface wear-through:</u> **25** years from date of substantial completion.
   2. <u>For moisture vapor tolerance:</u> **25** years from date of substantial completion.

E. Installer's Limited Warranty:
   1. Installer's standard form in which installer agrees to repair or replace sports flooring that fails due to poor workmanship or faulty installation within the specified warranty period.
   2. Warranty Period: 2 years from date of substantial completion.

1.7 *ADDITIONAL MATERIALS*

A. Furnish to the owner additional materials containing a total of at least 1% of each different color or design of the indoor resilient athletic surfacing used on the project.

1.8 *LEED™ CERTIFICATION*

A. The indoor resilient athletic surfacing should be able to help this facility to achieve points towards *LEED™ certification.* Flooring system must be certified by FloorScore.
B. LEED categories positively affected by the indoor resilient athletic surfacing:

LEED™ V4 Credit		Contribution
Materials & Resources: Building Product Disclosure & Optimization (BPDO)		
MRc3: Sourcing of Raw Materials	Options 1 & 2	2 Points
MRc4: Material Ingredients	Option 1	1 Point
MRc5: Construction and Demolition Management	Reclamation and Recycling	ReStart® Program
Indoor Environmental Quality		
EQc2: Low-Emitting Materials	TVOC: 0.5 mg/m3 or less	FloorScore®

PART 2 - PRODUCTS

2.1 *MANUFACTURERS*

A. The basis of the design for the indoor resilient multipurpose surfacing is Omnisports Multi-Use as manufactured by Tarkett.
B. All other installation accessories and related components must be either made or approved by the indoor resilient athletic surfacing manufacturer.
C. Other products may be approved as equal if deemed qualified and submitted in accordance with the General Conditions.
D. Test reports confirming compliance from an independent sports laboratory must be provided along with samples, technical data, installation, maintenance, and warranty prior to acceptance as an alternative product.

2.2 *MATERIALS*

A. Omnisports Multi-Use - Prefabricated sport surface 6.2 mm (0.22″) with wood flooring design and slightly textured embossed surface as supplied by Tarkett.
   1. Embossing of wood design and solid colors must be the same; varying embossing or surface textures will not be allowed.
   2. Printing of wood design shall closely resemble standard wood strip flooring in size, color, board length, and grain appearance.
   3. Surface embossing combined with TopClean XP must offer proper balance of surface friction per the ASTM F2772.
   4. Surface embossing combined with TopClean XP must provide resistance to stains and scratches. Surface profile must not incorporate linear embossing.
   5. The wood design shall be protected by a clear layer of pure PVC (Polyvinyl Chloride) and TopClean XP, a factory-applied UV cured urethane treatment.
   6. Extreme Three (3) Layers technology (X3LT) includes Omnisports XCS cushion, glass veil and calendared sheet must offer improved shock absorbing comfort while providing better indentation recovery
   7. The XCS cushion force reduction layer shall be high-density closed cell PVC foam with honeycomb embossing, and is applied in one continuous manufacturing process.

8. Laminated or adhered foam layers will not be allowed.
9. Field constructed products will not be accepted.

B. Physical properties of the indoor resilient athletic surfacing shall conform to the following minimums:

Width	—	6′ 6″ (2 m)
Length	—	85′ (25.9m) approx.
Wear Layer	—	2 mm
Total Thickness	—	6.2 mm
Wear Layer	Type 1– Grade 1	ASTM F1303/F410
Vertical Deformation	PASSED	ASTM F2772
Rolling Load	PASSED	0.30 (EN 1569 {11/1999})
Surface Finish Effect	PASSED	ASTM F2772 (80 – 110)
Chemical Resistance	Excellent	ASTM F925
Impact Resistance	PASSED	EN 1517
Abrasion Resistance	PASSED	0.10 (EN ISO 5470-1 {06/1999})
Static Load Limit	PASSED	ASTM F970- Load 175 Lbs
Sound Insulation	Excellent	+/= 19 dB (ISO 717/2)
In-Room Sound Insulation	Excellent	61dB (NF S31-074)
Ball Rebound	PASSED	ASTM F2772 > 90%
Force Reduction	PASSED	ASTM F2772 Class 2
Fire Rating	PASSED	ASTM E648 Class 1
Microbial Assays Test	No Growth	G21 ASTM - Backing
Phthalate-free technology	—	YES
REACH Compliant	—	YES
Heavy Metals	—	NO
ISO 9001	—	YES
ISO 14001	—	YES

1. Color: As available from the indoor resilient athletic surfacing manufacturer's standard range.
2. Hardwood Design Series: A wood look design as available from the indoor resilient athletic surfacing manufacturer's standard range.
3. Texture: Texture to remain consistent between solid colors and wood design when blending colors.

C. Welding Rod: As supplied by the indoor resilient athletic surfacing manufacturer or supplier.
   1. Color to blend with the indoor resilient athletic surfacing color or design.
   2. All seams shall be welded to create a monolithic and impermeable surface.

D. Adhesive: As approved by the indoor resilient athletic surfacing manufacturer.

E. Game Line Paint and Primer: As approved by the indoor resilient athletic surfacing manufacturer.

PART 3 - EXECUTION

3.1 *EXAMINATION*

A. It is the responsibility of the general contractor/construction manager to ensure that project/site conditions are acceptable for the installation of the indoor resilient athletic flooring.
B. Verify that the area in which the indoor resilient athletic surfacing will be installed is dry and weather tight. Verify that permanent heat, light and ventilation are installed and operable.
C. Verify that all other work that could cause damage, dirt and dust or interrupt the normal pace of the indoor resilient athletic flooring installation is completed or suspended.
D. Verify that there is a stable room temperature of at least 65◦F.
E. Verify that there are no foreign materials or objects on the subfloor and that the subfloor is clean and ready for installation.
F. *Direct Full Spread Adhering to Concrete Subfloor Multi-Set : moisture content less than 83% RH when tested per ASTM F2170.*
G. Follow Fieldturf USA, Inc. installation recommendations.
H. Do not average the results of the tests. Report all field test results in writing to the General Contractor, Architect, and End User prior to installation.
I. Verify that the concrete subfloor surface pH level is within the 7 - 11 range.
J. Document the results confirming the slab is within manufacturer's tolerances for slab deviation.

3.2 *PREPARATION OF SURFACES*

A. Sand the entire surface of the concrete slab.
B. Sweep the concrete slab so as to remove all dirt and dust. If a sweeping compound is to be used it must be a sweeping compound that does not contain oil or other items that may inhibit the adhesive bond.
C. Slab must be dust free. In the event that dust impairs adhesive bond, priming the slab prior to application of adhesive may be necessary. Follow installation guidelines.
D. Follow OSHA guidelines.

3.3 *INSTALLATION*

A. The installation area shall be closed to all traffic and activity for a period to be set by the indoor resilient athletic surfacing installer. The indoor resilient athletic surfacing installation shall not begin until the installer is familiar with the existing conditions.
B. All necessary precautions should be taken to minimize noise, smell, dust, the use of hazardous materials and any other items that may inconvenience others.
C. Install the indoor resilient athletic surfacing in strict accordance with the indoor resilient athletic surfacing manufacturer's written instructions.
D. Install the indoor resilient athletic surfacing minimizing cross seams. Provide a seam diagram during the submittal process for approval prior to installation. Vinyl Sheet Flooring Seams: Comply with ASTM F 1516. Rout joints and heat weld to permanently and seamlessly fuse sections together.
E. Paint game lines using approved game line paint primer and game line paint in strict accordance with the game line paint manufacturer's instructions.
F. Install appropriate threshold plates or transition strips where necessary.

3.5 *CLEANING*

A. Remove all unused materials, tools, and equipment and dispose of any debris properly. Clean the indoor resilient athletic surfacing in accordance with the manufacturer's instructions.

3.6 *PROTECTION*

A. If required, protect the indoor resilient athletic surfacing from damage using coverings approved by the manufacturer until acceptance of work by the customer or their authorized representative.

3.7 *RELATED STANDARDS AND GUIDELINES*

A. ASTM F2170 "Standard Test Method for Determining Relative Humidity In Concrete Floor Slabs Using In-Situ Probes"
B. ASTM F710 "Standard Practice for Preparing Concrete Floors to Receive Resilient Flooring"
C. ACI 302.2R-06 "Guideline for Concrete Slabs that Receive Moisture-Sensitive Flooring Materials"
D. ASTM F2772-11 "Standard Specification for Athletic Performance Properties of Indoor Sports Floor Systems"

END OF SECTION

SECTION 09 65 66
ARCHITECTURAL SPECIFICATIONS FOR INDOOR RESILIENT ATHLETIC SURFACING

PART 1 – GENERAL

1.1 *SECTION INCLUDES*

A. Supply and installation of the indoor resilient multipurpose surfacing
B. Application of the game lines
C. References for the correct construction and preparation of concrete slabs to receive resilient flooring.

1.2 *SUBMITTALS*

A. Product Data:
   1. Manufacturer's promotional brochures, specifications and installation instructions
B. Manufacturer Certifications:
   1. Provide certification that accurately identifies the Original Equipment Manufacturer (OEM) of flooring furnished for this project including manufacturer's name, address and factory location.
   2. Suppliers of private label flooring for this project must identify themselves as such and fully disclose the OEM information listed above.
   3. All "manufacturer" requirements in these specifications must be complied with by the OEM, including warranties, certifications, qualifications, product data, test results, environmental requirements, performance data, etc.
C. Samples:
   1. Submit for selection and approval three (3) sets of the indoor resilient multipurpose surfacing, manufacturer's brochures, samples or sample boards of all of the available colors, textures and styles.
   2. Submit color samples of all the available game line paint colors for selection and approval.
D. Closeout Submittals:
   1. Submit three (3) copies of the indoor resilient multipurpose surfacing and manufacturer's maintenance instructions.
   2. Submit three (3) copies of the material and installation warranties as specified.

1.3 *QUALITY ASSURANCE*

A. Qualifications:
   1. The indoor resilient multipurpose surfacing shall have been actively marketed for a minimum of ten (10) years.
   2. The indoor resilient multipurpose surfacing shall be manufactured in an ISO 9001 certified plant.
   3. The indoor resilient multipurpose surfacing shall be manufactured in an ISO 14001 certified plant.
   4. The indoor resilient multipurpose surfacing supplier shall be an established firm, experienced in the field, and competent in the techniques required by the manufacturer.
   5. The installer of the indoor resilient multipurpose surfacing shall have a minimum of five (5) years of experience in the field installing indoor resilient multipurpose surfacing and have worked on at least five (5) projects of similar size, type and complexity.

B. Certifications:
   1. Installer to submit the indoor resilient athletic surfacing manufacturer's or distributor's certification attesting that they are an approved installer of the indoor resilient multipurpose surfacing.
   2. The ind**o**or resilient multipurpose surfacing manufacturer to submit official ISO 9001 certification for the facility in which the indoor resilient multipurpose surfacing is manufactured.

C. Testing:
   Tests shall be relative for multi-purpose use with certificates from independent testing resources to be made available upon request. Test results shall be performed according to ASTM standard testing procedures including ASTM F2772 "Standard Specification for Athletic Performance Properties of Indoor Sports Floor Systems".

1.4 *DELIVERY, STORAGE AND HANDLING*

A. Delivery:
   Material shall not be delivered until all related work is in place and finished and/or proper storage facilities and conditions can be provided and guaranteed stable according to FieldTurf USA, Inc. recommendations.

B. Storage:
   1. Store the material in a secure, clean and dry location.
   2. Maintain temperature between 55° and 85° Fahrenheit.
   3. Store the indoor resilient athletic surfacing rolls in an upright position on a smooth flat surface immediately upon delivery to jobsite.
   4. Rolls shipped in rigid protective cardboard containers can be laid horizontally prior to unpacking and installation.

1.5 *PROJECT/SITE CONDITIONS*

A. It is the responsibility of the general contractor/construction manager to maintain project/site conditions acceptable for the installation of the indoor resilient multipurpose flooring.

B. The area in which the indoor resilient multipurpose surfacing will be installed shall be dry and weather tight. Permanent heat, light and ventilation shall be installed and operable.

C. All other trades shall have completed their work prior to the installation of the resilient athletic flooring. The general contractor or construction manager shall maintain a secure and clean working environment before, during and after the installation.

D. Maintain a stable room temperature of at least 65°F for a minimum of one (1) week prior to, during and thereafter installation.

E. An effective low-permeance vapor barrier is placed directly beneath the concrete subfloor. For "on" or "below grade" installations, it is recommended to provide a permanent vapor barrier resistant to long term hydrostatic pressure/moisture exposure. Protrusions should be sealed to prevent moisture migration into the slab. Moisture should not be allowed to enter the slab after the completed construction.

F. Concrete subfloor surface pH level within the 7 to 11 range dependent upon installation type.

G. Concrete subfloor should be no greater than 1/8" within a 10 ft diameter. This tolerance can be measured in accordance with ASTM E1155. A specified (F_F) of 50 and an (F_L) of 30 should reach this degree of floor flatness and floor level. There is no numerical correlation between F numbers and the deviation from the straight

edge. However, the above specified numbers should achieve a flat floor with minimal deviation in the slab. Reference ACI 117 and ACI 302.1R. The general contractor should provide a certificate of compliance with the above recommendations.

H. Concrete subfloor must be clean and free of all foreign materials or objects including, but not limited to, curing compounds and sealers.

I. Fill cracks, grooves, voids, depressions, and other minor imperfections. Follow the manufacturer's directions. Moveable joints must be treated utilizing specific transitioning joint devices depending upon the architect's recommendations. Follow current ASTM F710 guidelines for the preparation of concrete slabs to receive resilient flooring.

J. Refer to ACI 302.2R "Guidelines for Concrete Slabs that Receive Moisture-Sensitive Flooring Materials" for concrete design and construction.

K. Concrete slab shall be fortified with continual steel reinforcement. Fiber reinforcement alone shall not be considered adequate fortification.

1.6 *WARRANTY*

A. Special Limited Warranty:
   1. Manufacturer's standard form in which manufacturer agrees to repair or replace sports flooring including labor that fails within specified warranty period.

B. Material warranty must be direct from the product manufacturer.
   1. Material warranties must come from original manufacturer or division thereof. Private label warranties from distributors or brokers are not valid. Supply original point of manufacturing upon request.

C. Failures include, but are not limited to, the following:
   1. Material manufacturing defects.
   2. Surface wear and deterioration to the point of wear-through of wear layer per ASTM F410/ASTM F1303.
   3. Failure due to substrate moisture exposure exceeding 98 percent relative humidity when tested according to ASTM F2170.

D. Warranty Period:
   1. <u>For material defects and surface wear-through:</u> **25** years from date of substantial completion.
   2. <u>For moisture vapor tolerance:</u> **25** years from date of substantial completion.

E. Installer's Limited Warranty:
   1. Installer's standard form in which installer agrees to repair or replace sports flooring that fails due to poor workmanship or faulty installation within the specified warranty period.
   2. Warranty Period: 2 years from date of substantial completion.

1.7 *ADDITIONAL MATERIALS*

A. Furnish to the owner additional materials containing a total of at least 1% of each different color or design of the indoor resilient athletic surfacing used on the project.

1.8 *LEED™ CERTIFICATION*

A. The indoor resilient athletic surfacing should be able to help this facility to achieve points towards *LEED™ certification.* Flooring system must be certified by FloorScore.
B. LEED categories positively affected by the indoor resilient athletic surfacing:

LEED™ V4 Credit		Contribution
Materials & Resources: Building Product Disclosure & Optimization (BPDO)		
MRc3: Sourcing of Raw Materials	Options 1 & 2	2 Points
MRc4: Material Ingredients	Option 1	1 Point
MRc5: Construction and Demolition Management	Reclamation and Recycling	ReStart® Program
Indoor Environmental Quality		
EQc2: Low-Emitting Materials	TVOC: 0.5 mg/m3 or less	FloorScore®

PART 2 - PRODUCTS

2.1 *MANUFACTURERS*

A. The basis of the design for the indoor resilient multipurpose surfacing is Omnisports Multi-Use as manufactured by Tarkett.
B. All other installation accessories and related components must be either made or approved by the indoor resilient athletic surfacing manufacturer.
C. Other products may be approved as equal if deemed qualified and submitted in accordance with the General Conditions.
D. Test reports confirming compliance from an independent sports laboratory must be provided along with samples, technical data, installation, maintenance, and warranty prior to acceptance as an alternative product.

2.2 *MATERIALS*

A. Omnisports Multi-Use - Prefabricated sport surface 6.2 mm (0.14″) with wood flooring design, single surface embossing and Extreme Three (3) Layers technology (X3LT) as supplied by Tarkett.
   1. Embossing of wood design and solid colors must be the same; varying embossing or surface textures will not be allowed.
   2. Printing of wood design shall closely resemble standard wood strip flooring in size, color, board length, and grain appearance.
   3. Surface embossing combined with TopClean XP must offer proper balance of surface friction per the ASTM F2772.
   4. Surface embossing combined with TopClean XP must provide resistance to stains and scratches. Surface profile must not incorporate linear embossing.
   5. The wood design shall be protected by a clear layer of pure PVC (Polyvinyl Chloride) and TopClean XP, a factory-applied UV cured urethane treatment.
   6. Extreme Three (3) Layers technology (X3LT) includes Omnisports XCS cushion, glass veil and calendared sheet must offer improved shock absorbing comfort while providing better indentation recovery

7. The XCS cushion force reduction layer shall be high-density closed cell PVC foam with honeycomb embossing, and is applied in one continuous manufacturing process.
8. Laminated or adhered foam layers will not be allowed.
9. Field constructed products will not be accepted.

A. Physical properties of the indoor resilient athletic surfacing shall conform to the following minimums:

Width	—	6′ 6″ (2 m)
Length	—	85′ (25.9m) approx.
Wear Layer	—	2 mm
Total Thickness	—	6.2 mm
Wear Layer	Type 1– Grade 1	ASTM F1303/F410
Vertical Deformation	PASSED	ASTM F2772
Rolling Load	PASSED	≤0.50 mm (EN 1569 {11/1999})
Surface Finish Effect	PASSED	ASTM F2772 (80 – 110)
Chemical Resistance	Excellent	ASTM F925
Impact Resistance	PASSED	EN 1717
Abrasion Resistance	PASSED	0.10 (EN ISO 5470-1 {06/1999})
Static Load Limit	PASSED	ASTM F970- Load 175 Lbs
Sound Insulation	Excellent	+/= 19 dB (ISO 717/2)
In-Room Sound Insulation	Excellent	65dB (NF S31-074)
Ball Rebound	PASSED	ASTM F2772 > 90%
Force Reduction	PASSED	ASTM F2772 Class 2
Fire Rating	PASSED	ASTM E648 Class 1
Microbial Assays Test	No Growth	G21 ASTM - Backing
Asthma and Allergy Friendly™	ASP: 05-01/101	Certified Compliant
VOC	<10µg/m³	ASTM D5116 (small chamber)
Phthalate-free technology	—	YES
REACH Compliant	—	YES
Heavy Metals	—	NO
ISO 9001	—	YES
ISO 14001	—	YES

1. Color: As available from the indoor resilient athletic surfacing manufacturer's standard range.
2. Hardwood Design Series: High definition printing for a realistic wood surface appearance as available from the indoor resilient athletic surfacing manufacturer's standard range.
3. Texture: Texture to remain consistent between solid colors and wood design when blending colors.

C. Tarkolay – A high quality low permeance slip sheet vapor retarder designed to separate the installed system from the substrate below.
1. Tarkolay as manufactured by Tarkett can be used below, on, or above grade substrates that experience elevated moisture conditions.
2. Moisture tolerances shall have no limitation per ASTM F2170. Physical properties of the indoor resilient athletic surfacing shall conform to the following minimums:

Width	—	6′ 6″ (2 m)
Length	—	147′7‴ (45 m) approx.
Total Thickness	—	1.3 mm
Dimensional Stability	PASSED	.01% (EN 1434)

Permeance	Excellent	<0.20 (ASTM E96

D. Welding Rod: As supplied by the indoor resilient athletic surfacing manufacturer or supplier.
   1. Color to blend with the indoor resilient athletic surfacing color or design.
   2. All seams shall be welded to create a monolithic and impermeable surface.
E. Adhesive: As approved by the indoor resilient athletic surfacing manufacturer.
F. Game Line Paint and Primer: As approved by the indoor resilient athletic surfacing manufacturer.

PART 3 - EXECUTION

3.1 *EXAMINATION*

A. It is the responsibility of the general contractor/construction manager to ensure that project/site conditions are acceptable for the installation of the indoor resilient athletic flooring.
B. Verify that the area in which the indoor resilient athletic surfacing will be installed is dry and weather tight. Verify that permanent heat, light and ventilation are installed and operable.
C. Verify that all other work that could cause damage, dirt and dust or interrupt the normal pace of the indoor resilient athletic flooring installation is completed or suspended.
D. Verify that there is a stable room temperature of at least 65◦F.
E. Verify that there are no foreign materials or objects on the subfloor and that the subfloor is clean and ready for installation.
F. *Installation with Tarkolay to Concrete Subfloor : moisture content no limitation when tested per ASTM F2170.*
G. Follow Fieldturf USA, Inc. installation recommendations.
H. Do not average the results of the tests. Report all field test results in writing to the General Contractor, Architect, and End User prior to installation.
I. Verify that the concrete subfloor surface pH level is within the 7 - 11 range.
J. Document the results confirming the slab is within manufacturer's tolerances for slab deviation.

3.2 *PREPARATION OF SURFACES*

A. Sand the entire surface of the concrete slab.
B. Sweep the concrete slab so as to remove all dirt and dust. If a sweeping compound is to be used it must be a sweeping compound that does not contain oil or other items that may inhibit the adhesive bond.
C. Slab must be dust free. In the event that dust impairs adhesive bond, priming the slab prior to application of adhesive may be necessary. Follow installation guidelines.
D. Follow OSHA guidelines.

3.3 *INSTALLATION*

A. The installation area shall be closed to all traffic and activity for a period to be set by the indoor resilient athletic surfacing installer. The indoor resilient athletic surfacing installation shall not begin until the installer is familiar with the existing conditions.
B. All necessary precautions should be taken to minimize noise, smell, dust, the use of hazardous materials and any other items that may inconvenience others.
C. Install the indoor resilient athletic surfacing in strict accordance with the indoor resilient athletic surfacing manufacturer's written instructions.
D. Install the indoor resilient athletic surfacing minimizing cross seams. Provide a seam diagram during the submittal process for approval prior to installation. Vinyl Sheet Flooring Seams: Comply with ASTM F 1516. Rout joints and heat weld to permanently and seamlessly fuse sections together.
E. Paint game lines using approved game line paint primer and game line paint in strict accordance with the game line paint manufacturer's instructions.
F. Install appropriate threshold plates or transition strips where necessary.

3.5 *CLEANING*

A. Remove all unused materials, tools, and equipment and dispose of any debris properly. Clean the indoor resilient athletic surfacing in accordance with the manufacturer's instructions.

3.6 *PROTECTION*

A. If required, protect the indoor resilient athletic surfacing from damage using coverings approved by the manufacturer until acceptance of work by the customer or their authorized representative.

3.7 *RELATED STANDARDS AND GUIDELINES*

A. ASTM F2170 "Standard Test Method for Determining Relative Humidity In Concrete Floor Slabs Using In-Situ Probes"
B. ASTM F710 "Standard Practice for Preparing Concrete Floors to Receive Resilient Flooring"
C. ACI 302.2R-06 "Guideline for Concrete Slabs that Receive Moisture-Sensitive Flooring Materials"
D. ASTM F2772-11 "Standard Specification for Athletic Performance Properties of Indoor Sports Floor Systems"

END OF SECTION

SECTION 09 65 66
ARCHITECTURAL SPECIFICATIONS FOR INDOOR RESILIENT ATHLETIC SURFACING

PART 1 – GENERAL

1.1 *SECTION INCLUDES*

A. Supply and installation of the indoor resilient multipurpose surfacing
B. Application of the game lines
C. References for the correct construction and preparation of concrete slabs to receive resilient flooring.

1.2 *SUBMITTALS*

A. Product Data:
   1. Manufacturer's promotional brochures, specifications and installation instructions
B. Manufacturer Certifications:
   1. Provide certification that accurately identifies the Original Equipment Manufacturer (OEM) of flooring furnished for this project including manufacturer's name, address and factory location.
   2. Suppliers of private label flooring for this project must identify themselves as such and fully disclose the OEM information listed above.
   3. All "manufacturer" requirements in these specifications must be complied with by the OEM, including warranties, certifications, qualifications, product data, test results, environmental requirements, performance data, etc.
C. Samples:
   1. Submit for selection and approval three (3) sets of the indoor resilient multipurpose surfacing, manufacturer's brochures, samples or sample boards of all of the available colors, textures and styles.
   2. Submit color samples of all the available game line paint colors for selection and approval.
D. Closeout Submittals:
   1. Submit three (3) copies of the indoor resilient multipurpose surfacing and manufacturer's maintenance instructions.
   2. Submit three (3) copies of the material and installation warranties as specified.

1.3 *QUALITY ASSURANCE*

A. Qualifications:
   1. The indoor resilient multipurpose surfacing shall have been actively marketed for a minimum of ten (10) years.
   2. The indoor resilient multipurpose surfacing shall be manufactured in an ISO 9001 certified plant.
   3. The indoor resilient multipurpose surfacing shall be manufactured in an ISO 14001 certified plant.
   4. The indoor resilient multipurpose surfacing supplier shall be an established firm, experienced in the field, and competent in the techniques required by the manufacturer.
   5. The installer of the indoor resilient multipurpose surfacing shall have a minimum of five (5) years of experience in the field installing indoor resilient multipurpose surfacing and have worked on at least five (5) projects of similar size, type and complexity.

B. Certifications:
   1. Installer to submit the indoor resilient athletic surfacing manufacturer's or distributor's certification attesting that they are an approved installer of the indoor resilient multipurpose surfacing.
   2. The ind**o**or resilient multipurpose surfacing manufacturer to submit official ISO 9001 certification for the facility in which the indoor resilient multipurpose surfacing is manufactured.

C. Testing:
   Tests shall be relative for multi-purpose use with certificates from independent testing resources to be made available upon request. Test results shall be performed according to ASTM standard testing procedures including ASTM F2772 "Standard Specification for Athletic Performance Properties of Indoor Sports Floor Systems".

1.4 *DELIVERY, STORAGE AND HANDLING*

A. Delivery:
   Material shall not be delivered until all related work is in place and finished and/or proper storage facilities and conditions can be provided and guaranteed stable according to FieldTurf USA, Inc. recommendations.

B. Storage:
   1. Store the material in a secure, clean and dry location.
   2. Maintain temperature between 55° and 85° Fahrenheit.
   3. Store the indoor resilient athletic surfacing rolls in an upright position on a smooth flat surface immediately upon delivery to jobsite.
   4. Rolls shipped in rigid protective cardboard containers can be laid horizontally prior to unpacking and installation.

1.5 *PROJECT/SITE CONDITIONS*

A. It is the responsibility of the general contractor/construction manager to maintain project/site conditions acceptable for the installation of the indoor resilient multipurpose flooring.

B. The area in which the indoor resilient multipurpose surfacing will be installed shall be dry and weather tight. Permanent heat, light and ventilation shall be installed and operable.

C. All other trades shall have completed their work prior to the installation of the resilient athletic flooring. The general contractor or construction manager shall maintain a secure and clean working environment before, during and after the installation.

D. Maintain a stable room temperature of at least 65°F for a minimum of one (1) week prior to, during and thereafter installation.

E. An effective low-permeance vapor barrier is placed directly beneath the concrete subfloor. For "on" or "below grade" installations, it is recommended to provide a permanent vapor barrier resistant to long term hydrostatic pressure/moisture exposure. Protrusions should be sealed to prevent moisture migration into the slab. Moisture should not be allowed to enter the slab after the completed construction.

F. Concrete subfloor surface pH level within the 7 to 10 range dependent upon installation type.

G. Concrete subfloor should be no greater than 1/8" within a 10 ft diameter. This tolerance can be measured in accordance with ASTM E1155. A specified (F_F) of 50 and an (F_L) of 30 should reach this degree of floor flatness and floor level. There is no numerical correlation between F numbers and the deviation from the straight

edge. However, the above specified numbers should achieve a flat floor with minimal deviation in the slab. Reference ACI 117 and ACI 302.1R. The general contractor should provide a certificate of compliance with the above recommendations.

H. Concrete subfloor must be clean and free of all foreign materials or objects including, but not limited to, curing compounds and sealers.

I. Fill cracks, grooves, voids, depressions, and other minor imperfections. Follow the manufacturer's directions. Moveable joints must be treated utilizing specific transitioning joint devices depending upon the architect's recommendations. Follow current ASTM F710 guidelines for the preparation of concrete slabs to receive resilient flooring.

J. Refer to ACI 302.2R "Guidelines for Concrete Slabs that Receive Moisture-Sensitive Flooring Materials" for concrete design and construction.

K. Concrete slab shall be fortified with continual steel reinforcement. Fiber reinforcement alone shall not be considered adequate fortification.

1.6 *WARRANTY*

A. Special Limited Warranty:
   1. Manufacturer's standard form in which manufacturer agrees to repair or replace sports flooring including labor that fails within specified warranty period.

B. Material warranty must be direct from the product manufacturer.
   1. Material warranties must come from original manufacturer or division thereof. Private label warranties from distributors or brokers are not valid. Supply original point of manufacturing upon request.

C. Failures include, but are not limited to, the following:
   1. Material manufacturing defects.
   2. Surface wear and deterioration to the point of wear-through of wear layer per ASTM F410/ASTM F1303.
   3. Failure due to substrate moisture exposure exceeding 98 percent relative humidity when tested according to ASTM F2170.

D. Warranty Period:
   1. For material defects and surface wear-through: **25** years from date of substantial completion.
   2. For moisture vapor tolerance: **25** years from date of substantial completion.

E. Installer's Limited Warranty:
   1. Installer's standard form in which installer agrees to repair or replace sports flooring that fails due to poor workmanship or faulty installation within the specified warranty period.
   2. Warranty Period: 2 years from date of substantial completion.

1.7 *ADDITIONAL MATERIALS*

A. Furnish to the owner additional materials containing a total of at least 1% of each different color or design of the indoor resilient athletic surfacing used on the project.

1.8 *LEED™ CERTIFICATION*

A. The indoor resilient athletic surfacing should be able to help this facility to achieve points towards *LEED™ certification.* Flooring system must be certified by FloorScore.
B. LEED categories positively affected by the indoor resilient athletic surfacing:

LEED™ V4 Credit		Contribution
Materials & Resources: Building Product Disclosure & Optimization (BPDO)		
MRc3: Sourcing of Raw Materials	Options 1 & 2	2 Points
MRc4: Material Ingredients	Option 1	1 Point
MRc5: Construction and Demolition Management	Reclamation and Recycling	ReStart® Program
Indoor Environmental Quality		
EQc2: Low-Emitting Materials	TVOC: 0.5 mg/m3 or less	FloorScore®

PART 2 - PRODUCTS

2.1 *MANUFACTURERS*

A. The basis of the design for the indoor resilient multipurpose surfacing is Omnisports PurePlay as manufactured by Tarkett.
B. All other installation accessories and related components must be either made or approved by the indoor resilient athletic surfacing manufacturer.
C. Other products may be approved as equal if deemed qualified and submitted in accordance with the General Conditions.
D. Test reports confirming compliance from an independent sports laboratory must be provided along with samples, technical data, installation, maintenance, and warranty prior to acceptance as an alternative product.

2.2 *MATERIALS*

A. Omnisports PurePlay - Prefabricated sport surface 9.4 mm (3/8”) with wood flooring design and slightly textured embossed surface as supplied by Tarkett.
   1. Embossing of wood design and solid colors must be the same; varying embossing or surface textures will not be allowed.
   2. Printing of wood design shall closely resemble standard wood strip flooring in size, color, board length, and grain appearance.
   3. The wood design shall be protected by a clear layer of pure PVC (Polyvinyl Chloride) and TopClean xp, a factory-applied UV cured urethane treatment.
   4. Intermediate layers shall be fortified with a non-woven fiberglass grid for increased dimensional stability.
   5. The foam force reduction layer shall be high-density closed cell PVC foam with honeycomb embossing, and is applied in one continuous manufacturing process.
   6. Laminated or adhered foam layers will not be allowed.
   7. Field constructed products will not be accepted.

B. Physical properties of the indoor resilient athletic surfacing shall conform to the following minimums:

Width	—	6’ 6” (2 m)
Length	—	85’ (25.9m) approx.
Wear Layer	—	2 mm
Total Thickness	—	9.4 mm
Wear Layer	Type 1– Grade 1	ASTM F1303/F410
Vertical Deformation	PASSED	ASTM F2772
Rolling Load	PASSED	0.30 (EN 1569 {11/1999})
Surface Finish Effect	PASSED	ASTM F2772 (80 – 110)
Chemical Resistance	Excellent	ASTM F925
Impact Resistance	PASSED	EN 1517
Abrasion Resistance	PASSED	0.10 (EN ISO 5470-1 {06/1999})
Static Load Limit	PASSED	ASTM F970- Load 175 Lbs
Sound Insulation	Excellent	+/= 19 dB (ISO 717/2)
In-Room Sound Insulation	Excellent	61dB (NF S31-074)
Ball Rebound	PASSED	ASTM F2772 > 90%
Force Reduction	PASSED	ASTM F2772 Class 3
Fire Rating	PASSED	ASTM E648 Class 1
Microbial Assays Test	No Growth	G21 ASTM - Backing
Asthma and Allergy Friendly™	ASP: 05-01/101	Certified Compliant
Phthalate-free technology	—	YES
REACH Compliant	—	YES
Heavy Metals	—	NO
ISO 9001	—	YES
ISO 14001	—	YES

1. Color: As available from the indoor resilient athletic surfacing manufacturer’s standard range.
2. Hardwood Design Series: High definition printing for a realistic wood surface appearance as available from the indoor resilient athletic surfacing manufacturer’s standard range.
3. Texture: Texture to remain consistent between solid colors and wood design when blending colors.

C. Welding Rod: As supplied by the indoor resilient athletic surfacing manufacturer or supplier.
   1. Color to blend with the indoor resilient athletic surfacing color or design.
   2. All seams shall be welded to create a monolithic and impermeable surface.

D. Adhesive: As approved by the indoor resilient athletic surfacing manufacturer.

E. Game Line Paint and Primer: As approved by the indoor resilient athletic surfacing manufacturer.

PART 3 - EXECUTION

3.1 *EXAMINATION*

A. It is the responsibility of the general contractor/construction manager to ensure that project/site conditions are acceptable for the installation of the indoor resilient athletic flooring.
B. Verify that the area in which the indoor resilient athletic surfacing will be installed is dry and weather tight. Verify that permanent heat, light and ventilation are installed and operable.
C. Verify that all other work that could cause damage, dirt and dust or interrupt the normal pace of the indoor resilient athletic flooring installation is completed or suspended.
D. Verify that there is a stable room temperature of at least 65◦F.
E. Verify that there are no foreign materials or objects on the subfloor and that the subfloor is clean and ready for installation.
F. *For GreenLay™ Installation to Concrete Subfloor: moisture content less than 92% RH when tested per ASTM F2170.*
G. Follow Fieldturf USA, Inc. installation recommendations.
H. Do not average the results of the tests. Report all field test results in writing to the General Contractor, Architect, and End User prior to installation.
I. Verify that the concrete subfloor surface pH level is within the 7 - 10 range.
J. Document the results confirming the slab is within manufacturer's tolerances for slab deviation.

3.2 *PREPARATION OF SURFACES*

A. Sand the entire surface of the concrete slab.
B. Sweep the concrete slab so as to remove all dirt and dust. If a sweeping compound is to be used it must be a sweeping compound that does not contain oil or other items that may inhibit the adhesive bond.
C. Slab must be dust free. In the event that dust impairs adhesive bond, priming the slab prior to application of adhesive may be necessary. Follow installation guidelines.
D. Follow OSHA guidelines

3.3 *INSTALLATION*

A. The installation area shall be closed to all traffic and activity for a period to be set by the indoor resilient athletic surfacing installer. The indoor resilient athletic surfacing installation shall not begin until the installer is familiar with the existing conditions.
B. All necessary precautions should be taken to minimize noise, smell, dust, the use of hazardous materials and any other items that may inconvenience others.
C. Install the indoor resilient athletic surfacing in strict accordance with the indoor resilient athletic surfacing manufacturer's written instructions.
D. Install the indoor resilient athletic surfacing minimizing cross seams. Provide a seam diagram during the submittal process for approval prior to installation. Vinyl Sheet Flooring Seams: Comply with ASTM F 1516. Rout joints and heat weld to permanently and seamlessly fuse sections together.
E. Paint game lines using approved game line paint primer and game line paint in strict accordance with the game line paint manufacturer's instructions.
F. Install appropriate threshold plates or transition strips where necessary.

3.5 *CLEANING*

A. Remove all unused materials, tools, and equipment and dispose of any debris properly. Clean the indoor resilient athletic surfacing in accordance with the manufacturer's instructions.

3.6 *PROTECTION*

A. If required, protect the indoor resilient athletic surfacing from damage using coverings approved by the manufacturer until acceptance of work by the customer or their authorized representative.

3.7 *RELATED STANDARDS AND GUIDELINES*

A. ASTM F2170 "Standard Test Method for Determining Relative Humidity In Concrete Floor Slabs Using In-Situ Probes"
B. ASTM F710 "Standard Practice for Preparing Concrete Floors to Receive Resilient Flooring"
C. ACI 302.2R-06 "Guideline for Concrete Slabs that Receive Moisture-Sensitive Flooring Materials"
D. ASTM F2772-11 "Standard Specification for Athletic Performance Properties of Indoor Sports Floor Systems"

END OF SECTION

SECTION 09 65 66
ARCHITECTURAL SPECIFICATIONS FOR INDOOR RESILIENT ATHLETIC SURFACING

PART 1 – GENERAL

1.1 *SECTION INCLUDES*

A. Supply and installation of the indoor resilient multipurpose surfacing
B. Application of the game lines
C. References for the correct construction and preparation of concrete slabs to receive resilient flooring.

1.2 *SUBMITTALS*

A. Product Data:
   1. Manufacturer's promotional brochures, specifications and installation instructions
B. Manufacturer Certifications:
   1. Provide certification that accurately identifies the Original Equipment Manufacturer (OEM) of flooring furnished for this project including manufacturer's name, address and factory location.
   2. Suppliers of private label flooring for this project must identify themselves as such and fully disclose the OEM information listed above.
   3. All "manufacturer" requirements in these specifications must be complied with by the OEM, including warranties, certifications, qualifications, product data, test results, environmental requirements, performance data, etc.
C. Samples:
   1. Submit for selection and approval three (3) sets of the indoor resilient multipurpose surfacing, manufacturer's brochures, samples or sample boards of all of the available colors, textures and styles.
   2. Submit color samples of all the available game line paint colors for selection and approval.
D. Closeout Submittals:
   1. Submit three (3) copies of the indoor resilient multipurpose surfacing and manufacturer's maintenance instructions.
   2. Submit three (3) copies of the material and installation warranties as specified.

1.3 *QUALITY ASSURANCE*

A. Qualifications:
   1. The indoor resilient multipurpose surfacing shall have been actively marketed for a minimum of ten (10) years.
   2. The indoor resilient multipurpose surfacing shall be manufactured in an ISO 9001 certified plant.
   3. The indoor resilient multipurpose surfacing shall be manufactured in an ISO 14001 certified plant.
   4. The indoor resilient multipurpose surfacing supplier shall be an established firm, experienced in the field, and competent in the techniques required by the manufacturer.
   5. The installer of the indoor resilient multipurpose surfacing shall have a minimum of five (5) years of experience in the field installing indoor resilient multipurpose surfacing and have worked on at least five (5) projects of similar size, type and complexity.

B. Certifications:
   1. Installer to submit the indoor resilient athletic surfacing manufacturer's or distributor's certification attesting that they are an approved installer of the indoor resilient multipurpose surfacing.
   2. The ind**o**or resilient multipurpose surfacing manufacturer to submit official ISO 9001 certification for the facility in which the indoor resilient multipurpose surfacing is manufactured.

C. Testing:
   Tests shall be relative for multi-purpose use with certificates from independent testing resources to be made available upon request. Test results shall be performed according to ASTM standard testing procedures including ASTM F2772 "Standard Specification for Athletic Performance Properties of Indoor Sports Floor Systems".

1.4 *DELIVERY, STORAGE AND HANDLING*

A. Delivery:
   Material shall not be delivered until all related work is in place and finished and/or proper storage facilities and conditions can be provided and guaranteed stable according to FieldTurf USA, Inc. recommendations.

B. Storage:
   1. Store the material in a secure, clean and dry location.
   2. Maintain temperature between 55° and 85° Fahrenheit.
   3. Store the indoor resilient athletic surfacing rolls in an upright position on a smooth flat surface immediately upon delivery to jobsite.
   4. Rolls shipped in rigid protective cardboard containers can be laid horizontally prior to unpacking and installation.

1.5 *PROJECT/SITE CONDITIONS*

A. It is the responsibility of the general contractor/construction manager to maintain project/site conditions acceptable for the installation of the indoor resilient multipurpose flooring.

B. The area in which the indoor resilient multipurpose surfacing will be installed shall be dry and weather tight. Permanent heat, light and ventilation shall be installed and operable.

C. All other trades shall have completed their work prior to the installation of the resilient athletic flooring. The general contractor or construction manager shall maintain a secure and clean working environment before, during and after the installation.

D. Maintain a stable room temperature of at least 65°F for a minimum of one (1) week prior to, during and thereafter installation.

E. An effective low-permeance vapor barrier is placed directly beneath the concrete subfloor. For "on" or "below grade" installations, it is recommended to provide a permanent vapor barrier resistant to long term hydrostatic pressure/moisture exposure. Protrusions should be sealed to prevent moisture migration into the slab. Moisture should not be allowed to enter the slab after the completed construction.

F. Concrete subfloor surface pH level within the 7 to 11 range dependent upon installation type.

G. Concrete subfloor should be no greater than 1/8" within a 10 ft diameter. This tolerance can be measured in accordance with ASTM E1155. A specified (F_F) of 50 and an (F_L) of 30 should reach this degree of floor flatness and floor level. There is no numerical correlation between F numbers and the deviation from the straight

edge. However, the above specified numbers should achieve a flat floor with minimal deviation in the slab. Reference ACI 117 and ACI 302.1R. The general contractor should provide a certificate of compliance with the above recommendations.

H. Concrete subfloor must be clean and free of all foreign materials or objects including, but not limited to, curing compounds and sealers.

I. Fill cracks, grooves, voids, depressions, and other minor imperfections. Follow the manufacturer's directions. Moveable joints must be treated utilizing specific transitioning joint devices depending upon the architect's recommendations. Follow current ASTM F710 guidelines for the preparation of concrete slabs to receive resilient flooring.

J. Refer to ACI 302.2R "Guidelines for Concrete Slabs that Receive Moisture-Sensitive Flooring Materials" for concrete design and construction.

K. Concrete slab shall be fortified with continual steel reinforcement. Fiber reinforcement alone shall not be considered adequate fortification.

1.6 *WARRANTY*

A. Special Limited Warranty:
   1. Manufacturer's standard form in which manufacturer agrees to repair or replace sports flooring including labor that fails within specified warranty period.

B. Material warranty must be direct from the product manufacturer.
   1. Material warranties must come from original manufacturer or division thereof. Private label warranties from distributors or brokers are not valid. Supply original point of manufacturing upon request.

C. Failures include, but are not limited to, the following:
   1. Material manufacturing defects.
   2. Surface wear and deterioration to the point of wear-through of wear layer per ASTM F410/ASTM F1303.
   3. Failure due to substrate moisture exposure exceeding 98 percent relative humidity when tested according to ASTM F2170.

D. Warranty Period:
   1. For material defects and surface wear-through: **25** years from date of substantial completion.
   2. For moisture vapor tolerance: **25** years from date of substantial completion.

E. Installer's Limited Warranty:
   1. Installer's standard form in which installer agrees to repair or replace sports flooring that fails due to poor workmanship or faulty installation within the specified warranty period.
   2. Warranty Period: 2 years from date of substantial completion.

1.7 *ADDITIONAL MATERIALS*

A. Furnish to the owner additional materials containing a total of at least 1% of each different color or design of the indoor resilient athletic surfacing used on the project.

1.8 *LEED™ CERTIFICATION*

A. The indoor resilient athletic surfacing should be able to help this facility to achieve points towards *LEED™ certification.* Flooring system must be certified by FloorScore.
B. LEED categories positively affected by the indoor resilient athletic surfacing:

LEED™ V4 Credit		Contribution
Materials & Resources: Building Product Disclosure & Optimization (BPDO)		
MRc3: Sourcing of Raw Materials	Options 1 & 2	2 Points
MRc4: Material Ingredients	Option 1	1 Point
MRc5: Construction and Demolition Management	Reclamation and Recycling	ReStart® Program
Indoor Environmental Quality		
EQc2: Low-Emitting Materials	TVOC: 0.5 mg/m3 or less	FloorScore®

PART 2 - PRODUCTS

2.1 *MANUFACTURERS*

A. The basis of the design for the indoor resilient multipurpose surfacing is Omnisports PurePlay as manufactured by Tarkett.
B. All other installation accessories and related components must be either made or approved by the indoor resilient athletic surfacing manufacturer.
C. Other products may be approved as equal if deemed qualified and submitted in accordance with the General Conditions.
D. Test reports confirming compliance from an independent sports laboratory must be provided along with samples, technical data, installation, maintenance, and warranty prior to acceptance as an alternative product.

2.2 *MATERIALS*

A. Omnisports PurePlay - Prefabricated sport surface 9.4 mm (3/8”) with wood flooring design and slightly textured embossed surface as supplied by Tarkett.
   1. Embossing of wood design and solid colors must be the same; varying embossing or surface textures will not be allowed.
   2. Printing of wood design shall closely resemble standard wood strip flooring in size, color, board length, and grain appearance.
   3. The wood design shall be protected by a clear layer of pure PVC (Polyvinyl Chloride) and TopClean xp, a factory-applied UV cured urethane treatment.
   4. Intermediate layers shall be fortified with a non-woven fiberglass grid for increased dimensional stability.
   5. The foam force reduction layer shall be high-density closed cell PVC foam with honeycomb embossing, and is applied in one continuous manufacturing process.
   6. Laminated or adhered foam layers will not be allowed.
   7. Field constructed products will not be accepted.

A. Physical properties of the indoor resilient athletic surfacing shall conform to the following minimums:

Width	—	6’ 6” (2 m)
Length	—	85’ (25.9m) approx.
Wear Layer	—	2 mm
Total Thickness	—	9.4 mm
Wear Layer	Type 1– Grade 1	ASTM F1303/F410
Vertical Deformation	PASSED	ASTM F2772
Rolling Load	PASSED	0.30 (EN 1569 {11/1999})
Surface Finish Effect	PASSED	ASTM F2772 (80 – 110)
Chemical Resistance	Excellent	ASTM F925
Impact Resistance	PASSED	EN 1517
Abrasion Resistance	PASSED	0.10 (EN ISO 5470-1 {06/1999})
Static Load Limit	PASSED	ASTM F970- Load 175 Lbs
Sound Insulation	Excellent	+/= 19 dB (ISO 717/2)
In-Room Sound Insulation	Excellent	61dB (NF S31-074)
Ball Rebound	PASSED	ASTM F2772 > 90%
Force Reduction	PASSED	ASTM F2772 Class 3
Fire Rating	PASSED	ASTM E648 Class 1
Microbial Assays Test	No Growth	G21 ASTM - Backing
Asthma and Allergy Friendly™	ASP: 05-01/101	Certified Compliant
Phthalate-free technology	—	YES
REACH Compliant	—	YES
Heavy Metals	—	NO
ISO 9001	—	YES
ISO 14001	—	YES

1. Color: As available from the indoor resilient athletic surfacing manufacturer’s standard range.
2. Hardwood Design Series: High definition printing for a realistic wood surface appearance as available from the indoor resilient athletic surfacing manufacturer’s standard range.
3. Texture: Texture to remain consistent between solid colors and wood design when blending colors.

C. Welding Rod: As supplied by the indoor resilient athletic surfacing manufacturer or supplier.
   1. Color to blend with the indoor resilient athletic surfacing color or design.
   2. All seams shall be welded to create a monolithic and impermeable surface.

D. Adhesive: As approved by the indoor resilient athletic surfacing manufacturer.

E. Game Line Paint and Primer: As approved by the indoor resilient athletic surfacing manufacturer.

PART 3 - EXECUTION

3.1 *EXAMINATION*

A. It is the responsibility of the general contractor/construction manager to ensure that project/site conditions are acceptable for the installation of the indoor resilient athletic flooring.
B. Verify that the area in which the indoor resilient athletic surfacing will be installed is dry and weather tight. Verify that permanent heat, light and ventilation are installed and operable.
C. Verify that all other work that could cause damage, dirt and dust or interrupt the normal pace of the indoor resilient athletic flooring installation is completed or suspended.
D. Verify that there is a stable room temperature of at least 65◦F.
E. Verify that there are no foreign materials or objects on the subfloor and that the subfloor is clean and ready for installation.
F. *Direct Full Spread Adhering to Concrete Subfloor HS Sports Spray : moisture content less than 90% RH when tested per ASTM F2170.*
G. Follow Fieldturf USA, Inc. installation recommendations.
H. Do not average the results of the tests. Report all field test results in writing to the General Contractor, Architect, and End User prior to installation.
I. Verify that the concrete subfloor surface pH level is within the 7 - 11 range.
J. Document the results confirming the slab is within manufacturer's tolerances for slab deviation.

3.2 *PREPARATION OF SURFACES*

A. Sand the entire surface of the concrete slab.
B. Sweep the concrete slab so as to remove all dirt and dust. If a sweeping compound is to be used it must be a sweeping compound that does not contain oil or other items that may inhibit the adhesive bond.
C. Slab must be dust free. In the event that dust impairs adhesive bond, priming the slab prior to application of adhesive may be necessary. Follow installation guidelines.
D. Follow OSHA guidelines.

3.3 *INSTALLATION*

A. The installation area shall be closed to all traffic and activity for a period to be set by the indoor resilient athletic surfacing installer. The indoor resilient athletic surfacing installation shall not begin until the installer is familiar with the existing conditions.
B. All necessary precautions should be taken to minimize noise, smell, dust, the use of hazardous materials and any other items that may inconvenience others.
C. Install the indoor resilient athletic surfacing in strict accordance with the indoor resilient athletic surfacing manufacturer's written instructions.
D. Install the indoor resilient athletic surfacing minimizing cross seams. Provide a seam diagram during the submittal process for approval prior to installation. Vinyl Sheet Flooring Seams: Comply with ASTM F 1516. Rout joints and heat weld to permanently and seamlessly fuse sections together.
E. Paint game lines using approved game line paint primer and game line paint in strict accordance with the game line paint manufacturer's instructions.
F. Install appropriate threshold plates or transition strips where necessary.

3.5 *CLEANING*

A. Remove all unused materials, tools, and equipment and dispose of any debris properly. Clean the indoor resilient athletic surfacing in accordance with the manufacturer's instructions.

3.6 *PROTECTION*

A. If required, protect the indoor resilient athletic surfacing from damage using coverings approved by the manufacturer until acceptance of work by the customer or their authorized representative.

3.7 *RELATED STANDARDS AND GUIDELINES*

A. ASTM F2170 "Standard Test Method for Determining Relative Humidity In Concrete Floor Slabs Using In-Situ Probes"
B. ASTM F710 "Standard Practice for Preparing Concrete Floors to Receive Resilient Flooring"
C. ACI 302.2R-06 "Guideline for Concrete Slabs that Receive Moisture-Sensitive Flooring Materials"
D. ASTM F2772-11 "Standard Specification for Athletic Performance Properties of Indoor Sports Floor Systems"

END OF SECTION

SECTION 09 65 66
ARCHITECTURAL SPECIFICATIONS FOR INDOOR RESILIENT ATHLETIC SURFACING

PART 1 – GENERAL

1.1 *SECTION INCLUDES*

A. Supply and installation of the indoor resilient multipurpose surfacing
B. Application of the game lines
C. References for the correct construction and preparation of concrete slabs to receive resilient flooring.

1.2 *SUBMITTALS*

A. Product Data:
   1. Manufacturer's promotional brochures, specifications and installation instructions
B. Manufacturer Certifications:
   1. Provide certification that accurately identifies the Original Equipment Manufacturer (OEM) of flooring furnished for this project including manufacturer's name, address and factory location.
   2. Suppliers of private label flooring for this project must identify themselves as such and fully disclose the OEM information listed above.
   3. All "manufacturer" requirements in these specifications must be complied with by the OEM, including warranties, certifications, qualifications, product data, test results, environmental requirements, performance data, etc.
C. Samples:
   1. Submit for selection and approval three (3) sets of the indoor resilient multipurpose surfacing, manufacturer's brochures, samples or sample boards of all of the available colors, textures and styles.
   2. Submit color samples of all the available game line paint colors for selection and approval.
D. Closeout Submittals:
   1. Submit three (3) copies of the indoor resilient multipurpose surfacing and manufacturer's maintenance instructions.
   2. Submit three (3) copies of the material and installation warranties as specified.

1.3 *QUALITY ASSURANCE*

A. Qualifications:
   1. The indoor resilient multipurpose surfacing shall have been actively marketed for a minimum of ten (10) years.
   2. The indoor resilient multipurpose surfacing shall be manufactured in an ISO 9001 certified plant.
   3. The indoor resilient multipurpose surfacing shall be manufactured in an ISO 14001 certified plant.
   4. The indoor resilient multipurpose surfacing supplier shall be an established firm, experienced in the field, and competent in the techniques required by the manufacturer.
   5. The installer of the indoor resilient multipurpose surfacing shall have a minimum of five (5) years of experience in the field installing indoor resilient multipurpose surfacing and have worked on at least five (5) projects of similar size, type and complexity.

B. Certifications:
   1. Installer to submit the indoor resilient athletic surfacing manufacturer's or distributor's certification attesting that they are an approved installer of the indoor resilient multipurpose surfacing.
   2. The ind**o**or resilient multipurpose surfacing manufacturer to submit official ISO 9001 certification for the facility in which the indoor resilient multipurpose surfacing is manufactured.

C. Testing:
   Tests shall be relative for multi-purpose use with certificates from independent testing resources to be made available upon request. Test results shall be performed according to ASTM standard testing procedures including ASTM F2772 "Standard Specification for Athletic Performance Properties of Indoor Sports Floor Systems".

1.4 *DELIVERY, STORAGE AND HANDLING*

A. Delivery:
   Material shall not be delivered until all related work is in place and finished and/or proper storage facilities and conditions can be provided and guaranteed stable according to FieldTurf USA, Inc. recommendations.

B. Storage:
   1. Store the material in a secure, clean and dry location.
   2. Maintain temperature between 55° and 85° Fahrenheit.
   3. Store the indoor resilient athletic surfacing rolls in an upright position on a smooth flat surface immediately upon delivery to jobsite.
   4. Rolls shipped in rigid protective cardboard containers can be laid horizontally prior to unpacking and installation.

1.5 *PROJECT/SITE CONDITIONS*

A. It is the responsibility of the general contractor/construction manager to maintain project/site conditions acceptable for the installation of the indoor resilient multipurpose flooring.

B. The area in which the indoor resilient multipurpose surfacing will be installed shall be dry and weather tight. Permanent heat, light and ventilation shall be installed and operable.

C. All other trades shall have completed their work prior to the installation of the resilient athletic flooring. The general contractor or construction manager shall maintain a secure and clean working environment before, during and after the installation.

D. Maintain a stable room temperature of at least 65°F for a minimum of one (1) week prior to, during and thereafter installation.

E. An effective low-permeance vapor barrier is placed directly beneath the concrete subfloor. For "on" or "below grade" installations, it is recommended to provide a permanent vapor barrier resistant to long term hydrostatic pressure/moisture exposure. Protrusions should be sealed to prevent moisture migration into the slab. Moisture should not be allowed to enter the slab after the completed construction.

F. Concrete subfloor surface pH level within the 7 to 11 range dependent upon installation type.

G. Concrete subfloor should be no greater than 1/8" within a 10 ft diameter. This tolerance can be measured in accordance with ASTM E1155. A specified (F_F) of 50 and an (F_L) of 30 should reach this degree of floor flatness and floor level. There is no numerical correlation between F numbers and the deviation from the straight

edge. However, the above specified numbers should achieve a flat floor with minimal deviation in the slab. Reference ACI 117 and ACI 302.1R. The general contractor should provide a certificate of compliance with the above recommendations.

H. Concrete subfloor must be clean and free of all foreign materials or objects including, but not limited to, curing compounds and sealers.

I. Fill cracks, grooves, voids, depressions, and other minor imperfections. Follow the manufacturer's directions. Moveable joints must be treated utilizing specific transitioning joint devices depending upon the architect's recommendations. Follow current ASTM F710 guidelines for the preparation of concrete slabs to receive resilient flooring.

J. Refer to ACI 302.2R "Guidelines for Concrete Slabs that Receive Moisture-Sensitive Flooring Materials" for concrete design and construction.

K. Concrete slab shall be fortified with continual steel reinforcement. Fiber reinforcement alone shall not be considered adequate fortification.

1.6 *WARRANTY*

A. Special Limited Warranty:
   1. Manufacturer's standard form in which manufacturer agrees to repair or replace sports flooring including labor that fails within specified warranty period.

B. Material warranty must be direct from the product manufacturer.
   1. Material warranties must come from original manufacturer or division thereof. Private label warranties from distributors or brokers are not valid. Supply original point of manufacturing upon request.

C. Failures include, but are not limited to, the following:
   1. Material manufacturing defects.
   2. Surface wear and deterioration to the point of wear-through of wear layer per ASTM F410/ASTM F1303.
   3. Failure due to substrate moisture exposure exceeding 98 percent relative humidity when tested according to ASTM F2170.

D. Warranty Period:
   1. For material defects and surface wear-through: **25** years from date of substantial completion.
   2. For moisture vapor tolerance: **25** years from date of substantial completion.

E. Installer's Limited Warranty:
   1. Installer's standard form in which installer agrees to repair or replace sports flooring that fails due to poor workmanship or faulty installation within the specified warranty period.
   2. Warranty Period: 2 years from date of substantial completion.

1.7 *ADDITIONAL MATERIALS*

A. Furnish to the owner additional materials containing a total of at least 1% of each different color or design of the indoor resilient athletic surfacing used on the project.

1.8 *LEED™ CERTIFICATION*

A. The indoor resilient athletic surfacing should be able to help this facility to achieve points towards *LEED™ certification.* Flooring system must be certified by FloorScore.
B. LEED categories positively affected by the indoor resilient athletic surfacing:

LEED™ V4 Credit		Contribution
Materials & Resources: Building Product Disclosure & Optimization (BPDO)		
MRc3: Sourcing of Raw Materials	Options 1 & 2	2 Points
MRc4: Material Ingredients	Option 1	1 Point
MRc5: Construction and Demolition Management	Reclamation and Recycling	ReStart® Program
Indoor Environmental Quality		
EQc2: Low-Emitting Materials	TVOC: 0.5 mg/m3 or less	FloorScore®

PART 2 - PRODUCTS

2.1 *MANUFACTURERS*

A. The basis of the design for the indoor resilient multipurpose surfacing is Omnisports PurePlay as manufactured by Tarkett.
B. All other installation accessories and related components must be either made or approved by the indoor resilient athletic surfacing manufacturer.
C. Other products may be approved as equal if deemed qualified and submitted in accordance with the General Conditions.
D. Test reports confirming compliance from an independent sports laboratory must be provided along with samples, technical data, installation, maintenance, and warranty prior to acceptance as an alternative product.

2.2 *MATERIALS*

A. Omnisports PurePlay - Prefabricated sport surface 9.4 mm (3/8”) with wood flooring design and slightly textured embossed surface as supplied by Tarkett.
   1. Embossing of wood design and solid colors must be the same; varying embossing or surface textures will not be allowed.
   2. Printing of wood design shall closely resemble standard wood strip flooring in size, color, board length, and grain appearance.
   3. The wood design shall be protected by a clear layer of pure PVC (Polyvinyl Chloride) and TopClean xp, a factory-applied UV cured urethane treatment.
   4. Intermediate layers shall be fortified with a non-woven fiberglass grid for increased dimensional stability.
   5. The foam force reduction layer shall be high-density closed cell PVC foam with honeycomb embossing, and is applied in one continuous manufacturing process.
   6. Laminated or adhered foam layers will not be allowed.
   7. Field constructed products will not be accepted.

A. Physical properties of the indoor resilient athletic surfacing shall conform to the following minimums:

Width	—	6’ 6” (2 m)
Length	—	85’ (25.9m) approx.
Wear Layer	—	2 mm
Total Thickness	—	9.4 mm
Wear Layer	Type 1– Grade 1	ASTM F1303/F410
Vertical Deformation	PASSED	ASTM F2772
Rolling Load	PASSED	0.30 (EN 1569 {11/1999})
Surface Finish Effect	PASSED	ASTM F2772 (80 – 110)
Chemical Resistance	Excellent	ASTM F925
Impact Resistance	PASSED	EN 1517
Abrasion Resistance	PASSED	0.10 (EN ISO 5470-1 {06/1999})
Static Load Limit	PASSED	ASTM F970- Load 175 Lbs
Sound Insulation	Excellent	+/= 19 dB (ISO 717/2)
In-Room Sound Insulation	Excellent	61dB (NF S31-074)
Ball Rebound	PASSED	ASTM F2772 > 90%
Force Reduction	PASSED	ASTM F2772 Class 3
Fire Rating	PASSED	ASTM E648 Class 1
Microbial Assays Test	No Growth	G21 ASTM - Backing
Asthma and Allergy Friendly™	ASP: 05-01/101	Certified Compliant
Phthalate-free technology	—	YES
REACH Compliant	—	YES
Heavy Metals	—	NO
ISO 9001	—	YES
ISO 14001	—	YES

1. Color: As available from the indoor resilient athletic surfacing manufacturer’s standard range.
2. Hardwood Design Series: High definition printing for a realistic wood surface appearance as available from the indoor resilient athletic surfacing manufacturer’s standard range.
3. Texture: Texture to remain consistent between solid colors and wood design when blending colors.

C. Welding Rod: As supplied by the indoor resilient athletic surfacing manufacturer or supplier.
   1. Color to blend with the indoor resilient athletic surfacing color or design.
   2. All seams shall be welded to create a monolithic and impermeable surface.

D. Adhesive: As approved by the indoor resilient athletic surfacing manufacturer.

E. Game Line Paint and Primer: As approved by the indoor resilient athletic surfacing manufacturer.

PART 3 - EXECUTION

3.1 *EXAMINATION*

A. It is the responsibility of the general contractor/construction manager to ensure that project/site conditions are acceptable for the installation of the indoor resilient athletic flooring.
B. Verify that the area in which the indoor resilient athletic surfacing will be installed is dry and weather tight. Verify that permanent heat, light and ventilation are installed and operable.
C. Verify that all other work that could cause damage, dirt and dust or interrupt the normal pace of the indoor resilient athletic flooring installation is completed or suspended.
D. Verify that there is a stable room temperature of at least 65◦F.
E. Verify that there are no foreign materials or objects on the subfloor and that the subfloor is clean and ready for installation.
F. *Direct Full Spread Adhering to Concrete Subfloor Multi-Poxy : moisture content less than 98% RH when tested per ASTM F2170.*
G. Follow Fieldturf USA, Inc. installation recommendations.
H. Do not average the results of the tests. Report all field test results in writing to the General Contractor, Architect, and End User prior to installation.
I. Verify that the concrete subfloor surface pH level is within the 7 - 11 range.
J. Document the results confirming the slab is within manufacturer's tolerances for slab deviation.

3.2 *PREPARATION OF SURFACES*

A. Sand the entire surface of the concrete slab.
B. Sweep the concrete slab so as to remove all dirt and dust. If a sweeping compound is to be used it must be a sweeping compound that does not contain oil or other items that may inhibit the adhesive bond.
C. Slab must be dust free. In the event that dust impairs adhesive bond, priming the slab prior to application of adhesive may be necessary. Follow installation guidelines.
D. Follow OSHA guidelines.

3.3 *INSTALLATION*

A. The installation area shall be closed to all traffic and activity for a period to be set by the indoor resilient athletic surfacing installer. The indoor resilient athletic surfacing installation shall not begin until the installer is familiar with the existing conditions.
B. All necessary precautions should be taken to minimize noise, smell, dust, the use of hazardous materials and any other items that may inconvenience others.
C. Install the indoor resilient athletic surfacing in strict accordance with the indoor resilient athletic surfacing manufacturer's written instructions.
D. Install the indoor resilient athletic surfacing minimizing cross seams. Provide a seam diagram during the submittal process for approval prior to installation. Vinyl Sheet Flooring Seams: Comply with ASTM F 1516. Rout joints and heat weld to permanently and seamlessly fuse sections together.
E. Paint game lines using approved game line paint primer and game line paint in strict accordance with the game line paint manufacturer's instructions.
F. Install appropriate threshold plates or transition strips where necessary.

3.5 *CLEANING*

A. Remove all unused materials, tools, and equipment and dispose of any debris properly. Clean the indoor resilient athletic surfacing in accordance with the manufacturer's instructions.

3.6 *PROTECTION*

A. If required, protect the indoor resilient athletic surfacing from damage using coverings approved by the manufacturer until acceptance of work by the customer or their authorized representative.

3.7 *RELATED STANDARDS AND GUIDELINES*

A. ASTM F2170 "Standard Test Method for Determining Relative Humidity In Concrete Floor Slabs Using In-Situ Probes"
B. ASTM F710 "Standard Practice for Preparing Concrete Floors to Receive Resilient Flooring"
C. ACI 302.2R-06 "Guideline for Concrete Slabs that Receive Moisture-Sensitive Flooring Materials"
D. ASTM F2772-11 "Standard Specification for Athletic Performance Properties of Indoor Sports Floor Systems"

END OF SECTION

SECTION 09 65 66
ARCHITECTURAL SPECIFICATIONS FOR INDOOR RESILIENT ATHLETIC SURFACING

PART 1 – GENERAL

1.1 *SECTION INCLUDES*

A. Supply and installation of the indoor resilient multipurpose surfacing
B. Application of the game lines
C. References for the correct construction and preparation of concrete slabs to receive resilient flooring.

1.2 *SUBMITTALS*

A. Product Data:
   1. Manufacturer's promotional brochures, specifications and installation instructions
B. Manufacturer Certifications:
   1. Provide certification that accurately identifies the Original Equipment Manufacturer (OEM) of flooring furnished for this project including manufacturer's name, address and factory location.
   2. Suppliers of private label flooring for this project must identify themselves as such and fully disclose the OEM information listed above.
   3. All "manufacturer" requirements in these specifications must be complied with by the OEM, including warranties, certifications, qualifications, product data, test results, environmental requirements, performance data, etc.
C. Samples:
   1. Submit for selection and approval three (3) sets of the indoor resilient multipurpose surfacing, manufacturer's brochures, samples or sample boards of all of the available colors, textures and styles.
   2. Submit color samples of all the available game line paint colors for selection and approval.
D. Closeout Submittals:
   1. Submit three (3) copies of the indoor resilient multipurpose surfacing and manufacturer's maintenance instructions.
   2. Submit three (3) copies of the material and installation warranties as specified.

1.3 *QUALITY ASSURANCE*

A. Qualifications:
   1. The indoor resilient multipurpose surfacing shall have been actively marketed for a minimum of ten (10) years.
   2. The indoor resilient multipurpose surfacing shall be manufactured in an ISO 9001 certified plant.
   3. The indoor resilient multipurpose surfacing shall be manufactured in an ISO 14001 certified plant.
   4. The indoor resilient multipurpose surfacing supplier shall be an established firm, experienced in the field, and competent in the techniques required by the manufacturer.
   5. The installer of the indoor resilient multipurpose surfacing shall have a minimum of five (5) years of experience in the field installing indoor resilient multipurpose surfacing and have worked on at least five (5) projects of similar size, type and complexity.

B. Certifications:
   1. Installer to submit the indoor resilient athletic surfacing manufacturer's or distributor's certification attesting that they are an approved installer of the indoor resilient multipurpose surfacing.
   2. The ind**o**or resilient multipurpose surfacing manufacturer to submit official ISO 9001 certification for the facility in which the indoor resilient multipurpose surfacing is manufactured.

C. Testing:
   Tests shall be relative for multi-purpose use with certificates from independent testing resources to be made available upon request. Test results shall be performed according to ASTM standard testing procedures including ASTM F2772 "Standard Specification for Athletic Performance Properties of Indoor Sports Floor Systems".

1.4 *DELIVERY, STORAGE AND HANDLING*

A. Delivery:
   Material shall not be delivered until all related work is in place and finished and/or proper storage facilities and conditions can be provided and guaranteed stable according to FieldTurf USA, Inc. recommendations.

B. Storage:
   1. Store the material in a secure, clean and dry location.
   2. Maintain temperature between 55° and 85° Fahrenheit.
   3. Store the indoor resilient athletic surfacing rolls in an upright position on a smooth flat surface immediately upon delivery to jobsite.
   4. Rolls shipped in rigid protective cardboard containers can be laid horizontally prior to unpacking and installation.

1.5 *PROJECT/SITE CONDITIONS*

A. It is the responsibility of the general contractor/construction manager to maintain project/site conditions acceptable for the installation of the indoor resilient multipurpose flooring.

B. The area in which the indoor resilient multipurpose surfacing will be installed shall be dry and weather tight. Permanent heat, light and ventilation shall be installed and operable.

C. All other trades shall have completed their work prior to the installation of the resilient athletic flooring. The general contractor or construction manager shall maintain a secure and clean working environment before, during and after the installation.

D. Maintain a stable room temperature of at least 65°F for a minimum of one (1) week prior to, during and thereafter installation.

E. An effective low-permeance vapor barrier is placed directly beneath the concrete subfloor. For "on" or "below grade" installations, it is recommended to provide a permanent vapor barrier resistant to long term hydrostatic pressure/moisture exposure. Protrusions should be sealed to prevent moisture migration into the slab. Moisture should not be allowed to enter the slab after the completed construction.

F. Concrete subfloor surface pH level within the 7 to 11 range dependent upon installation type.

G. Concrete subfloor should be no greater than 1/8" within a 10 ft diameter. This tolerance can be measured in accordance with ASTM E1155. A specified (F_F) of 50 and an (F_L) of 30 should reach this degree of floor flatness and floor level. There is no numerical correlation between F numbers and the deviation from the straight

edge. However, the above specified numbers should achieve a flat floor with minimal deviation in the slab. Reference ACI 117 and ACI 302.1R. The general contractor should provide a certificate of compliance with the above recommendations.

H. Concrete subfloor must be clean and free of all foreign materials or objects including, but not limited to, curing compounds and sealers.

I. Fill cracks, grooves, voids, depressions, and other minor imperfections. Follow the manufacturer's directions. Moveable joints must be treated utilizing specific transitioning joint devices depending upon the architect's recommendations. Follow current ASTM F710 guidelines for the preparation of concrete slabs to receive resilient flooring.

J. Refer to ACI 302.2R "Guidelines for Concrete Slabs that Receive Moisture-Sensitive Flooring Materials" for concrete design and construction.

K. Concrete slab shall be fortified with continual steel reinforcement. Fiber reinforcement alone shall not be considered adequate fortification.

1.6 *WARRANTY*

A. Special Limited Warranty:
   1. Manufacturer's standard form in which manufacturer agrees to repair or replace sports flooring including labor that fails within specified warranty period.

B. Material warranty must be direct from the product manufacturer.
   1. Material warranties must come from original manufacturer or division thereof. Private label warranties from distributors or brokers are not valid. Supply original point of manufacturing upon request.

C. Failures include, but are not limited to, the following:
   1. Material manufacturing defects.
   2. Surface wear and deterioration to the point of wear-through of wear layer per ASTM F410/ASTM F1303.
   3. Failure due to substrate moisture exposure exceeding 98 percent relative humidity when tested according to ASTM F2170.

D. Warranty Period:
   1. For material defects and surface wear-through: **25** years from date of substantial completion.
   2. For moisture vapor tolerance: **25** years from date of substantial completion.

E. Installer's Limited Warranty:
   1. Installer's standard form in which installer agrees to repair or replace sports flooring that fails due to poor workmanship or faulty installation within the specified warranty period.
   2. Warranty Period: 2 years from date of substantial completion.

1.7 *ADDITIONAL MATERIALS*

A. Furnish to the owner additional materials containing a total of at least 1% of each different color or design of the indoor resilient athletic surfacing used on the project.

1.8 *LEED™ CERTIFICATION*

A. The indoor resilient athletic surfacing should be able to help this facility to achieve points towards *LEED™ certification.* Flooring system must be certified by FloorScore.
B. LEED categories positively affected by the indoor resilient athletic surfacing:

LEED™ V4 Credit		Contribution
Materials & Resources: Building Product Disclosure & Optimization (BPDO)		
MRc3: Sourcing of Raw Materials	Options 1 & 2	2 Points
MRc4: Material Ingredients	Option 1	1 Point
MRc5: Construction and Demolition Management	Reclamation and Recycling	ReStart® Program
Indoor Environmental Quality		
EQc2: Low-Emitting Materials	TVOC: 0.5 mg/m3 or less	FloorScore®

PART 2 - PRODUCTS

2.1 *MANUFACTURERS*

A. The basis of the design for the indoor resilient multipurpose surfacing is Omnisports PurePlay as manufactured by Tarkett.
B. All other installation accessories and related components must be either made or approved by the indoor resilient athletic surfacing manufacturer.
C. Other products may be approved as equal if deemed qualified and submitted in accordance with the General Conditions.
D. Test reports confirming compliance from an independent sports laboratory must be provided along with samples, technical data, installation, maintenance, and warranty prior to acceptance as an alternative product.

2.2 *MATERIALS*

A. Omnisports PurePlay - Prefabricated sport surface 9.4 mm (3/8”) with wood flooring design and slightly textured embossed surface as supplied by Tarkett.
   1. Embossing of wood design and solid colors must be the same; varying embossing or surface textures will not be allowed.
   2. Printing of wood design shall closely resemble standard wood strip flooring in size, color, board length, and grain appearance.
   3. The wood design shall be protected by a clear layer of pure PVC (Polyvinyl Chloride) and TopClean xp, a factory-applied UV cured urethane treatment.
   4. Intermediate layers shall be fortified with a non-woven fiberglass grid for increased dimensional stability.
   5. The foam force reduction layer shall be high-density closed cell PVC foam with honeycomb embossing, and is applied in one continuous manufacturing process.
   6. Laminated or adhered foam layers will not be allowed.
   7. Field constructed products will not be accepted.

A. Physical properties of the indoor resilient athletic surfacing shall conform to the following minimums:

Width	—	6’ 6” (2 m)
Length	—	85’ (25.9m) approx.
Wear Layer	—	2 mm
Total Thickness	—	9.4 mm
Wear Layer	Type 1– Grade 1	ASTM F1303/F410
Vertical Deformation	PASSED	ASTM F2772
Rolling Load	PASSED	0.30 (EN 1569 {11/1999})
Surface Finish Effect	PASSED	ASTM F2772 (80 – 110)
Chemical Resistance	Excellent	ASTM F925
Impact Resistance	PASSED	EN 1517
Abrasion Resistance	PASSED	0.10 (EN ISO 5470-1 {06/1999})
Static Load Limit	PASSED	ASTM F970- Load 175 Lbs
Sound Insulation	Excellent	+/= 19 dB (ISO 717/2)
In-Room Sound Insulation	Excellent	61dB (NF S31-074)
Ball Rebound	PASSED	ASTM F2772 > 90%
Force Reduction	PASSED	ASTM F2772 Class 3
Fire Rating	PASSED	ASTM E648 Class 1
Microbial Assays Test	No Growth	G21 ASTM - Backing
Asthma and Allergy Friendly™	ASP: 05-01/101	Certified Compliant
Phthalate-free technology	—	YES
REACH Compliant	—	YES
Heavy Metals	—	NO
ISO 9001	—	YES
ISO 14001	—	YES

1. Color: As available from the indoor resilient athletic surfacing manufacturer’s standard range.
2. Hardwood Design Series: High definition printing for a realistic wood surface appearance as available from the indoor resilient athletic surfacing manufacturer’s standard range.
3. Texture: Texture to remain consistent between solid colors and wood design when blending colors.

C. Welding Rod: As supplied by the indoor resilient athletic surfacing manufacturer or supplier.
   1. Color to blend with the indoor resilient athletic surfacing color or design.
   2. All seams shall be welded to create a monolithic and impermeable surface.

D. Adhesive: As approved by the indoor resilient athletic surfacing manufacturer.

E. Game Line Paint and Primer: As approved by the indoor resilient athletic surfacing manufacturer.

PART 3 - EXECUTION

3.1 *EXAMINATION*

A. It is the responsibility of the general contractor/construction manager to ensure that project/site conditions are acceptable for the installation of the indoor resilient athletic flooring.
B. Verify that the area in which the indoor resilient athletic surfacing will be installed is dry and weather tight. Verify that permanent heat, light and ventilation are installed and operable.
C. Verify that all other work that could cause damage, dirt and dust or interrupt the normal pace of the indoor resilient athletic flooring installation is completed or suspended.
D. Verify that there is a stable room temperature of at least 65◦F.
E. Verify that there are no foreign materials or objects on the subfloor and that the subfloor is clean and ready for installation.
F. *Direct Full Spread Adhering to Concrete Subfloor Multi-Set : moisture content less than 83% RH when tested per ASTM F2170.*
G. Follow Fieldturf USA, Inc. installation recommendations.
H. Do not average the results of the tests. Report all field test results in writing to the General Contractor, Architect, and End User prior to installation.
I. Verify that the concrete subfloor surface pH level is within the 7 - 11 range.
J. Document the results confirming the slab is within manufacturer's tolerances for slab deviation.

3.2 *PREPARATION OF SURFACES*

A. Sand the entire surface of the concrete slab.
B. Sweep the concrete slab so as to remove all dirt and dust. If a sweeping compound is to be used it must be a sweeping compound that does not contain oil or other items that may inhibit the adhesive bond.
C. Slab must be dust free. In the event that dust impairs adhesive bond, priming the slab prior to application of adhesive may be necessary. Follow installation guidelines.
D. Follow OSHA guidelines.

3.3 *INSTALLATION*

A. The installation area shall be closed to all traffic and activity for a period to be set by the indoor resilient athletic surfacing installer. The indoor resilient athletic surfacing installation shall not begin until the installer is familiar with the existing conditions.
B. All necessary precautions should be taken to minimize noise, smell, dust, the use of hazardous materials and any other items that may inconvenience others.
C. Install the indoor resilient athletic surfacing in strict accordance with the indoor resilient athletic surfacing manufacturer's written instructions.
D. Install the indoor resilient athletic surfacing minimizing cross seams. Provide a seam diagram during the submittal process for approval prior to installation. Vinyl Sheet Flooring Seams: Comply with ASTM F 1516. Rout joints and heat weld to permanently and seamlessly fuse sections together.
E. Paint game lines using approved game line paint primer and game line paint in strict accordance with the game line paint manufacturer's instructions.
F. Install appropriate threshold plates or transition strips where necessary.

3.5 *CLEANING*

A. Remove all unused materials, tools, and equipment and dispose of any debris properly. Clean the indoor resilient athletic surfacing in accordance with the manufacturer's instructions.

3.6 *PROTECTION*

A. If required, protect the indoor resilient athletic surfacing from damage using coverings approved by the manufacturer until acceptance of work by the customer or their authorized representative.

3.7 *RELATED STANDARDS AND GUIDELINES*

A. ASTM F2170 "Standard Test Method for Determining Relative Humidity In Concrete Floor Slabs Using In-Situ Probes"
B. ASTM F710 "Standard Practice for Preparing Concrete Floors to Receive Resilient Flooring"
C. ACI 302.2R-06 "Guideline for Concrete Slabs that Receive Moisture-Sensitive Flooring Materials"
D. ASTM F2772-11 "Standard Specification for Athletic Performance Properties of Indoor Sports Floor Systems"

END OF SECTION

SECTION 09 65 66
ARCHITECTURAL SPECIFICATIONS FOR INDOOR RESILIENT ATHLETIC SURFACING

PART 1 – GENERAL

1.1 *SECTION INCLUDES*

A. Supply and installation of the indoor resilient multipurpose surfacing
B. Application of the game lines
C. References for the correct construction and preparation of concrete slabs to receive resilient flooring.

1.2 *SUBMITTALS*

A. Product Data:
   1. Manufacturer's promotional brochures, specifications and installation instructions
B. Manufacturer Certifications:
   1. Provide certification that accurately identifies the Original Equipment Manufacturer (OEM) of flooring furnished for this project including manufacturer's name, address and factory location.
   2. Suppliers of private label flooring for this project must identify themselves as such and fully disclose the OEM information listed above.
   3. All "manufacturer" requirements in these specifications must be complied with by the OEM, including warranties, certifications, qualifications, product data, test results, environmental requirements, performance data, etc.
C. Samples:
   1. Submit for selection and approval three (3) sets of the indoor resilient multipurpose surfacing, manufacturer's brochures, samples or sample boards of all of the available colors, textures and styles.
   2. Submit color samples of all the available game line paint colors for selection and approval.
D. Closeout Submittals:
   1. Submit three (3) copies of the indoor resilient multipurpose surfacing and manufacturer's maintenance instructions.
   2. Submit three (3) copies of the material and installation warranties as specified.

1.3 *QUALITY ASSURANCE*

A. Qualifications:
   1. The indoor resilient multipurpose surfacing shall have been actively marketed for a minimum of ten (10) years.
   2. The indoor resilient multipurpose surfacing shall be manufactured in an ISO 9001 certified plant.
   3. The indoor resilient multipurpose surfacing shall be manufactured in an ISO 14001 certified plant.
   4. The indoor resilient multipurpose surfacing supplier shall be an established firm, experienced in the field, and competent in the techniques required by the manufacturer.
   5. The installer of the indoor resilient multipurpose surfacing shall have a minimum of five (5) years of experience in the field installing indoor resilient multipurpose surfacing and have worked on at least five (5) projects of similar size, type and complexity.

B. Certifications:
   1. Installer to submit the indoor resilient athletic surfacing manufacturer's or distributor's certification attesting that they are an approved installer of the indoor resilient multipurpose surfacing.
   2. The ind**o**or resilient multipurpose surfacing manufacturer to submit official ISO 9001 certification for the facility in which the indoor resilient multipurpose surfacing is manufactured.

C. Testing:
   Tests shall be relative for multi-purpose use with certificates from independent testing resources to be made available upon request. Test results shall be performed according to ASTM standard testing procedures including ASTM F2772 "Standard Specification for Athletic Performance Properties of Indoor Sports Floor Systems".

1.4 *DELIVERY, STORAGE AND HANDLING*

A. Delivery:
   Material shall not be delivered until all related work is in place and finished and/or proper storage facilities and conditions can be provided and guaranteed stable according to FieldTurf USA, Inc. recommendations.

B. Storage:
   1. Store the material in a secure, clean and dry location.
   2. Maintain temperature between 55° and 85° Fahrenheit.
   3. Store the indoor resilient athletic surfacing rolls in an upright position on a smooth flat surface immediately upon delivery to jobsite.
   4. Rolls shipped in rigid protective cardboard containers can be laid horizontally prior to unpacking and installation.

1.5 *PROJECT/SITE CONDITIONS*

A. It is the responsibility of the general contractor/construction manager to maintain project/site conditions acceptable for the installation of the indoor resilient multipurpose flooring.

B. The area in which the indoor resilient multipurpose surfacing will be installed shall be dry and weather tight. Permanent heat, light and ventilation shall be installed and operable.

C. All other trades shall have completed their work prior to the installation of the resilient athletic flooring. The general contractor or construction manager shall maintain a secure and clean working environment before, during and after the installation.

D. Maintain a stable room temperature of at least 65°F for a minimum of one (1) week prior to, during and thereafter installation.

E. An effective low-permeance vapor barrier is placed directly beneath the concrete subfloor. For "on" or "below grade" installations, it is recommended to provide a permanent vapor barrier resistant to long term hydrostatic pressure/moisture exposure. Protrusions should be sealed to prevent moisture migration into the slab. Moisture should not be allowed to enter the slab after the completed construction.

F. Concrete subfloor surface pH level within the 7 to 11 range dependent upon installation type.

G. Concrete subfloor should be no greater than 1/8" within a 10 ft diameter. This tolerance can be measured in accordance with ASTM E1155. A specified (F_F) of 50 and an (F_L) of 30 should reach this degree of floor flatness and floor level. There is no numerical correlation between F numbers and the deviation from the straight

edge. However, the above specified numbers should achieve a flat floor with minimal deviation in the slab. Reference ACI 117 and ACI 302.1R. The general contractor should provide a certificate of compliance with the above recommendations.

H. Concrete subfloor must be clean and free of all foreign materials or objects including, but not limited to, curing compounds and sealers.

I. Fill cracks, grooves, voids, depressions, and other minor imperfections. Follow the manufacturer's directions. Moveable joints must be treated utilizing specific transitioning joint devices depending upon the architect's recommendations. Follow current ASTM F710 guidelines for the preparation of concrete slabs to receive resilient flooring.

J. Refer to ACI 302.2R "Guidelines for Concrete Slabs that Receive Moisture-Sensitive Flooring Materials" for concrete design and construction.

K. Concrete slab shall be fortified with continual steel reinforcement. Fiber reinforcement alone shall not be considered adequate fortification.

1.6 *WARRANTY*

A. Special Limited Warranty:
   1. Manufacturer's standard form in which manufacturer agrees to repair or replace sports flooring including labor that fails within specified warranty period.

B. Material warranty must be direct from the product manufacturer.
   1. Material warranties must come from original manufacturer or division thereof. Private label warranties from distributors or brokers are not valid. Supply original point of manufacturing upon request.

C. Failures include, but are not limited to, the following:
   1. Material manufacturing defects.
   2. Surface wear and deterioration to the point of wear-through of wear layer per ASTM F410/ASTM F1303.
   3. Failure due to substrate moisture exposure exceeding 98 percent relative humidity when tested according to ASTM F2170.

D. Warranty Period:
   1. For material defects and surface wear-through: **25** years from date of substantial completion.
   2. For moisture vapor tolerance: **25** years from date of substantial completion.

E. Installer's Limited Warranty:
   1. Installer's standard form in which installer agrees to repair or replace sports flooring that fails due to poor workmanship or faulty installation within the specified warranty period.
   2. Warranty Period: 2 years from date of substantial completion.

1.7 *ADDITIONAL MATERIALS*

A. Furnish to the owner additional materials containing a total of at least 1% of each different color or design of the indoor resilient athletic surfacing used on the project.

1.8 *LEED™ CERTIFICATION*

A. The indoor resilient athletic surfacing should be able to help this facility to achieve points towards *LEED™ certification.* Flooring system must be certified by FloorScore.
B. LEED categories positively affected by the indoor resilient athletic surfacing:

LEED™ V4 Credit		Contribution
Materials & Resources: Building Product Disclosure & Optimization (BPDO)		
MRc3: Sourcing of Raw Materials	Options 1 & 2	2 Points
MRc4: Material Ingredients	Option 1	1 Point
MRc5: Construction and Demolition Management	Reclamation and Recycling	ReStart® Program
Indoor Environmental Quality		
EQc2: Low-Emitting Materials	TVOC: 0.5 mg/m3 or less	FloorScore®

PART 2 - PRODUCTS

2.1 *MANUFACTURERS*

A. The basis of the design for the indoor resilient multipurpose surfacing is Omnisports PurePlay as manufactured by Tarkett.
B. All other installation accessories and related components must be either made or approved by the indoor resilient athletic surfacing manufacturer.
C. Other products may be approved as equal if deemed qualified and submitted in accordance with the General Conditions.
D. Test reports confirming compliance from an independent sports laboratory must be provided along with samples, technical data, installation, maintenance, and warranty prior to acceptance as an alternative product.

2.2 *MATERIALS*

A. Omnisports PurePlay - Prefabricated sport surface 9.4 mm (3/8”) with wood flooring design and slightly textured embossed surface as supplied by Tarkett.
   1. Embossing of wood design and solid colors must be the same; varying embossing or surface textures will not be allowed.
   2. Printing of wood design shall closely resemble standard wood strip flooring in size, color, board length, and grain appearance.
   3. The wood design shall be protected by a clear layer of pure PVC (Polyvinyl Chloride) and TopClean xp, a factory-applied UV cured urethane treatment.
   4. Intermediate layers shall be fortified with a non-woven fiberglass grid for increased dimensional stability.
   5. The foam force reduction layer shall be high-density closed cell PVC foam with honeycomb embossing, and is applied in one continuous manufacturing process.
   6. Laminated or adhered foam layers will not be allowed.
   7. Field constructed products will not be accepted.

A. Physical properties of the indoor resilient athletic surfacing shall conform to the following minimums:

Width	—	6’ 6” (2 m)
Length	—	85’ (25.9m) approx.
Wear Layer	—	2 mm
Total Thickness	—	9.4 mm
Wear Layer	Type 1– Grade 1	ASTM F1303/F410
Vertical Deformation	PASSED	ASTM F2772
Rolling Load	PASSED	0.30 (EN 1569 {11/1999})
Surface Finish Effect	PASSED	ASTM F2772 (80 – 110)
Chemical Resistance	Excellent	ASTM F925
Impact Resistance	PASSED	EN 1517
Abrasion Resistance	PASSED	0.10 (EN ISO 5470-1 {06/1999})
Static Load Limit	PASSED	ASTM F970- Load 175 Lbs
Sound Insulation	Excellent	+/= 19 dB (ISO 717/2)
In-Room Sound Insulation	Excellent	61dB (NF S31-074)
Ball Rebound	PASSED	ASTM F2772 > 90%
Force Reduction	PASSED	ASTM F2772 Class 3
Fire Rating	PASSED	ASTM E648 Class 1
Microbial Assays Test	No Growth	G21 ASTM - Backing
Asthma and Allergy Friendly™	ASP: 05-01/101	Certified Compliant
Phthalate-free technology	—	YES
REACH Compliant	—	YES
Heavy Metals	—	NO
ISO 9001	—	YES
ISO 14001	—	YES

1. Color: As available from the indoor resilient athletic surfacing manufacturer’s standard range.
2. Hardwood Design Series: High definition printing for a realistic wood surface appearance as available from the indoor resilient athletic surfacing manufacturer’s standard range.
3. Texture: Texture to remain consistent between solid colors and wood design when blending colors.

C. Tarkolay – A high quality low permeance slip sheet vapor retarder designed to separate the installed system from the substrate below.
1. Tarkolay as manufactured by Tarkett can be used below, on, or above grade substrates that experience elevated moisture conditions.
2. Moisture tolerances shall have no limitation per ASTM F2170. Physical properties of the indoor resilient athletic surfacing shall conform to the following minimums:

Width	—	6’ 6” (2 m)
Length	—	147’7”’ (45 m) approx.
Total Thickness	—	1.3 mm
Dimensional Stability	PASSED	.01% (EN 1434)
Permeance	Excellent	<0.20 (ASTM E96

D. Welding Rod: As supplied by the indoor resilient athletic surfacing manufacturer or supplier.
   1. Color to blend with the indoor resilient athletic surfacing color or design.
   2. All seams shall be welded to create a monolithic and impermeable surface.
E. Adhesive: As approved by the indoor resilient athletic surfacing manufacturer.
F. Game Line Paint and Primer: As approved by the indoor resilient athletic surfacing manufacturer.

PART 3 - EXECUTION

3.1 *EXAMINATION*

A. It is the responsibility of the general contractor/construction manager to ensure that project/site conditions are acceptable for the installation of the indoor resilient athletic flooring.
B. Verify that the area in which the indoor resilient athletic surfacing will be installed is dry and weather tight. Verify that permanent heat, light and ventilation are installed and operable.
C. Verify that all other work that could cause damage, dirt and dust or interrupt the normal pace of the indoor resilient athletic flooring installation is completed or suspended.
D. Verify that there is a stable room temperature of at least 65◦F.
E. Verify that there are no foreign materials or objects on the subfloor and that the subfloor is clean and ready for installation.
F. *Installation with Tarkolay to Concrete Subfloor : moisture content no limitation when tested per ASTM F2170.*
G. Follow Fieldturf USA, Inc. installation recommendations.
H. Do not average the results of the tests. Report all field test results in writing to the General Contractor, Architect, and End User prior to installation.
I. Verify that the concrete subfloor surface pH level is within the 7 - 11 range.
J. Document the results indicating the slab is within manufacturer's tolerances for slab deviation.

3.2 *PREPARATION OF SURFACES*

A. Sand the entire surface of the concrete slab.
B. Sweep the concrete slab so as to remove all dirt and dust. If a sweeping compound is to be used it must be a sweeping compound that does not contain oil or other items that may inhibit the adhesive bond.
C. Slab must be dust free. In the event that dust impairs adhesive bond, priming the slab prior to application of adhesive may be necessary. Follow installation guidelines.
D. Follow OSHA guidelines.

3.3 *INSTALLATION*

A. The installation area shall be closed to all traffic and activity for a period to be set by the indoor resilient athletic surfacing installer. The indoor resilient athletic surfacing installation shall not begin until the installer is familiar with the existing conditions.
B. All necessary precautions should be taken to minimize noise, smell, dust, the use of hazardous materials and any other items that may inconvenience others.
C. Install the indoor resilient athletic surfacing in strict accordance with the indoor resilient athletic surfacing manufacturer's written instructions.
D. Install the indoor resilient athletic surfacing minimizing cross seams. Provide a seam diagram during the submittal process for approval prior to installation. Vinyl Sheet Flooring Seams: Comply with ASTM F 1516. Rout joints and heat weld to permanently and seamlessly fuse sections together.
E. Paint game lines using approved game line paint primer and game line paint in strict accordance with the game line paint manufacturer's instructions.
F. Install appropriate threshold plates or transition strips where necessary.

3.5 *CLEANING*

A. Remove all unused materials, tools, and equipment and dispose of any debris properly. Clean the indoor resilient athletic surfacing in accordance with the manufacturer's instructions.

3.6 *PROTECTION*

A. If required, protect the indoor resilient athletic surfacing from damage using coverings approved by the manufacturer until acceptance of work by the customer or their authorized representative.

3.7 *RELATED STANDARDS AND GUIDELINES*

A. ASTM F2170 "Standard Test Method for Determining Relative Humidity In Concrete Floor Slabs Using In-Situ Probes"
B. ASTM F710 "Standard Practice for Preparing Concrete Floors to Receive Resilient Flooring"
C. ACI 302.2R-06 "Guideline for Concrete Slabs that Receive Moisture-Sensitive Flooring Materials"
D. ASTM F2772-11 "Standard Specification for Athletic Performance Properties of Indoor Sports Floor Systems"

END OF SECTION

SECTION 09 65 66
ARCHITECTURAL SPECIFICATIONS FOR INDOOR RESILIENT ATHLETIC SURFACING

PART 1 – GENERAL

1.1 *SECTION INCLUDES*

A. Supply and installation of the indoor resilient multipurpose surfacing
B. Application of the game lines
C. References for the correct construction and preparation of concrete slabs to receive resilient flooring.

1.2 *SUBMITTALS*

A. Product Data:
   1. Manufacturer's promotional brochures, specifications and installation instructions
B. Manufacturer Certifications:
   1. Provide certification that accurately identifies the Original Equipment Manufacturer (OEM) of flooring furnished for this project including manufacturer's name, address and factory location.
   2. Suppliers of private label flooring for this project must identify themselves as such and fully disclose the OEM information listed above.
   3. All "manufacturer" requirements in these specifications must be complied with by the OEM, including warranties, certifications, qualifications, product data, test results, environmental requirements, performance data, etc.
C. Samples:
   1. Submit for selection and approval three (3) sets of the indoor resilient multipurpose surfacing, manufacturer's brochures, samples or sample boards of all of the available colors, textures and styles.
   2. Submit color samples of all the available game line paint colors for selection and approval.
D. Closeout Submittals:
   1. Submit three (3) copies of the indoor resilient multipurpose surfacing and manufacturer's maintenance instructions.
   2. Submit three (3) copies of the material and installation warranties as specified.

1.3 *QUALITY ASSURANCE*

A. Qualifications:
   1. The indoor resilient multipurpose surfacing shall have been actively marketed for a minimum of ten (10) years.
   2. The indoor resilient multipurpose surfacing shall be manufactured in an ISO 9001 certified plant.
   3. The indoor resilient multipurpose surfacing shall be manufactured in an ISO 14001 certified plant.
   4. The indoor resilient multipurpose surfacing supplier shall be an established firm, experienced in the field, and competent in the techniques required by the manufacturer.
   5. The installer of the indoor resilient multipurpose surfacing shall have a minimum of five (5) years of experience in the field installing indoor resilient multipurpose surfacing and have worked on at least five (5) projects of similar size, type and complexity.

B. Certifications:
   1. Installer to submit the indoor resilient athletic surfacing manufacturer's or distributor's certification attesting that they are an approved installer of the indoor resilient multipurpose surfacing.
   2. The ind**o**or resilient multipurpose surfacing manufacturer to submit official ISO 9001 certification for the facility in which the indoor resilient multipurpose surfacing is manufactured.

C. Testing:
   Tests shall be relative for multi-purpose use with certificates from independent testing resources to be made available upon request. Test results shall be performed according to ASTM standard testing procedures including ASTM F2772 "Standard Specification for Athletic Performance Properties of Indoor Sports Floor Systems".

1.4 *DELIVERY, STORAGE AND HANDLING*

A. Delivery:
   Material shall not be delivered until all related work is in place and finished and/or proper storage facilities and conditions can be provided and guaranteed stable according to FieldTurf USA, Inc. recommendations.

B. Storage:
   1. Store the material in a secure, clean and dry location.
   2. Maintain temperature between 55° and 85° Fahrenheit.
   3. Store the indoor resilient athletic surfacing rolls in an upright position on a smooth flat surface immediately upon delivery to jobsite.
   4. Rolls shipped in rigid protective cardboard containers can be laid horizontally prior to unpacking and installation.

1.5 *PROJECT/SITE CONDITIONS*

A. It is the responsibility of the general contractor/construction manager to maintain project/site conditions acceptable for the installation of the indoor resilient multipurpose flooring.

B. The area in which the indoor resilient multipurpose surfacing will be installed shall be dry and weather tight. Permanent heat, light and ventilation shall be installed and operable.

C. All other trades shall have completed their work prior to the installation of the resilient athletic flooring. The general contractor or construction manager shall maintain a secure and clean working environment before, during and after the installation.

D. Maintain a stable room temperature of at least 65°F for a minimum of one (1) week prior to, during and thereafter installation.

E. An effective low-permeance vapor barrier is placed directly beneath the concrete subfloor. For "on" or "below grade" installations, it is recommended to provide a permanent vapor barrier resistant to long term hydrostatic pressure/moisture exposure. Protrusions should be sealed to prevent moisture migration into the slab. Moisture should not be allowed to enter the slab after the completed construction.

F. Concrete subfloor surface pH level within the 7 to 11 range dependent upon installation type.

G. Concrete subfloor should be no greater than 1/8" within a 10 ft diameter. This tolerance can be measured in accordance with ASTM E1155. A specified (F_F) of 50 and an (F_L) of 30 should reach this degree of floor flatness and floor level. There is no numerical correlation between F numbers and the deviation from the straight

edge. However, the above specified numbers should achieve a flat floor with minimal deviation in the slab. Reference ACI 117 and ACI 302.1R. The general contractor should provide a certificate of compliance with the above recommendations.

H. Concrete subfloor must be clean and free of all foreign materials or objects including, but not limited to, curing compounds and sealers.

I. Fill cracks, grooves, voids, depressions, and other minor imperfections. Follow the manufacturer's directions. Moveable joints must be treated utilizing specific transitioning joint devices depending upon the architect's recommendations. Follow current ASTM F710 guidelines for the preparation of concrete slabs to receive resilient flooring.

J. Refer to ACI 302.2R "Guidelines for Concrete Slabs that Receive Moisture-Sensitive Flooring Materials" for concrete design and construction.

K. Concrete slab shall be fortified with continual steel reinforcement. Fiber reinforcement alone shall not be considered adequate fortification.

1.6 *WARRANTY*

A. Special Limited Warranty:
   1. Manufacturer's standard form in which manufacturer agrees to repair or replace sports flooring including labor that fails within specified warranty period.

B. Material warranty must be direct from the product manufacturer.
   1. Material warranties must come from original manufacturer or division thereof. Private label warranties from distributors or brokers are not valid. Supply original point of manufacturing upon request.

C. Failures include, but are not limited to, the following:
   1. Material manufacturing defects.
   2. Surface wear and deterioration to the point of wear-through of wear layer per ASTM F410/ASTM F1303.
   3. Failure due to substrate moisture exposure exceeding 98 percent relative humidity when tested according to ASTM F2170.

D. Warranty Period:
   1. <u>For material defects and surface wear-through:</u> **25** years from date of substantial completion.
   2. <u>For moisture vapor tolerance:</u> **25** years from date of substantial completion.

E. Installer's Limited Warranty:
   1. Installer's standard form in which installer agrees to repair or replace sports flooring that fails due to poor workmanship or faulty installation within the specified warranty period.
   2. Warranty Period: 2 years from date of substantial completion.

1.7 *ADDITIONAL MATERIALS*

A. Furnish to the owner additional materials containing a total of at least 1% of each different color or design of the indoor resilient athletic surfacing used on the project.

1.8 *LEED™ CERTIFICATION*

A. The indoor resilient athletic surfacing should be able to help this facility to achieve points towards *LEED™ certification.* Flooring system must be certified by FloorScore.
B. LEED categories positively affected by the indoor resilient athletic surfacing:

LEED™ V4 Credit		Contribution
Materials & Resources: Building Product Disclosure & Optimization (BPDO)		
MRc3: Sourcing of Raw Materials	Options 1 & 2	2 Points
MRc4: Material Ingredients	Option 1	1 Point
MRc5: Construction and Demolition Management	Reclamation and Recycling	ReStart® Program
Indoor Environmental Quality		
EQc2: Low-Emitting Materials	TVOC: 0.5 mg/m3 or less	FloorScore®

PART 2 - PRODUCTS

2.1 *MANUFACTURERS*

A. The basis of the design for the indoor resilient multipurpose surfacing is Omnisports Speed as manufactured by Tarkett.
B. All other installation accessories and related components must be either made or approved by the indoor resilient athletic surfacing manufacturer.
C. Other products may be approved as equal if deemed qualified and submitted in accordance with the General Conditions.
D. Test reports confirming compliance from an independent sports laboratory must be provided along with samples, technical data, installation, maintenance, and warranty prior to acceptance as an alternative product.

2.2 *MATERIALS*

A. Omnisports Speed - Prefabricated sport surface (0.14”) with wood flooring design, single surface embossing and Extreme Three (3) Layers technology (X3LT) as supplied by Tarkett.
   1. Embossing of wood design and solid colors must be the same; varying embossing or surface textures will not be allowed.
   2. Printing of wood design shall closely resemble standard wood strip flooring in size, color, board length, and grain appearance.
   3. Surface embossing combined with TopClean XP must offer proper balance of surface friction per the ASTM F2772.
   4. Surface embossing combined with TopClean XP must provide resistance to stains and scratches. Surface profile must not incorporate linear embossing.
   5. The wood design shall be protected by a clear layer of pure PVC (Polyvinyl Chloride) and TopClean XP, a factory-applied UV cured urethane treatment.
   6. Extreme Three (3) Layers technology (X3LT) includes Omnisports XCS cushion, glass veil and calendared sheet must offer improved shock absorbing comfort while providing better indentation recovery

7. The XCS cushion force reduction layer shall be high-density closed cell PVC foam with honeycomb embossing, and is applied in one continuous manufacturing process.
8. Laminated or adhered foam layers will not be allowed.
9. Field constructed products will not be accepted.

B. Physical properties of the indoor resilient athletic surfacing shall conform to the following minimums:

Width	—	6’ 6” (2 m)
Length	—	75.5’ (23m) approx.
Wear Layer	—	2 mm
Total Thickness	—	3.5 mm
Wear Layer	Type 1– Grade 1	ASTM F1303/F410
Vertical Deformation	PASSED	ASTM F2772
Rolling Load	PASSED	0.30 (EN 1569 {11/1999})
Surface Finish Effect	PASSED	ASTM F2772 (80 – 110)
Chemical Resistance	Excellent	ASTM F925
Impact Resistance	PASSED	EN 1517
Abrasion Resistance	PASSED	0.10 (EN ISO 5470-1 {06/1999})
Static Load Limit	PASSED	ASTM F970- Load 175 Lbs
Sound Insulation	Excellent	+/= 19 dB (ISO 717/2)
In-Room Sound Insulation	Excellent	62dB (NF S31-074)
Ball Rebound	PASSED	ASTM F2772 > 90%
Force Reduction	PASSED	ASTM F2772 Class 1
Fire Rating	PASSED	ASTM E648 Class 1
Microbial Assays Test	No Growth	G21 ASTM - Backing
Phthalate-free technology	—	YES
REACH Compliant	—	YES
Heavy Metals	—	NO
ISO 9001	—	YES
ISO 14001	—	YES

1. Color: As available from the indoor resilient athletic surfacing manufacturer’s standard range.
2. Hardwood Design Series: High definition printing for a realistic wood surface appearance as available from the indoor resilient athletic surfacing manufacturer’s standard range.
3. Texture: Texture to remain consistent between solid colors and wood design when blending colors.

C. Welding Rod: As supplied by the indoor resilient athletic surfacing manufacturer or supplier.
   1. Color to blend with the indoor resilient athletic surfacing color or design.
   2. All seams shall be welded to create a monolithic and impermeable surface.

D. Adhesive: As approved by the indoor resilient athletic surfacing manufacturer.

E. Game Line Paint and Primer: As approved by the indoor resilient athletic surfacing manufacturer.

PART 3 - EXECUTION

3.1 *EXAMINATION*

A. It is the responsibility of the general contractor/construction manager to ensure that project/site conditions are acceptable for the installation of the indoor resilient athletic flooring.
B. Verify that the area in which the indoor resilient athletic surfacing will be installed is dry and weather tight. Verify that permanent heat, light and ventilation are installed and operable.
C. Verify that all other work that could cause damage, dirt and dust or interrupt the normal pace of the indoor resilient athletic flooring installation is completed or suspended.
D. Verify that there is a stable room temperature of at least 65◦F.
E. Verify that there are no foreign materials or objects on the subfloor and that the subfloor is clean and ready for installation.
F. *Direct Full Spread Adhering to Concrete Subfloor HS Sports Spray : moisture content less than 90% RH when tested per ASTM F2170.*
G. Follow Fieldturf USA, Inc. installation recommendations.
H. Do not average the results of the tests. Report all field test results in writing to the General Contractor, Architect, and End User prior to installation.
I. Verify that the concrete subfloor surface pH level is within the 7 - 11 range.
J. Document the results confirming the slab is within manufacturer's tolerances for slab deviation.

3.2 *PREPARATION OF SURFACES*

A. Sand the entire surface of the concrete slab.
B. Sweep the concrete slab so as to remove all dirt and dust. If a sweeping compound is to be used it must be a sweeping compound that does not contain oil or other items that may inhibit the adhesive bond.
C. Slab must be dust free. In the event that dust impairs adhesive bond, priming the slab prior to application of adhesive may be necessary. Follow installation guidelines.
D. Follow OSHA guidelines.

3.3 *INSTALLATION*

A. The installation area shall be closed to all traffic and activity for a period to be set by the indoor resilient athletic surfacing installer. The indoor resilient athletic surfacing installation shall not begin until the installer is familiar with the existing conditions.
B. All necessary precautions should be taken to minimize noise, smell, dust, the use of hazardous materials and any other items that may inconvenience others.
C. Install the indoor resilient athletic surfacing in strict accordance with the indoor resilient athletic surfacing manufacturer's written instructions.
D. Install the indoor resilient athletic surfacing minimizing cross seams. Provide a seam diagram during the submittal process for approval prior to installation. Vinyl Sheet Flooring Seams: Comply with ASTM F 1516. Rout joints and heat weld to permanently and seamlessly fuse sections together.
E. Paint game lines using approved game line paint primer and game line paint in strict accordance with the game line paint manufacturer's instructions.
F. Install appropriate threshold plates or transition strips where necessary.

3.5 *CLEANING*

A. Remove all unused materials, tools, and equipment and dispose of any debris properly. Clean the indoor resilient athletic surfacing in accordance with the manufacturer's instructions.

3.6 *PROTECTION*

A. If required, protect the indoor resilient athletic surfacing from damage using coverings approved by the manufacturer until acceptance of work by the customer or their authorized representative.

3.7 *RELATED STANDARDS AND GUIDELINES*

A. ASTM F2170 "Standard Test Method for Determining Relative Humidity In Concrete Floor Slabs Using In-Situ Probes"
B. ASTM F710 "Standard Practice for Preparing Concrete Floors to Receive Resilient Flooring"
C. ACI 302.2R-06 "Guideline for Concrete Slabs that Receive Moisture-Sensitive Flooring Materials"
D. ASTM F2772-11 "Standard Specification for Athletic Performance Properties of Indoor Sports Floor Systems"

END OF SECTION

SECTION 09 65 66
ARCHITECTURAL SPECIFICATIONS FOR INDOOR RESILIENT ATHLETIC SURFACING

PART 1 – GENERAL

1.1 *SECTION INCLUDES*

A. Supply and installation of the indoor resilient multipurpose surfacing
B. Application of the game lines
C. References for the correct construction and preparation of concrete slabs to receive resilient flooring.

1.2 *SUBMITTALS*

A. Product Data:
   1. Manufacturer's promotional brochures, specifications and installation instructions
B. Manufacturer Certifications:
   1. Provide certification that accurately identifies the Original Equipment Manufacturer (OEM) of flooring furnished for this project including manufacturer's name, address and factory location.
   2. Suppliers of private label flooring for this project must identify themselves as such and fully disclose the OEM information listed above.
   3. All "manufacturer" requirements in these specifications must be complied with by the OEM, including warranties, certifications, qualifications, product data, test results, environmental requirements, performance data, etc.
C. Samples:
   1. Submit for selection and approval three (3) sets of the indoor resilient multipurpose surfacing, manufacturer's brochures, samples or sample boards of all of the available colors, textures and styles.
   2. Submit color samples of all the available game line paint colors for selection and approval.
D. Closeout Submittals:
   1. Submit three (3) copies of the indoor resilient multipurpose surfacing and manufacturer's maintenance instructions.
   2. Submit three (3) copies of the material and installation warranties as specified.

1.3 *QUALITY ASSURANCE*

A. Qualifications:
   1. The indoor resilient multipurpose surfacing shall have been actively marketed for a minimum of ten (10) years in the country.
   2. The indoor resilient multipurpose surfacing shall be manufactured in an ISO 9001 certified plant.
   3. The indoor resilient multipurpose surfacing shall be manufactured in an ISO 14001 certified plant.
   4. The indoor resilient multipurpose surfacing supplier shall be an established firm, experienced in the field, and competent in the techniques required by the manufacturer.
   5. The installer of the indoor resilient multipurpose surfacing shall have a minimum of five (5) years of experience in the field installing indoor resilient multipurpose surfacing and have worked on at least five (5) projects of similar size, type and complexity.

B. Certifications:
   1. Installer to submit the indoor resilient athletic surfacing manufacturer's or distributor's certification attesting that they are an approved installer of the indoor resilient multipurpose surfacing.
   2. The ind**o**or resilient multipurpose surfacing manufacturer to submit official ISO 9001 certification for the facility in which the indoor resilient multipurpose surfacing is manufactured.

C. Testing:
   Tests shall be relative for multi-purpose use with certificates from independent testing resources to be made available upon request. Test results shall be performed according to ASTM standard testing procedures including ASTM F2772 "Standard Specification for Athletic Performance Properties of Indoor Sports Floor Systems".

1.4 *DELIVERY, STORAGE AND HANDLING*

A. Delivery:
   Material shall not be delivered until all related work is in place and finished and/or proper storage facilities and conditions can be provided and guaranteed stable according to FieldTurf USA, Inc. recommendations.

B. Storage:
   1. Store the material in a secure, clean and dry location.
   2. Maintain temperature between 55° and 85° Fahrenheit.
   3. Store the indoor resilient athletic surfacing rolls in an upright position on a smooth flat surface immediately upon delivery to jobsite.
   4. Rolls shipped in rigid protective cardboard containers can be laid horizontally prior to unpacking and installation.

1.5 *PROJECT/SITE CONDITIONS*

A. It is the responsibility of the general contractor/construction manager to maintain project/site conditions acceptable for the installation of the indoor resilient multipurpose flooring.

B. The area in which the indoor resilient multipurpose surfacing will be installed shall be dry and weather tight. Permanent heat, light and ventilation shall be installed and operable.

C. All other trades shall have completed their work prior to the installation of the resilient athletic flooring. The general contractor or construction manager shall maintain a secure and clean working environment before, during and after the installation.

D. Maintain a stable room temperature of at least 65°F for a minimum of one (1) week prior to, during and thereafter installation.

E. An effective low-permeance vapor barrier is placed directly beneath the concrete subfloor. For "on" or "below grade" installations, it is recommended to provide a permanent vapor barrier resistant to long term hydrostatic pressure/moisture exposure. Protrusions should be sealed to prevent moisture migration into the slab. Moisture should not be allowed to enter the slab after the completed construction.

F. Concrete subfloor surface pH level within the 7 to 11 range dependent upon installation type.

G. Concrete subfloor should be no greater than 1/8" within a 10 ft diameter. This tolerance can be measured in accordance with ASTM E1155. A specified (F_F) of 50 and an (F_L) of 30 should reach this degree of floor flatness and floor level. There is no numerical correlation between F numbers and the deviation from the straight

edge. However, the above specified numbers should achieve a flat floor with minimal deviation in the slab. Reference ACI 117 and ACI 302.1R. The general contractor should provide a certificate of compliance with the above recommendations.

H. Concrete subfloor must be clean and free of all foreign materials or objects including, but not limited to, curing compounds and sealers.

I. Fill cracks, grooves, voids, depressions, and other minor imperfections. Follow the manufacturer's directions. Moveable joints must be treated utilizing specific transitioning joint devices depending upon the architect's recommendations. Follow current ASTM F710 guidelines for the preparation of concrete slabs to receive resilient flooring.

J. Refer to ACI 302.2R "Guidelines for Concrete Slabs that Receive Moisture-Sensitive Flooring Materials" for concrete design and construction.

K. Concrete slab shall be fortified with continual steel reinforcement. Fiber reinforcement alone shall not be considered adequate fortification.

1.6 *WARRANTY*

A. Special Limited Warranty:
   1. Manufacturer's standard form in which manufacturer agrees to repair or replace sports flooring including labor that fails within specified warranty period.

B. Material warranty must be direct from the product manufacturer.
   1. Material warranties must come from original manufacturer or division thereof. Private label warranties from distributors or brokers are not valid. Supply original point of manufacturing upon request.

C. Failures include, but are not limited to, the following:
   1. Material manufacturing defects.
   2. Surface wear and deterioration to the point of wear-through of wear layer per ASTM F410/ASTM F1303.
   3. Failure due to substrate moisture exposure exceeding 98 percent relative humidity when tested according to ASTM F2170.

D. Warranty Period:
   1. For material defects and surface wear-through: **25** years from date of substantial completion.
   2. For moisture vapor tolerance: **25** years from date of substantial completion.

E. Installer's Limited Warranty:
   1. Installer's standard form in which installer agrees to repair or replace sports flooring that fails due to poor workmanship or faulty installation within the specified warranty period.
   2. Warranty Period: 2 years from date of substantial completion.

1.7 *ADDITIONAL MATERIALS*

A. Furnish to the owner additional materials containing a total of at least 1% of each different color or design of the indoor resilient athletic surfacing used on the project.

1.8 *LEED™ CERTIFICATION*

A. The indoor resilient athletic surfacing should be able to help this facility to achieve points towards *LEED™ certification.* Flooring system must be certified by FloorScore.
B. LEED categories positively affected by the indoor resilient athletic surfacing:

LEED™ V4 Credit		Contribution
Materials & Resources: Building Product Disclosure & Optimization (BPDO)		
MRc3: Sourcing of Raw Materials	Options 1 & 2	2 Points
MRc4: Material Ingredients	Option 1	1 Point
MRc5: Construction and Demolition Management	Reclamation and Recycling	ReStart® Program
Indoor Environmental Quality		
EQc2: Low-Emitting Materials	TVOC: 0.5 mg/m3 or less	FloorScore®

PART 2 - PRODUCTS

2.1 *MANUFACTURERS*

A. The basis of the design for the indoor resilient multipurpose surfacing is Omnisports Speed as manufactured by Tarkett.
B. All other installation accessories and related components must be either made or approved by the indoor resilient athletic surfacing manufacturer.
C. Other products may be approved as equal if deemed qualified and submitted in accordance with the General Conditions.
D. Test reports confirming compliance from an independent sports laboratory must be provided along with samples, technical data, installation, maintenance, and warranty prior to acceptance as an alternative product.

2.2 *MATERIALS*

A. Omnisports Speed - Prefabricated sport surface (0.14”) with wood flooring design, single surface embossing and Extreme Three (3) Layers technology (X3LT) as supplied by Tarkett.
   1. Embossing of wood design and solid colors must be the same; varying embossing or surface textures will not be allowed.
   2. Printing of wood design shall closely resemble standard wood strip flooring in size, color, board length, and grain appearance.
   3. Surface embossing combined with TopClean XP must offer proper balance of surface friction per the ASTM F2772.
   4. Surface embossing combined with TopClean XP must provide resistance to stains and scratches. Surface profile must not incorporate linear embossing.
   5. The wood design shall be protected by a clear layer of pure PVC (Polyvinyl Chloride) and TopClean XP, a factory-applied UV cured urethane treatment.
   6. Extreme Three (3) Layers technology (X3LT) includes Omnisports XCS cushion, glass veil and calendared sheet must offer improved shock absorbing comfort while providing better indentation recovery

7. The XCS cushion force reduction layer shall be high-density closed cell PVC foam with honeycomb embossing, and is applied in one continuous manufacturing process.
8. Laminated or adhered foam layers will not be allowed.
9. Field constructed products will not be accepted.

B. Physical properties of the indoor resilient athletic surfacing shall conform to the following minimums:

Width	—	6’ 6” (2 m)
Length	—	75.5’ (23m) approx.
Wear Layer	—	2 mm
Total Thickness	—	3.5 mm
Wear Layer	Type 1– Grade 1	ASTM F1303/F410
Vertical Deformation	PASSED	ASTM F2772
Rolling Load	PASSED	0.30 (EN 1569 {11/1999})
Surface Finish Effect	PASSED	ASTM F2772 (80 – 110)
Chemical Resistance	Excellent	ASTM F925
Impact Resistance	PASSED	EN 1517
Abrasion Resistance	PASSED	0.10 (EN ISO 5470-1 {06/1999})
Static Load Limit	PASSED	ASTM F970- Load 175 Lbs
Sound Insulation	Excellent	+/= 19 dB (ISO 717/2)
In-Room Sound Insulation	Excellent	62dB (NF S31-074)
Ball Rebound	PASSED	ASTM F2772 > 90%
Force Reduction	PASSED	ASTM F2772 Class 1
Fire Rating	PASSED	ASTM E648 Class 1
Microbial Assays Test	No Growth	G21 ASTM - Backing
Phthalate-free technology	—	YES
REACH Compliant	—	YES
Heavy Metals	—	NO
ISO 9001	—	YES
ISO 14001	—	YES

1. Color: As available from the indoor resilient athletic surfacing manufacturer’s standard range.
2. Hardwood Design Series: High definition printing for a realistic wood surface appearance as available from the indoor resilient athletic surfacing manufacturer’s standard range.
3. Texture: Texture to remain consistent between solid colors and wood design when blending colors.

C. Welding Rod: As supplied by the indoor resilient athletic surfacing manufacturer or supplier.
   1. Color to blend with the indoor resilient athletic surfacing color or design.
   2. All seams shall be welded to create a monolithic and impermeable surface.

D. Adhesive: As approved by the indoor resilient athletic surfacing manufacturer.

E. Game Line Paint and Primer: As approved by the indoor resilient athletic surfacing manufacturer.

PART 3 - EXECUTION

3.1 *EXAMINATION*

A. It is the responsibility of the general contractor/construction manager to ensure that project/site conditions are acceptable for the installation of the indoor resilient athletic flooring.
B. Verify that the area in which the indoor resilient athletic surfacing will be installed is dry and weather tight. Verify that permanent heat, light and ventilation are installed and operable.
C. Verify that all other work that could cause damage, dirt and dust or interrupt the normal pace of the indoor resilient athletic flooring installation is completed or suspended.
D. Verify that there is a stable room temperature of at least 65◦F.
E. Verify that there are no foreign materials or objects on the subfloor and that the subfloor is clean and ready for installation.
F. *Direct Full Spread Adhering to Concrete Subfloor Multi-Poxy : moisture content less than 98% RH when tested per ASTM F2170.*
G. Follow Fieldturf USA, Inc. installation recommendations.
H. Do not average the results of the tests. Report all field test results in writing to the General Contractor, Architect, and End User prior to installation.
I. Verify that the concrete subfloor surface pH level is within the 7 - 11 range.
J. Document the results confirming the slab is within manufacturer's tolerances for slab deviation.

3.2 *PREPARATION OF SURFACES*

A. Sand the entire surface of the concrete slab.
B. Sweep the concrete slab so as to remove all dirt and dust. If a sweeping compound is to be used it must be a sweeping compound that does not contain oil or other items that may inhibit the adhesive bond.
C. Slab must be dust free. In the event that dust impairs adhesive bond, priming the slab prior to application of adhesive may be necessary. Follow installation guidelines.
D. Follow OSHA guidelines.

3.3 *INSTALLATION*

A. The installation area shall be closed to all traffic and activity for a period to be set by the indoor resilient athletic surfacing installer. The indoor resilient athletic surfacing installation shall not begin until the installer is familiar with the existing conditions.
B. All necessary precautions should be taken to minimize noise, smell, dust, the use of hazardous materials and any other items that may inconvenience others.
C. Install the indoor resilient athletic surfacing in strict accordance with the indoor resilient athletic surfacing manufacturer's written instructions.
D. Install the indoor resilient athletic surfacing minimizing cross seams. Provide a seam diagram during the submittal process for approval prior to installation. Vinyl Sheet Flooring Seams: Comply with ASTM F 1516. Rout joints and heat weld to permanently and seamlessly fuse sections together.
E. Paint game lines using approved game line paint primer and game line paint in strict accordance with the game line paint manufacturer's instructions.
F. Install appropriate threshold plates or transition strips where necessary.

3.5 *CLEANING*

A. Remove all unused materials, tools, and equipment and dispose of any debris properly. Clean the indoor resilient athletic surfacing in accordance with the manufacturer's instructions.

3.6 *PROTECTION*

A. If required, protect the indoor resilient athletic surfacing from damage using coverings approved by the manufacturer until acceptance of work by the customer or their authorized representative.

3.7 *RELATED STANDARDS AND GUIDELINES*

A. ASTM F2170 "Standard Test Method for Determining Relative Humidity In Concrete Floor Slabs Using In-Situ Probes"
B. ASTM F710 "Standard Practice for Preparing Concrete Floors to Receive Resilient Flooring"
C. ACI 302.2R-06 "Guideline for Concrete Slabs that Receive Moisture-Sensitive Flooring Materials"
D. ASTM F2772-11 "Standard Specification for Athletic Performance Properties of Indoor Sports Floor Systems"

END OF SECTION

SECTION 09 65 66
ARCHITECTURAL SPECIFICATIONS FOR INDOOR RESILIENT ATHLETIC SURFACING

PART 1 – GENERAL

1.1 *SECTION INCLUDES*

A. Supply and installation of the indoor resilient multipurpose surfacing
B. Application of the game lines
C. References for the correct construction and preparation of concrete slabs to receive resilient flooring.

1.2 *SUBMITTALS*

A. Product Data:
   1. Manufacturer's promotional brochures, specifications and installation instructions
B. Manufacturer Certifications:
   1. Provide certification that accurately identifies the Original Equipment Manufacturer (OEM) of flooring furnished for this project including manufacturer's name, address and factory location.
   2. Suppliers of private label flooring for this project must identify themselves as such and fully disclose the OEM information listed above.
   3. All "manufacturer" requirements in these specifications must be complied with by the OEM, including warranties, certifications, qualifications, product data, test results, environmental requirements, performance data, etc.
C. Samples:
   1. Submit for selection and approval three (3) sets of the indoor resilient multipurpose surfacing, manufacturer's brochures, samples or sample boards of all of the available colors, textures and styles.
   2. Submit color samples of all the available game line paint colors for selection and approval.
D. Closeout Submittals:
   1. Submit three (3) copies of the indoor resilient multipurpose surfacing and manufacturer's maintenance instructions.
   2. Submit three (3) copies of the material and installation warranties as specified.

1.3 *QUALITY ASSURANCE*

A. Qualifications:
   1. The indoor resilient multipurpose surfacing shall have been actively marketed for a minimum of ten (10) years.
   2. The indoor resilient multipurpose surfacing shall be manufactured in an ISO 9001 certified plant.
   3. The indoor resilient multipurpose surfacing shall be manufactured in an ISO 14001 certified plant.
   4. The indoor resilient multipurpose surfacing supplier shall be an established firm, experienced in the field, and competent in the techniques required by the manufacturer.
   5. The installer of the indoor resilient multipurpose surfacing shall have a minimum of five (5) years of experience in the field installing indoor resilient multipurpose surfacing and have worked on at least five (5) projects of similar size, type and complexity.

B. Certifications:
   1. Installer to submit the indoor resilient athletic surfacing manufacturer's or distributor's certification attesting that they are an approved installer of the indoor resilient multipurpose surfacing.
   2. The ind**o**or resilient multipurpose surfacing manufacturer to submit official ISO 9001 certification for the facility in which the indoor resilient multipurpose surfacing is manufactured.

C. Testing:
   Tests shall be relative for multi-purpose use with certificates from independent testing resources to be made available upon request. Test results shall be performed according to ASTM standard testing procedures including ASTM F2772 "Standard Specification for Athletic Performance Properties of Indoor Sports Floor Systems".

1.4 *DELIVERY, STORAGE AND HANDLING*

A. Delivery:
   Material shall not be delivered until all related work is in place and finished and/or proper storage facilities and conditions can be provided and guaranteed stable according to FieldTurf USA, Inc. recommendations.

B. Storage:
   1. Store the material in a secure, clean and dry location.
   2. Maintain temperature between 55° and 85° Fahrenheit.
   3. Store the indoor resilient athletic surfacing rolls in an upright position on a smooth flat surface immediately upon delivery to jobsite.
   4. Rolls shipped in rigid protective cardboard containers can be laid horizontally prior to unpacking and installation.

1.5 *PROJECT/SITE CONDITIONS*

A. It is the responsibility of the general contractor/construction manager to maintain project/site conditions acceptable for the installation of the indoor resilient multipurpose flooring.

B. The area in which the indoor resilient multipurpose surfacing will be installed shall be dry and weather tight. Permanent heat, light and ventilation shall be installed and operable.

C. All other trades shall have completed their work prior to the installation of the resilient athletic flooring. The general contractor or construction manager shall maintain a secure and clean working environment before, during and after the installation.

D. Maintain a stable room temperature of at least 65°F for a minimum of one (1) week prior to, during and thereafter installation.

E. An effective low-permeance vapor barrier is placed directly beneath the concrete subfloor. For "on" or "below grade" installations, it is recommended to provide a permanent vapor barrier resistant to long term hydrostatic pressure/moisture exposure. Protrusions should be sealed to prevent moisture migration into the slab. Moisture should not be allowed to enter the slab after the completed construction.

F. Concrete subfloor surface pH level within the 7 to 11 range dependent upon installation type.

G. Concrete subfloor should be no greater than 1/8" within a 10 ft diameter. This tolerance can be measured in accordance with ASTM E1155. A specified (F_F) of 50 and an (F_L) of 30 should reach this degree of floor flatness and floor level. There is no numerical correlation between F numbers and the deviation from the straight

edge. However, the above specified numbers should achieve a flat floor with minimal deviation in the slab. Reference ACI 117 and ACI 302.1R. The general contractor should provide a certificate of compliance with the above recommendations.

H. Concrete subfloor must be clean and free of all foreign materials or objects including, but not limited to, curing compounds and sealers.

I. Fill cracks, grooves, voids, depressions, and other minor imperfections. Follow the manufacturer's directions. Moveable joints must be treated utilizing specific transitioning joint devices depending upon the architect's recommendations. Follow current ASTM F710 guidelines for the preparation of concrete slabs to receive resilient flooring.

J. Refer to ACI 302.2R "Guidelines for Concrete Slabs that Receive Moisture-Sensitive Flooring Materials" for concrete design and construction.

K. Concrete slab shall be fortified with continual steel reinforcement. Fiber reinforcement alone shall not be considered adequate fortification.

1.6 *WARRANTY*

A. Special Limited Warranty:
   1. Manufacturer's standard form in which manufacturer agrees to repair or replace sports flooring including labor that fails within specified warranty period.

B. Material warranty must be direct from the product manufacturer.
   1. Material warranties must come from original manufacturer or division thereof. Private label warranties from distributors or brokers are not valid. Supply original point of manufacturing upon request.

C. Failures include, but are not limited to, the following:
   1. Material manufacturing defects.
   2. Surface wear and deterioration to the point of wear-through of wear layer per ASTM F410/ASTM F1303.
   3. Failure due to substrate moisture exposure exceeding 98 percent relative humidity when tested according to ASTM F2170.

D. Warranty Period:
   1. <u>For material defects and surface wear-through:</u> **25** years from date of substantial completion.
   2. <u>For moisture vapor tolerance:</u> **25** years from date of substantial completion.

E. Installer's Limited Warranty:
   1. Installer's standard form in which installer agrees to repair or replace sports flooring that fails due to poor workmanship or faulty installation within the specified warranty period.
   2. Warranty Period: 2 years from date of substantial completion.

1.7 *ADDITIONAL MATERIALS*

A. Furnish to the owner additional materials containing a total of at least 1% of each different color or design of the indoor resilient athletic surfacing used on the project.

1.8 *LEED™ CERTIFICATION*

A. The indoor resilient athletic surfacing should be able to help this facility to achieve points towards *LEED™ certification.* Flooring system must be certified by FloorScore.
B. LEED categories positively affected by the indoor resilient athletic surfacing:

LEED™ V4 Credit		Contribution
Materials & Resources: Building Product Disclosure & Optimization (BPDO)		
MRc3: Sourcing of Raw Materials	Options 1 & 2	2 Points
MRc4: Material Ingredients	Option 1	1 Point
MRc5: Construction and Demolition Management	Reclamation and Recycling	ReStart® Program
Indoor Environmental Quality		
EQc2: Low-Emitting Materials	TVOC: 0.5 mg/m3 or less	FloorScore®

PART 2 - PRODUCTS

2.1 *MANUFACTURERS*

A. The basis of the design for the indoor resilient multipurpose surfacing is Omnisports Speed as manufactured by Tarkett.
B. All other installation accessories and related components must be either made or approved by the indoor resilient athletic surfacing manufacturer.
C. Other products may be approved as equal if deemed qualified and submitted in accordance with the General Conditions.
D. Test reports confirming compliance from an independent sports laboratory must be provided along with samples, technical data, installation, maintenance, and warranty prior to acceptance as an alternative product.

2.2 *MATERIALS*

A. Omnisports Speed - Prefabricated sport surface (0.14”) with wood flooring design, single surface embossing and Extreme Three (3) Layers technology (X3LT) as supplied by Tarkett.
   1. Embossing of wood design and solid colors must be the same; varying embossing or surface textures will not be allowed.
   2. Printing of wood design shall closely resemble standard wood strip flooring in size, color, board length, and grain appearance.
   3. Surface embossing combined with TopClean XP must offer proper balance of surface friction per the ASTM F2772.
   4. Surface embossing combined with TopClean XP must provide resistance to stains and scratches. Surface profile must not incorporate linear embossing.
   5. The wood design shall be protected by a clear layer of pure PVC (Polyvinyl Chloride) and TopClean XP, a factory-applied UV cured urethane treatment.
   6. Extreme Three (3) Layers technology (X3LT) includes Omnisports XCS cushion, glass veil and calendared sheet must offer improved shock absorbing comfort while providing better indentation recovery

7. The XCS cushion force reduction layer shall be high-density closed cell PVC foam with honeycomb embossing, and is applied in one continuous manufacturing process.
8. Laminated or adhered foam layers will not be allowed.
9. Field constructed products will not be accepted.

A. Physical properties of the indoor resilient athletic surfacing shall conform to the following minimums:

Width	—	6’ 6” (2 m)
Length	—	75.5’ (23m) approx.
Wear Layer	—	2 mm
Total Thickness	—	3.5 mm
Wear Layer	Type 1– Grade 1	ASTM F1303/F410
Vertical Deformation	PASSED	ASTM F2772
Rolling Load	PASSED	0.30 (EN 1569 {11/1999})
Surface Finish Effect	PASSED	ASTM F2772 (80 – 110)
Chemical Resistance	Excellent	ASTM F925
Impact Resistance	PASSED	EN 1517
Abrasion Resistance	PASSED	0.10 (EN ISO 5470-1 {06/1999})
Static Load Limit	PASSED	ASTM F970- Load 175 Lbs
Sound Insulation	Excellent	+/= 19 dB (ISO 717/2)
In-Room Sound Insulation	Excellent	62dB (NF S31-074)
Ball Rebound	PASSED	ASTM F2772 > 90%
Force Reduction	PASSED	ASTM F2772 Class 1
Fire Rating	PASSED	ASTM E648 Class 1
Microbial Assays Test	No Growth	G21 ASTM - Backing
Phthalate-free technology	—	YES
REACH Compliant	—	YES
Heavy Metals	—	NO
ISO 9001	—	YES
ISO 14001	—	YES

1. Color: As available from the indoor resilient athletic surfacing manufacturer’s standard range.
2. Hardwood Design Series: High definition printing for a realistic wood surface appearance as available from the indoor resilient athletic surfacing manufacturer’s standard range.
3. Texture: Texture to remain consistent between solid colors and wood design when blending colors.

C. Welding Rod: As supplied by the indoor resilient athletic surfacing manufacturer or supplier.
   1. Color to blend with the indoor resilient athletic surfacing color or design.
   2. All seams shall be welded to create a monolithic and impermeable surface.

D. Adhesive: As approved by the indoor resilient athletic surfacing manufacturer.

E. Game Line Paint and Primer: As approved by the indoor resilient athletic surfacing manufacturer.

PART 3 - EXECUTION

3.1 *EXAMINATION*

A. It is the responsibility of the general contractor/construction manager to ensure that project/site conditions are acceptable for the installation of the indoor resilient athletic flooring.
B. Verify that the area in which the indoor resilient athletic surfacing will be installed is dry and weather tight. Verify that permanent heat, light and ventilation are installed and operable.
C. Verify that all other work that could cause damage, dirt and dust or interrupt the normal pace of the indoor resilient athletic flooring installation is completed or suspended.
D. Verify that there is a stable room temperature of at least 65◦F.
E. Verify that there are no foreign materials or objects on the subfloor and that the subfloor is clean and ready for installation.
F. *Direct Full Spread Adhering to Concrete Subfloor Multi-Set : moisture content less than 83% RH when tested per ASTM F2170.*
G. Follow Fieldturf USA, Inc. installation recommendations.
H. Do not average the results of the tests. Report all field test results in writing to the General Contractor, Architect, and End User prior to installation.
I. Verify that the concrete subfloor surface pH level is within the 7 - 11 range.
J. Document the results confirming the slab is within manufacturer's tolerances for slab deviation.

3.2 *PREPARATION OF SURFACES*

A. Sand the entire surface of the concrete slab.
B. Sweep the concrete slab so as to remove all dirt and dust. If a sweeping compound is to be used it must be a sweeping compound that does not contain oil or other items that may inhibit the adhesive bond.
C. Slab must be dust free. In the event that dust impairs adhesive bond, priming the slab prior to application of adhesive may be necessary. Follow installation guidelines.
D. Follow OSHA guidelines.

3.3 *INSTALLATION*

A. The installation area shall be closed to all traffic and activity for a period to be set by the indoor resilient athletic surfacing installer. The indoor resilient athletic surfacing installation shall not begin until the installer is familiar with the existing conditions.
B. All necessary precautions should be taken to minimize noise, smell, dust, the use of hazardous materials and any other items that may inconvenience others.
C. Install the indoor resilient athletic surfacing in strict accordance with the indoor resilient athletic surfacing manufacturer's written instructions.
D. Install the indoor resilient athletic surfacing minimizing cross seams. Provide a seam diagram during the submittal process for approval prior to installation. Vinyl Sheet Flooring Seams: Comply with ASTM F 1516. Rout joints and heat weld to permanently and seamlessly fuse sections together.
E. Paint game lines using approved game line paint primer and game line paint in strict accordance with the game line paint manufacturer's instructions.
F. Install appropriate threshold plates or transition strips where necessary.

3.5 *CLEANING*

A. Remove all unused materials, tools, and equipment and dispose of any debris properly. Clean the indoor resilient athletic surfacing in accordance with the manufacturer's instructions.

3.6 *PROTECTION*

A. If required, protect the indoor resilient athletic surfacing from damage using coverings approved by the manufacturer until acceptance of work by the customer or their authorized representative.

3.7 *RELATED STANDARDS AND GUIDELINES*

A. ASTM F2170 "Standard Test Method for Determining Relative Humidity In Concrete Floor Slabs Using In-Situ Probes"
B. ASTM F710 "Standard Practice for Preparing Concrete Floors to Receive Resilient Flooring"
C. ACI 302.2R-06 "Guideline for Concrete Slabs that Receive Moisture-Sensitive Flooring Materials"
D. ASTM F2772-11 "Standard Specification for Athletic Performance Properties of Indoor Sports Floor Systems"

END OF SECTION

SECTION 09 65 66
ARCHITECTURAL SPECIFICATIONS FOR INDOOR RESILIENT ATHLETIC SURFACING

PART 1 – GENERAL

1.1 *SECTION INCLUDES*

A. Supply and installation of the indoor resilient multipurpose surfacing
B. Application of the game lines
C. References for the correct construction and preparation of concrete slabs to receive resilient flooring.

1.2 *SUBMITTALS*

A. Product Data:
   1. Manufacturer's promotional brochures, specifications and installation instructions
B. Manufacturer Certifications:
   1. Provide certification that accurately identifies the Original Equipment Manufacturer (OEM) of flooring furnished for this project including manufacturer's name, address and factory location.
   2. Suppliers of private label flooring for this project must identify themselves as such and fully disclose the OEM information listed above.
   3. All "manufacturer" requirements in these specifications must be complied with by the OEM, including warranties, certifications, qualifications, product data, test results, environmental requirements, performance data, etc.
C. Samples:
   1. Submit for selection and approval three (3) sets of the indoor resilient multipurpose surfacing, manufacturer's brochures, samples or sample boards of all of the available colors, textures and styles.
   2. Submit color samples of all the available game line paint colors for selection and approval.
D. Closeout Submittals:
   1. Submit three (3) copies of the indoor resilient multipurpose surfacing and manufacturer's maintenance instructions.
   2. Submit three (3) copies of the material and installation warranties as specified.

1.3 *QUALITY ASSURANCE*

A. Qualifications:
   1. The indoor resilient multipurpose surfacing shall have been actively marketed for a minimum of ten (10) years.
   2. The indoor resilient multipurpose surfacing shall be manufactured in an ISO 9001 certified plant.
   3. The indoor resilient multipurpose surfacing shall be manufactured in an ISO 14001 certified plant.
   4. The indoor resilient multipurpose surfacing supplier shall be an established firm, experienced in the field, and competent in the techniques required by the manufacturer.
   5. The installer of the indoor resilient multipurpose surfacing shall have a minimum of five (5) years of experience in the field installing indoor resilient multipurpose surfacing and have worked on at least five (5) projects of similar size, type and complexity.

B. Certifications:
   1. Installer to submit the indoor resilient athletic surfacing manufacturer's or distributor's certification attesting that they are an approved installer of the indoor resilient multipurpose surfacing.
   2. The ind**o**or resilient multipurpose surfacing manufacturer to submit official ISO 9001 certification for the facility in which the indoor resilient multipurpose surfacing is manufactured.

C. Testing:
   Tests shall be relative for multi-purpose use with certificates from independent testing resources to be made available upon request. Test results shall be performed according to ASTM standard testing procedures including ASTM F2772 "Standard Specification for Athletic Performance Properties of Indoor Sports Floor Systems".

1.4 *DELIVERY, STORAGE AND HANDLING*

A. Delivery:
   Material shall not be delivered until all related work is in place and finished and/or proper storage facilities and conditions can be provided and guaranteed stable according to FieldTurf USA, Inc. recommendations.

B. Storage:
   1. Store the material in a secure, clean and dry location.
   2. Maintain temperature between 55° and 85° Fahrenheit.
   3. Store the indoor resilient athletic surfacing rolls in an upright position on a smooth flat surface immediately upon delivery to jobsite.
   4. Rolls shipped in rigid protective cardboard containers can be laid horizontally prior to unpacking and installation.

1.5 *PROJECT/SITE CONDITIONS*

A. It is the responsibility of the general contractor/construction manager to maintain project/site conditions acceptable for the installation of the indoor resilient multipurpose flooring.

B. The area in which the indoor resilient multipurpose surfacing will be installed shall be dry and weather tight. Permanent heat, light and ventilation shall be installed and operable.

C. All other trades shall have completed their work prior to the installation of the resilient athletic flooring. The general contractor or construction manager shall maintain a secure and clean working environment before, during and after the installation.

D. Maintain a stable room temperature of at least 65°F for a minimum of one (1) week prior to, during and thereafter installation.

E. An effective low-permeance vapor barrier is placed directly beneath the concrete subfloor. For "on" or "below grade" installations, it is recommended to provide a permanent vapor barrier resistant to long term hydrostatic pressure/moisture exposure. Protrusions should be sealed to prevent moisture migration into the slab. Moisture should not be allowed to enter the slab after the completed construction.

F. Concrete subfloor surface pH level within the 7 to 11 range dependent upon installation type.

G. Concrete subfloor should be no greater than 1/8" within a 10 ft diameter. This tolerance can be measured in accordance with ASTM E1155. A specified (F_F) of 50 and an (F_L) of 30 should reach this degree of floor flatness and floor level. There is no numerical correlation between F numbers and the deviation from the straight

edge. However, the above specified numbers should achieve a flat floor with minimal deviation in the slab. Reference ACI 117 and ACI 302.1R. The general contractor should provide a certificate of compliance with the above recommendations.

H. Concrete subfloor must be clean and free of all foreign materials or objects including, but not limited to, curing compounds and sealers.

I. Fill cracks, grooves, voids, depressions, and other minor imperfections. Follow the manufacturer's directions. Moveable joints must be treated utilizing specific transitioning joint devices depending upon the architect's recommendations. Follow current ASTM F710 guidelines for the preparation of concrete slabs to receive resilient flooring.

J. Refer to ACI 302.2R "Guidelines for Concrete Slabs that Receive Moisture-Sensitive Flooring Materials" for concrete design and construction.

K. Concrete slab shall be fortified with continual steel reinforcement. Fiber reinforcement alone shall not be considered adequate fortification.

1.6 *WARRANTY*

A. Special Limited Warranty:
   1. Manufacturer's standard form in which manufacturer agrees to repair or replace sports flooring including labor that fails within specified warranty period.

B. Material warranty must be direct from the product manufacturer.
   1. Material warranties must come from original manufacturer or division thereof. Private label warranties from distributors or brokers are not valid. Supply original point of manufacturing upon request.

C. Failures include, but are not limited to, the following:
   1. Material manufacturing defects.
   2. Surface wear and deterioration to the point of wear-through of wear layer per ASTM F410/ASTM F1303.
   3. Failure due to substrate moisture exposure exceeding 98 percent relative humidity when tested according to ASTM F2170.

D. Warranty Period:
   1. <u>For material defects and surface wear-through:</u> **25** years from date of substantial completion.
   2. <u>For moisture vapor tolerance:</u> **25** years from date of substantial completion.

E. Installer's Limited Warranty:
   1. Installer's standard form in which installer agrees to repair or replace sports flooring that fails due to poor workmanship or faulty installation within the specified warranty period.
   2. Warranty Period: 2 years from date of substantial completion.

1.7 *ADDITIONAL MATERIALS*

A. Furnish to the owner additional materials containing a total of at least 1% of each different color or design of the indoor resilient athletic surfacing used on the project.

1.8 *LEED™ CERTIFICATION*

A. The indoor resilient athletic surfacing should be able to help this facility to achieve points towards *LEED™ certification.* Flooring system must be certified by FloorScore.
B. LEED categories positively affected by the indoor resilient athletic surfacing:

LEED™ V4 Credit		Contribution
Materials & Resources: Building Product Disclosure & Optimization (BPDO)		
MRc3: Sourcing of Raw Materials	Options 1 & 2	2 Points
MRc4: Material Ingredients	Option 1	1 Point
MRc5: Construction and Demolition Management	Reclamation and Recycling	ReStart® Program
Indoor Environmental Quality		
EQc2: Low-Emitting Materials	TVOC: 0.5 mg/m3 or less	FloorScore®

PART 2 - PRODUCTS

2.1 *MANUFACTURERS*

A. The basis of the design for the indoor resilient multipurpose surfacing is Omnisports Speed as manufactured by Tarkett.
B. All other installation accessories and related components must be either made or approved by the indoor resilient athletic surfacing manufacturer.
C. Other products may be approved as equal if deemed qualified and submitted in accordance with the General Conditions.
D. Test reports confirming compliance from an independent sports laboratory must be provided along with samples, technical data, installation, maintenance, and warranty prior to acceptance as an alternative product.

2.2 *MATERIALS*

A. Omnisports Speed - Prefabricated sport surface (0.14”) with wood flooring design, single surface embossing and Extreme Three (3) Layers technology (X3LT) as supplied by Tarkett.
   1. Embossing of wood design and solid colors must be the same; varying embossing or surface textures will not be allowed.
   2. Printing of wood design shall closely resemble standard wood strip flooring in size, color, board length, and grain appearance.
   3. Surface embossing combined with TopClean XP must offer proper balance of surface friction per the ASTM F2772.
   4. Surface embossing combined with TopClean XP must provide resistance to stains and scratches. Surface profile must not incorporate linear embossing.
   5. The wood design shall be protected by a clear layer of pure PVC (Polyvinyl Chloride) and TopClean XP, a factory-applied UV cured urethane treatment.
   6. Extreme Three (3) Layers technology (X3LT) includes Omnisports XCS cushion, glass veil and calendared sheet must offer improved shock absorbing comfort while providing better indentation recovery

7. The XCS cushion force reduction layer shall be high-density closed cell PVC foam with honeycomb embossing, and is applied in one continuous manufacturing process.
8. Laminated or adhered foam layers will not be allowed.
9. Field constructed products will not be accepted.

A. Physical properties of the indoor resilient athletic surfacing shall conform to the following minimums:

Width	—	6’ 6” (2 m)
Length	—	75.5’ (23m) approx.
Wear Layer	—	2 mm
Total Thickness	—	3.5 mm
Wear Layer	Type 1– Grade 1	ASTM F1303/F410
Vertical Deformation	PASSED	ASTM F2772
Rolling Load	PASSED	0.30 (EN 1569 {11/1999})
Surface Finish Effect	PASSED	ASTM F2772 (80 – 110)
Chemical Resistance	Excellent	ASTM F925
Impact Resistance	PASSED	EN 1517
Abrasion Resistance	PASSED	0.10 (EN ISO 5470-1 {06/1999})
Static Load Limit	PASSED	ASTM F970- Load 175 Lbs
Sound Insulation	Excellent	+/= 19 dB (ISO 717/2)
In-Room Sound Insulation	Excellent	61dB (NF S31-074)
Ball Rebound	PASSED	ASTM F2772 > 90%
Force Reduction	PASSED	ASTM F2772 Class 1
Fire Rating	PASSED	ASTM E648 Class 1
Microbial Assays Test	No Growth	G21 ASTM - Backing
Phthalate-free technology	—	YES
REACH Compliant	—	YES
Heavy Metals	—	NO
ISO 9001	—	YES
ISO 14001	—	YES

1. Color: As available from the indoor resilient athletic surfacing manufacturer’s standard range.
2. Hardwood Design Series: High definition printing for a realistic wood surface appearance as available from the indoor resilient athletic surfacing manufacturer’s standard range.
3. Texture: Texture to remain consistent between solid colors and wood design when blending colors.

C. Tarkolay – A high quality low permeance slip sheet vapor retarder designed to separate the installed system from the substrate below.
1. Tarkolay as manufactured by Tarkett can be used below, on, or above grade substrates that experience elevated moisture conditions.
2. Moisture tolerances shall have no limitation per ASTM F2170. Physical properties of the indoor resilient athletic surfacing shall conform to the following minimums:

Width	—	6’ 6” (2 m)
Length	—	147’7”’ (45 m) approx.
Total Thickness	—	1.3 mm
Dimensional Stability	PASSED	.01% (EN 1434)
Permeance	Excellent	<0.20 (ASTM E96

D. Welding Rod: As supplied by the indoor resilient athletic surfacing manufacturer or supplier.
   1. Color to blend with the indoor resilient athletic surfacing color or design.
   2. All seams shall be welded to create a monolithic and impermeable surface.
E. Adhesive: As approved by the indoor resilient athletic surfacing manufacturer.
F. Game Line Paint and Primer: As approved by the indoor resilient athletic surfacing manufacturer.

PART 3 - EXECUTION

3.1 *EXAMINATION*

A. It is the responsibility of the general contractor/construction manager to ensure that project/site conditions are acceptable for the installation of the indoor resilient athletic flooring.
B. Verify that the area in which the indoor resilient athletic surfacing will be installed is dry and weather tight. Verify that permanent heat, light and ventilation are installed and operable.
C. Verify that all other work that could cause damage, dirt and dust or interrupt the normal pace of the indoor resilient athletic flooring installation is completed or suspended.
D. Verify that there is a stable room temperature of at least 65°F.
E. Verify that there are no foreign materials or objects on the subfloor and that the subfloor is clean and ready for installation.
F. *Installation with Tarkolay to Concrete Subfloor : moisture content no limitation when tested per ASTM F2170.*
G. Follow Fieldturf USA, Inc. installation recommendations.
H. Do not average the results of the tests. Report all field test results in writing to the General Contractor, Architect, and End User prior to installation.
I. Verify that the concrete subfloor surface pH level is within the 7 - 11 range.
J. Document the results confirming the slab is within manufacturer's tolerances for slab deviation.

3.2 *PREPARATION OF SURFACES*

A. Sand the entire surface of the concrete slab.
B. Sweep the concrete slab so as to remove all dirt and dust. If a sweeping compound is to be used it must be a sweeping compound that does not contain oil or other items that may inhibit the adhesive bond.
C. Slab must be dust free. In the event that dust impairs adhesive bond, priming the slab prior to application of adhesive may be necessary. Follow installation guidelines.
D. Follow OSHA guidelines.

3.3 *INSTALLATION*

A. The installation area shall be closed to all traffic and activity for a period to be set by the indoor resilient athletic surfacing installer. The indoor resilient athletic surfacing installation shall not begin until the installer is familiar with the existing conditions.
B. All necessary precautions should be taken to minimize noise, smell, dust, the use of hazardous materials and any other items that may inconvenience others.
C. Install the indoor resilient athletic surfacing in strict accordance with the indoor resilient athletic surfacing manufacturer's written instructions.
D. Install the indoor resilient athletic surfacing minimizing cross seams. Provide a seam diagram during the submittal process for approval prior to installation. Vinyl Sheet Flooring Seams: Comply with ASTM F 1516. Rout joints and heat weld to permanently and seamlessly fuse sections together.
E. Paint game lines using approved game line paint primer and game line paint in strict accordance with the game line paint manufacturer's instructions.
F. Install appropriate threshold plates or transition strips where necessary.

3.5 *CLEANING*

A. Remove all unused materials, tools, and equipment and dispose of any debris properly. Clean the indoor resilient athletic surfacing in accordance with the manufacturer's instructions.

3.6 *PROTECTION*

A. If required, protect the indoor resilient athletic surfacing from damage using coverings approved by the manufacturer until acceptance of work by the customer or their authorized representative.

3.7 *RELATED STANDARDS AND GUIDELINES*

A. ASTM F2170 "Standard Test Method for Determining Relative Humidity In Concrete Floor Slabs Using In-Situ Probes"
B. ASTM F710 "Standard Practice for Preparing Concrete Floors to Receive Resilient Flooring"
C. ACI 302.2R-06 "Guideline for Concrete Slabs that Receive Moisture-Sensitive Flooring Materials"
D. ASTM F2772-11 "Standard Specification for Athletic Performance Properties of Indoor Sports Floor Systems"

END OF SECTION

SECTION 09 65 66
ARCHITECTURAL SPECIFICATIONS FOR INDOOR RESILIENT ATHLETIC SURFACING

PART 1 – GENERAL

1.1 *SECTION INCLUDES*

A. Supply and installation of the indoor resilient multipurpose surfacing
B. Application of the game lines
C. References for the correct construction and preparation of concrete slabs to receive resilient flooring.

1.2 *SUBMITTALS*

A. Product Data:
   1. Manufacturer's promotional brochures, specifications and installation instructions
B. Manufacturer Certifications:
   1. Provide certification that accurately identifies the Original Equipment Manufacturer (OEM) of flooring furnished for this project including manufacturer's name, address and factory location.
   2. Suppliers of private label flooring for this project must identify themselves as such and fully disclose the OEM information listed above.
   3. All "manufacturer" requirements in these specifications must be complied with by the OEM, including warranties, certifications, qualifications, product data, test results, environmental requirements, performance data, etc.
C. Samples:
   1. Submit for selection and approval three (3) sets of the indoor resilient multipurpose surfacing, manufacturer's brochures, samples or sample boards of all of the available colors, textures and styles.
   2. Submit color samples of all the available game line paint colors for selection and approval.
D. Closeout Submittals:
   1. Submit three (3) copies of the indoor resilient multipurpose surfacing and manufacturer's maintenance instructions.
   2. Submit three (3) copies of the material and installation warranties as specified.

1.3 *QUALITY ASSURANCE*

A. Qualifications:
   1. The indoor resilient multipurpose surfacing shall have been actively marketed for a minimum of ten (10) years.
   2. The indoor resilient multipurpose surfacing shall be manufactured in an ISO 9001 certified plant.
   3. The indoor resilient multipurpose surfacing shall be manufactured in an ISO 14001 certified plant.
   4. The indoor resilient multipurpose surfacing supplier shall be an established firm, experienced in the field, and competent in the techniques required by the manufacturer.
   5. The installer of the indoor resilient multipurpose surfacing shall have a minimum of five (5) years of experience in the field installing indoor resilient multipurpose surfacing and have worked on at least five (5) projects of similar size, type and complexity.

B. Certifications:
   1. Installer to submit the indoor resilient athletic surfacing manufacturer's certification attesting that they are a trained installer of the indoor resilient multipurpose surfacing.
   2. The indoor resilient multipurpose surfacing manufacturer to submit official ISO 9001 certification for the facility in which the indoor resilient multipurpose surfacing is manufactured.

C. Testing:
   1. Tests shall be relative for multi-purpose use with certificates from independent testing resources to be made available upon request.
   2. Test results shall be no more than 5 years old and performed according to ASTM standard testing procedures.

1.4 *DELIVERY, STORAGE AND HANDLING*

A. Delivery:
   Material shall not be delivered until all related work is in place and finished and/or proper storage facilities and conditions can be provided and guaranteed stable according to FieldTurf USA, Inc. recommendations.

B. Storage:
   1. Store the material in a secure, clean and dry location.
   2. Maintain temperature between 55° and 85° Fahrenheit.
   3. Store the indoor resilient athletic surfacing rolls in an upright position on a smooth flat surface immediately upon delivery to jobsite.
   4. Rolls shipped in rigid protective cardboard containers can be laid horizontally prior to unpacking and installation.

1.5 *PROJECT/SITE CONDITIONS*

A. It is the responsibility of the general contractor/construction manager to maintain project/site conditions acceptable for the installation of the indoor resilient multipurpose flooring.

B. The area in which the indoor resilient multipurpose surfacing will be installed shall be dry and weather tight. Permanent heat, light and ventilation shall be installed and operable.

C. All other trades shall have completed their work prior to the installation of the resilient athletic flooring. The general contractor or construction manager shall maintain a secure and clean working environment before, during and after the installation.

D. Maintain a stable room temperature of at least 65°F for a minimum of one (1) week prior to, during and thereafter installation.

E. An effective low-permeance vapor barrier is placed directly beneath the concrete subfloor. For "on" or "below grade" installations, it is recommended to provide a permanent vapor barrier resistant to long term hydrostatic pressure/moisture exposure. Protrusions should be sealed to prevent moisture migration into the slab. Moisture should not be allowed to enter the slab after the completed construction.

F. Concrete subfloor surface pH level within the 7 to 11 range dependent upon installation type.

G. Concrete subfloor should be no greater than 1/8" within a 10 ft diameter. This tolerance can be measured in accordance with ASTM E1155. A specified (F_F) of 50 and an (F_L) of 30 should reach this degree of floor flatness and floor level. There is no numerical correlation between F numbers and the deviation from the straight

edge. However, the above specified numbers should achieve a flat floor with minimal deviation in the slab. Reference ACI 117 and ACI 302.1R. The general contractor should provide a certificate of compliance with the above recommendations.

H. Concrete subfloor must be clean and free of all foreign materials or objects including, but not limited to, curing compounds and sealers.

I. Fill cracks, grooves, voids, depressions, and other minor imperfections. Follow the manufacturer's directions. Moveable joints must be treated utilizing specific transitioning joint devices depending upon the architect's recommendations. Follow current ASTM F710 guidelines for the preparation of concrete slabs to receive resilient flooring.

J. Refer to ACI 302.2R "Guidelines for Concrete Slabs that Receive Moisture-Sensitive Flooring Materials" for concrete design and construction.

K. Concrete slab shall be fortified with continual steel reinforcement. Fiber reinforcement alone shall not be considered adequate fortification.

1.6 *WARRANTY*

A. Materials:
The indoor resilient athletic surfacing shall be covered by the manufacturer against surfacing product defects for 30 years. The manufacturer of the indoor resilient multipurpose surfacing must provide this warranty upon request.

B. Installation:
The installation of the indoor resilient multipurpose surfacing shall be covered against poor workmanship and faulty installation by a two (2) year written, limited warranty provided by the contractor performing/overseeing the installation.

1.7 *ADDITIONAL MATERIALS*

A. Furnish to the owner additional materials containing a total of at least 1% of each different color or design of the indoor resilient athletic surfacing used on the project.

1.8 *LEED™ CERTIFICATION*

A. The indoor resilient athletic surfacing should be able to help this facility to achieve points towards *LEED™ certification.* Flooring system must be certified by FloorScore.

B. LEED categories positively affected by the indoor resilient athletic surfacing:

Product Type			PU with Recycled Base Layer
Building Reuse Maintain Interior Nonstructural Elements	**MR 1.2**	Renovation	1
Construction Waste Management	**MR 2**	Renovation	2
Recycled Content	**MR 4** **20% - 2 points**	New/Renovation	2
Regional Materials	**MR 5** **20% - 2 points**	New/Renovation	2
Materials and Resources Rapidly Renewable Materials	**MR 6**	New/Renovation	1
Indoor Environmental Air Quality Low VOC Adhesives/Sealants	**IEQ 4.1**	New/Renovation	1
Low-emitting Materials Paints and Coatings	**IEQ 4.2**	New/Renovation	1

PART 2 - PRODUCTS

2.1 *MANUFACTURERS*

A. The basis of the design for the indoor resilient multipurpose surfacing is Polyturf Plus Elite Pad and Pour 4+ 2 and Lumaflex system as manufactured by Tarkett.
B. All other installation accessories and related components must be either made or approved by the indoor resilient athletic surfacing manufacturer.
C. Other products may be approved as equal if deemed qualified and submitted in accordance with the General Conditions.
D. Test reports confirming compliance from an independent sports laboratory must be provided along with samples, technical data, installation, maintenance, and warranty prior to acceptance as an alternative product.

2.2 *MATERIALS*

Flooring System:
Polyturf Plus Elite 4+2 (6mm total thickness) consists of a recycled resilient sheet force reduction layer integrated with seamless, liquid applied, and self-leveling 2 mm polyurethane topcoat.

A durable protective color coat shall be applied to a thickness of approximately 7 mils. The finished product shall be a seamless surface heterogeneous resilient multipurpose synthetic flooring system. System shall comply with the following criteria. Colors to be selected from manufacturer's standard range.

The Lumaflex System shall incorporate Lumaflex double tongue and grooved multi-ply engineered panels, force reduction cushion, and appropriate vapor retarder.

A. Physical properties of the indoor resilient athletic surfacing shall conform to the following minimums:

Properties	Standards	PolyTurf Plus Pad & Pour Base Mat + Wear Coat +Top Coat		
Base Mat Properties				
Width		59″		
Length		82 lin. ft		
Weight		1.2 lb/sq ft		
Density	ASTM D297	.67 min (g/cm□)		
Tensile Strength	ASTM D412	88 psi (Die Cast C)		
Elongation	ASTM D412	48.5% (Die Cast C)		
Compression	ASTM F36	@50 psi	@100 psi	@200 psi
		87%	91%	91%
Tear Strength	ASTM D624	30 PPI Die C		
Flexibility	ASTM F147	0-1		
Compression Set B	ASTM D395	37% (25% deflection 158°F/22hrs)		
Compression Set B	ASTM D395	26% (50% deflection 158°F/22hrs)		
2mm Wear Coat Properties				
Shore Hardness	Shore A	80		
Tensile Strength	ASTM D412	1600psi		
Elongation	ASTM D412	150%		
Tear Strength	ASTM D624	122PLI		
Misc Techical				
Environmental Certification	GreenGuard	GreenGuard Plus Certified		
Sports Characteristics				
Overall Thickness			37 mm	
Shock Absorption	ASTM F2772		Class 5	
Ball Bounce	ASTM F2772	>90%		
Vertical Deformation	ASTM F2772	Passed		
Surface Finish Effect	ASTM F2772	Passed		

B. Adhesive: As approved by the indoor resilient athletic surfacing manufacturer.
C. Game Line Paint and Primer: As approved by the indoor resilient athletic surfacing manufacturer.
D. Colors selected from standard color range.

PART 3 - EXECUTION

3.1 *EXAMINATION*

A. It is the responsibility of the general contractor/construction manager to ensure that project/site conditions are acceptable for the installation of the indoor resilient athletic flooring.
B. Verify that the area in which the indoor resilient athletic surfacing will be installed is dry and weather tight. Verify that permanent heat, light and ventilation are installed and operable.
C. Verify that all other work that could cause damage, dirt and dust or interrupt the normal pace of the indoor resilient athletic flooring installation is completed or suspended.
D. Verify that there is a stable room temperature of at least 65°F.
E. Verify that there are no foreign materials or objects on the subfloor and that the subfloor is clean and ready for installation.
F. *Concrete Subfloor: moisture content less than 85% RH when tested per ASTM F2170.*
G. Follow Fieldturf USA, Inc. installation recommendations.
H. Do not average the results of the tests. Report all field test results in writing to the General Contractor, Architect, and End User prior to installation.
I. Verify that the concrete subfloor surface pH level is within the 7 - 11 range.
J. Document the results confirming the slab is within manufacturer's tolerances for slab deviation.

3.2 *PREPARATION OF SURFACES*

A. Sand the entire surface of the concrete slab.
B. Sweep the concrete slab so as to remove all dirt and dust. If a sweeping compound is to be used it must be a sweeping compound that does not contain oil or other items that may inhibit the adhesive bond.
C. Slab must be dust free. In the event that dust impairs adhesive bond, priming the slab prior to application of adhesive may be necessary. Follow installation guidelines.
D. Follow OSHA guidelines.

3.3 *INSTALLATION*

A. The installation area shall be closed to all traffic and activity for a period to be set by the indoor resilient athletic surfacing installer. The indoor resilient athletic surfacing installation shall not begin until the installer is familiar with the existing conditions.
B. All necessary precautions should be taken to minimize noise, smell, dust, the use of hazardous materials and any other items that may inconvenience others.
C. Install the indoor resilient athletic surfacing in strict accordance with the indoor resilient athletic surfacing manufacturer's written instructions.
D. Paint game lines using approved game line paint primer and game line paint in strict accordance with the game line paint manufacturer's instructions.
E. Install appropriate threshold plates or transition strips where necessary.

2.0 *CLEANING*

A. Remove all unused materials, tools, and equipment and dispose of any debris properly. Clean the indoor resilient athletic surfacing in accordance with the manufacturer's instructions.

3.6 *PROTECTION*

A. If required, protect the indoor resilient athletic surfacing from damage using coverings approved by the manufacturer until acceptance of work by the customer or their authorized representative.

3.7 *RELATED STANDARDS AND GUIDELINES*

A. ASTM F2170 "Standard Test Method for Determining Relative Humidity In Concrete Floor Slabs Using In-Situ Probes"
B. ASTM F710 "Standard Practice for Preparing Concrete Floors to Receive Resilient Flooring"
C. ACI 302.2R-06 "Guideline for Concrete Slabs that Receive Moisture-Sensitive Flooring Materials"
D. ASTM F2772-11 "Standard Specification for Athletic Performance Properties of Indoor Sports Floor Systems"

END OF SECTION

SECTION 09 65 66
ARCHITECTURAL SPECIFICATIONS FOR INDOOR RESILIENT ATHLETIC SURFACING

PART 1 – GENERAL

1.1 *SECTION INCLUDES*

A. Supply and installation of the indoor resilient multipurpose surfacing
B. Application of the game lines
C. References for the correct construction and preparation of concrete slabs to receive resilient flooring.

1.2 *SUBMITTALS*

A. Product Data:
   1. Manufacturer's promotional brochures, specifications and installation instructions
B. Manufacturer Certifications:
   1. Provide certification that accurately identifies the Original Equipment Manufacturer (OEM) of flooring furnished for this project including manufacturer's name, address and factory location.
   2. Suppliers of private label flooring for this project must identify themselves as such and fully disclose the OEM information listed above.
   3. All "manufacturer" requirements in these specifications must be complied with by the OEM, including warranties, certifications, qualifications, product data, test results, environmental requirements, performance data, etc.
C. Samples:
   1. Submit for selection and approval three (3) sets of the indoor resilient multipurpose surfacing, manufacturer's brochures, samples or sample boards of all of the available colors, textures and styles.
   2. Submit color samples of all the available game line paint colors for selection and approval.
D. Closeout Submittals:
   1. Submit three (3) copies of the indoor resilient multipurpose surfacing and manufacturer's maintenance instructions.
   2. Submit three (3) copies of the material and installation warranties as specified.

1.3 *QUALITY ASSURANCE*

A. Qualifications:
   1. The indoor resilient multipurpose surfacing shall have been actively marketed for a minimum of ten (10) years.
   2. The indoor resilient multipurpose surfacing shall be manufactured in an ISO 9001 certified plant.
   3. The indoor resilient multipurpose surfacing shall be manufactured in an ISO 14001 certified plant.
   4. The indoor resilient multipurpose surfacing supplier shall be an established firm, experienced in the field, and competent in the techniques required by the manufacturer.
   5. The installer of the indoor resilient multipurpose surfacing shall have a minimum of five (5) years of experience in the field installing indoor resilient multipurpose surfacing and have worked on at least five (5) projects of similar size, type and complexity.

B. Certifications:
   1. Installer to submit the indoor resilient athletic surfacing manufacturer's certification attesting that they are a trained installer of the indoor resilient multipurpose surfacing.
   2. The indoor resilient multipurpose surfacing manufacturer to submit official ISO 9001 certification for the facility in which the indoor resilient multipurpose surfacing is manufactured.

C. Testing:
   1. Tests shall be relative for multi-purpose use with certificates from independent testing resources to be made available upon request.
   2. Test results shall be no more than 5 years old and performed according to ASTM standard testing procedures.

1.4 *DELIVERY, STORAGE AND HANDLING*

A. Delivery:
   Material shall not be delivered until all related work is in place and finished and/or proper storage facilities and conditions can be provided and guaranteed stable according to FieldTurf USA, Inc. recommendations.

B. Storage:
   1. Store the material in a secure, clean and dry location.
   2. Maintain temperature between 55° and 85° Fahrenheit.
   3. Store the indoor resilient athletic surfacing rolls in an upright position on a smooth flat surface immediately upon delivery to jobsite.
   4. Rolls shipped in rigid protective cardboard containers can be laid horizontally prior to unpacking and installation.

1.5 *PROJECT/SITE CONDITIONS*

A. It is the responsibility of the general contractor/construction manager to maintain project/site conditions acceptable for the installation of the indoor resilient multipurpose flooring.

B. The area in which the indoor resilient multipurpose surfacing will be installed shall be dry and weather tight. Permanent heat, light and ventilation shall be installed and operable.

C. All other trades shall have completed their work prior to the installation of the resilient athletic flooring. The general contractor or construction manager shall maintain a secure and clean working environment before, during and after the installation.

D. Maintain a stable room temperature of at least 65°F for a minimum of one (1) week prior to, during and thereafter installation.

E. An effective low-permeance vapor barrier is placed directly beneath the concrete subfloor. For "on" or "below grade" installations, it is recommended to provide a permanent vapor barrier resistant to long term hydrostatic pressure/moisture exposure. Protrusions should be sealed to prevent moisture migration into the slab. Moisture should not be allowed to enter the slab after the completed construction.

F. Concrete subfloor surface pH level within the 7 to 11 range dependent upon installation type.

G. Concrete subfloor should be no greater than 1/8" within a 10 ft diameter. This tolerance can be measured in accordance with ASTM E1155. A specified (F_F) of 50 and an (F_L) of 30 should reach this degree of floor flatness and floor level. There is no numerical correlation between F numbers and the deviation from the straight

edge. However, the above specified numbers should achieve a flat floor with minimal deviation in the slab. Reference ACI 117 and ACI 302.1R. The general contractor should provide a certificate of compliance with the above recommendations.

H. Concrete subfloor must be clean and free of all foreign materials or objects including, but not limited to, curing compounds and sealers.

I. Fill cracks, grooves, voids, depressions, and other minor imperfections. Follow the manufacturer's directions. Moveable joints must be treated utilizing specific transitioning joint devices depending upon the architect's recommendations. Follow current ASTM F710 guidelines for the preparation of concrete slabs to receive resilient flooring.

J. Refer to ACI 302.2R "Guidelines for Concrete Slabs that Receive Moisture-Sensitive Flooring Materials" for concrete design and construction.

K. Concrete slab shall be fortified with continual steel reinforcement. Fiber reinforcement alone shall not be considered adequate fortification.

1.6 *WARRANTY*

A. Materials:
The indoor resilient athletic surfacing shall be covered by the manufacturer against surfacing product defects for 30 years. The manufacturer of the indoor resilient multipurpose surfacing must provide this warranty upon request.

B. Installation:
The installation of the indoor resilient multipurpose surfacing shall be covered against poor workmanship and faulty installation by a two (2) year written, limited warranty provided by the contractor performing/overseeing the installation.

1.7 *ADDITIONAL MATERIALS*

A. Furnish to the owner additional materials containing a total of at least 1% of each different color or design of the indoor resilient athletic surfacing used on the project.

1.8 *LEED™ CERTIFICATION*

A. The indoor resilient athletic surfacing should be able to help this facility to achieve points towards *LEED™ certification.* Flooring system must be certified by FloorScore.

B. LEED categories positively affected by the indoor resilient athletic surfacing:

Product Type			PU with Recycled Base Layer
Building Reuse Maintain Interior Nonstructural Elements	**MR 1.2**	Renovation	1
Construction Waste Management	**MR 2**	Renovation	2
Recycled Content	**MR 4** **20% - 2 points**	New/Renovation	2
Regional Materials	**MR 5** **20% - 2 points**	New/Renovation	2
Materials and Resources Rapidly Renewable Materials	**MR 6**	New/Renovation	1
Indoor Environmental Air Quality Low VOC Adhesives/Sealants	**IEQ 4.1**	New/Renovation	1
Low-emitting Materials Paints and Coatings	**IEQ 4.2**	New/Renovation	1

PART 2 - PRODUCTS

2.1 *MANUFACTURERS*

A. The basis of the design for the indoor resilient multipurpose surfacing is Polyturf Plus Pad and Pour 4+ 2 and Lumaflex system as manufactured by Tarkett.
B. All other installation accessories and related components must be either made or approved by the indoor resilient athletic surfacing manufacturer.
C. Other products may be approved as equal if deemed qualified and submitted in accordance with the General Conditions.
D. Test reports confirming compliance from an independent sports laboratory must be provided along with samples, technical data, installation, maintenance, and warranty prior to acceptance as an alternative product.

2.2 *MATERIALS*

Flooring System:
Polyturf Plus 4+2 (6mm total thickness) consists of a recycled resilient sheet force reduction layer integrated with seamless, liquid applied, and self-leveling 2 mm polyurethane topcoat.

A durable protective color coat shall be applied to a thickness of approximately 7 mils. The finished product shall be a seamless surface heterogeneous resilient multipurpose synthetic flooring system. System shall comply with the following criteria. Colors to be selected from manufacturer's standard range.

The Lumaflex System shall incorporate Lumaflex double tongue and grooved multi-ply engineered panels, force reduction cushion, and appropriate vapor retarder.

A. Physical properties of the indoor resilient athletic surfacing shall conform to the following minimums:

Properties	Standards	PolyTurf Plus Pad & Pour Base Mat + Wear Coat +Top Coat		
Base Mat Properties				
Width		59″		
Length		82 lin. ft		
Weight		1.2 lb/sq ft		
Density	ASTM D297	.67 min (g/cm□)		
Tensile Strength	ASTM D412	88 psi (Die Cast C)		
Elongation	ASTM D412	48.5% (Die Cast C)		
Compression	ASTM F36	@50 psi	@100 psi	@200 psi
		87%	91%	91%
Tear Strength	ASTM D624	30 PPI Die C		
Flexibility	ASTM F147	0-1		
Compression Set B	ASTM D395	37% (25% deflection 158°F/22hrs)		
Compression Set B	ASTM D395	26% (50% deflection 158°F/22hrs)		
2mm Wear Coat Properties				
Shore Hardness	Shore A	80		
Tensile Strength	ASTM D412	1600psi		
Elongation	ASTM D412	150%		
Tear Strength	ASTM D624	122PLI		
Misc Techical				
Environmental Certification	GreenGuard	GreenGuard Plus Certified		
Sports Characteristics				
Overall Thickness			37 mm	
Shock Absorption	ASTM F2772		Class 4	
Ball Bounce	ASTM F2772	>90%		
Vertical Deformation	ASTM F2772	Passed		
Surface Finish Effect	ASTM F2772	Passed		

B. Adhesive: As approved by the indoor resilient athletic surfacing manufacturer.

C. Game Line Paint and Primer: As approved by the indoor resilient athletic surfacing manufacturer.

D. Colors selected from standard color range.

PART 3 - EXECUTION

3.1 *EXAMINATION*

A. It is the responsibility of the general contractor/construction manager to ensure that project/site conditions are acceptable for the installation of the indoor resilient athletic flooring.
B. Verify that the area in which the indoor resilient athletic surfacing will be installed is dry and weather tight. Verify that permanent heat, light and ventilation are installed and operable.
C. Verify that all other work that could cause damage, dirt and dust or interrupt the normal pace of the indoor resilient athletic flooring installation is completed or suspended.
D. Verify that there is a stable room temperature of at least 65°F.
E. Verify that there are no foreign materials or objects on the subfloor and that the subfloor is clean and ready for installation.
F. *Concrete Subfloor: moisture content less than 85% RH when tested per ASTM F2170.*
G. Follow Fieldturf USA, Inc. installation recommendations.
H. Do not average the results of the tests. Report all field test results in writing to the General Contractor, Architect, and End User prior to installation.
I. Verify that the concrete subfloor surface pH level is within the 7 - 11 range.
J. Document the results confirming the slab is within manufacturer's tolerances for slab deviation.

3.2 *PREPARATION OF SURFACES*

A. Sand the entire surface of the concrete slab.
B. Sweep the concrete slab so as to remove all dirt and dust. If a sweeping compound is to be used it must be a sweeping compound that does not contain oil or other items that may inhibit the adhesive bond.
C. Slab must be dust free. In the event that dust impairs adhesive bond, priming the slab prior to application of adhesive may be necessary. Follow installation guidelines.
D. Follow OSHA guidelines.

3.3 *INSTALLATION*

A. The installation area shall be closed to all traffic and activity for a period to be set by the indoor resilient athletic surfacing installer. The indoor resilient athletic surfacing installation shall not begin until the installer is familiar with the existing conditions.
B. All necessary precautions should be taken to minimize noise, smell, dust, the use of hazardous materials and any other items that may inconvenience others.
C. Install the indoor resilient athletic surfacing in strict accordance with the indoor resilient athletic surfacing manufacturer's written instructions.
D. Paint game lines using approved game line paint primer and game line paint in strict accordance with the game line paint manufacturer's instructions.
E. Install appropriate threshold plates or transition strips where necessary.

2.0 *CLEANING*

A. Remove all unused materials, tools, and equipment and dispose of any debris properly. Clean the indoor resilient athletic surfacing in accordance with the manufacturer's instructions.

3.6 *PROTECTION*

A. If required, protect the indoor resilient athletic surfacing from damage using coverings approved by the manufacturer until acceptance of work by the customer or their authorized representative.

3.7 *RELATED STANDARDS AND GUIDELINES*

A. ASTM F2170 "Standard Test Method for Determining Relative Humidity In Concrete Floor Slabs Using In-Situ Probes"
B. ASTM F710 "Standard Practice for Preparing Concrete Floors to Receive Resilient Flooring"
C. ACI 302.2R-06 "Guideline for Concrete Slabs that Receive Moisture-Sensitive Flooring Materials"
D. ASTM F2772-11 "Standard Specification for Athletic Performance Properties of Indoor Sports Floor Systems"

END OF SECTION

SECTION 09 65 66
ARCHITECTURAL SPECIFICATIONS FOR INDOOR RESILIENT ATHLETIC SURFACING

PART 1 – GENERAL

1.1 *SECTION INCLUDES*

A. Supply and installation of the indoor resilient multipurpose surfacing
B. Application of the game lines
C. References for the correct construction and preparation of concrete slabs to receive resilient flooring.

1.2 *SUBMITTALS*

A. Product Data:
   1. Manufacturer's promotional brochures, specifications and installation instructions
B. Manufacturer Certifications:
   1. Provide certification that accurately identifies the Original Equipment Manufacturer (OEM) of flooring furnished for this project including manufacturer's name, address and factory location.
   2. Suppliers of private label flooring for this project must identify themselves as such and fully disclose the OEM information listed above.
   3. All "manufacturer" requirements in these specifications must be complied with by the OEM, including warranties, certifications, qualifications, product data, test results, environmental requirements, performance data, etc.
C. Samples:
   1. Submit for selection and approval three (3) sets of the indoor resilient multipurpose surfacing, manufacturer's brochures, samples or sample boards of all of the available colors, textures and styles.
   2. Submit color samples of all the available game line paint colors for selection and approval.
D. Closeout Submittals:
   1. Submit three (3) copies of the indoor resilient multipurpose surfacing and manufacturer's maintenance instructions.
   2. Submit three (3) copies of the material and installation warranties as specified.

1.3 *QUALITY ASSURANCE*

A. Qualifications:
   1. The indoor resilient multipurpose surfacing shall have been actively marketed for a minimum of ten (10) years.
   2. The indoor resilient multipurpose surfacing shall be manufactured in an ISO 9001 certified plant.
   3. The indoor resilient multipurpose surfacing shall be manufactured in an ISO 14001 certified plant.
   4. The indoor resilient multipurpose surfacing supplier shall be an established firm, experienced in the field, and competent in the techniques required by the manufacturer.
   5. The installer of the indoor resilient multipurpose surfacing shall have a minimum of five (5) years of experience in the field installing indoor resilient multipurpose surfacing and have worked on at least five (5) projects of similar size, type and complexity.

B. Certifications:
   1. Installer to submit the indoor resilient athletic surfacing manufacturer's certification attesting that they are a trained installer of the indoor resilient multipurpose surfacing.
   2. The indoor resilient multipurpose surfacing manufacturer to submit official ISO 9001 certification for the facility in which the indoor resilient multipurpose surfacing is manufactured.

C. Testing:
   1. Tests shall be relative for multi-purpose use with certificates from independent testing resources to be made available upon request.
   2. Test results shall be no more than 5 years old and performed according to ASTM standard testing procedures.

1.4 *DELIVERY, STORAGE AND HANDLING*

A. Delivery:
   Material shall not be delivered until all related work is in place and finished and/or proper storage facilities and conditions can be provided and guaranteed stable according to FieldTurf USA, Inc. recommendations.

B. Storage:
   1. Store the material in a secure, clean and dry location.
   2. Maintain temperature between 55° and 85° Fahrenheit.
   3. Store the indoor resilient athletic surfacing rolls in an upright position on a smooth flat surface immediately upon delivery to jobsite.
   4. Rolls shipped in rigid protective cardboard containers can be laid horizontally prior to unpacking and installation.

1.5 *PROJECT/SITE CONDITIONS*

A. It is the responsibility of the general contractor/construction manager to maintain project/site conditions acceptable for the installation of the indoor resilient multipurpose flooring.

B. The area in which the indoor resilient multipurpose surfacing will be installed shall be dry and weather tight. Permanent heat, light and ventilation shall be installed and operable.

C. All other trades shall have completed their work prior to the installation of the resilient athletic flooring. The general contractor or construction manager shall maintain a secure and clean working environment before, during and after the installation.

D. Maintain a stable room temperature of at least 65°F for a minimum of one (1) week prior to, during and thereafter installation.

E. An effective low-permeance vapor barrier is placed directly beneath the concrete subfloor. For "on" or "below grade" installations, it is recommended to provide a permanent vapor barrier resistant to long term hydrostatic pressure/moisture exposure. Protrusions should be sealed to prevent moisture migration into the slab. Moisture should not be allowed to enter the slab after the completed construction.

F. Concrete subfloor surface pH level within the 7 to 11 range dependent upon installation type.

G. Concrete subfloor should be no greater than 1/8" within a 10 ft diameter. This tolerance can be measured in accordance with ASTM E1155. A specified (F_F) of 50 and an (F_L) of 30 should reach this degree of floor flatness and floor level. There is no numerical correlation between F numbers and the deviation from the straight

edge. However, the above specified numbers should achieve a flat floor with minimal deviation in the slab. Reference ACI 117 and ACI 302.1R. The general contractor should provide a certificate of compliance with the above recommendations.

H. Concrete subfloor must be clean and free of all foreign materials or objects including, but not limited to, curing compounds and sealers.

I. Fill cracks, grooves, voids, depressions, and other minor imperfections. Follow the manufacturer's directions. Moveable joints must be treated utilizing specific transitioning joint devices depending upon the architect's recommendations. Follow current ASTM F710 guidelines for the preparation of concrete slabs to receive resilient flooring.

J. Refer to ACI 302.2R "Guidelines for Concrete Slabs that Receive Moisture-Sensitive Flooring Materials" for concrete design and construction.

K. Concrete slab shall be fortified with continual steel reinforcement. Fiber reinforcement alone shall not be considered adequate fortification.

1.6 *WARRANTY*

A. Materials:
The indoor resilient athletic surfacing shall be covered by the manufacturer against surfacing product defects for 30 years. The manufacturer of the indoor resilient multipurpose surfacing must provide this warranty upon request.

B. Installation:
The installation of the indoor resilient multipurpose surfacing shall be covered against poor workmanship and faulty installation by a two (2) year written, limited warranty provided by the contractor performing/overseeing the installation.

1.7 *ADDITIONAL MATERIALS*

A. Furnish to the owner additional materials containing a total of at least 1% of each different color or design of the indoor resilient athletic surfacing used on the project.

1.8 *LEED™ CERTIFICATION*

A. The indoor resilient athletic surfacing should be able to help this facility to achieve points towards *LEED™ certification.* Flooring system must be certified by FloorScore.

B. LEED categories positively affected by the indoor resilient athletic surfacing:

Product Type			PU with Recycled Base Layer
Building Reuse Maintain Interior Nonstructural Elements	**MR 1.2**	Renovation	1
Construction Waste Management	**MR 2**	Renovation	2
Recycled Content	**MR 4** **20% - 2 points**	New/Renovation	2
Regional Materials	**MR 5** **20% - 2 points**	New/Renovation	2
Materials and Resources Rapidly Renewable Materials	**MR 6**	New/Renovation	1
Indoor Environmental Air Quality Low VOC Adhesives/Sealants	**IEQ 4.1**	New/Renovation	1
Low-emitting Materials Paints and Coatings	**IEQ 4.2**	New/Renovation	1

PART 2 - PRODUCTS

2.1 *MANUFACTURERS*

A. The basis of the design for the indoor resilient multipurpose surfacing is Polyturf Plus Elite Pad and Pour 7+2 and Lumaflex system as manufactured by Tarkett.
B. All other installation accessories and related components must be either made or approved by the indoor resilient athletic surfacing manufacturer.
C. Other products may be approved as equal if deemed qualified and submitted in accordance with the General Conditions.
D. Test reports confirming compliance from an independent sports laboratory must be provided along with samples, technical data, installation, maintenance, and warranty prior to acceptance as an alternative product.

2.2 *MATERIALS*

Flooring System:
Polyturf Plus Elite 7+2 (9mm total thickness) consists of a recycled resilient sheet force reduction layer integrated with seamless, liquid applied, and self-leveling 2 mm polyurethane topcoat.

A durable protective color coat shall be applied to a thickness of approximately 7 mils. The finished product shall be a seamless surface heterogeneous resilient multipurpose synthetic flooring system. System shall comply with the following criteria. Colors to be selected from manufacturer's standard range.

The Lumaflex System shall incorporate Lumaflex double tongue and grooved multi-ply engineered panels, force reduction cushion, and appropriate vapor retarder.

A. Physical properties of the indoor resilient athletic surfacing shall conform to the following minimums:

Properties	Standards	PolyTurf Plus Pad & Pour Base Mat + Wear Coat +Top Coat		
Base Mat Properties				
Width		59″		
Length		82 lin. ft		
Weight		1.2 lb/sq ft		
Density	ASTM D297	.67 min (g/cm□)		
Tensile Strength	ASTM D412	88 psi (Die Cast C)		
Elongation	ASTM D412	48.5% (Die Cast C)		
Compression	ASTM F36	@50 psi	@100 psi	@200 psi
		87%	91%	91%
Tear Strength	ASTM D624	30 PPI Die C		
Flexibility	ASTM F147	0-1		
Compression Set B	ASTM D395	37% (25% deflection 158°F/22hrs)		
Compression Set B	ASTM D395	26% (50% deflection 158°F/22hrs)		
2mm Wear Coat Properties				
Shore Hardness	Shore A	80		
Tensile Strength	ASTM D412	1600psi		
Elongation	ASTM D412	150%		
Tear Strength	ASTM D624	122PLI		
Misc Techical				
Environmental Certification	GreenGuard	GreenGuard Plus Certified		
Sports Characteristics				
Overall Thickness			40 mm	
Shock Absorption	ASTM F2772		Class 5	
Ball Bounce	ASTM F2772	>90%		
Vertical Deformation	ASTM F2772	Passed		
Surface Finish Effect	ASTM F2772	Passed		

B. Adhesive: As approved by the indoor resilient athletic surfacing manufacturer.
C. Game Line Paint and Primer: As approved by the indoor resilient athletic surfacing manufacturer.
D. Colors selected from standard color range.

PART 3 - EXECUTION

3.1 *EXAMINATION*

A. It is the responsibility of the general contractor/construction manager to ensure that project/site conditions are acceptable for the installation of the indoor resilient athletic flooring.
B. Verify that the area in which the indoor resilient athletic surfacing will be installed is dry and weather tight. Verify that permanent heat, light and ventilation are installed and operable.
C. Verify that all other work that could cause damage, dirt and dust or interrupt the normal pace of the indoor resilient athletic flooring installation is completed or suspended.
D. Verify that there is a stable room temperature of at least 65°F.
E. Verify that there are no foreign materials or objects on the subfloor and that the subfloor is clean and ready for installation.
F. *Concrete Subfloor: moisture content less than 85% RH when tested per ASTM F2170.*
G. Follow Fieldturf USA, Inc. installation recommendations.
H. Do not average the results of the tests. Report all field test results in writing to the General Contractor, Architect, and End User prior to installation.
I. Verify that the concrete subfloor surface pH level is within the 7 - 11 range.
J. Document the results confirming the slab is within manufacturer's tolerances for slab deviation.

3.2 *PREPARATION OF SURFACES*

A. Sand the entire surface of the concrete slab.
B. Sweep the concrete slab so as to remove all dirt and dust. If a sweeping compound is to be used it must be a sweeping compound that does not contain oil or other items that may inhibit the adhesive bond.
C. Slab must be dust free. In the event that dust impairs adhesive bond, priming the slab prior to application of adhesive may be necessary. Follow installation guidelines.
D. Follow OSHA guidelines.

3.3 *INSTALLATION*

A. The installation area shall be closed to all traffic and activity for a period to be set by the indoor resilient athletic surfacing installer. The indoor resilient athletic surfacing installation shall not begin until the installer is familiar with the existing conditions.
B. All necessary precautions should be taken to minimize noise, smell, dust, the use of hazardous materials and any other items that may inconvenience others.
C. Install the indoor resilient athletic surfacing in strict accordance with the indoor resilient athletic surfacing manufacturer's written instructions.
D. Paint game lines using approved game line paint primer and game line paint in strict accordance with the game line paint manufacturer's instructions.
E. Install appropriate threshold plates or transition strips where necessary.

2.0 *CLEANING*

A. Remove all unused materials, tools, and equipment and dispose of any debris properly. Clean the indoor resilient athletic surfacing in accordance with the manufacturer's instructions.

3.6 *PROTECTION*

A. If required, protect the indoor resilient athletic surfacing from damage using coverings approved by the manufacturer until acceptance of work by the customer or their authorized representative.

3.7 *RELATED STANDARDS AND GUIDELINES*

A. ASTM F2170 "Standard Test Method for Determining Relative Humidity In Concrete Floor Slabs Using In-Situ Probes"
B. ASTM F710 "Standard Practice for Preparing Concrete Floors to Receive Resilient Flooring"
C. ACI 302.2R-06 "Guideline for Concrete Slabs that Receive Moisture-Sensitive Flooring Materials"
D. ASTM F2772-11 "Standard Specification for Athletic Performance Properties of Indoor Sports Floor Systems"

END OF SECTION

SECTION 09 65 66
ARCHITECTURAL SPECIFICATIONS FOR INDOOR RESILIENT ATHLETIC SURFACING

PART 1 – GENERAL

1.1 *SECTION INCLUDES*

A. Supply and installation of the indoor resilient multipurpose surfacing
B. Application of the game lines
C. References for the correct construction and preparation of concrete slabs to receive resilient flooring.

1.2 *SUBMITTALS*

A. Product Data:
   1. Manufacturer's promotional brochures, specifications and installation instructions
B. Manufacturer Certifications:
   1. Provide certification that accurately identifies the Original Equipment Manufacturer (OEM) of flooring furnished for this project including manufacturer's name, address and factory location.
   2. Suppliers of private label flooring for this project must identify themselves as such and fully disclose the OEM information listed above.
   3. All "manufacturer" requirements in these specifications must be complied with by the OEM, including warranties, certifications, qualifications, product data, test results, environmental requirements, performance data, etc.
C. Samples:
   1. Submit for selection and approval three (3) sets of the indoor resilient multipurpose surfacing, manufacturer's brochures, samples or sample boards of all of the available colors, textures and styles.
   2. Submit color samples of all the available game line paint colors for selection and approval.
D. Closeout Submittals:
   1. Submit three (3) copies of the indoor resilient multipurpose surfacing and manufacturer's maintenance instructions.
   2. Submit three (3) copies of the material and installation warranties as specified.

1.3 *QUALITY ASSURANCE*

A. Qualifications:
   1. The indoor resilient multipurpose surfacing shall have been actively marketed for a minimum of ten (10) years.
   2. The indoor resilient multipurpose surfacing shall be manufactured in an ISO 9001 certified plant.
   3. The indoor resilient multipurpose surfacing shall be manufactured in an ISO 14001 certified plant.
   4. The indoor resilient multipurpose surfacing supplier shall be an established firm, experienced in the field, and competent in the techniques required by the manufacturer.
   5. The installer of the indoor resilient multipurpose surfacing shall have a minimum of five (5) years of experience in the field installing indoor resilient multipurpose surfacing and have worked on at least five (5) projects of similar size, type and complexity.

B. Certifications:
   1. Installer to submit the indoor resilient athletic surfacing manufacturer's certification attesting that they are a trained installer of the indoor resilient multipurpose surfacing.
   2. The indoor resilient multipurpose surfacing manufacturer to submit official ISO 9001 certification for the facility in which the indoor resilient multipurpose surfacing is manufactured.

C. Testing:
   1. Tests shall be relative for multi-purpose use with certificates from independent testing resources to be made available upon request.
   2. Test results shall be no more than 5 years old and performed according to ASTM standard testing procedures.

1.4 *DELIVERY, STORAGE AND HANDLING*

A. Delivery:
   Material shall not be delivered until all related work is in place and finished and/or proper storage facilities and conditions can be provided and guaranteed stable according to FieldTurf USA, Inc. recommendations.

B. Storage:
   1. Store the material in a secure, clean and dry location.
   2. Maintain temperature between 55° and 85° Fahrenheit.
   3. Store the indoor resilient athletic surfacing rolls in an upright position on a smooth flat surface immediately upon delivery to jobsite.
   4. Rolls shipped in rigid protective cardboard containers can be laid horizontally prior to unpacking and installation.

1.5 *PROJECT/SITE CONDITIONS*

A. It is the responsibility of the general contractor/construction manager to maintain project/site conditions acceptable for the installation of the indoor resilient multipurpose flooring.

B. The area in which the indoor resilient multipurpose surfacing will be installed shall be dry and weather tight. Permanent heat, light and ventilation shall be installed and operable.

C. All other trades shall have completed their work prior to the installation of the resilient athletic flooring. The general contractor or construction manager shall maintain a secure and clean working environment before, during and after the installation.

D. Maintain a stable room temperature of at least 65°F for a minimum of one (1) week prior to, during and thereafter installation.

E. An effective low-permeance vapor barrier is placed directly beneath the concrete subfloor. For "on" or "below grade" installations, it is recommended to provide a permanent vapor barrier resistant to long term hydrostatic pressure/moisture exposure. Protrusions should be sealed to prevent moisture migration into the slab. Moisture should not be allowed to enter the slab after the completed construction.

F. Concrete subfloor surface pH level within the 7 to 11 range dependent upon installation type.

G. Concrete subfloor should be no greater than 1/8" within a 10 ft diameter. This tolerance can be measured in accordance with ASTM E1155. A specified (F_F) of 50 and an (F_L) of 30 should reach this degree of floor flatness and floor level. There is no numerical correlation between F numbers and the deviation from the straight

edge. However, the above specified numbers should achieve a flat floor with minimal deviation in the slab. Reference ACI 117 and ACI 302.1R. The general contractor should provide a certificate of compliance with the above recommendations.

H. Concrete subfloor must be clean and free of all foreign materials or objects including, but not limited to, curing compounds and sealers.

I. Fill cracks, grooves, voids, depressions, and other minor imperfections. Follow the manufacturer's directions. Moveable joints must be treated utilizing specific transitioning joint devices depending upon the architect's recommendations. Follow current ASTM F710 guidelines for the preparation of concrete slabs to receive resilient flooring.

J. Refer to ACI 302.2R "Guidelines for Concrete Slabs that Receive Moisture-Sensitive Flooring Materials" for concrete design and construction.

K. Concrete slab shall be fortified with continual steel reinforcement. Fiber reinforcement alone shall not be considered adequate fortification.

1.6 *WARRANTY*

A. Materials:
The indoor resilient athletic surfacing shall be covered by the manufacturer against surfacing product defects for 30 years. The manufacturer of the indoor resilient multipurpose surfacing must provide this warranty upon request.

B. Installation:
The installation of the indoor resilient multipurpose surfacing shall be covered against poor workmanship and faulty installation by a two (2) year written, limited warranty provided by the contractor performing/overseeing the installation.

1.7 *ADDITIONAL MATERIALS*

A. Furnish to the owner additional materials containing a total of at least 1% of each different color or design of the indoor resilient athletic surfacing used on the project.

1.8 *LEED™ CERTIFICATION*

A. The indoor resilient athletic surfacing should be able to help this facility to achieve points towards *LEED™ certification.* Flooring system must be certified by FloorScore.

B. LEED categories positively affected by the indoor resilient athletic surfacing:

Product Type			PU with Recycled Base Layer
Building Reuse Maintain Interior Nonstructural Elements	**MR 1.2**	Renovation	1
Construction Waste Management	**MR 2**	Renovation	2
Recycled Content	**MR 4** **20% - 2 points**	New/Renovation	2
Regional Materials	**MR 5** **20% - 2 points**	New/Renovation	2
Materials and Resources Rapidly Renewable Materials	**MR 6**	New/Renovation	1
Indoor Environmental Air Quality Low VOC Adhesives/Sealants	**IEQ 4.1**	New/Renovation	1
Low-emitting Materials Paints and Coatings	**IEQ 4.2**	New/Renovation	1

PART 2 - PRODUCTS

2.1 *MANUFACTURERS*

A. The basis of the design for the indoor resilient multipurpose surfacing is Polyturf Plus Pad and Pour 7+2 and Lumaflex system as manufactured by Tarkett.
B. All other installation accessories and related components must be either made or approved by the indoor resilient athletic surfacing manufacturer.
C. Other products may be approved as equal if deemed qualified and submitted in accordance with the General Conditions.
D. Test reports confirming compliance from an independent sports laboratory must be provided along with samples, technical data, installation, maintenance, and warranty prior to acceptance as an alternative product.

2.2 *MATERIALS*

Flooring System:
Polyturf Plus Pad and Pour 7+2 (9 mm total thickness) consists of a recycled resilient sheet force reduction layer integrated with seamless, liquid applied, and self-leveling 2 mm polyurethane topcoat.

A durable protective color coat shall be applied to a thickness of approximately 7 mils. The finished product shall be a seamless surface heterogeneous resilient multipurpose synthetic flooring system. System shall comply with the following criteria. Colors to be selected from manufacturer's standard range.

The Lumaflex System shall incorporate Lumaflex double tongue and grooved multi-ply engineered panels, force reduction cushion, and appropriate vapor retarder.

A. Physical properties of the indoor resilient athletic surfacing shall conform to the following minimums:

Properties	Standards	PolyTurf Plus Pad & Pour Base Mat + Wear Coat +Top Coat		
Base Mat Properties				
Width		59″		
Length		82 lin. ft		
Weight		1.2 lb/sq ft		
Density	ASTM D297	.67 min (g/cm□)		
Tensile Strength	ASTM D412	88 psi (Die Cast C)		
Elongation	ASTM D412	48.5% (Die Cast C)		
Compression	ASTM F36	@50 psi	@100 psi	@200 psi
		87%	91%	91%
Tear Strength	ASTM D624	30 PPI Die C		
Flexibility	ASTM F147	0-1		
Compression Set B	ASTM D395	37% (25% deflection 158°F/22hrs)		
Compression Set B	ASTM D395	26% (50% deflection 158°F/22hrs)		
2mm Wear Coat Properties				
Shore Hardness	Shore A	80		
Tensile Strength	ASTM D412	1600psi		
Elongation	ASTM D412	150%		
Tear Strength	ASTM D624	122PLI		
Misc Techical				
Environmental Certification	GreenGuard	GreenGuard Plus Certified		
Sports Characteristics				
Overall Thickness			40 mm	
Shock Absorption	ASTM F2772		Class 4	
Ball Bounce	ASTM F2772	>90%		
Vertical Deformation	ASTM F2772	Passed		
Surface Finish Effect	ASTM F2772	Passed		

B. Adhesive: As approved by the indoor resilient athletic surfacing manufacturer.

C. Game Line Paint and Primer: As approved by the indoor resilient athletic surfacing manufacturer.

D. Colors selected from standard color range.

PART 3 - EXECUTION

3.1 *EXAMINATION*

A. It is the responsibility of the general contractor/construction manager to ensure that project/site conditions are acceptable for the installation of the indoor resilient athletic flooring.
B. Verify that the area in which the indoor resilient athletic surfacing will be installed is dry and weather tight. Verify that permanent heat, light and ventilation are installed and operable.
C. Verify that all other work that could cause damage, dirt and dust or interrupt the normal pace of the indoor resilient athletic flooring installation is completed or suspended.
D. Verify that there is a stable room temperature of at least 65◦F.
E. Verify that there are no foreign materials or objects on the subfloor and that the subfloor is clean and ready for installation.
F. *Concrete Subfloor: moisture content less than 85% RH when tested per ASTM F2170.*
G. Follow Fieldturf USA, Inc. installation recommendations.
H. Do not average the results of the tests. Report all field test results in writing to the General Contractor, Architect, and End User prior to installation.
I. Verify that the concrete subfloor surface pH level is within the 7 - 11 range.
J. Document the results confirming the slab is within manufacturer's tolerances for slab deviation.

3.2 *PREPARATION OF SURFACES*

A. Sand the entire surface of the concrete slab.
B. Sweep the concrete slab so as to remove all dirt and dust. If a sweeping compound is to be used it must be a sweeping compound that does not contain oil or other items that may inhibit the adhesive bond.
C. Slab must be dust free. In the event that dust impairs adhesive bond, priming the slab prior to application of adhesive may be necessary. Follow installation guidelines.
D. Follow OSHA guidelines.

3.3 *INSTALLATION*

A. The installation area shall be closed to all traffic and activity for a period to be set by the indoor resilient athletic surfacing installer. The indoor resilient athletic surfacing installation shall not begin until the installer is familiar with the existing conditions.
B. All necessary precautions should be taken to minimize noise, smell, dust, the use of hazardous materials and any other items that may inconvenience others.
C. Install the indoor resilient athletic surfacing in strict accordance with the indoor resilient athletic surfacing manufacturer's written instructions.
D. Paint game lines using approved game line paint primer and game line paint in strict accordance with the game line paint manufacturer's instructions.
E. Install appropriate threshold plates or transition strips where necessary.

2.0 *CLEANING*

A. Remove all unused materials, tools, and equipment and dispose of any debris properly. Clean the indoor resilient athletic surfacing in accordance with the manufacturer's instructions.

3.6 *PROTECTION*

A. If required, protect the indoor resilient athletic surfacing from damage using coverings approved by the manufacturer until acceptance of work by the customer or their authorized representative.

3.7 *RELATED STANDARDS AND GUIDELINES*

A. ASTM F2170 "Standard Test Method for Determining Relative Humidity In Concrete Floor Slabs Using In-Situ Probes"
B. ASTM F710 "Standard Practice for Preparing Concrete Floors to Receive Resilient Flooring"
C. ACI 302.2R-06 "Guideline for Concrete Slabs that Receive Moisture-Sensitive Flooring Materials"
D. ASTM F2772-11 "Standard Specification for Athletic Performance Properties of Indoor Sports Floor Systems"

END OF SECTION

SECTION 09 65 66
ARCHITECTURAL SPECIFICATIONS FOR INDOOR RESILIENT ATHLETIC SURFACING

PART 1 – GENERAL

1.1 *SECTION INCLUDES*

A. Supply and installation of the indoor resilient multipurpose surfacing
B. Application of the game lines
C. References for the correct construction and preparation of concrete slabs to receive resilient flooring.

1.2 *SUBMITTALS*

A. Product Data:
   1. Manufacturer's promotional brochures, specifications and installation instructions
B. Manufacturer Certifications:
   1. Provide certification that accurately identifies the Original Equipment Manufacturer (OEM) of flooring furnished for this project including manufacturer's name, address and factory location.
   2. Suppliers of private label flooring for this project must identify themselves as such and fully disclose the OEM information listed above.
   3. All "manufacturer" requirements in these specifications must be complied with by the OEM, including warranties, certifications, qualifications, product data, test results, environmental requirements, performance data, etc.
C. Samples:
   1. Submit for selection and approval three (3) sets of the indoor resilient multipurpose surfacing, manufacturer's brochures, samples or sample boards of all of the available colors, textures and styles.
   2. Submit color samples of all the available game line paint colors for selection and approval.
D. Closeout Submittals:
   1. Submit three (3) copies of the indoor resilient multipurpose surfacing and manufacturer's maintenance instructions.
   2. Submit three (3) copies of the material and installation warranties as specified.

1.3 *QUALITY ASSURANCE*

A. Qualifications:
   1. The indoor resilient multipurpose surfacing shall have been actively marketed for a minimum of ten (10) years.
   2. The indoor resilient multipurpose surfacing shall be manufactured in an ISO 9001 certified plant.
   3. The indoor resilient multipurpose surfacing shall be manufactured in an ISO 14001 certified plant.
   4. The indoor resilient multipurpose surfacing supplier shall be an established firm, experienced in the field, and competent in the techniques required by the manufacturer.
   5. The installer of the indoor resilient multipurpose surfacing shall have a minimum of five (5) years of experience in the field installing indoor resilient multipurpose surfacing and have worked on at least five (5) projects of similar size, type and complexity.

B. Certifications:
   1. Installer to submit the indoor resilient athletic surfacing manufacturer's certification attesting that they are a trained installer of the indoor resilient multipurpose surfacing.
   2. The indoor resilient multipurpose surfacing manufacturer to submit official ISO 9001 certification for the facility in which the indoor resilient multipurpose surfacing is manufactured.

C. Testing:
   1. Tests shall be relative for multi-purpose use with certificates from independent testing resources to be made available upon request.
   2. Test results shall be no more than 5 years old and performed according to ASTM standard testing procedures.

1.4 *DELIVERY, STORAGE AND HANDLING*

A. Delivery:
   Material shall not be delivered until all related work is in place and finished and/or proper storage facilities and conditions can be provided and guaranteed stable according to FieldTurf USA, Inc. recommendations.

B. Storage:
   1. Store the material in a secure, clean and dry location.
   2. Maintain temperature between 55° and 85° Fahrenheit.
   3. Store the indoor resilient athletic surfacing rolls in an upright position on a smooth flat surface immediately upon delivery to jobsite.
   4. Rolls shipped in rigid protective cardboard containers can be laid horizontally prior to unpacking and installation.

1.5 *PROJECT/SITE CONDITIONS*

A. It is the responsibility of the general contractor/construction manager to maintain project/site conditions acceptable for the installation of the indoor resilient multipurpose flooring.

B. The area in which the indoor resilient multipurpose surfacing will be installed shall be dry and weather tight. Permanent heat, light and ventilation shall be installed and operable.

C. All other trades shall have completed their work prior to the installation of the resilient athletic flooring. The general contractor or construction manager shall maintain a secure and clean working environment before, during and after the installation.

D. Maintain a stable room temperature of at least 65°F for a minimum of one (1) week prior to, during and thereafter installation.

E. An effective low-permeance vapor barrier is placed directly beneath the concrete subfloor. For "on" or "below grade" installations, it is recommended to provide a permanent vapor barrier resistant to long term hydrostatic pressure/moisture exposure. Protrusions should be sealed to prevent moisture migration into the slab. Moisture should not be allowed to enter the slab after the completed construction.

F. Concrete subfloor surface pH level within the 7 to 11 range dependent upon installation type.

G. Concrete subfloor should be no greater than 1/8" within a 10 ft diameter. This tolerance can be measured in accordance with ASTM E1155. A specified (F_F) of 50 and an (F_L) of 30 should reach this degree of floor flatness and floor level. There is no numerical correlation between F numbers and the deviation from the straight

edge. However, the above specified numbers should achieve a flat floor with minimal deviation in the slab. Reference ACI 117 and ACI 302.1R. The general contractor should provide a certificate of compliance with the above recommendations.

H. Concrete subfloor must be clean and free of all foreign materials or objects including, but not limited to, curing compounds and sealers.

I. Fill cracks, grooves, voids, depressions, and other minor imperfections. Follow the manufacturer's directions. Moveable joints must be treated utilizing specific transitioning joint devices depending upon the architect's recommendations. Follow current ASTM F710 guidelines for the preparation of concrete slabs to receive resilient flooring.

J. Refer to ACI 302.2R "Guidelines for Concrete Slabs that Receive Moisture-Sensitive Flooring Materials" for concrete design and construction.

K. Concrete slab shall be fortified with continual steel reinforcement. Fiber reinforcement alone shall not be considered adequate fortification.

1.6 *WARRANTY*

A. Materials:
The indoor resilient athletic surfacing shall be covered by the manufacturer against surfacing product defects for 30 years. The manufacturer of the indoor resilient multipurpose surfacing must provide this warranty upon request.

B. Installation:
The installation of the indoor resilient multipurpose surfacing shall be covered against poor workmanship and faulty installation by a two (2) year written, limited warranty provided by the contractor performing/overseeing the installation.

1.7 *ADDITIONAL MATERIALS*

A. Furnish to the owner additional materials containing a total of at least 1% of each different color or design of the indoor resilient athletic surfacing used on the project.

1.8 *LEED™ CERTIFICATION*

A. The indoor resilient athletic surfacing should be able to help this facility to achieve points towards *LEED™ certification.* Flooring system must be certified by FloorScore.

B. LEED categories positively affected by the indoor resilient athletic surfacing:

Product Type			PU with Recycled Base Layer
Building Reuse Maintain Interior Nonstructural Elements	**MR 1.2**	Renovation	1
Construction Waste Management	**MR 2**	Renovation	2
Recycled Content	**MR 4** **20% - 2 points**	New/Renovation	2
Regional Materials	**MR 5** **20% - 2 points**	New/Renovation	2
Materials and Resources Rapidly Renewable Materials	**MR 6**	New/Renovation	1
Indoor Environmental Air Quality Low VOC Adhesives/Sealants	**IEQ 4.1**	New/Renovation	1
Low-emitting Materials Paints and Coatings	**IEQ 4.2**	New/Renovation	1

PART 2 - PRODUCTS

2.1 *MANUFACTURERS*

A. The basis of the design for the indoor resilient multipurpose surfacing is Polyturf Plus Elite Pad and Pour 9+2 and Lumaflex system as manufactured by Tarkett.
B. All other installation accessories and related components must be either made or approved by the indoor resilient athletic surfacing manufacturer.
C. Other products may be approved as equal if deemed qualified and submitted in accordance with the General Conditions.
D. Test reports confirming compliance from an independent sports laboratory must be provided along with samples, technical data, installation, maintenance, and warranty prior to acceptance as an alternative product.

2.2 *MATERIALS*

Flooring System:
Polyturf Plus Elite 9+2 (11mm total thickness) consists of a recycled resilient sheet force reduction layer integrated with seamless, liquid applied, and self-leveling 2 mm polyurethane topcoat.

A durable protective color coat shall be applied to a thickness of approximately 7 mils. The finished product shall be a seamless surface heterogeneous resilient multipurpose synthetic flooring system. System shall comply with the following criteria. Colors to be selected from manufacturer's standard range.

The Lumaflex System shall incorporate Lumaflex double tongue and grooved multi-ply engineered panels, force reduction cushion, and appropriate vapor retarder.

A. Physical properties of the indoor resilient athletic surfacing shall conform to the following minimums:

Properties	Standards	PolyTurf Plus Pad & Pour Base Mat + Wear Coat +Top Coat		
Base Mat Properties				
Width		59″		
Length		82 lin. ft		
Weight		1.2 lb/sq ft		
Density	ASTM D297	.67 min (g/cm□)		
Tensile Strength	ASTM D412	88 psi (Die Cast C)		
Elongation	ASTM D412	48.5% (Die Cast C)		
Compression	ASTM F36	@50 psi	@100 psi	@200 psi
		87%	91%	91%
Tear Strength	ASTM D624	30 PPI Die C		
Flexibility	ASTM F147	0-1		
Compression Set B	ASTM D395	37% (25% deflection 158°F/22hrs)		
Compression Set B	ASTM D395	26% (50% deflection 158°F/22hrs)		
2mm Wear Coat Properties				
Shore Hardness	Shore A	80		
Tensile Strength	ASTM D412	1600psi		
Elongation	ASTM D412	150%		
Tear Strength	ASTM D624	122PLI		
Misc Techical				
Environmental Certification	GreenGuard	GreenGuard Plus Certified		
Sports Characteristics				
Overall Thickness			42 mm	
Shock Absorption	ASTM F2772		Class 5	
Ball Bounce	ASTM F2772	>90%		
Vertical Deformation	ASTM F2772	Passed		
Surface Finish Effect	ASTM F2772	Passed		

B. Adhesive: As approved by the indoor resilient athletic surfacing manufacturer.
C. Game Line Paint and Primer: As approved by the indoor resilient athletic surfacing manufacturer.
D. Colors selected from standard color range.

PART 3 - EXECUTION

3.1 *EXAMINATION*

A. It is the responsibility of the general contractor/construction manager to ensure that project/site conditions are acceptable for the installation of the indoor resilient athletic flooring.
B. Verify that the area in which the indoor resilient athletic surfacing will be installed is dry and weather tight. Verify that permanent heat, light and ventilation are installed and operable.
C. Verify that all other work that could cause damage, dirt and dust or interrupt the normal pace of the indoor resilient athletic flooring installation is completed or suspended.
D. Verify that there is a stable room temperature of at least 65°F.
E. Verify that there are no foreign materials or objects on the subfloor and that the subfloor is clean and ready for installation.
F. *Concrete Subfloor: moisture content less than 85% RH when tested per ASTM F2170.*
G. Follow Fieldturf USA, Inc. installation recommendations.
H. Do not average the results of the tests. Report all field test results in writing to the General Contractor, Architect, and End User prior to installation.
I. Verify that the concrete subfloor surface pH level is within the 7 - 11 range.
J. Document the results confirming the slab is within manufacturer's tolerances for slab deviation.

3.2 *PREPARATION OF SURFACES*

A. Sand the entire surface of the concrete slab.
B. Sweep the concrete slab so as to remove all dirt and dust. If a sweeping compound is to be used it must be a sweeping compound that does not contain oil or other items that may inhibit the adhesive bond.
C. Slab must be dust free. In the event that dust impairs adhesive bond, priming the slab prior to application of adhesive may be necessary. Follow installation guidelines.
D. Follow OSHA guidelines.

3.3 *INSTALLATION*

A. The installation area shall be closed to all traffic and activity for a period to be set by the indoor resilient athletic surfacing installer. The indoor resilient athletic surfacing installation shall not begin until the installer is familiar with the existing conditions.
B. All necessary precautions should be taken to minimize noise, smell, dust, the use of hazardous materials and any other items that may inconvenience others.
C. Install the indoor resilient athletic surfacing in strict accordance with the indoor resilient athletic surfacing manufacturer's written instructions.
D. Paint game lines using approved game line paint primer and game line paint in strict accordance with the game line paint manufacturer's instructions.
E. Install appropriate threshold plates or transition strips where necessary.

2.0 *CLEANING*

A. Remove all unused materials, tools, and equipment and dispose of any debris properly. Clean the indoor resilient athletic surfacing in accordance with the manufacturer's instructions.

3.6 *PROTECTION*

A. If required, protect the indoor resilient athletic surfacing from damage using coverings approved by the manufacturer until acceptance of work by the customer or their authorized representative.

3.7 *RELATED STANDARDS AND GUIDELINES*

A. ASTM F2170 "Standard Test Method for Determining Relative Humidity In Concrete Floor Slabs Using In-Situ Probes"
B. ASTM F710 "Standard Practice for Preparing Concrete Floors to Receive Resilient Flooring"
C. ACI 302.2R-06 "Guideline for Concrete Slabs that Receive Moisture-Sensitive Flooring Materials"
D. ASTM F2772-11 "Standard Specification for Athletic Performance Properties of Indoor Sports Floor Systems"

END OF SECTION

SECTION 09 65 66
ARCHITECTURAL SPECIFICATIONS FOR INDOOR RESILIENT ATHLETIC SURFACING

PART 1 – GENERAL

1.1 *SECTION INCLUDES*

A. Supply and installation of the indoor resilient multipurpose surfacing
B. Application of the game lines
C. References for the correct construction and preparation of concrete slabs to receive resilient flooring.

1.2 *SUBMITTALS*

A. Product Data:
   1. Manufacturer's promotional brochures, specifications and installation instructions
B. Manufacturer Certifications:
   1. Provide certification that accurately identifies the Original Equipment Manufacturer (OEM) of flooring furnished for this project including manufacturer's name, address and factory location.
   2. Suppliers of private label flooring for this project must identify themselves as such and fully disclose the OEM information listed above.
   3. All "manufacturer" requirements in these specifications must be complied with by the OEM, including warranties, certifications, qualifications, product data, test results, environmental requirements, performance data, etc.
C. Samples:
   1. Submit for selection and approval three (3) sets of the indoor resilient multipurpose surfacing, manufacturer's brochures, samples or sample boards of all of the available colors, textures and styles.
   2. Submit color samples of all the available game line paint colors for selection and approval.
D. Closeout Submittals:
   1. Submit three (3) copies of the indoor resilient multipurpose surfacing and manufacturer's maintenance instructions.
   2. Submit three (3) copies of the material and installation warranties as specified.

1.3 *QUALITY ASSURANCE*

A. Qualifications:
   1. The indoor resilient multipurpose surfacing shall have been actively marketed for a minimum of ten (10) years.
   2. The indoor resilient multipurpose surfacing shall be manufactured in an ISO 9001 certified plant.
   3. The indoor resilient multipurpose surfacing shall be manufactured in an ISO 14001 certified plant.
   4. The indoor resilient multipurpose surfacing supplier shall be an established firm, experienced in the field, and competent in the techniques required by the manufacturer.
   5. The installer of the indoor resilient multipurpose surfacing shall have a minimum of five (5) years of experience in the field installing indoor resilient multipurpose surfacing and have worked on at least five (5) projects of similar size, type and complexity.

B. Certifications:
   1. Installer to submit the indoor resilient athletic surfacing manufacturer's certification attesting that they are a trained installer of the indoor resilient multipurpose surfacing.
   2. The indoor resilient multipurpose surfacing manufacturer to submit official ISO 9001 certification for the facility in which the indoor resilient multipurpose surfacing is manufactured.

C. Testing:
   1. Tests shall be relative for multi-purpose use with certificates from independent testing resources to be made available upon request.
   2. Test results shall be no more than 5 years old and performed according to ASTM standard testing procedures.

1.4 *DELIVERY, STORAGE AND HANDLING*

A. Delivery:
   Material shall not be delivered until all related work is in place and finished and/or proper storage facilities and conditions can be provided and guaranteed stable according to FieldTurf USA, Inc. recommendations.

B. Storage:
   1. Store the material in a secure, clean and dry location.
   2. Maintain temperature between 55° and 85° Fahrenheit.
   3. Store the indoor resilient athletic surfacing rolls in an upright position on a smooth flat surface immediately upon delivery to jobsite.
   4. Rolls shipped in rigid protective cardboard containers can be laid horizontally prior to unpacking and installation.

1.5 *PROJECT/SITE CONDITIONS*

A. It is the responsibility of the general contractor/construction manager to maintain project/site conditions acceptable for the installation of the indoor resilient multipurpose flooring.

B. The area in which the indoor resilient multipurpose surfacing will be installed shall be dry and weather tight. Permanent heat, light and ventilation shall be installed and operable.

C. All other trades shall have completed their work prior to the installation of the resilient athletic flooring. The general contractor or construction manager shall maintain a secure and clean working environment before, during and after the installation.

D. Maintain a stable room temperature of at least 65°F for a minimum of one (1) week prior to, during and thereafter installation.

E. An effective low-permeance vapor barrier is placed directly beneath the concrete subfloor. For "on" or "below grade" installations, it is recommended to provide a permanent vapor barrier resistant to long term hydrostatic pressure/moisture exposure. Protrusions should be sealed to prevent moisture migration into the slab. Moisture should not be allowed to enter the slab after the completed construction.

F. Concrete subfloor surface pH level within the 7 to 11 range dependent upon installation type.

G. Concrete subfloor should be no greater than 1/8" within a 10 ft diameter. This tolerance can be measured in accordance with ASTM E1155. A specified (F_F) of 50 and an (F_L) of 30 should reach this degree of floor flatness and floor level. There is no numerical correlation between F numbers and the deviation from the straight

edge. However, the above specified numbers should achieve a flat floor with minimal deviation in the slab. Reference ACI 117 and ACI 302.1R. The general contractor should provide a certificate of compliance with the above recommendations.

H. Concrete subfloor must be clean and free of all foreign materials or objects including, but not limited to, curing compounds and sealers.

I. Fill cracks, grooves, voids, depressions, and other minor imperfections. Follow the manufacturer's directions. Moveable joints must be treated utilizing specific transitioning joint devices depending upon the architect's recommendations. Follow current ASTM F710 guidelines for the preparation of concrete slabs to receive resilient flooring.

J. Refer to ACI 302.2R "Guidelines for Concrete Slabs that Receive Moisture-Sensitive Flooring Materials" for concrete design and construction.

K. Concrete slab shall be fortified with continual steel reinforcement. Fiber reinforcement alone shall not be considered adequate fortification.

1.6 *WARRANTY*

A. Materials:
The indoor resilient athletic surfacing shall be covered by the manufacturer against surfacing product defects for 30 years. The manufacturer of the indoor resilient multipurpose surfacing must provide this warranty upon request.

B. Installation:
The installation of the indoor resilient multipurpose surfacing shall be covered against poor workmanship and faulty installation by a two (2) year written, limited warranty provided by the contractor performing/overseeing the installation.

1.7 *ADDITIONAL MATERIALS*

A. Furnish to the owner additional materials containing a total of at least 1% of each different color or design of the indoor resilient athletic surfacing used on the project.

1.8 *LEED™ CERTIFICATION*

A. The indoor resilient athletic surfacing should be able to help this facility to achieve points towards *LEED™ certification.* Flooring system must be certified by FloorScore.

B. LEED categories positively affected by the indoor resilient athletic surfacing:

Product Type			PU with Recycled Base Layer
Building Reuse Maintain Interior Nonstructural Elements	**MR 1.2**	Renovation	1
Construction Waste Management	**MR 2**	Renovation	2
Recycled Content	**MR 4** **20% - 2 points**	New/Renovation	2
Regional Materials	**MR 5** **20% - 2 points**	New/Renovation	2
Materials and Resources Rapidly Renewable Materials	**MR 6**	New/Renovation	1
Indoor Environmental Air Quality Low VOC Adhesives/Sealants	**IEQ 4.1**	New/Renovation	1
Low-emitting Materials Paints and Coatings	**IEQ 4.2**	New/Renovation	1

PART 2 - PRODUCTS

2.1 *MANUFACTURERS*

A. The basis of the design for the indoor resilient multipurpose surfacing is Polyturf Plus Pad and Pour 9+2 and Lumaflex system as manufactured by Tarkett.
B. All other installation accessories and related components must be either made or approved by the indoor resilient athletic surfacing manufacturer.
C. Other products may be approved as equal if deemed qualified and submitted in accordance with the General Conditions.
D. Test reports confirming compliance from an independent sports laboratory must be provided along with samples, technical data, installation, maintenance, and warranty prior to acceptance as an alternative product.

2.2 *MATERIALS*

Flooring System:
Polyturf Plus Pad and Pour 9+2 (11mm total thickness) consists of a recycled resilient sheet force reduction layer integrated with seamless, liquid applied, and self-leveling 2 mm polyurethane topcoat.

A durable protective color coat shall be applied to a thickness of approximately 7 mils. The finished product shall be a seamless surface heterogeneous resilient multipurpose synthetic flooring system. System shall comply with the following criteria. Colors to be selected from manufacturer's standard range.

The Lumaflex System shall incorporate Lumaflex double tongue and grooved multi-ply engineered panels, force reduction cushion, and appropriate vapor retarder.

A. Physical properties of the indoor resilient athletic surfacing shall conform to the following minimums:

Properties	Standards	PolyTurf Plus Pad & Pour Base Mat + Wear Coat +Top Coat		
Base Mat Properties				
Width		59″		
Length		82 lin. ft		
Weight		1.2 lb/sq ft		
Density	ASTM D297	.67 min (g/cm□)		
Tensile Strength	ASTM D412	88 psi (Die Cast C)		
Elongation	ASTM D412	48.5% (Die Cast C)		
Compression	ASTM F36	@50 psi	@100 psi	@200 psi
		87%	91%	91%
Tear Strength	ASTM D624	30 PPI Die C		
Flexibility	ASTM F147	0-1		
Compression Set B	ASTM D395	37% (25% deflection 158°F/22hrs)		
Compression Set B	ASTM D395	26% (50% deflection 158°F/22hrs)		
2mm Wear Coat Properties				
Shore Hardness	Shore A	80		
Tensile Strength	ASTM D412	1600psi		
Elongation	ASTM D412	150%		
Tear Strength	ASTM D624	122PLI		
Misc Techical				
Environmental Certification	GreenGuard	GreenGuard Plus Certified		
Sports Characteristics				
Overall Thickness			42 mm	
Shock Absorption	ASTM F2772		Class 4	
Ball Bounce	ASTM F2772	>90%		
Vertical Deformation	ASTM F2772	Passed		
Surface Finish Effect	ASTM F2772	Passed		

B. Adhesive: As approved by the indoor resilient athletic surfacing manufacturer.

C. Game Line Paint and Primer: As approved by the indoor resilient athletic surfacing manufacturer.

D. Colors selected from standard color range.

PART 3 - EXECUTION

3.1 *EXAMINATION*

A. It is the responsibility of the general contractor/construction manager to ensure that project/site conditions are acceptable for the installation of the indoor resilient athletic flooring.
B. Verify that the area in which the indoor resilient athletic surfacing will be installed is dry and weather tight. Verify that permanent heat, light and ventilation are installed and operable.
C. Verify that all other work that could cause damage, dirt and dust or interrupt the normal pace of the indoor resilient athletic flooring installation is completed or suspended.
D. Verify that there is a stable room temperature of at least 65°F.
E. Verify that there are no foreign materials or objects on the subfloor and that the subfloor is clean and ready for installation.
F. *Concrete Subfloor: moisture content less than 85% RH when tested per ASTM F2170.*
G. Follow Fieldturf USA, Inc. installation recommendations.
H. Do not average the results of the tests. Report all field test results in writing to the General Contractor, Architect, and End User prior to installation.
I. Verify that the concrete subfloor surface pH level is within the 7 - 11 range.
J. Document the results confirming the slab is within manufacturer's tolerances for slab deviation.

3.2 *PREPARATION OF SURFACES*

A. Sand the entire surface of the concrete slab.
B. Sweep the concrete slab so as to remove all dirt and dust. If a sweeping compound is to be used it must be a sweeping compound that does not contain oil or other items that may inhibit the adhesive bond.
C. Slab must be dust free. In the event that dust impairs adhesive bond, priming the slab prior to application of adhesive may be necessary. Follow installation guidelines.
D. Follow OSHA guidelines.

3.3 *INSTALLATION*

A. The installation area shall be closed to all traffic and activity for a period to be set by the indoor resilient athletic surfacing installer. The indoor resilient athletic surfacing installation shall not begin until the installer is familiar with the existing conditions.
B. All necessary precautions should be taken to minimize noise, smell, dust, the use of hazardous materials and any other items that may inconvenience others.
C. Install the indoor resilient athletic surfacing in strict accordance with the indoor resilient athletic surfacing manufacturer's written instructions.
D. Paint game lines using approved game line paint primer and game line paint in strict accordance with the game line paint manufacturer's instructions.
E. Install appropriate threshold plates or transition strips where necessary.

2.0 *CLEANING*

A. Remove all unused materials, tools, and equipment and dispose of any debris properly. Clean the indoor resilient athletic surfacing in accordance with the manufacturer's instructions.

3.6 *PROTECTION*

A. If required, protect the indoor resilient athletic surfacing from damage using coverings approved by the manufacturer until acceptance of work by the customer or their authorized representative.

3.7 *RELATED STANDARDS AND GUIDELINES*

A. ASTM F2170 "Standard Test Method for Determining Relative Humidity In Concrete Floor Slabs Using In-Situ Probes"
B. ASTM F710 "Standard Practice for Preparing Concrete Floors to Receive Resilient Flooring"
C. ACI 302.2R-06 "Guideline for Concrete Slabs that Receive Moisture-Sensitive Flooring Materials"
D. ASTM F2772-11 "Standard Specification for Athletic Performance Properties of Indoor Sports Floor Systems"

END OF SECTION

SECTION 09645
ARCHITECTURAL SPECIFICATIONS FOR INDOOR RESILIENT ATHLETIC SURFACING

PART 1 – GENERAL

1.1 *SECTION INCLUDES*

A. Supply and installation of the indoor resilient multipurpose surfacing
B. Application of the game lines
C. References for the construction and preparation of concrete slabs to receive resilient flooring.

1.2 *SUBMITTALS*

A. Product Data:
Manufacturer's promotional brochures, specifications and installation instructions
B. Samples:
1. Submit for selection and approval three (3) sets of the indoor resilient multipurpose surfacing, manufacturer's brochures, samples or sample boards of all of the available colors, textures and styles.
2. Submit color samples of all the available game line paint colors for selection and approval.
C. Closeout Submittals:
1. Submit three (3) copies of the indoor resilient multipurpose surfacing and manufacturer's maintenance instructions.
2. Submit three (3) copies of the material and installation warranties as specified.

1.3 *QUALITY ASSURANCE*

A. Qualifications:
1. The indoor resilient multipurpose surfacing shall have been actively marketed for a minimum of ten (10) years.
2. The indoor resilient multipurpose surfacing shall be manufactured in an ISO 9001 certified plant.
4. The indoor resilient multipurpose surfacing supplier shall be an established firm, experienced in the field, and appointed as a distributor by the manufacturer of the indoor resilient multipurpose surfacing.
5. The installer of the indoor resilient multipurpose surfacing shall have a minimum of five (5) years of experience in the field installing indoor resilient multipurpose surfacing and have worked on at least five (5) projects of similar size, type and complexity.
B. Certifications:
1. Installer to submit the indoor resilient athletic surfacing manufacturer's certification attesting that they are an approved installer of the indoor resilient multipurpose surfacing.
2. The indoor resilient multipurpose surfacing manufacturer to submit official ISO 9001 certification for the facility in which the indoor resilient multipurpose surfacing is manufactured.

C. Testing:
Tests shall be relative for multi-purpose use with certificates from independent testing resources to be made available upon request. Test results shall be no more than 5 years old and performed according to ASTM standard testing procedures.

B. Certifications:
3. Installer to submit the indoor resilient athletic surfacing manufacturer's or distributor's certification attesting that they are an approved installer of the indoor resilient multipurpose surfacing.

C. Testing:
Tests shall be relative for multi-purpose use with certificates from independent testing resources to be made available upon request. Test results shall be no more than 5 years old and performed according to ASTM F2772 standard testing procedures for force reduction, ball bounce, vertical deformation, and surface finish effect.

1.4 *DELIVERY, STORAGE AND HANDLING*

A. Delivery:
Material shall not be delivered until all related work is in place and finished and/or proper storage facilities and conditions can be provided and guaranteed stable according to Fieldturf' recommendations.

B. Storage:
Store the material in a secure, clean and dry location. Maintain temperature between 55° and 85° Fahrenheit.

1.5 *PROJECT/SITE CONDITIONS*

A. It is the responsibility of the general contractor/construction manager to maintain project/site conditions acceptable for the installation of the indoor resilient multipurpose flooring.

B. The area in which the indoor resilient multipurpose surfacing will be installed shall be dry and weather tight. Permanent heat, light and ventilation shall be installed and operable.

C. All other trades shall have completed their work prior to the installation of the resilient athletic flooring. The general contractor or Construction Manager shall maintain a secure and clean working environment before, during and after the installation. Suspension of other trades' work may be authorized providing their work will not damage the new flooring.

D. Maintain a stable room temperature of at least 65°F for a minimum of one (1) week prior to, during, and thereafter installation.

E. An effective low-permeance vapor barrier is placed directly beneath the concrete subfloor. For "on" or "below grade" installations, it is recommended to provide a permanent vapor barrier resistant to long term hydrostatic pressure/moisture exposure. Protrusions should be sealed to prevent moisture migration into the slab. Moisture should not be allowed to

enter the slab after the completed construction.

F. Concrete subfloor surface pH level within the 7 to 10 range dependent upon installation type.
G. Concrete subfloor should be no greater than 1/8" within a 10 ft diameter. This tolerance can be measured in accordance with ASTM E1155. A specified (F_F) of 50 and an (F_L) of 30 should reach this degree of floor flatness and floor level. There is no numerical correlation between F numbers and the deviation from the straight edge, however the above specified numbers should achieve a flat floor with minimal deviation in the slab. Reference ACI 117 and ACI 302.1R. The general contractor should provide a certificate of compliance with the above recommendations.
H. Concrete subfloor must be clean and free of all foreign materials or objects including, but not limited to, curing compounds and sealers.
I. Fill cracks, grooves, voids, depressions, and other minor imperfections with Ardex (or equal) cement-based patching/leveling compounds. Follow the manufacturer's directions. Moveable joints must be treated utilizing specific transitioning joint devices depending upon the architect's recommendations. Follow current ASTM F710 guidelines for the preparation of concrete slabs to receive resilient flooring.
J. Refer to ACI 302.2R "Guidelines for Concrete Slabs that Receive Moisture-Sensitive Flooring Materials" for concrete design and construction.
K. Concrete slab shall be fortified with continual steel reinforcement. Fiber reinforcement alone shall not be considered adequate fortification.

1.6 *WARRANTY*

A. Materials:
The indoor resilient athletic surfacing shall be covered by the manufacturer against product defects for 30 years and moisture warranty for 10 years. The manufacturer of the indoor resilient multipurpose surfacing must provide this warranty upon request.
B. Installation:
The installation of the indoor resilient multipurpose surfacing shall be covered against poor workmanship and faulty installation by a two (2) year written, limited warranty provided by the contractor performing/overseeing the installation.

1.7 *ADDITIONAL MATERIALS*

Furnish to the owner additional materials containing a total of at least 1% of each different color or design of the indoor resilient athletic surfacing used on the project.

1.8 *LEED™ CERTIFICATION*

The indoor resilient athletic surfacing should be able to help this facility to achieve points towards *LEED™* certification.

LEED categories positively affected by the indoor resilient athletic surfacing:

Product Type			PU with Recycled Base Layer
Building Reuse Maintain Interior Nonstructural Elements	MR 1.2	Renovation	1
Construction Waste Management	MR 2	Renovation	2
Recycled Content	MR 4 20% - 2 points	New/Renovation	2
Regional Materials	MR 5 20% - 2 points	New/Renovation	2
Materials and Resources Rapidly Renewable Materials	MR 6	New/Renovation	1
Indoor Environmental Air Quality Low VOC Adhesives/Sealants	IEQ 4.1	New/Renovation	1
Low-emitting Materials Paints and Coatings	IEQ 4.2	New/Renovation	1

PART 2 - PRODUCTS

2.1 *MANUFACTURERS*

The basis of the design for the indoor resilient multipurpose surfacing is Polyturf Plus Pad and Pour as provided by Fieldturf or equal. Product shall be manufactured by an ISO 9001 company.

2.2 *MATERIALS.*

A.) Flooring System:

Polyturf Plus 12+2 (11mm total thickness) consists of a recycled resilient sheet force reduction layer integrated with seamless, liquid applied, and self-leveling 2 mm polyurethane topcoat.

A durable protective color coat shall be applied to a thickness of approximately 7 mils. The finished product shall be a seamless surface heterogeneous resilient multipurpose synthetic flooring system. System shall comply with the following criteria. Colors to be selected from manufacturer's standard range.

Properties	Standards	PolyTurf Plus Pad & Pour Base Mat + Wear Coat +Top Coat
Base Mat Properties		
Width		59″
Length		82 lin. ft
Weight		1.2 lb/sq ft
Density	ASTM D297	.67 min (g/cm?)
Tensile Strength	ASTM D412	88 psi (Die Cast C)
Elongation	ASTM D412	48.5% (Die Cast C)
Compression	ASTM F36	@50 psi 87% @100 psi 91% @200 psi 91%
Tear Strength	ASTM D624	30 PPI Die C
Flexibility	ASTM F147	0-1
Compression Set B	ASTM D395	37% (25% deflection 158°F/22hrs)
Compression Set B	ASTM D395	26% (50% deflection 158°F/22hrs)
2mm Wear Coat Properties		
Shore Hardness	Shore A	80
Tensile Strength	ASTM D412	3200 psi
Elongation	ASTM D412	340%
Tear Strength	ASTM D624	360 PLI
Misc Techical		
Fire Classification	ASTM E648	Class 1
Environmental Certification	GreenGuard	GreenGuard Plus Certified
Sports Characteristics		
Overall Thickness		12+2 (14mm)
Shock Absorption	ASTM F2772	Class 3
Ball Bounce	ASTM F2772	>90%
Vertical Deformation	ASTM F2772	Passed
Surface Finish Effect	ASTM F2772	Passed
Installation with Multi-Poxy	98% Per ASTM F2170	

Game Line Paint:

As approved by the indoor resilient athletic surfacing manufacturer. Colors are to be selected from the manufacturer's standard range.

PART 3 - EXECUTION

3.1 *EXAMINATION*

A. It is the responsibility of the general contractor/construction manager to ensure that project/site conditions are acceptable for the installation of the indoor resilient athletic flooring.

B. Verify that the area in which the indoor resilient athletic surfacing will be installed is dry and weather tight. Verify that permanent heat, light and ventilation is installed and operable.

C. Verify that all other work that could cause damage, dirt and dust or interrupt the normal pace of the indoor resilient athletic flooring installation is completed or suspended.

D. Verify that there is a stable room temperature of at least 65°F.

E. Verify that there are no foreign materials or objects on the subfloor and that the subfloor is clean and ready for installation.

F. Moisture content less than 98 % RH when tested per ASTM F2170. Follow Fieldturf Installation Recommendations.
G. If both tests are performed, use the highest value. Do not average the results of the tests. Report all field test results in writing to the General Contractor, Architect, and End User prior to installation.
H. Verify that the concrete subfloor surface pH level is within the 7 - 10 range.
I. Document the results indicating the slab is within manufacturer's tolerances for slab deviation.

3.2 *PREPARATION OF SURFACES*

A. Sand the entire surface of the concrete slab.
B. Sweep the concrete slab so as to remove all dirt and dust. If a sweeping compound is to be used it must be a sweeping compound that does not contain oil or other items that may inhibit the adhesive bond.
C. Slab must be dust free. In the event that dust impairs adhesive bond, priming the slab prior to application of adhesive may be necessary. Follow installation guidelines.

3.3 *INSTALLATION*

A. The installation area shall be closed to all traffic and activity for a period to be set by the indoor resilient athletic surfacing installer. The indoor resilient athletic surfacing installation shall not begin until the installer is familiar with the existing conditions.
B. All necessary precautions should be taken to minimize noise, smell, dust, the use of hazardous materials, and any other items that may inconvenience others.
C. Install the indoor resilient athletic surfacing in strict accordance with the indoor resilient athletic surfacing manufacturer's written instructions.
D. Paint game lines using approved game line paint primer and game line paint in strict accordance with the game line paint manufacturer's instructions.
E. Install appropriate threshold plates or transition strips where necessary.
F. Use only approved adhesive as recommended by the manufacturer.

3.4 *CLEANING*

A. Remove all unused materials, tools, and equipment and dispose of any debris properly. Clean the indoor resilient athletic surfacing in accordance with the manufacturer's instructions.

3.5 *PROTECTION*

If required, protect the indoor resilient athletic surfacing from damage using coverings approved by the manufacturer until acceptance of work by the customer or their authorized representative.

3.6 RELATED STANDARDS AND GUIDELINES

A. ASTM F2170 "Standard Test Method for Determining Relative Humidity In Concrete Floor Slabs Using In-Situ Probes"
B. ASTM F710 "Standard Practice for Preparing Concrete Floors to Receive

Resilient Flooring"

C. ACI 302.2R-06 "Guideline for Concrete Slabs that Receive Moisture-Sensitive Flooring Materials"

END OF SECTION

PART 1 – GENERAL

1.1 *SECTION INCLUDES*

A. Supply and installation of the indoor resilient multipurpose surfacing
B. Application of the game lines
C. References for the construction and preparation of concrete slabs to receive resilient flooring.

1.2 *SUBMITTALS*

A. Product Data:
Manufacturer's promotional brochures, specifications and installation instructions
B. Samples:
1. Submit for selection and approval three (3) sets of the indoor resilient multipurpose surfacing, manufacturer's brochures, samples or sample boards of all of the available colors, textures and styles.
2. Submit color samples of all the available game line paint colors for selection and approval.
C. Closeout Submittals:
1. Submit three (3) copies of the indoor resilient multipurpose surfacing and manufacturer's maintenance instructions.
2. Submit three (3) copies of the material and installation warranties as specified.

1.3 *QUALITY ASSURANCE*

A. Qualifications:
1. The indoor resilient multipurpose surfacing shall have been actively marketed for a minimum of ten (10) years.
2. The indoor resilient multipurpose surfacing shall be manufactured in an ISO 9001 certified plant.
4. The indoor resilient multipurpose surfacing supplier shall be an established firm, experienced in the field, and appointed as a distributor by the manufacturer of the indoor resilient multipurpose surfacing.
5. The installer of the indoor resilient multipurpose surfacing shall have a minimum of five (5) years of experience in the field installing indoor resilient multipurpose surfacing and have worked on at least five (5) projects of similar size, type and complexity.
B. Certifications:
1. Installer to submit the indoor resilient athletic surfacing manufacturer's certification attesting that they are an approved installer of the indoor resilient multipurpose surfacing.
2. The indoor resilient multipurpose surfacing manufacturer to submit official ISO 9001 certification for the facility in which the indoor resilient multipurpose surfacing is manufactured.

C. Testing:
Tests shall be relative for multi-purpose use with certificates from independent testing resources to be made available upon request. Test

results shall be no more than 5 years old and performed according to ASTM standard testing procedures.

B. Certifications:
   3. Installer to submit the indoor resilient athletic surfacing manufacturer's or distributor's certification attesting that they are an approved installer of the indoor resilient multipurpose surfacing.

C. Testing:
   Tests shall be relative for multi-purpose use with certificates from independent testing resources to be made available upon request. Test results shall be no more than 5 years old and performed according to ASTM F2772 standard testing procedures for force reduction, ball bounce, vertical deformation, and surface finish effect.

1.4 *DELIVERY, STORAGE AND HANDLING*

A. Delivery:
   Material shall not be delivered until all related work is in place and finished and/or proper storage facilities and conditions can be provided and guaranteed stable according to Fieldturf' recommendations.
B. Storage:
   Store the material in a secure, clean and dry location. Maintain temperature between 55° and 85° Fahrenheit.

1.5 *PROJECT/SITE CONDITIONS*

A. It is the responsibility of the general contractor/construction manager to maintain project/site conditions acceptable for the installation of the indoor resilient multipurpose flooring.
B. The area in which the indoor resilient multipurpose surfacing will be installed shall be dry and weather tight. Permanent heat, light and ventilation shall be installed and operable.
C. All other trades shall have completed their work prior to the installation of the resilient athletic flooring. The general contractor or Construction Manager shall maintain a secure and clean working environment before, during and after the installation. Suspension of other trades' work may be authorized providing their work will not damage the new flooring.
D. Maintain a stable room temperature of at least 65°F for a minimum of one (1) week prior to, during, and thereafter installation.
E. An effective low-permeance vapor barrier is placed directly beneath the concrete subfloor. For "on" or "below grade" installations, it is recommended to provide a permanent vapor barrier resistant to long term hydrostatic pressure/moisture exposure. Protrusions should be sealed to prevent moisture migration into the slab. Moisture should not be allowed to enter the slab after the completed construction.
F. Concrete subfloor surface pH level within the 7 to 10 range dependent upon installation type.
G. Concrete subfloor should be no greater than 1/8" within a 10 ft diameter. This tolerance can be measured in accordance with ASTM E1155.
   A specified (F_F) of 50 and an (F_L) of 30 should reach this degree of floor

flatness and floor level. There is no numerical correlation between F numbers and the deviation from the straight edge, however the above specified numbers should achieve a flat floor with minimal deviation in the slab. Reference ACI 117 and ACI 302.1R. The general contractor should provide a certificate of compliance with the above recommendations.

H. Concrete subfloor must be clean and free of all foreign materials or objects including, but not limited to, curing compounds and sealers.

I. Fill cracks, grooves, voids, depressions, and other minor imperfections with Ardex (or equal) cement-based patching/leveling compounds. Follow the manufacturer's directions. Moveable joints must be treated utilizing specific transitioning joint devices depending upon the architect's recommendations. Follow current ASTM F710 guidelines for the preparation of concrete slabs to receive resilient flooring.

J. Refer to ACI 302.2R "Guidelines for Concrete Slabs that Receive Moisture-Sensitive Flooring Materials" for concrete design and construction.

K. Concrete slab shall be fortified with continual steel reinforcement. Fiber reinforcement alone shall not be considered adequate fortification.

1.6 *WARRANTY*

A. Materials:
The indoor resilient athletic surfacing shall be covered by the manufacturer against product defects for 30 years and moisture warranty for 10 years. The manufacturer of the indoor resilient multipurpose surfacing must provide this warranty upon request.

B. Installation:
The installation of the indoor resilient multipurpose surfacing shall be covered against poor workmanship and faulty installation by a two (2) year written, limited warranty provided by the contractor performing/overseeing the installation.

1.7 *ADDITIONAL MATERIALS*

Furnish to the owner additional materials containing a total of at least 1% of each different color or design of the indoor resilient athletic surfacing used on the project.

1.8 *LEED™ CERTIFICATION*

The indoor resilient athletic surfacing should be able to help this facility to achieve points towards *LEED™* certification.

LEED categories positively affected by the indoor resilient athletic surfacing:

Product Type			PU with Recycled Base Layer
Building Reuse Maintain Interior Nonstructural Elements	**MR 1.2**	Renovation	1
Construction Waste Management	**MR 2**	Renovation	2
Recycled Content	**MR 4** **20% - 2 points**	New/Renovation	2
Regional Materials	**MR 5** **20% - 2 points**	New/Renovation	2

Materials and Resources Rapidly Renewable Materials	**MR 6**	New/Renovation	1
Indoor Environmental Air Quality Low VOC Adhesives/Sealants	**IEQ 4.1**	New/Renovation	1
Low-emitting Materials Paints and Coatings	**IEQ 4.2**	New/Renovation	1

PART 2 - PRODUCTS

2.1 *MANUFACTURERS*

The basis of the design for the indoor resilient multipurpose surfacing is Polyturf Plus Pad and Pour as provided by Fieldturf or equal. Product shall be manufactured by an ISO 9001 company.

2.2 *MATERIALS.*

A.) Flooring System:

Polyturf Plus 12+2 (11 mm total thickness) consists of a recycled resilient sheet force reduction layer integrated with seamless, liquid applied, and self-leveling 2 mm polyurethane topcoat.

A durable protective color coat shall be applied to a thickness of approximately 7 mils. The finished product shall be a seamless surface heterogeneous resilient multipurpose synthetic flooring system. System shall comply with the following criteria. Colors to be selected from manufacturer's standard range.

Properties	**Standards**	**PolyTurf Plus Pad & Pour** **Base Mat + Wear Coat +Top Coat**
Base Mat Properties		
Width		59"
Length		82 lin. ft
Weight		1.2 lb/sq ft
Density	ASTM D297	.67 min (g/cm?)
Tensile Strength	ASTM D412	88 psi (Die Cast C)
Elongation	ASTM D412	48.5% (Die Cast C)
Compression	ASTM F36	@50 psi 87% @100 psi 91% @200 psi 91%
Tear Strength	ASTM D624	30 PPI Die C
Flexibility	ASTM F147	0-1
Compression Set B	ASTM D395	37% (25% deflection 158°F/22hrs)
Compression Set B	ASTM D395	26% (50% deflection 158°F/22hrs)
2mm Wear Coat Properties		
Shore Hardness	Shore A	80
Tensile Strength	ASTM D412	3200 psi
Elongation	ASTM D412	340%
Tear Strength	ASTM D624	360 PLI
Misc Technical		
Fire Classification	ASTM E648	Class 2
Environmental Certification	GreenGuard	GreenGuard Plus Certified
Sports Characteristics		
Overall Thickness		12+2 (14 mm)
Shock Absorption	ASTM F2772	Class 3
Ball Bounce	ASTM F2772	>90%
Vertical Deformation	ASTM F2772	Passed
Surface Finish Effect	ASTM F2772	Passed
Installation with Tarkolay	100% Per ASTM F2170	

1. Game Line Paint:
As approved by the indoor resilient athletic surfacing manufacturer. Colors are to be selected from the manufacturer's standard range.

B. Tarkolay – A high quality low permeance slip sheet vapor retarder designed to separate the installed system from the substrate below. Tarkolay as manufactured by FieldTurf USA, Inc. can be used below, on, or above grade substrates that experience elevated moisture conditions. Moisture tolerances shall not exceed 100% RH per ASTM F2170.

1. Physical properties of the vapor retarder shall conform to the following minimums:

Width	…….	6'6" (2 m)
Length	…….	147'7"' (45 m) approx.
Total Thickness	…….	1.3 mm
Dimensional Stability	PASSED	.01% (EN 1434)
Permeance	Excellent	<0.20 (ASTM E96

PART 3 - EXECUTION

3.1 *EXAMINATION*

A. It is the responsibility of the general contractor/construction manager to ensure that project/site conditions are acceptable for the installation of the indoor resilient athletic flooring.
B. Verify that the area in which the indoor resilient athletic surfacing will be installed is dry and weather tight. Verify that permanent heat, light and ventilation is installed and operable.
C. Verify that all other work that could cause damage, dirt and dust or interrupt the normal pace of the indoor resilient athletic flooring installation is completed or suspended.
D. Verify that there is a stable room temperature of at least 65°F.
E. Verify that there are no foreign materials or objects on the subfloor and that the subfloor is clean and ready for installation.
F. Moisture content less than 100 % RH when tested per ASTM F2170. Follow Fieldturf Installation Recommendations.
G. Do not average the results of the tests. Report all field test results in writing to the General Contractor, Architect, and End User prior to installation.
H. Verify that the concrete subfloor surface pH level is within the 7 - 10 range.
I. Document the results indicating the slab is within manufacturer's tolerances for slab deviation.

3.2 *PREPARATION OF SURFACES*

A. Sand the entire surface of the concrete slab.
B. Sweep the concrete slab so as to remove all dirt and dust. If a sweeping compound is to be used it must be a sweeping compound that does not contain oil or other items that may inhibit the adhesive bond.

C. Slab must be dust free. In the event that dust impairs adhesive bond, priming the slab prior to application of adhesive may be necessary. Follow installation guidelines.

3.3 *INSTALLATION*

A. The installation area shall be closed to all traffic and activity for a period to be set by the indoor resilient athletic surfacing installer. The indoor resilient athletic surfacing installation shall not begin until the installer is familiar with the existing conditions.
B. All necessary precautions should be taken to minimize noise, smell, dust, the use of hazardous materials, and any other items that may inconvenience others.
C. Install the indoor resilient athletic surfacing in strict accordance with the indoor resilient athletic surfacing manufacturer's written instructions.
D. Paint game lines using approved game line paint primer and game line paint in strict accordance with the game line paint manufacturer's instructions.
E. Install appropriate threshold plates or transition strips where necessary.
F. Use only approved adhesive as recommended by the manufacturer.

3.4 *CLEANING*

A. Remove all unused materials, tools, and equipment and dispose of any debris properly. Clean the indoor resilient athletic surfacing in accordance with the manufacturer's instructions.

3.5 *PROTECTION*

If required, protect the indoor resilient athletic surfacing from damage using coverings approved by the manufacturer until acceptance of work by the customer or their authorized representative.

3.6 RELATED STANDARDS AND GUIDELINES

A. ASTM F2170 "Standard Test Method for Determining Relative Humidity In Concrete Floor Slabs Using In-Situ Probes"
B. ASTM F710 "Standard Practice for Preparing Concrete Floors to Receive Resilient Flooring"
C. ACI 302.2R-06 "Guideline for Concrete Slabs that Receive Moisture-Sensitive Flooring Materials"

END OF SECTION

PolyTurf Plus
13+4 Pad and Pour

PolyTurf Plus Pad and Pour 13+4 is a seamless polyurethane sports surface that is designed for durability and spike resistance. This field-constructed system includes a 4 mm layer of polyurethane with a 7 mm recycled rubber base mat and a 6 mm foam pad underneath for comfort and shock absorption.

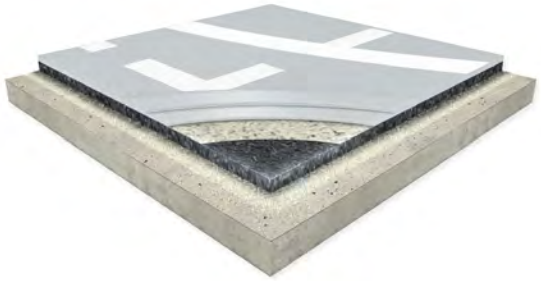

Warranty Protection

- 30-year comprehensive product coverage plus 10-year moisture tolerance coverage. Refer to sample warranty document for complete coverage details.

Environmental Facts and LEED

- For environmental facts and LEED credits, visit: tarkettsportsindoor.com/en/specs-and-data/environmental-fact-sheets and tarkettsportsindoor.com/en/specs-and-data/leed-information.

Maintenance Instructions

- For maintenance instructions, please refer to the PolyTurf Plus Pad and Pour maintenance guide at the following link: tarkettsportsindoor.com/en/specs-and-data/care-and-maintenance.

Installation Methods

- Multi-Poxy Adhesive: installation using Tarkett's solvent-free Multi-Poxy adhesive, which allows moisture tolerance of up to 98% relative humidity per ASTM F2170.
- Beybond 50 Adhesive: installation using Beybond 50 two-part polyurethane adhesive, which allows moisture tolerance of up to 92% relative humidity per ASTM F2170.
- Tarkolay with Multi-Poxy: installation over Tarkolay moisture barrier using Tarkett's solvent-free Multi-Poxy adhesive, which allows moisture tolerance of up to 100% relative humidity per ASTM F2170.

Sports Characteristics

Property	Standard	Value
Surface Finish Effect	ASTM F2772-11	Passed
Force Reduction	ASTM F3189	45.1 %

Technical Characteristics

Property	Standard	Value
Reaction to Fire	ASTM E648	Class 1 (Radiant Panel)
Shore Hardness	—	80 (Shore A)
Tensile Strength	ASTM D412	3200 psi
Elongation	ASTM D412	340 %
Tear Strength	ASTM D624	360 PLI
Thickness	—	17.0 mm (0.669") (4 mm Polyurethane + 7 mm Rubber Base Mat + 6 mm Foam Pad)

Compatible substrates include: properly constructed and prepared concrete, wood, asphalt, and cementitious underlayments. Refer to current installation guidelines, ASTM F710, ACI 302.2R, and other industry standard recommendations for more information. Tarkett Sports reserves the right to modify these specifications without affecting their compliance with standards. Some results may vary in relation to certain flexibilities found within specified testing procedures and manufacturing tolerances.

888.364.6541
tarkettsportsindoor.com

Available Colors for PolyTurf Plus Pad and Pour 13+4

Beige_1200-0133

Black_1200-0091

Blue Blood_1200-0184

Blue Chip_1200-0063

Blue Jay_1200-0125

Blue_1200-0161

Boyden Green_1200-0169

Bright Orange_1200-0065

Bright Red_1200-0044

Butterfield Yellow_1200-0177

Chapel Hill Blue_1200-0073

Classic Tan_1200-0089

Dark Navy Blue_1200-0081

Deep Blue_1200-0111

Desert_1200-0015

Dolphin Grey_1200-0004

Gallant Gold_1200-0123

Garden Cucumber_1200-0155

Garden Green_1200-0062

Gauntlet Grey_1200-0154

Gold_1200-0043

Grass Green_1200-0093

Green_1200-0113

Grey Cloud_1200-0085

Grey Screen_1200-0184

The colors presented here are representations only.
For information on obtaining individual color swatches, contact a local Tarkett Sports representative or call 888-364-6541.

Grey Smoke_1200-0077

Grey_1200-0060

Light Grey_1200-0083

Mid Grey_1200-0180

Midnight Blue_1200-0181

Morning Fog_1200-0066

Ocean Blue_1200-0011

Orange_1200-0094

Pink Panther_1200-0186

Pool Blue_1200-0096

Purdue Gold_1200-0162

Purple_1200-0175

Real Red_1200-0084

Red Theatre_1200-0181

Royal Blue_1200-0037

Sage Green_1200-0006

Smoothie_1200-0068

Southern Blue_1200-0168

Storm Grey_1200-0102

Sundried Tomato_1200-0122

Tarkett Blue_1200-0092

Tropical Green_1200-0135

Vibrant Yellow_1200-0149

White_1200-0900

Yellow_1200-0149

The colors presented here are representations only.
For information on obtaining individual color swatches, contact a local Tarkett Sports representative or call 888-364-6541.

Tarkett SPORTS | THE ULTIMATE SURFACE EXPERIENCE

29/09/20

Game Line Colors

Blue	Yellow	Orange	Aviation-Bright Red	White
Green	Black	Grey		

The colors presented here are representations only.
For information on obtaining individual color swatches, contact a local Tarkett Sports representative or call 888-364-6541.

SECTION 09645
ARCHITECTURAL SPECIFICATIONS FOR INDOOR RESILIENT ATHLETIC SURFACING

PART 1 – GENERAL

1.1 *SECTION INCLUDES*

A. Supply and installation of the indoor resilient multipurpose surfacing
B. Application of the game lines
C. References for the construction and preparation of concrete slabs to receive resilient flooring.

1.2 *SUBMITTALS*

A. Product Data:
Manufacturer's promotional brochures, specifications and installation instructions
B. Samples:
1. Submit for selection and approval three (3) sets of the indoor resilient multipurpose surfacing, manufacturer's brochures, samples or sample boards of all of the available colors, textures and styles.
2. Submit color samples of all the available game line paint colors for selection and approval.
C. Closeout Submittals:
1. Submit three (3) copies of the indoor resilient multipurpose surfacing and manufacturer's maintenance instructions.
2. Submit three (3) copies of the material and installation warranties as specified.

1.3 *QUALITY ASSURANCE*

A. Qualifications:
1. The indoor resilient multipurpose surfacing shall have been actively marketed for a minimum of ten (10) years.
2. The indoor resilient multipurpose surfacing shall be manufactured in an ISO 9001 certified plant.
4. The indoor resilient multipurpose surfacing supplier shall be an established firm, experienced in the field, and appointed as a distributor by the manufacturer of the indoor resilient multipurpose surfacing.
5. The installer of the indoor resilient multipurpose surfacing shall have a minimum of five (5) years of experience in the field installing indoor resilient multipurpose surfacing and have worked on at least five (5) projects of similar size, type and complexity.
B. Certifications:
1. Installer to submit the indoor resilient athletic surfacing manufacturer's certification attesting that they are an approved installer of the indoor resilient multipurpose surfacing.
2. The indoor resilient multipurpose surfacing manufacturer to submit official ISO 9001 certification for the facility in which the indoor resilient multipurpose surfacing is manufactured.

C. Testing:
Tests shall be relative for multi-purpose use with certificates from independent testing resources to be made available upon request. Test results shall be no more than 5 years old and performed according to ASTM standard testing procedures.

B. Certifications:
3. Installer to submit the indoor resilient athletic surfacing manufacturer's or distributor's certification attesting that they are an approved installer of the indoor resilient multipurpose surfacing.

C. Testing:
Tests shall be relative for multi-purpose use with certificates from independent testing resources to be made available upon request. Test results shall be no more than 5 years old and performed according to ASTM F2772 standard testing procedures for force reduction, ball bounce, vertical deformation, and surface finish effect.

1.4 *DELIVERY, STORAGE AND HANDLING*

A. Delivery:
Material shall not be delivered until all related work is in place and finished and/or proper storage facilities and conditions can be provided and guaranteed stable according to Fieldturf' recommendations.

B. Storage:
Store the material in a secure, clean and dry location. Maintain temperature between 55° and 85° Fahrenheit.

1.5 *PROJECT/SITE CONDITIONS*

A. It is the responsibility of the general contractor/construction manager to maintain project/site conditions acceptable for the installation of the indoor resilient multipurpose flooring.

B. The area in which the indoor resilient multipurpose surfacing will be installed shall be dry and weather tight. Permanent heat, light and ventilation shall be installed and operable.

C. All other trades shall have completed their work prior to the installation of the resilient athletic flooring. The general contractor or Construction Manager shall maintain a secure and clean working environment before, during and after the installation. Suspension of other trades' work may be authorized providing their work will not damage the new flooring.

D. Maintain a stable room temperature of at least 65°F for a minimum of one (1) week prior to, during, and thereafter installation.

E. An effective low-permeance vapor barrier is placed directly beneath the concrete subfloor. For "on" or "below grade" installations, it is recommended to provide a permanent vapor barrier resistant to long term hydrostatic pressure/moisture exposure. Protrusions should be sealed to prevent moisture migration into the slab. Moisture should not be allowed to

enter the slab after the completed construction.

F. Concrete subfloor surface pH level within the 7 to 10 range dependent upon installation type.
G. Concrete subfloor should be no greater than 1/8" within a 10 ft diameter. This tolerance can be measured in accordance with ASTM E1155. A specified (F_F) of 50 and an (F_L) of 30 should reach this degree of floor flatness and floor level. There is no numerical correlation between F numbers and the deviation from the straight edge, however the above specified numbers should achieve a flat floor with minimal deviation in the slab. Reference ACI 117 and ACI 302.1R. The general contractor should provide a certificate of compliance with the above recommendations.
H. Concrete subfloor must be clean and free of all foreign materials or objects including, but not limited to, curing compounds and sealers.
I. Fill cracks, grooves, voids, depressions, and other minor imperfections with Ardex (or equal) cement-based patching/leveling compounds. Follow the manufacturer's directions. Moveable joints must be treated utilizing specific transitioning joint devices depending upon the architect's recommendations. Follow current ASTM F710 guidelines for the preparation of concrete slabs to receive resilient flooring.
J. Refer to ACI 302.2R "Guidelines for Concrete Slabs that Receive Moisture-Sensitive Flooring Materials" for concrete design and construction.
K. Concrete slab shall be fortified with continual steel reinforcement. Fiber reinforcement alone shall not be considered adequate fortification.

1.6 *WARRANTY*

A. Materials:
The indoor resilient athletic surfacing shall be covered by the manufacturer against product defects for 30 years and moisture warranty for 10 years. The manufacturer of the indoor resilient multipurpose surfacing must provide this warranty upon request.
B. Installation:
The installation of the indoor resilient multipurpose surfacing shall be covered against poor workmanship and faulty installation by a two (2) year written, limited warranty provided by the contractor performing/overseeing the installation.

1.7 *ADDITIONAL MATERIALS*

Furnish to the owner additional materials containing a total of at least 1% of each different color or design of the indoor resilient athletic surfacing used on the project.

1.8 *LEED™ CERTIFICATION*

The indoor resilient athletic surfacing should be able to help this facility to achieve points towards *LEED™* certification.

LEED categories positively affected by the indoor resilient athletic surfacing:

Product Type			PU with Recycled Base Layer
Building Reuse Maintain Interior Nonstructural Elements	MR 1.2	Renovation	1
Construction Waste Management	MR 2	Renovation	2
Recycled Content	MR 4 20% - 2 points	New/Renovation	2
Regional Materials	MR 5 20% - 2 points	New/Renovation	2
Materials and Resources Rapidly Renewable Materials	MR 6	New/Renovation	1
Indoor Environmental Air Quality Low VOC Adhesives/Sealants	IEQ 4.1	New/Renovation	1
Low-emitting Materials Paints and Coatings	IEQ 4.2	New/Renovation	1

PART 2 - PRODUCTS

2.1 *MANUFACTURERS*

The basis of the design for the indoor resilient multipurpose surfacing is Polyturf Plus Pad and Pour as provided by Fieldturf or equal. Product shall be manufactured by an ISO 9001 company.

2.2 *MATERIALS.*

A.) Flooring System:

Polyturf Plus 4+2 (6mm total thickness) consists of a recycled resilient sheet force reduction layer integrated with seamless, liquid applied, and self-leveling 2 mm polyurethane topcoat.

A durable protective color coat shall be applied to a thickness of approximately 7 mils. The finished product shall be a seamless surface heterogeneous resilient multipurpose synthetic flooring system. System shall comply with the following criteria. Colors to be selected from manufacturer's standard range.

Properties	Standards	PolyTurf Plus Pad & Pour Base Mat + Wear Coat +Top Coat
Base Mat Properties		
Width		59″
Length		82 lin. ft
Weight		1.2 lb/sq ft
Density	ASTM D297	.67 min (g/cm?)
Tensile Strength	ASTM D412	88 psi (Die Cast C)
Elongation	ASTM D412	48.5% (Die Cast C)
Compression	ASTM F36	@50 psi 87% @100 psi 91% @200 psi 91%
Tear Strength	ASTM D624	30 PPI Die C
Flexibility	ASTM F147	0-1
Compression Set B	ASTM D395	37% (25% deflection 158°F/22hrs)
Compression Set B	ASTM D395	26% (50% deflection 158°F/22hrs)
2mm Wear Coat Properties		
Shore Hardness	Shore A	80
Tensile Strength	ASTM D412	3200psi
Elongation	ASTM D412	340%
Tear Strength	ASTM D624	360PLI
Misc Techical		
Fire Classification	ASTM E648	Class 1
Environmental Certification	GreenGuard	GreenGuard Plus Certified
Sports Characteristics		
Overall Thickness		4+2 (6mm)
Shock Absorption	ASTM F2772	Class 1
Ball Bounce	ASTM F2772	>90%
Vertical Deformation	ASTM F2772	Passed
Surface Finish Effect	ASTM F2772	Passed
Installation with Multi-Poxy	92% Per ASTM F2170	

Game Line Paint:

As approved by the indoor resilient athletic surfacing manufacturer. Colors are to be selected from the manufacturer's standard range.

PART 3 - EXECUTION

3.1 *EXAMINATION*

A. It is the responsibility of the general contractor/construction manager to ensure that project/site conditions are acceptable for the installation of the indoor resilient athletic flooring.

B. Verify that the area in which the indoor resilient athletic surfacing will be installed is dry and weather tight. Verify that permanent heat, light and ventilation is installed and operable.

C. Verify that all other work that could cause damage, dirt and dust or interrupt the normal pace of the indoor resilient athletic flooring installation is completed or suspended.

D. Verify that there is a stable room temperature of at least 65°F.

E. Verify that there are no foreign materials or objects on the subfloor and that the subfloor is clean and ready for installation.

F. Moisture content less than 98 % RH when tested per ASTM F2170. Follow Fieldturf Installation Recommendations.
G. If both tests are performed, use the highest value. Do not average the results of the tests. Report all field test results in writing to the General Contractor, Architect, and End User prior to installation.
H. Verify that the concrete subfloor surface pH level is within the 7 - 10 range.
I. Document the results indicating the slab is within manufacturer's tolerances for slab deviation.

3.2 *PREPARATION OF SURFACES*

A. Sand the entire surface of the concrete slab.
B. Sweep the concrete slab so as to remove all dirt and dust. If a sweeping compound is to be used it must be a sweeping compound that does not contain oil or other items that may inhibit the adhesive bond.
C. Slab must be dust free. In the event that dust impairs adhesive bond, priming the slab prior to application of adhesive may be necessary. Follow installation guidelines.

3.3 *INSTALLATION*

A. The installation area shall be closed to all traffic and activity for a period to be set by the indoor resilient athletic surfacing installer. The indoor resilient athletic surfacing installation shall not begin until the installer is familiar with the existing conditions.
B. All necessary precautions should be taken to minimize noise, smell, dust, the use of hazardous materials, and any other items that may inconvenience others.
C. Install the indoor resilient athletic surfacing in strict accordance with the indoor resilient athletic surfacing manufacturer's written instructions.
D. Paint game lines using approved game line paint primer and game line paint in strict accordance with the game line paint manufacturer's instructions.
E. Install appropriate threshold plates or transition strips where necessary.
F. Use only approved adhesive as recommended by the manufacturer.

3.4 *CLEANING*

A. Remove all unused materials, tools, and equipment and dispose of any debris properly. Clean the indoor resilient athletic surfacing in accordance with the manufacturer's instructions.

3.5 *PROTECTION*

If required, protect the indoor resilient athletic surfacing from damage using coverings approved by the manufacturer until acceptance of work by the customer or their authorized representative.

3.6 RELATED STANDARDS AND GUIDELINES

A. ASTM F2170 "Standard Test Method for Determining Relative Humidity In Concrete Floor Slabs Using In-Situ Probes"
B. ASTM F710 "Standard Practice for Preparing Concrete Floors to Receive

Resilient Flooring"

C. ACI 302.2R-06 "Guideline for Concrete Slabs that Receive Moisture-Sensitive Flooring Materials"

END OF SECTION

PART 1 – GENERAL

1.1 *SECTION INCLUDES*

A. Supply and installation of the indoor resilient multipurpose surfacing
B. Application of the game lines
C. References for the construction and preparation of concrete slabs to receive resilient flooring.

1.2 *SUBMITTALS*

A. Product Data:
Manufacturer's promotional brochures, specifications and installation instructions
B. Samples:
1. Submit for selection and approval three (3) sets of the indoor resilient multipurpose surfacing, manufacturer's brochures, samples or sample boards of all of the available colors, textures and styles.
2. Submit color samples of all the available game line paint colors for selection and approval.
C. Closeout Submittals:
1. Submit three (3) copies of the indoor resilient multipurpose surfacing and manufacturer's maintenance instructions.
2. Submit three (3) copies of the material and installation warranties as specified.

1.3 *QUALITY ASSURANCE*

A. Qualifications:
1. The indoor resilient multipurpose surfacing shall have been actively marketed for a minimum of ten (10) years.
2. The indoor resilient multipurpose surfacing shall be manufactured in an ISO 9001 certified plant.
4. The indoor resilient multipurpose surfacing supplier shall be an established firm, experienced in the field, and appointed as a distributor by the manufacturer of the indoor resilient multipurpose surfacing.
5. The installer of the indoor resilient multipurpose surfacing shall have a minimum of five (5) years of experience in the field installing indoor resilient multipurpose surfacing and have worked on at least five (5) projects of similar size, type and complexity.
B. Certifications:
1. Installer to submit the indoor resilient athletic surfacing manufacturer's certification attesting that they are an approved installer of the indoor resilient multipurpose surfacing.
2. The indoor resilient multipurpose surfacing manufacturer to submit official ISO 9001 certification for the facility in which the indoor resilient multipurpose surfacing is manufactured.

C. Testing:
Tests shall be relative for multi-purpose use with certificates from independent testing resources to be made available upon request. Test

results shall be no more than 5 years old and performed according to ASTM standard testing procedures.

B. Certifications:
   3. Installer to submit the indoor resilient athletic surfacing manufacturer's or distributor's certification attesting that they are an approved installer of the indoor resilient multipurpose surfacing.

C. Testing:
   Tests shall be relative for multi-purpose use with certificates from independent testing resources to be made available upon request. Test results shall be no more than 5 years old and performed according to ASTM F2772 standard testing procedures for force reduction, ball bounce, vertical deformation, and surface finish effect.

1.4 *DELIVERY, STORAGE AND HANDLING*

A. Delivery:
   Material shall not be delivered until all related work is in place and finished and/or proper storage facilities and conditions can be provided and guaranteed stable according to Fieldturf' recommendations.
B. Storage:
   Store the material in a secure, clean and dry location. Maintain temperature between 55° and 85° Fahrenheit.

1.5 *PROJECT/SITE CONDITIONS*

A. It is the responsibility of the general contractor/construction manager to maintain project/site conditions acceptable for the installation of the indoor resilient multipurpose flooring.
B. The area in which the indoor resilient multipurpose surfacing will be installed shall be dry and weather tight. Permanent heat, light and ventilation shall be installed and operable.
C. All other trades shall have completed their work prior to the installation of the resilient athletic flooring. The general contractor or Construction Manager shall maintain a secure and clean working environment before, during and after the installation. Suspension of other trades' work may be authorized providing their work will not damage the new flooring.
D. Maintain a stable room temperature of at least 65°F for a minimum of one (1) week prior to, during, and thereafter installation.
E. An effective low-permeance vapor barrier is placed directly beneath the concrete subfloor. For "on" or "below grade" installations, it is recommended to provide a permanent vapor barrier resistant to long term hydrostatic pressure/moisture exposure. Protrusions should be sealed to prevent moisture migration into the slab. Moisture should not be allowed to enter the slab after the completed construction.
F. Concrete subfloor surface pH level within the 7 to 10 range dependent upon installation type.
G. Concrete subfloor should be no greater than 1/8" within a 10 ft diameter. This tolerance can be measured in accordance with ASTM E1155.
   A specified (F_F) of 50 and an (F_L) of 30 should reach this degree of floor

flatness and floor level. There is no numerical correlation between F numbers and the deviation from the straight edge, however the above specified numbers should achieve a flat floor with minimal deviation in the slab. Reference ACI 117 and ACI 302.1R. The general contractor should provide a certificate of compliance with the above recommendations.

H. Concrete subfloor must be clean and free of all foreign materials or objects including, but not limited to, curing compounds and sealers.

I. Fill cracks, grooves, voids, depressions, and other minor imperfections with Ardex (or equal) cement-based patching/leveling compounds. Follow the manufacturer's directions. Moveable joints must be treated utilizing specific transitioning joint devices depending upon the architect's recommendations. Follow current ASTM F710 guidelines for the preparation of concrete slabs to receive resilient flooring.

J. Refer to ACI 302.2R "Guidelines for Concrete Slabs that Receive Moisture-Sensitive Flooring Materials" for concrete design and construction.

K. Concrete slab shall be fortified with continual steel reinforcement. Fiber reinforcement alone shall not be considered adequate fortification.

1.6 *WARRANTY*

A. Materials:
The indoor resilient athletic surfacing shall be covered by the manufacturer against product defects for 30 years and moisture warranty for 10 years. The manufacturer of the indoor resilient multipurpose surfacing must provide this warranty upon request.

B. Installation:
The installation of the indoor resilient multipurpose surfacing shall be covered against poor workmanship and faulty installation by a two (2) year written, limited warranty provided by the contractor performing/overseeing the installation.

1.7 *ADDITIONAL MATERIALS*

Furnish to the owner additional materials containing a total of at least 1% of each different color or design of the indoor resilient athletic surfacing used on the project.

1.8 *LEED™ CERTIFICATION*

The indoor resilient athletic surfacing should be able to help this facility to achieve points towards *LEED™* certification.

LEED categories positively affected by the indoor resilient athletic surfacing:

Product Type			PU with Recycled Base Layer
Building Reuse Maintain Interior Nonstructural Elements	**MR 1.2**	Renovation	1
Construction Waste Management	**MR 2**	Renovation	2
Recycled Content	**MR 4** **20% - 2 points**	New/Renovation	2
Regional Materials	**MR 5** **20% - 2 points**	New/Renovation	2

Materials and Resources Rapidly Renewable Materials	**MR 6**	New/Renovation	1
Indoor Environmental Air Quality Low VOC Adhesives/Sealants	**IEQ 4.1**	New/Renovation	1
Low-emitting Materials Paints and Coatings	**IEQ 4.2**	New/Renovation	1

PART 2 - PRODUCTS

2.1 *MANUFACTURERS*

The basis of the design for the indoor resilient multipurpose surfacing is Polyturf Plus Pad and Pour as provided by Fieldturf or equal. Product shall be manufactured by an ISO 9001 company.

2.2 *MATERIALS.*

A.) Flooring System:

Polyturf Plus 4+2 (6 mm total thickness) consists of a recycled resilient sheet force reduction layer integrated with seamless, liquid applied, and self-leveling 2 mm polyurethane topcoat.

A durable protective color coat shall be applied to a thickness of approximately 7 mils. The finished product shall be a seamless surface heterogeneous resilient multipurpose synthetic flooring system. System shall comply with the following criteria. Colors to be selected from manufacturer's standard range.

Properties	Standards	PolyTurf Plus Pad & Pour Base Mat + Wear Coat +Top Coat
Base Mat Properties		
Width		59"
Length		82 lin. ft
Weight		1.2 lb/sq ft
Density	ASTM D297	.67 min (g/cm?)
Tensile Strength	ASTM D412	88 psi (Die Cast C)
Elongation	ASTM D412	48.5% (Die Cast C)
Compression	ASTM F36	@50 psi 87% @100 psi 91% @200 psi 91%
Tear Strength	ASTM D624	30 PPI Die C
Flexibility	ASTM F147	0-1
Compression Set B	ASTM D395	37% (25% deflection 158°F/22hrs)
Compression Set B	ASTM D395	26% (50% deflection 158°F/22hrs)
2mm Wear Coat Properties		
Shore Hardness	Shore A	80
Tensile Strength	ASTM D412	3200 psi
Elongation	ASTM D412	340%
Tear Strength	ASTM D624	360 PLI
Misc Technical		
Fire Classification	ASTM E648	Class 1
Environmental Certification	GreenGuard	GreenGuard Plus Certified
Sports Characteristics		
Overall Thickness		4+2 (6 mm)
Shock Absorption	ASTM F2772	Class 1
Ball Bounce	ASTM F2772	>90%
Vertical Deformation	ASTM F2772	Passed
Surface Finish Effect	ASTM F2772	Passed
Installation with Multi-Poxy	92% Per ASTM F2170	

1. Game Line Paint: As approved by the indoor resilient athletic surfacing manufacturer. Colors are to be selected from the manufacturer's standard range.

B. Tarkolay – A high quality low permeance slip sheet vapor retarder designed to separate the installed system from the substrate below. Tarkolay as manufactured by FieldTurf USA, Inc. can be used below, on, or above grade substrates that experience elevated moisture conditions. Moisture tolerances shall not exceed 100% RH per ASTM F2170.

1. Physical properties of the vapor retarder shall conform to the following minimums:

Width	…….	6'6" (2 m)
Length	…….	147'7"' (45 m) approx.
Total Thickness	…….	1.3 mm
Dimensional Stability	PASSED	.01% (EN 1434)
Permeance	Excellent	<0.20 (ASTM E96

PART 3 - EXECUTION

3.1 *EXAMINATION*

A. It is the responsibility of the general contractor/construction manager to ensure that project/site conditions are acceptable for the installation of the indoor resilient athletic flooring.
B. Verify that the area in which the indoor resilient athletic surfacing will be installed is dry and weather tight. Verify that permanent heat, light and ventilation is installed and operable.
C. Verify that all other work that could cause damage, dirt and dust or interrupt the normal pace of the indoor resilient athletic flooring installation is completed or suspended.
D. Verify that there is a stable room temperature of at least 65°F.
E. Verify that there are no foreign materials or objects on the subfloor and that the subfloor is clean and ready for installation.
F. Moisture content less than 98 % RH when tested per ASTM F2170. Follow Fieldturf Installation Recommendations.
G. Do not average the results of the tests. Report all field test results in writing to the General Contractor, Architect, and End User prior to installation.
H. Verify that the concrete subfloor surface pH level is within the 7 - 10 range.
I. Document the results indicating the slab is within manufacturer's tolerances for slab deviation.

3.2 *PREPARATION OF SURFACES*

A. Sand the entire surface of the concrete slab.
B. Sweep the concrete slab so as to remove all dirt and dust. If a sweeping compound is to be used it must be a sweeping compound that does not contain oil or other items that may inhibit the adhesive bond.
C. Slab must be dust free. In the event that dust impairs adhesive bond, priming the slab prior to application of adhesive may be necessary. Follow installation guidelines.

3.3 *INSTALLATION*

A. The installation area shall be closed to all traffic and activity for a period to be set by the indoor resilient athletic surfacing installer. The indoor resilient athletic surfacing installation shall not begin until the installer is familiar with the existing conditions.
B. All necessary precautions should be taken to minimize noise, smell, dust, the use of hazardous materials, and any other items that may inconvenience others.
C. Install the indoor resilient athletic surfacing in strict accordance with the indoor resilient athletic surfacing manufacturer's written instructions.
D. Paint game lines using approved game line paint primer and game line paint in strict accordance with the game line paint manufacturer's instructions.
E. Install appropriate threshold plates or transition strips where necessary.
F. Use only approved adhesive as recommended by the manufacturer.

3.4 *CLEANING*

A. Remove all unused materials, tools, and equipment and dispose of any debris properly. Clean the indoor resilient athletic surfacing in accordance with the manufacturer's instructions.

3.5 *PROTECTION*

If required, protect the indoor resilient athletic surfacing from damage using coverings approved by the manufacturer until acceptance of work by the customer or their authorized representative.

3.6 RELATED STANDARDS AND GUIDELINES

A. ASTM F2170 "Standard Test Method for Determining Relative Humidity In Concrete Floor Slabs Using In-Situ Probes"
B. ASTM F710 "Standard Practice for Preparing Concrete Floors to Receive Resilient Flooring"
C. ACI 302.2R-06 "Guideline for Concrete Slabs that Receive Moisture-Sensitive Flooring Materials"

END OF SECTION

SECTION 09645
ARCHITECTURAL SPECIFICATIONS FOR INDOOR RESILIENT ATHLETIC SURFACING

PART 1 – GENERAL

1.1 *SECTION INCLUDES*

A. Supply and installation of the indoor resilient multipurpose surfacing
B. Application of the game lines
C. References for the construction and preparation of concrete slabs to receive resilient flooring.

1.2 *SUBMITTALS*

A. Product Data:
Manufacturer's promotional brochures, specifications and installation instructions
B. Samples:
1. Submit for selection and approval three (3) sets of the indoor resilient multipurpose surfacing, manufacturer's brochures, samples or sample boards of all of the available colors, textures and styles.
2. Submit color samples of all the available game line paint colors for selection and approval.
C. Closeout Submittals:
1. Submit three (3) copies of the indoor resilient multipurpose surfacing and manufacturer's maintenance instructions.
2. Submit three (3) copies of the material and installation warranties as specified.

1.3 *QUALITY ASSURANCE*

A. Qualifications:
1. The indoor resilient multipurpose surfacing shall have been actively marketed for a minimum of ten (10) years.
2. The indoor resilient multipurpose surfacing shall be manufactured in an ISO 9001 certified plant.
4. The indoor resilient multipurpose surfacing supplier shall be an established firm, experienced in the field, and appointed as a distributor by the manufacturer of the indoor resilient multipurpose surfacing.
5. The installer of the indoor resilient multipurpose surfacing shall have a minimum of five (5) years of experience in the field installing indoor resilient multipurpose surfacing and have worked on at least five (5) projects of similar size, type and complexity.
B. Certifications:
1. Installer to submit the indoor resilient athletic surfacing manufacturer's certification attesting that they are an approved installer of the indoor resilient multipurpose surfacing.
2. The indoor resilient multipurpose surfacing manufacturer to submit official ISO 9001 certification for the facility in which the indoor resilient multipurpose surfacing is manufactured.

C. Testing:
Tests shall be relative for multi-purpose use with certificates from independent testing resources to be made available upon request. Test results shall be no more than 5 years old and performed according to ASTM standard testing procedures.

B. Certifications:
3. Installer to submit the indoor resilient athletic surfacing manufacturer's or distributor's certification attesting that they are an approved installer of the indoor resilient multipurpose surfacing.

C. Testing:
Tests shall be relative for multi-purpose use with certificates from independent testing resources to be made available upon request. Test results shall be no more than 5 years old and performed according to ASTM F2772 standard testing procedures for force reduction, ball bounce, vertical deformation, and surface finish effect.

1.4 *DELIVERY, STORAGE AND HANDLING*

A. Delivery:
Material shall not be delivered until all related work is in place and finished and/or proper storage facilities and conditions can be provided and guaranteed stable according to Fieldturf' recommendations.

B. Storage:
Store the material in a secure, clean and dry location. Maintain temperature between 55° and 85° Fahrenheit.

1.5 *PROJECT/SITE CONDITIONS*

A. It is the responsibility of the general contractor/construction manager to maintain project/site conditions acceptable for the installation of the indoor resilient multipurpose flooring.

B. The area in which the indoor resilient multipurpose surfacing will be installed shall be dry and weather tight. Permanent heat, light and ventilation shall be installed and operable.

C. All other trades shall have completed their work prior to the installation of the resilient athletic flooring. The general contractor or Construction Manager shall maintain a secure and clean working environment before, during and after the installation. Suspension of other trades' work may be authorized providing their work will not damage the new flooring.

D. Maintain a stable room temperature of at least 65°F for a minimum of one (1) week prior to, during, and thereafter installation.

E. An effective low-permeance vapor barrier is placed directly beneath the concrete subfloor. For "on" or "below grade" installations, it is recommended to provide a permanent vapor barrier resistant to long term hydrostatic pressure/moisture exposure. Protrusions should be sealed to prevent moisture migration into the slab. Moisture should not be allowed to

enter the slab after the completed construction.

F. Concrete subfloor surface pH level within the 7 to 10 range dependent upon installation type.
G. Concrete subfloor should be no greater than 1/8" within a 10 ft diameter. This tolerance can be measured in accordance with ASTM E1155. A specified (F_F) of 50 and an (F_L) of 30 should reach this degree of floor flatness and floor level. There is no numerical correlation between F numbers and the deviation from the straight edge, however the above specified numbers should achieve a flat floor with minimal deviation in the slab. Reference ACI 117 and ACI 302.1R. The general contractor should provide a certificate of compliance with the above recommendations.
H. Concrete subfloor must be clean and free of all foreign materials or objects including, but not limited to, curing compounds and sealers.
I. Fill cracks, grooves, voids, depressions, and other minor imperfections with Ardex (or equal) cement-based patching/leveling compounds. Follow the manufacturer's directions. Moveable joints must be treated utilizing specific transitioning joint devices depending upon the architect's recommendations. Follow current ASTM F710 guidelines for the preparation of concrete slabs to receive resilient flooring.
J. Refer to ACI 302.2R "Guidelines for Concrete Slabs that Receive Moisture-Sensitive Flooring Materials" for concrete design and construction.
K. Concrete slab shall be fortified with continual steel reinforcement. Fiber reinforcement alone shall not be considered adequate fortification.

1.6 *WARRANTY*

A. Materials:
The indoor resilient athletic surfacing shall be covered by the manufacturer against product defects for 30 years and moisture warranty for 10 years. The manufacturer of the indoor resilient multipurpose surfacing must provide this warranty upon request.
B. Installation:
The installation of the indoor resilient multipurpose surfacing shall be covered against poor workmanship and faulty installation by a two (2) year written, limited warranty provided by the contractor performing/overseeing the installation.

1.7 *ADDITIONAL MATERIALS*

Furnish to the owner additional materials containing a total of at least 1% of each different color or design of the indoor resilient athletic surfacing used on the project.

1.8 *LEED™ CERTIFICATION*

The indoor resilient athletic surfacing should be able to help this facility to achieve points towards *LEED™* certification.

LEED categories positively affected by the indoor resilient athletic surfacing:

Product Type			PU with Recycled Base Layer
Building Reuse Maintain Interior Nonstructural Elements	MR 1.2	Renovation	1
Construction Waste Management	MR 2	Renovation	2
Recycled Content	MR 4 20% - 2 points	New/Renovation	2
Regional Materials	MR 5 20% - 2 points	New/Renovation	2
Materials and Resources Rapidly Renewable Materials	MR 6	New/Renovation	1
Indoor Environmental Air Quality Low VOC Adhesives/Sealants	IEQ 4.1	New/Renovation	1
Low-emitting Materials Paints and Coatings	IEQ 4.2	New/Renovation	1

PART 2 - PRODUCTS

2.1 *MANUFACTURERS*

The basis of the design for the indoor resilient multipurpose surfacing is Polyturf Plus Pad and Pour as provided by Fieldturf or equal. Product shall be manufactured by an ISO 9001 company.

2.2 *MATERIALS.*

A.) Flooring System:

Polyturf Plus 7+2 (9mm total thickness) consists of a recycled resilient sheet force reduction layer integrated with seamless, liquid applied, and self-leveling 2 mm polyurethane topcoat.

A durable protective color coat shall be applied to a thickness of approximately 7 mils. The finished product shall be a seamless surface heterogeneous resilient multipurpose synthetic flooring system. System shall comply with the following criteria. Colors to be selected from manufacturer's standard range.

Properties	Standards	PolyTurf Plus Pad & Pour Base Mat + Wear Coat +Top Coat
Base Mat Properties		
Width		59″
Length		82 lin. ft
Weight		1.2 lb/sq ft
Density	ASTM D297	.67 min (g/cm?)
Tensile Strength	ASTM D412	88 psi (Die Cast C)
Elongation	ASTM D412	48.5% (Die Cast C)
Compression	ASTM F36	@50 psi 87% @100 psi 91% @200 psi 91%
Tear Strength	ASTM D624	30 PPI Die C
Flexibility	ASTM F147	0-1
Compression Set B	ASTM D395	37% (25% deflection 158°F/22hrs)
Compression Set B	ASTM D395	26% (50% deflection 158°F/22hrs)
2mm Wear Coat Properties		
Shore Hardness	Shore A	80
Tensile Strength	ASTM D412	3200 psi
Elongation	ASTM D412	340%
Tear Strength	ASTM D624	360 PLI
Misc Techical		
Fire Classification	ASTM E648	Class 1
Environmental Certification	GreenGuard	GreenGuard Plus Certified
Sports Characteristics		
Overall Thickness		7+2 (9mm)
Shock Absorption	ASTM F2772	Class 2
Ball Bounce	ASTM F2772	>90%
Vertical Deformation	ASTM F2772	Passed
Surface Finish Effect	ASTM F2772	Passed
Installation with Multi-Poxy	92% Per ASTM F2170	

.

Game Line Paint:

As approved by the indoor resilient athletic surfacing manufacturer. Colors are to be selected from the manufacturer's standard range.

PART 3 - EXECUTION

3.1 *EXAMINATION*

A. It is the responsibility of the general contractor/construction manager to ensure that project/site conditions are acceptable for the installation of the indoor resilient athletic flooring.

B. Verify that the area in which the indoor resilient athletic surfacing will be installed is dry and weather tight. Verify that permanent heat, light and ventilation is installed and operable.

C. Verify that all other work that could cause damage, dirt and dust or interrupt the normal pace of the indoor resilient athletic flooring installation is completed or suspended.

D. Verify that there is a stable room temperature of at least 65°F.

E. Verify that there are no foreign materials or objects on the subfloor and that the subfloor is clean and ready for installation.

F. Moisture content less than 98 % RH when tested per ASTM F2170. Follow Fieldturf Installation Recommendations.
G. If both tests are performed, use the highest value. Do not average the results of the tests. Report all field test results in writing to the General Contractor, Architect, and End User prior to installation.
H. Verify that the concrete subfloor surface pH level is within the 7 - 10 range.
I. Document the results indicating the slab is within manufacturer's tolerances for slab deviation.

3.2 *PREPARATION OF SURFACES*

A. Sand the entire surface of the concrete slab.
B. Sweep the concrete slab so as to remove all dirt and dust. If a sweeping compound is to be used it must be a sweeping compound that does not contain oil or other items that may inhibit the adhesive bond.
C. Slab must be dust free. In the event that dust impairs adhesive bond, priming the slab prior to application of adhesive may be necessary. Follow installation guidelines.

3.3 *INSTALLATION*

A. The installation area shall be closed to all traffic and activity for a period to be set by the indoor resilient athletic surfacing installer. The indoor resilient athletic surfacing installation shall not begin until the installer is familiar with the existing conditions.
B. All necessary precautions should be taken to minimize noise, smell, dust, the use of hazardous materials, and any other items that may inconvenience others.
C. Install the indoor resilient athletic surfacing in strict accordance with the indoor resilient athletic surfacing manufacturer's written instructions.
D. Paint game lines using approved game line paint primer and game line paint in strict accordance with the game line paint manufacturer's instructions.
E. Install appropriate threshold plates or transition strips where necessary.
F. Use only approved adhesive as recommended by the manufacturer.

3.4 *CLEANING*

A. Remove all unused materials, tools, and equipment and dispose of any debris properly. Clean the indoor resilient athletic surfacing in accordance with the manufacturer's instructions.

3.5 *PROTECTION*

If required, protect the indoor resilient athletic surfacing from damage using coverings approved by the manufacturer until acceptance of work by the customer or their authorized representative.

3.6 RELATED STANDARDS AND GUIDELINES

A. ASTM F2170 "Standard Test Method for Determining Relative Humidity In Concrete Floor Slabs Using In-Situ Probes"
B. ASTM F710 "Standard Practice for Preparing Concrete Floors to Receive

Resilient Flooring"

C. ACI 302.2R-06 "Guideline for Concrete Slabs that Receive Moisture-Sensitive Flooring Materials"

END OF SECTION

PART 1 – GENERAL

1.1 *SECTION INCLUDES*

A. Supply and installation of the indoor resilient multipurpose surfacing
B. Application of the game lines
C. References for the construction and preparation of concrete slabs to receive resilient flooring.

1.2 *SUBMITTALS*

A. Product Data:
Manufacturer's promotional brochures, specifications and installation instructions
B. Samples:
1. Submit for selection and approval three (3) sets of the indoor resilient multipurpose surfacing, manufacturer's brochures, samples or sample boards of all of the available colors, textures and styles.
2. Submit color samples of all the available game line paint colors for selection and approval.
C. Closeout Submittals:
1. Submit three (3) copies of the indoor resilient multipurpose surfacing and manufacturer's maintenance instructions.
2. Submit three (3) copies of the material and installation warranties as specified.

1.3 *QUALITY ASSURANCE*

A. Qualifications:
1. The indoor resilient multipurpose surfacing shall have been actively marketed for a minimum of ten (10) years.
2. The indoor resilient multipurpose surfacing shall be manufactured in an ISO 9001 certified plant.
4. The indoor resilient multipurpose surfacing supplier shall be an established firm, experienced in the field, and appointed as a distributor by the manufacturer of the indoor resilient multipurpose surfacing.
5. The installer of the indoor resilient multipurpose surfacing shall have a minimum of five (5) years of experience in the field installing indoor resilient multipurpose surfacing and have worked on at least five (5) projects of similar size, type and complexity.
B. Certifications:
1. Installer to submit the indoor resilient athletic surfacing manufacturer's certification attesting that they are an approved installer of the indoor resilient multipurpose surfacing.
2. The indoor resilient multipurpose surfacing manufacturer to submit official ISO 9001 certification for the facility in which the indoor resilient multipurpose surfacing is manufactured.

C. Testing:
Tests shall be relative for multi-purpose use with certificates from independent testing resources to be made available upon request. Test

results shall be no more than 5 years old and performed according to ASTM standard testing procedures.

B. Certifications:
   3. Installer to submit the indoor resilient athletic surfacing manufacturer's or distributor's certification attesting that they are an approved installer of the indoor resilient multipurpose surfacing.

C. Testing:
   Tests shall be relative for multi-purpose use with certificates from independent testing resources to be made available upon request. Test results shall be no more than 5 years old and performed according to ASTM F2772 standard testing procedures for force reduction, ball bounce, vertical deformation, and surface finish effect.

1.4 *DELIVERY, STORAGE AND HANDLING*

A. Delivery:
   Material shall not be delivered until all related work is in place and finished and/or proper storage facilities and conditions can be provided and guaranteed stable according to Fieldturf' recommendations.
B. Storage:
   Store the material in a secure, clean and dry location. Maintain temperature between 55° and 85° Fahrenheit.

1.5 *PROJECT/SITE CONDITIONS*

A. It is the responsibility of the general contractor/construction manager to maintain project/site conditions acceptable for the installation of the indoor resilient multipurpose flooring.
B. The area in which the indoor resilient multipurpose surfacing will be installed shall be dry and weather tight. Permanent heat, light and ventilation shall be installed and operable.
C. All other trades shall have completed their work prior to the installation of the resilient athletic flooring. The general contractor or Construction Manager shall maintain a secure and clean working environment before, during and after the installation. Suspension of other trades' work may be authorized providing their work will not damage the new flooring.
D. Maintain a stable room temperature of at least 65°F for a minimum of one (1) week prior to, during, and thereafter installation.
E. An effective low-permeance vapor barrier is placed directly beneath the concrete subfloor. For "on" or "below grade" installations, it is recommended to provide a permanent vapor barrier resistant to long term hydrostatic pressure/moisture exposure. Protrusions should be sealed to prevent moisture migration into the slab. Moisture should not be allowed to enter the slab after the completed construction.
F. Concrete subfloor surface pH level within the 7 to 10 range dependent upon installation type.
G. Concrete subfloor should be no greater than 1/8" within a 10 ft diameter. This tolerance can be measured in accordance with ASTM E1155.
   A specified (F_F) of 50 and an (F_L) of 30 should reach this degree of floor

flatness and floor level. There is no numerical correlation between F numbers and the deviation from the straight edge, however the above specified numbers should achieve a flat floor with minimal deviation in the slab. Reference ACI 117 and ACI 302.1R. The general contractor should provide a certificate of compliance with the above recommendations.

H. Concrete subfloor must be clean and free of all foreign materials or objects including, but not limited to, curing compounds and sealers.

I. Fill cracks, grooves, voids, depressions, and other minor imperfections with Ardex (or equal) cement-based patching/leveling compounds. Follow the manufacturer's directions. Moveable joints must be treated utilizing specific transitioning joint devices depending upon the architect's recommendations. Follow current ASTM F710 guidelines for the preparation of concrete slabs to receive resilient flooring.

J. Refer to ACI 302.2R "Guidelines for Concrete Slabs that Receive Moisture-Sensitive Flooring Materials" for concrete design and construction.

K. Concrete slab shall be fortified with continual steel reinforcement. Fiber reinforcement alone shall not be considered adequate fortification.

1.6 *WARRANTY*

A. Materials:
The indoor resilient athletic surfacing shall be covered by the manufacturer against product defects for 30 years and moisture warranty for 10 years. The manufacturer of the indoor resilient multipurpose surfacing must provide this warranty upon request.

B. Installation:
The installation of the indoor resilient multipurpose surfacing shall be covered against poor workmanship and faulty installation by a two (2) year written, limited warranty provided by the contractor performing/overseeing the installation.

1.7 *ADDITIONAL MATERIALS*

Furnish to the owner additional materials containing a total of at least 1% of each different color or design of the indoor resilient athletic surfacing used on the project.

1.8 *LEED™ CERTIFICATION*

The indoor resilient athletic surfacing should be able to help this facility to achieve points towards *LEED*™ certification.

LEED categories positively affected by the indoor resilient athletic surfacing:

Product Type			PU with Recycled Base Layer
Building Reuse Maintain Interior Nonstructural Elements	**MR 1.2**	Renovation	1
Construction Waste Management	**MR 2**	Renovation	2
Recycled Content	**MR 4** **20% - 2 points**	New/Renovation	2
Regional Materials	**MR 5** **20% - 2 points**	New/Renovation	2

Materials and Resources Rapidly Renewable Materials	**MR 6**	New/Renovation	1
Indoor Environmental Air Quality Low VOC Adhesives/Sealants	**IEQ 4.1**	New/Renovation	1
Low-emitting Materials Paints and Coatings	**IEQ 4.2**	New/Renovation	1

PART 2 - PRODUCTS

2.1 *MANUFACTURERS*

The basis of the design for the indoor resilient multipurpose surfacing is Polyturf Plus Pad and Pour as provided by Fieldturf or equal. Product shall be manufactured by an ISO 9001 company.

2.2 *MATERIALS.*

A.) Flooring System:

Polyturf Plus 7+2 (9 mm total thickness) consists of a recycled resilient sheet force reduction layer integrated with seamless, liquid applied, and self-leveling 2 mm polyurethane topcoat.

A durable protective color coat shall be applied to a thickness of approximately 7 mils. The finished product shall be a seamless surface heterogeneous resilient multipurpose synthetic flooring system. System shall comply with the following criteria. Colors to be selected from manufacturer's standard range.

Properties	Standards	PolyTurf Plus Pad & Pour Base Mat + Wear Coat +Top Coat
Base Mat Properties		
Width		59"
Length		82 lin. ft
Weight		1.2 lb/sq ft
Density	ASTM D297	.67 min (g/cm?)
Tensile Strength	ASTM D412	88 psi (Die Cast C)
Elongation	ASTM D412	48.5% (Die Cast C)
Compression	ASTM F36	@50 psi 87% @100 psi 91% @200 psi 91%
Tear Strength	ASTM D624	30 PPI Die C
Flexibility	ASTM F147	0-1
Compression Set B	ASTM D395	37% (25% deflection 158°F/22hrs)
Compression Set B	ASTM D395	26% (50% deflection 158°F/22hrs)
2mm Wear Coat Properties		
Shore Hardness	Shore A	80
Tensile Strength	ASTM D412	3200 psi
Elongation	ASTM D412	340%
Tear Strength	ASTM D624	360 PLI
Misc Technical		
Fire Classification	ASTM E648	Class 2
Environmental Certification	GreenGuard	GreenGuard Plus Certified
Sports Characteristics		
Overall Thickness		7+2 (9 mm)
Shock Absorption	ASTM F2772	Class 1
Ball Bounce	ASTM F2772	>90%
Vertical Deformation	ASTM F2772	Passed
Surface Finish Effect	ASTM F2772	Passed
Installation with Multi-Poxy	92% Per ASTM F2170	

1. Game Line Paint:
As approved by the indoor resilient athletic surfacing manufacturer. Colors are to be selected from the manufacturer's standard range.

B. Tarkolay – A high quality low permeance slip sheet vapor retarder designed to separate the installed system from the substrate below. Tarkolay as manufactured by FieldTurf USA, Inc. can be used below, on, or above grade substrates that experience elevated moisture conditions. Moisture tolerances shall not exceed 100% RH per ASTM F2170.

1. Physical properties of the vapor retarder shall conform to the following minimums:

Width	…….	6'6" (2 m)
Length	…….	147'7"' (45 m) approx.
Total Thickness	…….	1.3 mm
Dimensional Stability	PASSED	.01% (EN 1434)
Permeance	Excellent	<0.20 (ASTM E96

PART 3 - EXECUTION

3.1 *EXAMINATION*

A. It is the responsibility of the general contractor/construction manager to ensure that project/site conditions are acceptable for the installation of the indoor resilient athletic flooring.
B. Verify that the area in which the indoor resilient athletic surfacing will be installed is dry and weather tight. Verify that permanent heat, light and ventilation is installed and operable.
C. Verify that all other work that could cause damage, dirt and dust or interrupt the normal pace of the indoor resilient athletic flooring installation is completed or suspended.
D. Verify that there is a stable room temperature of at least 65°F.
E. Verify that there are no foreign materials or objects on the subfloor and that the subfloor is clean and ready for installation.
F. Moisture content less than 98 % RH when tested per ASTM F2170. Follow Fieldturf Installation Recommendations.
G. Do not average the results of the tests. Report all field test results in writing to the General Contractor, Architect, and End User prior to installation.
H. Verify that the concrete subfloor surface pH level is within the 7 - 10 range.
I. Document the results indicating the slab is within manufacturer's tolerances for slab deviation.

3.2 *PREPARATION OF SURFACES*

A. Sand the entire surface of the concrete slab.
B. Sweep the concrete slab so as to remove all dirt and dust. If a sweeping compound is to be used it must be a sweeping compound that does not contain oil or other items that may inhibit the adhesive bond.

C. Slab must be dust free. In the event that dust impairs adhesive bond, priming the slab prior to application of adhesive may be necessary. Follow installation guidelines.

3.3 *INSTALLATION*

A. The installation area shall be closed to all traffic and activity for a period to be set by the indoor resilient athletic surfacing installer. The indoor resilient athletic surfacing installation shall not begin until the installer is familiar with the existing conditions.
B. All necessary precautions should be taken to minimize noise, smell, dust, the use of hazardous materials, and any other items that may inconvenience others.
C. Install the indoor resilient athletic surfacing in strict accordance with the indoor resilient athletic surfacing manufacturer's written instructions.
D. Paint game lines using approved game line paint primer and game line paint in strict accordance with the game line paint manufacturer's instructions.
E. Install appropriate threshold plates or transition strips where necessary.
F. Use only approved adhesive as recommended by the manufacturer.

3.4 *CLEANING*

A. Remove all unused materials, tools, and equipment and dispose of any debris properly. Clean the indoor resilient athletic surfacing in accordance with the manufacturer's instructions.

3.5 *PROTECTION*

If required, protect the indoor resilient athletic surfacing from damage using coverings approved by the manufacturer until acceptance of work by the customer or their authorized representative.

3.6 RELATED STANDARDS AND GUIDELINES

A. ASTM F2170 "Standard Test Method for Determining Relative Humidity In Concrete Floor Slabs Using In-Situ Probes"
B. ASTM F710 "Standard Practice for Preparing Concrete Floors to Receive Resilient Flooring"
C. ACI 302.2R-06 "Guideline for Concrete Slabs that Receive Moisture-Sensitive Flooring Materials"

END OF SECTION

SECTION 09645
ARCHITECTURAL SPECIFICATIONS FOR INDOOR RESILIENT ATHLETIC SURFACING

PART 1 – GENERAL

1.1 *SECTION INCLUDES*

A. Supply and installation of the indoor resilient multipurpose surfacing
B. Application of the game lines
C. References for the construction and preparation of concrete slabs to receive resilient flooring.

1.2 *SUBMITTALS*

A. Product Data:
Manufacturer's promotional brochures, specifications and installation instructions
B. Samples:
1. Submit for selection and approval three (3) sets of the indoor resilient multipurpose surfacing, manufacturer's brochures, samples or sample boards of all of the available colors, textures and styles.
2. Submit color samples of all the available game line paint colors for selection and approval.
C. Closeout Submittals:
1. Submit three (3) copies of the indoor resilient multipurpose surfacing and manufacturer's maintenance instructions.
2. Submit three (3) copies of the material and installation warranties as specified.

1.3 *QUALITY ASSURANCE*

A. Qualifications:
1. The indoor resilient multipurpose surfacing shall have been actively marketed for a minimum of ten (10) years.
2. The indoor resilient multipurpose surfacing shall be manufactured in an ISO 9001 certified plant.
4. The indoor resilient multipurpose surfacing supplier shall be an established firm, experienced in the field, and appointed as a distributor by the manufacturer of the indoor resilient multipurpose surfacing.
5. The installer of the indoor resilient multipurpose surfacing shall have a minimum of five (5) years of experience in the field installing indoor resilient multipurpose surfacing and have worked on at least five (5) projects of similar size, type and complexity.
B. Certifications:
1. Installer to submit the indoor resilient athletic surfacing manufacturer's certification attesting that they are an approved installer of the indoor resilient multipurpose surfacing.
2. The indoor resilient multipurpose surfacing manufacturer to submit official ISO 9001 certification for the facility in which the indoor resilient multipurpose surfacing is manufactured.

C. Testing:
Tests shall be relative for multi-purpose use with certificates from independent testing resources to be made available upon request. Test results shall be no more than 5 years old and performed according to ASTM standard testing procedures.

B. Certifications:
3. Installer to submit the indoor resilient athletic surfacing manufacturer's or distributor's certification attesting that they are an approved installer of the indoor resilient multipurpose surfacing.

C. Testing:
Tests shall be relative for multi-purpose use with certificates from independent testing resources to be made available upon request. Test results shall be no more than 5 years old and performed according to ASTM F2772 standard testing procedures for force reduction, ball bounce, vertical deformation, and surface finish effect.

1.4 *DELIVERY, STORAGE AND HANDLING*

A. Delivery:
Material shall not be delivered until all related work is in place and finished and/or proper storage facilities and conditions can be provided and guaranteed stable according to Fieldturf' recommendations.

B. Storage:
Store the material in a secure, clean and dry location. Maintain temperature between 55° and 85° Fahrenheit.

1.5 *PROJECT/SITE CONDITIONS*

A. It is the responsibility of the general contractor/construction manager to maintain project/site conditions acceptable for the installation of the indoor resilient multipurpose flooring.

B. The area in which the indoor resilient multipurpose surfacing will be installed shall be dry and weather tight. Permanent heat, light and ventilation shall be installed and operable.

C. All other trades shall have completed their work prior to the installation of the resilient athletic flooring. The general contractor or Construction Manager shall maintain a secure and clean working environment before, during and after the installation. Suspension of other trades' work may be authorized providing their work will not damage the new flooring.

D. Maintain a stable room temperature of at least 65°F for a minimum of one (1) week prior to, during, and thereafter installation.

E. An effective low-permeance vapor barrier is placed directly beneath the concrete subfloor. For "on" or "below grade" installations, it is recommended to provide a permanent vapor barrier resistant to long term hydrostatic pressure/moisture exposure. Protrusions should be sealed to prevent moisture migration into the slab. Moisture should not be allowed to

enter the slab after the completed construction.

F. Concrete subfloor surface pH level within the 7 to 10 range dependent upon installation type.
G. Concrete subfloor should be no greater than 1/8" within a 10 ft diameter. This tolerance can be measured in accordance with ASTM E1155. A specified (F_F) of 50 and an (F_L) of 30 should reach this degree of floor flatness and floor level. There is no numerical correlation between F numbers and the deviation from the straight edge, however the above specified numbers should achieve a flat floor with minimal deviation in the slab. Reference ACI 117 and ACI 302.1R. The general contractor should provide a certificate of compliance with the above recommendations.
H. Concrete subfloor must be clean and free of all foreign materials or objects including, but not limited to, curing compounds and sealers.
I. Fill cracks, grooves, voids, depressions, and other minor imperfections with Ardex (or equal) cement-based patching/leveling compounds. Follow the manufacturer's directions. Moveable joints must be treated utilizing specific transitioning joint devices depending upon the architect's recommendations. Follow current ASTM F710 guidelines for the preparation of concrete slabs to receive resilient flooring.
J. Refer to ACI 302.2R "Guidelines for Concrete Slabs that Receive Moisture-Sensitive Flooring Materials" for concrete design and construction.
K. Concrete slab shall be fortified with continual steel reinforcement. Fiber reinforcement alone shall not be considered adequate fortification.

1.6 *WARRANTY*

A. Materials:
The indoor resilient athletic surfacing shall be covered by the manufacturer against product defects for 30 years and moisture warranty for 10 years. The manufacturer of the indoor resilient multipurpose surfacing must provide this warranty upon request.
B. Installation:
The installation of the indoor resilient multipurpose surfacing shall be covered against poor workmanship and faulty installation by a two (2) year written, limited warranty provided by the contractor performing/overseeing the installation.

1.7 *ADDITIONAL MATERIALS*

Furnish to the owner additional materials containing a total of at least 1% of each different color or design of the indoor resilient athletic surfacing used on the project.

1.8 *LEED™ CERTIFICATION*

The indoor resilient athletic surfacing should be able to help this facility to achieve points towards *LEED™* certification.

LEED categories positively affected by the indoor resilient athletic surfacing:

Product Type			PU with Recycled Base Layer
Building Reuse Maintain Interior Nonstructural Elements	MR 1.2	Renovation	1
Construction Waste Management	MR 2	Renovation	2
Recycled Content	MR 4 20% - 2 points	New/Renovation	2
Regional Materials	MR 5 20% - 2 points	New/Renovation	2
Materials and Resources Rapidly Renewable Materials	MR 6	New/Renovation	1
Indoor Environmental Air Quality Low VOC Adhesives/Sealants	IEQ 4.1	New/Renovation	1
Low-emitting Materials Paints and Coatings	IEQ 4.2	New/Renovation	1

PART 2 - PRODUCTS

2.1 *MANUFACTURERS*

The basis of the design for the indoor resilient multipurpose surfacing is Polyturf Plus Pad and Pour as provided by Fieldturf or equal. Product shall be manufactured by an ISO 9001 company.

2.2 *MATERIALS.*

A.) Flooring System:

Polyturf Plus 9+2 (11mm total thickness) consists of a recycled resilient sheet force reduction layer integrated with seamless, liquid applied, and self-leveling 2 mm polyurethane topcoat.

A durable protective color coat shall be applied to a thickness of approximately 7 mils. The finished product shall be a seamless surface heterogeneous resilient multipurpose synthetic flooring system. System shall comply with the following criteria. Colors to be selected from manufacturer's standard range.

Properties	Standards	PolyTurf Plus Pad & Pour Base Mat + Wear Coat +Top Coat
Base Mat Properties		
Width		59″
Length		82 lin. ft
Weight		1.2 lb/sq ft
Density	ASTM D297	.67 min (g/cm?)
Tensile Strength	ASTM D412	88 psi (Die Cast C)
Elongation	ASTM D412	48.5% (Die Cast C)
Compression	ASTM F36	@50 psi 87% @100 psi 91% @200 psi 91%
Tear Strength	ASTM D624	30 PPI Die C
Flexibility	ASTM F147	0-1
Compression Set B	ASTM D395	37% (25% deflection 158°F/22hrs)
Compression Set B	ASTM D395	26% (50% deflection 158°F/22hrs)
2mm Wear Coat Properties		
Shore Hardness	Shore A	80
Tensile Strength	ASTM D412	3200 psi
Elongation	ASTM D412	340%
Tear Strength	ASTM D624	360 PLI
Misc Techical		
Fire Classification	ASTM E648	Class 1
Environmental Certification	GreenGuard	GreenGuard Plus Certified
Sports Characteristics		
Overall Thickness		9+2 (11mm)
Shock Absorption	ASTM F2772	Class 2
Ball Bounce	ASTM F2772	>90%
Vertical Deformation	ASTM F2772	Passed
Surface Finish Effect	ASTM F2772	Passed
Installation with Multi-Poxy	92% Per ASTM F2170	

Game Line Paint:

As approved by the indoor resilient athletic surfacing manufacturer. Colors are to be selected from the manufacturer's standard range.

PART 3 - EXECUTION

3.1 *EXAMINATION*

A. It is the responsibility of the general contractor/construction manager to ensure that project/site conditions are acceptable for the installation of the indoor resilient athletic flooring.

B. Verify that the area in which the indoor resilient athletic surfacing will be installed is dry and weather tight. Verify that permanent heat, light and ventilation is installed and operable.

C. Verify that all other work that could cause damage, dirt and dust or interrupt the normal pace of the indoor resilient athletic flooring installation is completed or suspended.

D. Verify that there is a stable room temperature of at least 65°F.

E. Verify that there are no foreign materials or objects on the subfloor and that the subfloor is clean and ready for installation.

F. Moisture content less than 98 % RH when tested per ASTM F2170. Follow Fieldturf Installation Recommendations.
G. If both tests are performed, use the highest value. Do not average the results of the tests. Report all field test results in writing to the General Contractor, Architect, and End User prior to installation.
H. Verify that the concrete subfloor surface pH level is within the 7 - 10 range.
I. Document the results indicating the slab is within manufacturer's tolerances for slab deviation.

3.2 *PREPARATION OF SURFACES*

A. Sand the entire surface of the concrete slab.
B. Sweep the concrete slab so as to remove all dirt and dust. If a sweeping compound is to be used it must be a sweeping compound that does not contain oil or other items that may inhibit the adhesive bond.
C. Slab must be dust free. In the event that dust impairs adhesive bond, priming the slab prior to application of adhesive may be necessary. Follow installation guidelines.

3.3 *INSTALLATION*

A. The installation area shall be closed to all traffic and activity for a period to be set by the indoor resilient athletic surfacing installer. The indoor resilient athletic surfacing installation shall not begin until the installer is familiar with the existing conditions.
B. All necessary precautions should be taken to minimize noise, smell, dust, the use of hazardous materials, and any other items that may inconvenience others.
C. Install the indoor resilient athletic surfacing in strict accordance with the indoor resilient athletic surfacing manufacturer's written instructions.
D. Paint game lines using approved game line paint primer and game line paint in strict accordance with the game line paint manufacturer's instructions.
E. Install appropriate threshold plates or transition strips where necessary.
F. Use only approved adhesive as recommended by the manufacturer.

3.4 *CLEANING*

A. Remove all unused materials, tools, and equipment and dispose of any debris properly. Clean the indoor resilient athletic surfacing in accordance with the manufacturer's instructions.

3.5 *PROTECTION*

If required, protect the indoor resilient athletic surfacing from damage using coverings approved by the manufacturer until acceptance of work by the customer or their authorized representative.

3.6 RELATED STANDARDS AND GUIDELINES

A. ASTM F2170 "Standard Test Method for Determining Relative Humidity In Concrete Floor Slabs Using In-Situ Probes"
B. ASTM F710 "Standard Practice for Preparing Concrete Floors to Receive

Resilient Flooring"

C. ACI 302.2R-06 "Guideline for Concrete Slabs that Receive Moisture-Sensitive Flooring Materials"

END OF SECTION

PART 1 – GENERAL

1.1 *SECTION INCLUDES*

A. Supply and installation of the indoor resilient multipurpose surfacing
B. Application of the game lines
C. References for the construction and preparation of concrete slabs to receive resilient flooring.

1.2 *SUBMITTALS*

A. Product Data:
Manufacturer's promotional brochures, specifications and installation instructions
B. Samples:
1. Submit for selection and approval three (3) sets of the indoor resilient multipurpose surfacing, manufacturer's brochures, samples or sample boards of all of the available colors, textures and styles.
2. Submit color samples of all the available game line paint colors for selection and approval.
C. Closeout Submittals:
1. Submit three (3) copies of the indoor resilient multipurpose surfacing and manufacturer's maintenance instructions.
2. Submit three (3) copies of the material and installation warranties as specified.

1.3 *QUALITY ASSURANCE*

A. Qualifications:
1. The indoor resilient multipurpose surfacing shall have been actively marketed for a minimum of ten (10) years.
2. The indoor resilient multipurpose surfacing shall be manufactured in an ISO 9001 certified plant.
4. The indoor resilient multipurpose surfacing supplier shall be an established firm, experienced in the field, and appointed as a distributor by the manufacturer of the indoor resilient multipurpose surfacing.
5. The installer of the indoor resilient multipurpose surfacing shall have a minimum of five (5) years of experience in the field installing indoor resilient multipurpose surfacing and have worked on at least five (5) projects of similar size, type and complexity.
B. Certifications:
1. Installer to submit the indoor resilient athletic surfacing manufacturer's certification attesting that they are an approved installer of the indoor resilient multipurpose surfacing.
2. The indoor resilient multipurpose surfacing manufacturer to submit official ISO 9001 certification for the facility in which the indoor resilient multipurpose surfacing is manufactured.

C. Testing:
Tests shall be relative for multi-purpose use with certificates from independent testing resources to be made available upon request. Test

results shall be no more than 5 years old and performed according to ASTM standard testing procedures.

B. Certifications:
   3. Installer to submit the indoor resilient athletic surfacing manufacturer's or distributor's certification attesting that they are an approved installer of the indoor resilient multipurpose surfacing.

C. Testing:
   Tests shall be relative for multi-purpose use with certificates from independent testing resources to be made available upon request. Test results shall be no more than 5 years old and performed according to ASTM F2772 standard testing procedures for force reduction, ball bounce, vertical deformation, and surface finish effect.

1.4 *DELIVERY, STORAGE AND HANDLING*

A. Delivery:
   Material shall not be delivered until all related work is in place and finished and/or proper storage facilities and conditions can be provided and guaranteed stable according to Fieldturf' recommendations.
B. Storage:
   Store the material in a secure, clean and dry location. Maintain temperature between 55° and 85° Fahrenheit.

1.5 *PROJECT/SITE CONDITIONS*

A. It is the responsibility of the general contractor/construction manager to maintain project/site conditions acceptable for the installation of the indoor resilient multipurpose flooring.
B. The area in which the indoor resilient multipurpose surfacing will be installed shall be dry and weather tight. Permanent heat, light and ventilation shall be installed and operable.
C. All other trades shall have completed their work prior to the installation of the resilient athletic flooring. The general contractor or Construction Manager shall maintain a secure and clean working environment before, during and after the installation. Suspension of other trades' work may be authorized providing their work will not damage the new flooring.
D. Maintain a stable room temperature of at least 65°F for a minimum of one (1) week prior to, during, and thereafter installation.
E. An effective low-permeance vapor barrier is placed directly beneath the concrete subfloor. For "on" or "below grade" installations, it is recommended to provide a permanent vapor barrier resistant to long term hydrostatic pressure/moisture exposure. Protrusions should be sealed to prevent moisture migration into the slab. Moisture should not be allowed to enter the slab after the completed construction.
F. Concrete subfloor surface pH level within the 7 to 10 range dependent upon installation type.
G. Concrete subfloor should be no greater than 1/8" within a 10 ft diameter. This tolerance can be measured in accordance with ASTM E1155.
   A specified (F_F) of 50 and an (F_L) of 30 should reach this degree of floor

flatness and floor level. There is no numerical correlation between F numbers and the deviation from the straight edge, however the above specified numbers should achieve a flat floor with minimal deviation in the slab. Reference ACI 117 and ACI 302.1R. The general contractor should provide a certificate of compliance with the above recommendations.

H. Concrete subfloor must be clean and free of all foreign materials or objects including, but not limited to, curing compounds and sealers.

I. Fill cracks, grooves, voids, depressions, and other minor imperfections with Ardex (or equal) cement-based patching/leveling compounds. Follow the manufacturer's directions. Moveable joints must be treated utilizing specific transitioning joint devices depending upon the architect's recommendations. Follow current ASTM F710 guidelines for the preparation of concrete slabs to receive resilient flooring.

J. Refer to ACI 302.2R "Guidelines for Concrete Slabs that Receive Moisture-Sensitive Flooring Materials" for concrete design and construction.

K. Concrete slab shall be fortified with continual steel reinforcement. Fiber reinforcement alone shall not be considered adequate fortification.

1.6 *WARRANTY*

A. Materials:
The indoor resilient athletic surfacing shall be covered by the manufacturer against product defects for 30 years and moisture warranty for 10 years. The manufacturer of the indoor resilient multipurpose surfacing must provide this warranty upon request.

B. Installation:
The installation of the indoor resilient multipurpose surfacing shall be covered against poor workmanship and faulty installation by a two (2) year written, limited warranty provided by the contractor performing/overseeing the installation.

1.7 *ADDITIONAL MATERIALS*

Furnish to the owner additional materials containing a total of at least 1% of each different color or design of the indoor resilient athletic surfacing used on the project.

1.8 *LEED™ CERTIFICATION*

The indoor resilient athletic surfacing should be able to help this facility to achieve points towards *LEED*™ certification.

LEED categories positively affected by the indoor resilient athletic surfacing:

Product Type			PU with Recycled Base Layer
Building Reuse Maintain Interior Nonstructural Elements	**MR 1.2**	Renovation	1
Construction Waste Management	**MR 2**	Renovation	2
Recycled Content	**MR 4** **20% - 2 points**	New/Renovation	2
Regional Materials	**MR 5** **20% - 2 points**	New/Renovation	2

Materials and Resources Rapidly Renewable Materials	**MR 6**	New/Renovation	1
Indoor Environmental Air Quality Low VOC Adhesives/Sealants	**IEQ 4.1**	New/Renovation	1
Low-emitting Materials Paints and Coatings	**IEQ 4.2**	New/Renovation	1

PART 2 - PRODUCTS

2.1 *MANUFACTURERS*

The basis of the design for the indoor resilient multipurpose surfacing is Polyturf Plus Pad and Pour as provided by Fieldturf or equal. Product shall be manufactured by an ISO 9001 company.

2.2 *MATERIALS.*

A.) Flooring System:

Polyturf Plus 9+2 (11 mm total thickness) consists of a recycled resilient sheet force reduction layer integrated with seamless, liquid applied, and self-leveling 2 mm polyurethane topcoat.

A durable protective color coat shall be applied to a thickness of approximately 7 mils. The finished product shall be a seamless surface heterogeneous resilient multipurpose synthetic flooring system. System shall comply with the following criteria. Colors to be selected from manufacturer's standard range.

Properties	**Standards**	**PolyTurf Plus Pad & Pour** **Base Mat + Wear Coat +Top Coat**
Base Mat Properties		
Width		59"
Length		82 lin. ft
Weight		1.2 lb/sq ft
Density	ASTM D297	.67 min (g/cm?)
Tensile Strength	ASTM D412	88 psi (Die Cast C)
Elongation	ASTM D412	48.5% (Die Cast C)
Compression	ASTM F36	@50 psi 87% @100 psi 91% @200 psi 91%
Tear Strength	ASTM D624	30 PPI Die C
Flexibility	ASTM F147	0-1
Compression Set B	ASTM D395	37% (25% deflection 158°F/22hrs)
Compression Set B	ASTM D395	26% (50% deflection 158°F/22hrs)
2mm Wear Coat Properties		
Shore Hardness	Shore A	80
Tensile Strength	ASTM D412	3200 psi
Elongation	ASTM D412	340%
Tear Strength	ASTM D624	360 PLI
Misc Technical		
Fire Classification	ASTM E648	Class 2
Environmental Certification	GreenGuard	GreenGuard Plus Certified
Sports Characteristics		
Overall Thickness		9+2 (11 mm)
Shock Absorption	ASTM F2772	Class 2
Ball Bounce	ASTM F2772	>90%
Vertical Deformation	ASTM F2772	Passed
Surface Finish Effect	ASTM F2772	Passed
Installation with Multi-Poxy	92% Per ASTM F2170	

1. Game Line Paint:
As approved by the indoor resilient athletic surfacing manufacturer. Colors are to be selected from the manufacturer's standard range.

B. Tarkolay – A high quality low permeance slip sheet vapor retarder designed to separate the installed system from the substrate below. Tarkolay as manufactured by FieldTurf USA, Inc. can be used below, on, or above grade substrates that experience elevated moisture conditions. Moisture tolerances shall not exceed 100% RH per ASTM F2170.

1. Physical properties of the vapor retarder shall conform to the following minimums:

Width	…….	6'6" (2 m)
Length	…….	147'7"' (45 m) approx.
Total Thickness	…….	1.3 mm
Dimensional Stability	PASSED	.01% (EN 1434)
Permeance	Excellent	<0.20 (ASTM E96

PART 3 - EXECUTION

3.1 *EXAMINATION*

A. It is the responsibility of the general contractor/construction manager to ensure that project/site conditions are acceptable for the installation of the indoor resilient athletic flooring.
B. Verify that the area in which the indoor resilient athletic surfacing will be installed is dry and weather tight. Verify that permanent heat, light and ventilation is installed and operable.
C. Verify that all other work that could cause damage, dirt and dust or interrupt the normal pace of the indoor resilient athletic flooring installation is completed or suspended.
D. Verify that there is a stable room temperature of at least 65°F.
E. Verify that there are no foreign materials or objects on the subfloor and that the subfloor is clean and ready for installation.
F. Moisture content less than 98 % RH when tested per ASTM F2170. Follow Fieldturf Installation Recommendations.
G. Do not average the results of the tests. Report all field test results in writing to the General Contractor, Architect, and End User prior to installation.
H. Verify that the concrete subfloor surface pH level is within the 7 - 10 range.
I. Document the results indicating the slab is within manufacturer's tolerances for slab deviation.

3.2 *PREPARATION OF SURFACES*

A. Sand the entire surface of the concrete slab.
B. Sweep the concrete slab so as to remove all dirt and dust. If a sweeping compound is to be used it must be a sweeping compound that does not contain oil or other items that may inhibit the adhesive bond.

C. Slab must be dust free. In the event that dust impairs adhesive bond, priming the slab prior to application of adhesive may be necessary. Follow installation guidelines.

3.3 *INSTALLATION*

A. The installation area shall be closed to all traffic and activity for a period to be set by the indoor resilient athletic surfacing installer. The indoor resilient athletic surfacing installation shall not begin until the installer is familiar with the existing conditions.
B. All necessary precautions should be taken to minimize noise, smell, dust, the use of hazardous materials, and any other items that may inconvenience others.
C. Install the indoor resilient athletic surfacing in strict accordance with the indoor resilient athletic surfacing manufacturer's written instructions.
D. Paint game lines using approved game line paint primer and game line paint in strict accordance with the game line paint manufacturer's instructions.
E. Install appropriate threshold plates or transition strips where necessary.
F. Use only approved adhesive as recommended by the manufacturer.

3.4 *CLEANING*

A. Remove all unused materials, tools, and equipment and dispose of any debris properly. Clean the indoor resilient athletic surfacing in accordance with the manufacturer's instructions.

3.5 *PROTECTION*

If required, protect the indoor resilient athletic surfacing from damage using coverings approved by the manufacturer until acceptance of work by the customer or their authorized representative.

3.6 RELATED STANDARDS AND GUIDELINES

A. ASTM F2170 "Standard Test Method for Determining Relative Humidity In Concrete Floor Slabs Using In-Situ Probes"
B. ASTM F710 "Standard Practice for Preparing Concrete Floors to Receive Resilient Flooring"
C. ACI 302.2R-06 "Guideline for Concrete Slabs that Receive Moisture-Sensitive Flooring Materials"

END OF SECTION

SECTION 09645
ARCHITECTURAL SPECIFICATIONS FOR INDOOR RESILIENT ATHLETIC SURFACING

PART 1 – GENERAL

1.1 *SECTION INCLUDES*

A. Supply and installation of the indoor resilient multipurpose surfacing
B. Application of the game lines
C. References for the construction and preparation of concrete slabs to receive resilient flooring.

1.2 *SUBMITTALS*

A. Product Data:
Manufacturer's promotional brochures, specifications and installation instructions
B. Samples:
1. Submit for selection and approval three (3) sets of the indoor resilient multipurpose surfacing, manufacturer's brochures, samples or sample boards of all of the available colors, textures and styles.
2. Submit color samples of all the available game line paint colors for selection and approval.
C. Closeout Submittals:
1. Submit three (3) copies of the indoor resilient multipurpose surfacing and manufacturer's maintenance instructions.
2. Submit three (3) copies of the material and installation warranties as specified.

1.3 *QUALITY ASSURANCE*

A. Qualifications:
1. The indoor resilient multipurpose surfacing shall have been actively marketed for a minimum of ten (10) years.
2. The indoor resilient multipurpose surfacing shall be manufactured in an ISO 9001 certified plant.
4. The indoor resilient multipurpose surfacing supplier shall be an established firm, experienced in the field, and appointed as a distributor by the manufacturer of the indoor resilient multipurpose surfacing.
5. The installer of the indoor resilient multipurpose surfacing shall have a minimum of five (5) years of experience in the field installing indoor resilient multipurpose surfacing and have worked on at least five (5) projects of similar size, type and complexity.
B. Certifications:
1. Installer to submit the indoor resilient athletic surfacing manufacturer's certification attesting that they are an approved installer of the indoor resilient multipurpose surfacing.
2. The indoor resilient multipurpose surfacing manufacturer to submit official ISO 9001 certification for the facility in which the indoor resilient multipurpose surfacing is manufactured.

C. Certifications:
   3. Installer to submit the indoor resilient athletic surfacing manufacturer's or distributor's certification attesting that they are an approved installer of the indoor resilient multipurpose surfacing.

1.4 *DELIVERY, STORAGE AND HANDLING*

A. Delivery:
   Material shall not be delivered until all related work is in place and finished and/or proper storage facilities and conditions can be provided and guaranteed stable according to Fieldturf' recommendations.

B. Storage:
   Store the material in a secure, clean and dry location. Maintain temperature between 55° and 85° Fahrenheit.

1.5 *PROJECT/SITE CONDITIONS*

A. The area in which the indoor resilient multipurpose surfacing will be installed shall be dry and weather tight. Permanent heat, light and ventilation shall be installed and operable.

B. All other trades shall have completed their work prior to the installation of the resilient athletic flooring. The general contractor or Construction Manager shall maintain a secure and clean working environment before, during and after the installation. Suspension of other trades' work may be authorized providing their work will not damage the new flooring.

C. Maintain a stable room temperature of at least 65°F for a minimum of one (1) week prior to, during, and thereafter installation.

D. Concrete subfloor should be no greater than 1/8" within a 10 ft diameter.

1.6 *WARRANTY*

A. Materials:
   The indoor resilient athletic surfacing shall be covered by the manufacturer against product defects for 30 years. The manufacturer of the indoor resilient multipurpose surfacing must provide this warranty upon request.

B. Installation:
   The installation of the indoor resilient multipurpose surfacing shall be covered against poor workmanship and faulty installation by a two (2) year written, limited warranty provided by the contractor performing/overseeing the installation.

1.7 *ADDITIONAL MATERIALS*

Furnish to the owner additional materials containing a total of at least 1% of each different color or design of the indoor resilient athletic surfacing used on the project.

PART 2 - PRODUCTS

2.1 *MANUFACTURERS*
The basis of the design for the indoor resilient multipurpose surfacing is Polyturf Plus Restart as provided by Fieldturf or equal. Product shall be manufactured by an ISO 9001 company.

2.2 *MATERIALS.*
A.) Flooring System:
Polyturf Plus 2mm over pour system.

A durable protective color coat shall be applied to a thickness of approximately 7 mils. The finished product shall be a seamless surface heterogeneous resilient multipurpose synthetic flooring system. System shall comply with the following criteria. Colors to be selected from manufacturer's standard range. Colors selected from standard range.

B. Game Line Paint:
As approved by the indoor resilient athletic surfacing manufacturer. Colors are to be selected from the manufacturer's standard range.

PART 3 - EXECUTION

3.1 *EXAMINATION*
A. Verify that the area in which the indoor resilient athletic surfacing will be installed is dry and weather tight. Verify that permanent heat, light and ventilation is installed and operable.
B. Verify that all other work that could cause damage, dirt and dust or interrupt the normal pace of the indoor resilient athletic flooring installation is completed or suspended.
C. Verify that there is a stable room temperature of at least 65°F.
D. Verify that there are no foreign materials or objects on the subfloor and that the subfloor is clean and ready for installation.
E. Ambient relative humidity should range between 40%-65%.

3.2 *PREPARATION OF SURFACES*
A. Sand the entire surface of the existing urethane and vacuum clean.
B. Surface must be dust free and free of contaminants that may impair proper bonding.

3.3 *INSTALLATION*
A. The installation area shall be closed to all traffic and activity for a period to be set by the indoor resilient athletic surfacing installer. The indoor resilient

athletic surfacing installation shall not begin until the installer is familiar with the existing conditions.

B. All necessary precautions should be taken to minimize noise, smell, dust, the use of hazardous materials, and any other items that may inconvenience others.
C. Install the indoor resilient athletic surfacing in strict accordance with the indoor resilient athletic surfacing manufacturer's written instructions.
D. Paint game lines using approved game line paint primer and game line paint in strict accordance with the game line paint manufacturer's instructions.
E. Install appropriate threshold plates or transition strips where necessary.
F. Allow the new installation to cure for a minimum of 14 days prior to placement and operation of bleachers and/or other portable athletic equipment.

3.4 *CLEANING*

A. Remove all unused materials, tools, and equipment and dispose of any debris properly. Clean the indoor resilient athletic surfacing in accordance with the manufacturer's instructions.

3.5 *PROTECTION*

If required, protect the indoor resilient athletic surfacing from damage using coverings approved by the manufacturer until acceptance of work by the customer or their authorized representative.

3.6 RELATED STANDARDS AND GUIDELINES

A. ASTM F710 "Standard Practice for Preparing Concrete Floors to Receive Resilient Flooring"

END OF SECTION

TEST REPORT

DATE: 09-20-2018 **Page 1 of 1** **TEST NUMBER**: 0250479

CLIENT	Tarkett Sports

TEST METHOD CONDUCTED	ASTM D6007 Standard Test Method for Determining Formaldehyde Concentrations in Air from Wood Products Using a Small-Scale Chamber

DESCRIPTION OF TEST SAMPLE	
IDENTIFICATION	Lumaflex
CONSTRUCTION	Birch Composite Plywood
REFERENCE	Invoice FieldTurf USA Inc./Tarkett Sports

GENERAL PRINCIPLE

This test method covers a small scale procedure for measuring formaldehyde emission potential from wood products. The formaldehyde level is determined by collecting air-borne formaldehyde in a small distilled water reservoir within a closed desiccator. The quantity of formaldehyde is determined by a modification of the National Institute for Occupational Safety and Health (NIOSH) 3500 chromotropic acid test procedure. The sample was deconstructed according to CARB II requirements.

Wood products typically evaluated by this test method are made with urea-formaldehyde adhesives and include but are not limited to particleboard, hardwood, plywood and medium-density fiber-board.

TEST RESULTS

	Formaldehyde	Lowest Calibrated Level	Blank Standard
Lumaflex Fit	<0.025 ppm	.025 ppm	<.025 ppm

COMMENTS

This material, as received, would likely meet the requirements set forth under the CARB II program established by the California Air Resource Board.

MAXIMUM ALLOWABLE				
HWPW-VA	**HWPW-CC**	**PB**	**MDF**	**tMDF**
0.05	0.05	0.09	0.11	0.13

APPROVED BY: Gary Asbury

This report is provided for the exclusive use of the client to whom it is addressed. It may be used in its entirety to gain product acceptance from duly constituted authorities. This report applies only to those samples tested and is not necessarily indicative of apparently identical of similar products. This report, or the name of Professional Testing Laboratory Inc. shall not be used under any circumstance in advertising to the general public.

714 Glenwood Place Dalton, GA 30721 Phone: 706-226-3283 Fax: 706-226-6787 email: protest@optilink.us

SECTION 09 65 66
ARCHITECTURAL SPECIFICATIONS FOR INDOOR RESILIENT ATHLETIC SURFACING

PART 1 – GENERAL

1.1 *SECTION INCLUDES*

A. Supply and installation of the indoor resilient multipurpose surfacing
B. Application of the game lines
C. References for the correct construction and preparation of concrete slabs to receive resilient flooring.

1.2 *SUBMITTALS*

A. Product Data:
   1. Manufacturer's promotional brochures, specifications and installation instructions
B. Manufacturer Certifications:
   1. Provide certification that accurately identifies the Original Equipment Manufacturer (OEM) of flooring furnished for this project including manufacturer's name, address and factory location.
   2. Suppliers of private label flooring for this project must identify themselves as such and fully disclose the OEM information listed above.
   3. All "manufacturer" requirements in these specifications must be complied with by the OEM, including warranties, certifications, qualifications, product data, test results, environmental requirements, performance data, etc.
C. Samples:
   1. Submit for selection and approval three (3) sets of the indoor resilient multipurpose surfacing, manufacturer's brochures, samples or sample boards of all of the available colors, textures and styles.
   2. Submit color samples of all the available game line paint colors for selection and approval.
D. Closeout Submittals:
   1. Submit three (3) copies of the indoor resilient multipurpose surfacing and manufacturer's maintenance instructions.
   2. Submit three (3) copies of the material and installation warranties as specified.

1.3 *QUALITY ASSURANCE*

A. Qualifications:
   1. The indoor resilient multipurpose surfacing shall have been actively marketed for a minimum of ten (10) years.
   2. The indoor resilient multipurpose surfacing shall be manufactured in an ISO 9001 certified plant.
   3. The indoor resilient multipurpose surfacing shall be manufactured in an ISO 14001 certified plant.
   4. The indoor resilient multipurpose surfacing supplier shall be an established firm, experienced in the field, and competent in the techniques required by the manufacturer.
   5. The installer of the indoor resilient multipurpose surfacing shall have a minimum of five (5) years of experience in the field installing indoor resilient multipurpose surfacing and have worked on at least five (5) projects of similar size, type and complexity.

B. Certifications:
   1. Installer to submit the indoor resilient athletic surfacing manufacturer's certification attesting that they are a trained installer of the indoor resilient multipurpose surfacing.
   2. The indoor resilient multipurpose surfacing manufacturer to submit official ISO 9001 certification for the facility in which the indoor resilient multipurpose surfacing is manufactured.

C. Testing:
   1. Tests shall be relative for multi-purpose use with certificates from independent testing resources to be made available upon request.
   2. Test results shall be no more than 5 years old and performed according to ASTM standard testing procedures.

1.4 *DELIVERY, STORAGE AND HANDLING*

A. Delivery:
   Material shall not be delivered until all related work is in place and finished and/or proper storage facilities and conditions can be provided and guaranteed stable according to FieldTurf USA, Inc. recommendations.

B. Storage:
   1. Store the material in a secure, clean and dry location.
   2. Maintain temperature between 55° and 85° Fahrenheit.
   3. Store the indoor resilient athletic surfacing rolls in an upright position on a smooth flat surface immediately upon delivery to jobsite.
   4. Rolls shipped in rigid protective cardboard containers can be laid horizontally prior to unpacking and installation.

1.5 *PROJECT/SITE CONDITIONS*

A. It is the responsibility of the general contractor/construction manager to maintain project/site conditions acceptable for the installation of the indoor resilient multipurpose flooring.

B. The area in which the indoor resilient multipurpose surfacing will be installed shall be dry and weather tight. Permanent heat, light and ventilation shall be installed and operable.

C. All other trades shall have completed their work prior to the installation of the resilient athletic flooring. The general contractor or construction manager shall maintain a secure and clean working environment before, during and after the installation.

D. Maintain a stable room temperature of at least 65°F for a minimum of one (1) week prior to, during and thereafter installation.

E. An effective low-permeance vapor barrier is placed directly beneath the concrete subfloor. For "on" or "below grade" installations, it is recommended to provide a permanent vapor barrier resistant to long term hydrostatic pressure/moisture exposure. Protrusions should be sealed to prevent moisture migration into the slab. Moisture should not be allowed to enter the slab after the completed construction.

F. Concrete subfloor surface pH level within the 7 to 11 range dependent upon installation type.

G. Concrete subfloor should be no greater than 1/8" within a 10 ft diameter. This tolerance can be measured in accordance with ASTM E1155. A specified (F_F) of 50 and an (F_L) of 30 should reach this degree of floor flatness and floor level. There is no numerical correlation between F numbers and the deviation from the straight

edge. However, the above specified numbers should achieve a flat floor with minimal deviation in the slab. Reference ACI 117 and ACI 302.1R. The general contractor should provide a certificate of compliance with the above recommendations.

H. Concrete subfloor must be clean and free of all foreign materials or objects including, but not limited to, curing compounds and sealers.

I. Fill cracks, grooves, voids, depressions, and other minor imperfections. Follow the manufacturer's directions. Moveable joints must be treated utilizing specific transitioning joint devices depending upon the architect's recommendations. Follow current ASTM F710 guidelines for the preparation of concrete slabs to receive resilient flooring.

J. Refer to ACI 302.2R "Guidelines for Concrete Slabs that Receive Moisture-Sensitive Flooring Materials" for concrete design and construction.

K. Concrete slab shall be fortified with continual steel reinforcement. Fiber reinforcement alone shall not be considered adequate fortification.

1.6 *WARRANTY*

A. Special Limited Warranty:
   1. Manufacturer's standard form in which manufacturer agrees to repair or replace sports flooring including labor that fails within specified warranty period.

B. Material warranty must be direct from the product manufacturer.
   1. Material warranties from separate or third party insurance providers are not valid.
   2. Material warranties must come from original manufacturer or division thereof. Private label warranties from distributors or brokers are not valid. Supply original point of manufacturing upon request.

C. Failures include, but are not limited to, the following:
   1. Material manufacturing defects.
   2. Surface wear and deterioration to the point of wear-through of wear layer per ASTM F410/ASTM F1303.
   3. Failure due to substrate moisture exposure exceeding 80 percent relative humidity when tested according to ASTM F2170.

D. Warranty Period:
   1. For material defects and surface wear-through: **10** years from date of substantial completion.

E. Installer's Limited Warranty:
   1. Installer's standard form in which installer agrees to repair or replace sports flooring that fails due to poor workmanship or faulty installation within the specified warranty period.
   2. Warranty Period: 2 years from date of substantial completion.

1.7 *ADDITIONAL MATERIALS*

A. Furnish to the owner additional materials containing a total of at least 1% of each different color or design of the indoor resilient athletic surfacing used on the project.

1.8 *LEED™ CERTIFICATION*

A. The indoor resilient athletic surfacing should be able to help this facility to achieve points towards *LEED™ certification.* Flooring system must be certified by FloorScore.
B. LEED categories positively affected by the indoor resilient athletic surfacing:

LEED™ V4 Credit		Contribution
Materials & Resources: Building Product Disclosure & Optimization (BPDO)		
MRc3: Sourcing of Raw Materials	Options 1 & 2	2 Points
MRc4: Material Ingredients	Option 1	1 Point
MRc5: Construction and Demolition Management	Reclamation and Recycling	ReStart® Program
Indoor Environmental Quality		
EQc2: Low-Emitting Materials	TVOC: 0.5 mg/m3 or less	FloorScore®

PART 2 - PRODUCTS

2.1 *MANUFACTURERS*

A. The basis of the design for the indoor resilient multipurpose surfacing is Dancefloor and Inspiration Pro system as manufactured by Tarkett.
B. All other installation accessories and related components must be either made or approved by the indoor resilient athletic surfacing manufacturer.
C. Other products may be approved as equal if deemed qualified and submitted in accordance with the General Conditions.
D. Test reports confirming compliance from an independent sports laboratory must be provided along with samples, technical data, installation, maintenance, and warranty prior to acceptance as an alternative product.

2.2 *MATERIALS*

A. Dancefloor - Prefabricated sport surface 3.5 mm with solid color design and slightly textured embossed surface as supplied by Tarkett.
   1. Surface shall be a satin/matte finish.
   2. The Inspiration Pro System shall incorporate Inspiration Pro double tongue and grooved multi-ply engineered panels, force reduction cushion, and appropriate vapor retarder.

B. Physical properties of the indoor resilient athletic surfacing shall conform to the following minimums:

Width	—	6′ 6″ (2 m)
Length	—	75′ (23m)) approx.
Wear Layer	EN 429	0.65 mm
Total Thickness	EN 428/EN 429	3.5 mm
Total Combined Thickness		47 mm (1.85″)
Wear Layer	Type 1– Grade 1	ASTM F1303/F410
Weight	EN 430	3.3kg/m² (0.72 lbs./sq. ft.)
Force Reduction	ASTM F2772	74% +/-
Slip Resistance	AS 4586	P3
Reaction to Fire	ISO AS 9239-1	8.6 kW/m²
Chemical Resistance	ISO 26987/EN 423	High
Dimensional Stability	ISO 23999/EN 434	≤0.10%
Abrasion Resistance	EN 660: Part 2	Group T: ≤ 2.0mm³
Static Load Limit	PASSED	ASTM F970- Load 175 Lbs.
Phthalate-free technology	—	YES
REACH Compliant	—	YES
Heavy Metals	—	NO
ISO 9001	—	YES
ISO 14001	—	YES

1. Color: As available from the indoor resilient athletic surfacing manufacturer's standard range.
    a. Colors available: Solid Black or Solid Gray

C. Welding Rod: As supplied by the indoor resilient athletic surfacing manufacturer or supplier.
1. Color to blend with the indoor resilient athletic surfacing color or design.
2. All seams shall be welded to create a monolithic and impermeable surface.

D. Adhesive: As approved by the indoor resilient athletic surfacing manufacturer.

PART 3 - EXECUTION

3.1 *EXAMINATION*

A. It is the responsibility of the general contractor/construction manager to ensure that project/site conditions are acceptable for the installation of the indoor resilient athletic flooring.
B. Verify that the area in which the indoor resilient athletic surfacing will be installed is dry and weather tight. Verify that permanent heat, light and ventilation are installed and operable.
C. Verify that all other work that could cause damage, dirt and dust or interrupt the normal pace of the indoor resilient athletic flooring installation is completed or suspended.
D. Verify that there is a stable room temperature of at least 65◦F.
E. Verify that there are no foreign materials or objects on the subfloor and that the subfloor is clean and ready for installation.
F. *Concrete Subfloor: moisture content less than 85% RH when tested per ASTM F2170.*
G. Follow Fieldturf USA, Inc. installation recommendations.
H. Do not average the results of the tests. Report all field test results in writing to the General Contractor, Architect, and End User prior to installation.
I. Verify that the concrete subfloor surface pH level is within the 7 - 11 range.
J. Document the results confirming the slab is within manufacturer's tolerances for slab deviation.

3.2 *PREPARATION OF SURFACES*

A. Sand the entire surface of the concrete slab.
B. Sweep the concrete slab so as to remove all dirt and dust. If a sweeping compound is to be used it must be a sweeping compound that does not contain oil or other items that may inhibit the adhesive bond.
C. Slab must be dust free. In the event that dust impairs adhesive bond, priming the slab prior to application of adhesive may be necessary. Follow installation guidelines.
D. Follow OSHA guidelines.

3.3 *INSTALLATION*

A. The installation area shall be closed to all traffic and activity for a period to be set by the indoor resilient athletic surfacing installer. The indoor resilient athletic surfacing installation shall not begin until the installer is familiar with the existing conditions.
B. All necessary precautions should be taken to minimize noise, smell, dust, the use of hazardous materials and any other items that may inconvenience others.
C. Install the indoor resilient athletic surfacing in strict accordance with the indoor resilient athletic surfacing manufacturer's written instructions.
D. Install the indoor resilient athletic surfacing minimizing cross seams. Provide a seam diagram during the submittal process for approval prior to installation. Vinyl Sheet Flooring Seams: Comply with ASTM F 1516. Rout joints and heat weld to permanently and seamlessly fuse sections together.
E. Paint game lines using approved game line paint primer and game line paint in strict accordance with the game line paint manufacturer's instructions.
F. Install appropriate threshold plates or transition strips where necessary.

2.0 *CLEANING*

A. Remove all unused materials, tools, and equipment and dispose of any debris properly. Clean the indoor resilient athletic surfacing in accordance with the manufacturer's instructions.

3.6 *PROTECTION*

A. If required, protect the indoor resilient athletic surfacing from damage using coverings approved by the manufacturer until acceptance of work by the customer or their authorized representative.

3.7 *RELATED STANDARDS AND GUIDELINES*

A. ASTM F2170 "Standard Test Method for Determining Relative Humidity In Concrete Floor Slabs Using In-Situ Probes"
B. ASTM F710 "Standard Practice for Preparing Concrete Floors to Receive Resilient Flooring"
C. ACI 302.2R-06 "Guideline for Concrete Slabs that Receive Moisture-Sensitive Flooring Materials"
D. ASTM F2772-11 "Standard Specification for Athletic Performance Properties of Indoor Sports Floor Systems"

END OF SECTION

SECTION 09 65 66
ARCHITECTURAL SPECIFICATIONS FOR INDOOR RESILIENT ATHLETIC SURFACING

PART 1 – GENERAL

1.1 *SECTION INCLUDES*

A. Supply and installation of the indoor resilient multipurpose surfacing
B. Application of the game lines
C. References for the correct construction and preparation of concrete slabs to receive resilient flooring.

1.2 *SUBMITTALS*

A. Product Data:
   1. Manufacturer's promotional brochures, specifications and installation instructions
B. Manufacturer Certifications:
   1. Provide certification that accurately identifies the Original Equipment Manufacturer (OEM) of flooring furnished for this project including manufacturer's name, address and factory location.
   2. Suppliers of private label flooring for this project must identify themselves as such and fully disclose the OEM information listed above.
   3. All "manufacturer" requirements in these specifications must be complied with by the OEM, including warranties, certifications, qualifications, product data, test results, environmental requirements, performance data, etc.
C. Samples:
   1. Submit for selection and approval three (3) sets of the indoor resilient multipurpose surfacing, manufacturer's brochures, samples or sample boards of all of the available colors, textures and styles.
   2. Submit color samples of all the available game line paint colors for selection and approval.
D. Closeout Submittals:
   1. Submit three (3) copies of the indoor resilient multipurpose surfacing and manufacturer's maintenance instructions.
   2. Submit three (3) copies of the material and installation warranties as specified.

1.3 *QUALITY ASSURANCE*

A. Qualifications:
   1. The indoor resilient multipurpose surfacing shall have been actively marketed for a minimum of ten (10) years.
   2. The indoor resilient multipurpose surfacing shall be manufactured in an ISO 9001 certified plant.
   3. The indoor resilient multipurpose surfacing shall be manufactured in an ISO 14001 certified plant.
   4. The indoor resilient multipurpose surfacing supplier shall be an established firm, experienced in the field, and competent in the techniques required by the manufacturer.
   5. The installer of the indoor resilient multipurpose surfacing shall have a minimum of five (5) years of experience in the field installing indoor resilient multipurpose surfacing and have worked on at least five (5) projects of similar size, type and complexity.

B. Certifications:
   1. Installer to submit the indoor resilient athletic surfacing manufacturer's certification attesting that they are a trained installer of the indoor resilient multipurpose surfacing.
   2. The indoor resilient multipurpose surfacing manufacturer to submit official ISO 9001 certification for the facility in which the indoor resilient multipurpose surfacing is manufactured.

C. Testing:
   1. Tests shall be relative for multi-purpose use with certificates from independent testing resources to be made available upon request.
   2. Test results shall be no more than 5 years old and performed according to ASTM standard testing procedures.

1.4 *DELIVERY, STORAGE AND HANDLING*

A. Delivery:
   Material shall not be delivered until all related work is in place and finished and/or proper storage facilities and conditions can be provided and guaranteed stable according to FieldTurf USA, Inc. recommendations.

B. Storage:
   1. Store the material in a secure, clean and dry location.
   2. Maintain temperature between 55° and 85° Fahrenheit.
   3. Store the indoor resilient athletic surfacing rolls in an upright position on a smooth flat surface immediately upon delivery to jobsite.
   4. Rolls shipped in rigid protective cardboard containers can be laid horizontally prior to unpacking and installation.

1.5 *PROJECT/SITE CONDITIONS*

A. It is the responsibility of the general contractor/construction manager to maintain project/site conditions acceptable for the installation of the indoor resilient multipurpose flooring.

B. The area in which the indoor resilient multipurpose surfacing will be installed shall be dry and weather tight. Permanent heat, light and ventilation shall be installed and operable.

C. All other trades shall have completed their work prior to the installation of the resilient athletic flooring. The general contractor or construction manager shall maintain a secure and clean working environment before, during and after the installation.

D. Maintain a stable room temperature of at least 65°F for a minimum of one (1) week prior to, during and thereafter installation.

E. An effective low-permeance vapor barrier is placed directly beneath the concrete subfloor. For "on" or "below grade" installations, it is recommended to provide a permanent vapor barrier resistant to long term hydrostatic pressure/moisture exposure. Protrusions should be sealed to prevent moisture migration into the slab. Moisture should not be allowed to enter the slab after the completed construction.

F. Concrete subfloor surface pH level within the 7 to 11 range dependent upon installation type.

G. Concrete subfloor should be no greater than 1/8" within a 10 ft diameter. This tolerance can be measured in accordance with ASTM E1155. A specified (F_F) of 50 and an (F_L) of 30 should reach this degree of floor flatness and floor level. There is no numerical correlation between F numbers and the deviation from the straight

edge. However, the above specified numbers should achieve a flat floor with minimal deviation in the slab. Reference ACI 117 and ACI 302.1R. The general contractor should provide a certificate of compliance with the above recommendations.

H. Concrete subfloor must be clean and free of all foreign materials or objects including, but not limited to, curing compounds and sealers.

I. Fill cracks, grooves, voids, depressions, and other minor imperfections. Follow the manufacturer's directions. Moveable joints must be treated utilizing specific transitioning joint devices depending upon the architect's recommendations. Follow current ASTM F710 guidelines for the preparation of concrete slabs to receive resilient flooring.

J. Refer to ACI 302.2R "Guidelines for Concrete Slabs that Receive Moisture-Sensitive Flooring Materials" for concrete design and construction.

K. Concrete slab shall be fortified with continual steel reinforcement. Fiber reinforcement alone shall not be considered adequate fortification.

1.6 *WARRANTY*

A. Special Limited Warranty:
   1. Manufacturer's standard form in which manufacturer agrees to repair or replace sports flooring including labor that fails within specified warranty period.

B. Material warranty must be direct from the product manufacturer.
   1. Material warranties from separate or third party insurance providers are not valid.
   2. Material warranties must come from original manufacturer or division thereof. Private label warranties from distributors or brokers are not valid. Supply original point of manufacturing upon request.

C. Failures include, but are not limited to, the following:
   1. Material manufacturing defects.
   2. Surface wear and deterioration to the point of wear-through of wear layer per ASTM F410/ASTM F1303.
   3. Failure due to substrate moisture exposure exceeding 80 percent relative humidity when tested according to ASTM F2170.

D. Warranty Period:
   1. For material defects and surface wear-through: **10** years from date of substantial completion.

E. Installer's Limited Warranty:
   1. Installer's standard form in which installer agrees to repair or replace sports flooring that fails due to poor workmanship or faulty installation within the specified warranty period.
   2. Warranty Period: 2 years from date of substantial completion.

1.7 *ADDITIONAL MATERIALS*

A. Furnish to the owner additional materials containing a total of at least 1% of each different color or design of the indoor resilient athletic surfacing used on the project.

1.8 *LEED™ CERTIFICATION*

A. The indoor resilient athletic surfacing should be able to help this facility to achieve points towards *LEED™ certification.* Flooring system must be certified by FloorScore.
B. LEED categories positively affected by the indoor resilient athletic surfacing:

LEED™ V4 Credit		Contribution
Materials & Resources: Building Product Disclosure & Optimization (BPDO)		
MRc3: Sourcing of Raw Materials	Options 1 & 2	2 Points
MRc4: Material Ingredients	Option 1	1 Point
MRc5: Construction and Demolition Management	Reclamation and Recycling	ReStart® Program
Indoor Environmental Quality		
EQc2: Low-Emitting Materials	TVOC: 0.5 mg/m3 or less	FloorScore®

PART 2 - PRODUCTS

2.1 *MANUFACTURERS*

A. The basis of the design for the indoor resilient multipurpose surfacing is Dancefloor and Inspiration Pro system as manufactured by Tarkett.
B. All other installation accessories and related components must be either made or approved by the indoor resilient athletic surfacing manufacturer.
C. Other products may be approved as equal if deemed qualified and submitted in accordance with the General Conditions.
D. Test reports confirming compliance from an independent sports laboratory must be provided along with samples, technical data, installation, maintenance, and warranty prior to acceptance as an alternative product.

2.2 *MATERIALS*

A. Dancefloor - Prefabricated sport surface 3.5 mm with solid color design and slightly textured embossed surface as supplied by Tarkett.
   1. Surface shall be a satin/matte finish.
   2. The Inspiration Pro System shall incorporate Inspiration Pro double tongue and grooved multi-ply engineered panels, force reduction cushion, and appropriate vapor retarder.

B. Physical properties of the indoor resilient athletic surfacing shall conform to the following minimums:

Width	—	6′ 6″ (2 m)
Length	—	75′ (23m)) approx.
Wear Layer	EN 429	0.65 mm
Total Thickness	EN 428/EN 429	3.5 mm
Total Combined Thickness		1 3/8″ (34.2 mm approx.)
Wear Layer	Type 1– Grade 1	ASTM F1303/F410
Weight	EN 430	3.3kg/m² (0.72 lbs./sq. ft.)
Force Reduction	ASTM F2772	52% +/-
Slip Resistance	AS 4586	P3
Reaction to Fire	ISO AS 9239-1	8.6 kW/m²
Chemical Resistance	ISO 26987/EN 423	High
Dimensional Stability	ISO 23999/EN 434	≤0.10%
Abrasion Resistance	EN 660: Part 2	Group T: ≤ 2.0mm³
Static Load Limit	PASSED	ASTM F970- Load 175 Lbs.
Phthalate-free technology	—	YES
REACH Compliant	—	YES
Heavy Metals	—	NO
ISO 9001	—	YES
ISO 14001	—	YES

1. Color: As available from the indoor resilient athletic surfacing manufacturer's standard range.
    a. Colors available: Solid Black or Solid Gray

C. Welding Rod: As supplied by the indoor resilient athletic surfacing manufacturer or supplier.
1. Color to blend with the indoor resilient athletic surfacing color or design.
2. All seams shall be welded to create a monolithic and impermeable surface.

D. Adhesive: As approved by the indoor resilient athletic surfacing manufacturer.

PART 3 - EXECUTION

3.1 *EXAMINATION*

A. It is the responsibility of the general contractor/construction manager to ensure that project/site conditions are acceptable for the installation of the indoor resilient athletic flooring.
B. Verify that the area in which the indoor resilient athletic surfacing will be installed is dry and weather tight. Verify that permanent heat, light and ventilation are installed and operable.
C. Verify that all other work that could cause damage, dirt and dust or interrupt the normal pace of the indoor resilient athletic flooring installation is completed or suspended.
D. Verify that there is a stable room temperature of at least 65◦F.
E. Verify that there are no foreign materials or objects on the subfloor and that the subfloor is clean and ready for installation.
F. *Concrete Subfloor: moisture content less than 85% RH when tested per ASTM F2170.*
G. Follow Fieldturf USA, Inc. installation recommendations.
H. Do not average the results of the tests. Report all field test results in writing to the General Contractor, Architect, and End User prior to installation.
I. Verify that the concrete subfloor surface pH level is within the 7 - 11 range.
J. Document the results confirming the slab is within manufacturer's tolerances for slab deviation.

3.2 *PREPARATION OF SURFACES*

A. Sand the entire surface of the concrete slab.
B. Sweep the concrete slab so as to remove all dirt and dust. If a sweeping compound is to be used it must be a sweeping compound that does not contain oil or other items that may inhibit the adhesive bond.
C. Slab must be dust free. In the event that dust impairs adhesive bond, priming the slab prior to application of adhesive may be necessary. Follow installation guidelines.
D. Follow OSHA guidelines.

3.3 *INSTALLATION*

A. The installation area shall be closed to all traffic and activity for a period to be set by the indoor resilient athletic surfacing installer. The indoor resilient athletic surfacing installation shall not begin until the installer is familiar with the existing conditions.
B. All necessary precautions should be taken to minimize noise, smell, dust, the use of hazardous materials and any other items that may inconvenience others.
C. Install the indoor resilient athletic surfacing in strict accordance with the indoor resilient athletic surfacing manufacturer's written instructions.
D. Install the indoor resilient athletic surfacing minimizing cross seams. Provide a seam diagram during the submittal process for approval prior to installation. Vinyl Sheet Flooring Seams: Comply with ASTM F 1516. Rout joints and heat weld to permanently and seamlessly fuse sections together.
E. Paint game lines using approved game line paint primer and game line paint in strict accordance with the game line paint manufacturer's instructions.
F. Install appropriate threshold plates or transition strips where necessary.

2.0 *CLEANING*

A. Remove all unused materials, tools, and equipment and dispose of any debris properly. Clean the indoor resilient athletic surfacing in accordance with the manufacturer's instructions.

3.6 *PROTECTION*

A. If required, protect the indoor resilient athletic surfacing from damage using coverings approved by the manufacturer until acceptance of work by the customer or their authorized representative.

3.7 *RELATED STANDARDS AND GUIDELINES*

A. ASTM F2170 "Standard Test Method for Determining Relative Humidity In Concrete Floor Slabs Using In-Situ Probes"
B. ASTM F710 "Standard Practice for Preparing Concrete Floors to Receive Resilient Flooring"
C. ACI 302.2R-06 "Guideline for Concrete Slabs that Receive Moisture-Sensitive Flooring Materials"
D. ASTM F2772-11 "Standard Specification for Athletic Performance Properties of Indoor Sports Floor Systems"

END OF SECTION

SECTION 09 65 66
ARCHITECTURAL SPECIFICATIONS FOR INDOOR RESILIENT ATHLETIC SURFACING

PART 1 – GENERAL

1.1 *SECTION INCLUDES*

A. Supply and installation of the indoor resilient multipurpose surfacing
B. Application of the game lines
C. References for the correct construction and preparation of concrete slabs to receive resilient flooring.

1.2 *SUBMITTALS*

A. Product Data:
Manufacturer's promotional brochures, specifications and installation instructions

B. Manufacturer Certifications:
1. Provide certification that accurately identifies the Original Equipment Manufacturer (OEM) of flooring furnished for this project including manufacturer's name, address and factory location.
2. Suppliers of private label flooring for this project must identify themselves as such and fully disclose the OEM information listed above.
3. All "manufacturer" requirements in these specifications must be complied with by the OEM, including warranties, certifications, qualifications, product data, test results, environmental requirements, performance data, etc.

B. Samples:
1. Submit for selection and approval three (3) sets of the indoor resilient multipurpose surfacing, manufacturer's brochures, samples or sample boards of all of the available colors, textures and styles.
2. Submit color samples of all the available game line paint colors for selection and approval.

C. Closeout Submittals:
1. Submit three (3) copies of the indoor resilient multipurpose surfacing and manufacturer's maintenance instructions.
2. Submit three (3) copies of the material and installation warranties as specified.

1.3 *QUALITY ASSURANCE*

A. Qualifications:
1. The indoor resilient multipurpose surfacing shall have been actively marketed for a minimum of ten (10) years.
2. The indoor resilient multipurpose surfacing shall be manufactured in an ISO 9001 certified plant.

3. The indoor resilient multipurpose surfacing shall be manufactured in an ISO 14001 certified plant.
4. The indoor resilient multipurpose surfacing supplier shall be an established firm, experienced in the field, and appointed as a distributor by the manufacturer of the indoor resilient multipurpose surfacing.
5. The installer of the indoor resilient multipurpose surfacing shall have a minimum of five (5) years' experience in the field installing indoor resilient multipurpose surfacing and have worked on at least five (5) projects of similar size, type and complexity.

B. Certifications:
1. Installer to submit the indoor resilient athletic surfacing manufacturer's certification attesting that they are an approved installer of the indoor resilient multipurpose surfacing.
2. The indoor resilient multipurpose surfacing manufacturer to submit official ISO 9001 certification for the facility in which the indoor resilient multipurpose surfacing is manufactured.
3. The indoor resilient multipurpose surfacing manufacturer to submit official ISO 14001 certification for the facility in which the indoor resilient multipurpose surfacing is manufactured.

C. Testing:
Tests shall be relative for multi-purpose use with certificates from independent testing resources to be made available upon request. Test results shall be no more than 5 years old and performed according to ASTM standard testing procedures.

1.4 *DELIVERY, STORAGE AND HANDLING*

A. Delivery:
Material shall not be delivered until all related work is in place and finished and/or proper storage facilities and conditions can be provided and guaranteed stable according to FieldTurf USA, Inc. recommendations.

B. Storage:
Store the material in a secure, clean and dry location. Maintain temperature between 55◦ and 85◦ Fahrenheit. Store the indoor resilient athletic surfacing rolls in an upright position on a smooth flat surface immediately upon delivery to jobsite. Rolls shipped in rigid protective cardboard containers can be laid horizontally prior to unpacking and installation.

1.5 *PROJECT/SITE CONDITIONS*

A. It is the responsibility of the general contractor/construction manager to maintain project/site conditions acceptable for the installation of the indoor resilient multipurpose flooring.

B. The area in which the indoor resilient multipurpose surfacing will be installed shall be dry and weather tight. Permanent heat, light and ventilation shall be installed and operable.
C. All other trades shall have completed their work prior to the installation of
the resilient athletic flooring. The general contractor or Construction Manager shall maintain a secure and clean working environment before, during and after the installation. Suspension of other trades' work may be
authorized providing their work will not damage the new flooring.
D. Maintain a stable room temperature of at least 65◦F for a minimum of one (1) week prior to, during and thereafter installation.
E. An effective low-permeance vapor barrier is placed directly beneath the concrete subfloor. For "on" or "below grade" installations, it is recommended to provide a permanent vapor barrier resistant to long term hydrostatic pressure/moisture exposure. Protrusions should be sealed to prevent moisture migration into the slab. Moisture should not be allowed to enter the slab after the completed construction.
F. Concrete subfloor surface pH level within the 7 to 10 range dependent upon installation type.
G. Concrete subfloor should be no greater than 1/8" within a 10 ft diameter. This tolerance can be measured in accordance with ASTM E1155.
A specified (F_F) of 50 and an (F_L) of 30 should reach this degree of floor flatness and floor level. There is no numerical correlation between F numbers and the deviation from the straight edge; however the above specified numbers should achieve a flat floor with minimal deviation in the slab. Reference ACI 117 and ACI 302.1R. The general contractor should provide a certificate of compliance with the above recommendations.
H. Concrete subfloor must be clean and free of all foreign materials or objects including, but not limited to, curing compounds and sealers.
I. Fill cracks, grooves, voids, depressions, and other minor imperfections. Follow the manufacturer's directions. Moveable joints must be treated utilizing specific liquid treatments designed for use with expansion/contraction joints. Standard cementitious floor patching compounds shall not be used for treating moving joints. (see ASTM F710)
J. Refer to ACI 302.2R "Guidelines for Concrete Slabs that Receive Moisture-Sensitive Flooring Materials" for concrete design and construction.
K. Concrete slab shall be fortified with continual steel reinforcement. Fiber reinforcement alone shall not be considered adequate fortification.

1.6 *WARRANTY*

A. Materials:

The indoor resilient multipurpose surfacing shall be covered by the manufacturer against product defects for 10 years. The manufacturer of the indoor resilient multipurpose surfacing must provide this warranty upon request. Warranties shall not be prorated during the life of the warranty period.

1.7 *ADDITIONAL MATERIALS*

Furnish to the owner additional materials containing a total of at least 1% of each different color or design of the indoor resilient athletic surfacing used on the project.

1.8 *LEED™ CERTIFICATION*

The indoor resilient athletic surfacing should be able to help this facility to achieve points towards *LEED™ certification.* Flooring system must be certified by Floor Score.

LEED categories positively affected by the indoor resilient athletic surfacing:

Product Type			Vinyl
Building Reuse Maintain Interior Nonstructural Elements	MR 1.2	Renovation	1
Construction Waste Management	MR 2	Renovation	2
Construction Waste Management Materials Reuse	MR 3 5 % - 1 point 10% - 2 points	Renovation	2
Recycled Content	MR 4 20% - 2 points	New/Renovation	2
Indoor Environmental Air Quality Low VOC Adhesives/Sealants	IEQ 4.1	New/Renovation	1
Low-emitting Materials Paints and Coatings	IEQ 4.2	New/Renovation	1
Low-Emitting Materials Flooring Systems	IEQ 4.3	New/Renovation	1

PART 2 - PRODUCTS

2.1 *MANUFACTURERS*

The basis of the design for the indoor resilient multipurpose surfacing is Omnisports Compact and Lumaflex System as manufactured by FieldTurf USA, Inc. All other installation accessories and related components must be either made or approved by the indoor resilient athletic surfacing

manufacturer. Other products may be approved as equal if deemed qualified and submitted in accordance with the General Conditions. Test reports confirming compliance from an Independent Sports Laboratory must be provided along with samples, technical data, installation, maintenance, and warranty prior to acceptance as an alternative product.

2.2 *MATERIALS*.

LinoSport - Prefabricated 2.5 mm linoleum surfacing with marbled design and slightly textured surface as supplied by FieldTurf USA, Inc. Product to be naturally bacteriostatic and will not contribute to the proliferation of bacteria or fungus. The material's surface shall be protected with XF® X-treme performance finish or equivalent for ease of maintenance. Floor covering requiring waxes or other restorative treatments shall not be considered. Welding rod shall also incorporate the XF® X-treme finish or equivalent.
The Lumaflex System shall incorporate Lumaflex double tongue and grooved multi-ply engineered panels, force reduction cushion, and appropriate vapor retarder. Physical properties of the indoor athletic system shall conform to the following minimums:

LinoSport Width	.....	6'6" (2 m)
Length	.....	Varies
LinoSport Thickness	.....	2.5 mm
Total Combination Thickness	.....	1.063" (27 mm approx.)
LinoSport Environmental	.....	Floor Score Certified
Ball Rebound	PASSED	ASTM F2772 > 90%
Surface Finish Effect	PASSED	ASTM F2772
Vertical Deformation	PASSED	ASTM F2772
Shock Absorption	PASSED	ASTM F2772 Class 4
LinoSport Fire Rating	PASSED	Class 1 (ASTM E648)

1. Color: As available from the indoor resilient athletic surfacing manufacturer's standard range.

B. Welding Rod:
As supplied by the indoor resilient athletic surfacing manufacturer or supplier. Color to blend with the indoor resilient athletic surfacing color or design. All seams shall be welded to create a monolithic and impermeable surface.

C. Adhesive:
As approved by the indoor resilient athletic surfacing manufacturer.

D. Game Line Paint Primer:
As approved by the indoor resilient athletic surfacing manufacturer.

E. Game Line Paint:
As approved by the indoor resilient athletic surfacing manufacturer. Colors are to be selected from the manufacturer's standard range.

PART 3 - EXECUTION

3.1 *EXAMINATION*

A. It is the responsibility of the general contractor/construction manager to ensure that project/site conditions are acceptable for the installation of the indoor resilient athletic flooring.
B. Verify that the area in which the indoor resilient athletic surfacing will be installed is dry and weather tight. Verify that permanent heat, light and ventilation is installed and operable.
C. Verify that all other work that could cause damage, dirt and dust or interrupt the normal pace of the indoor resilient athletic flooring installation is completed or suspended.
D. Verify that there is a stable room temperature of at least 65◦F.
E. Verify that there are no foreign materials or objects on the subfloor and that the subfloor is clean and ready for installation.
F. Concrete moisture content less than 85 % RH when tested per ASTM F2170.
G. Document the results indicating the slab is within manufacturer's tolerances for slab deviation.

3.2 *PREPARATION OF SURFACES*

A. Sand the entire surface of the concrete slab.
B. Sweep the concrete slab so as to remove all dirt and dust. If a sweeping compound is to be used it must be a sweeping compound that does not contain oil or other items that may inhibit the adhesive bond.
C. Slab must be dust free. In the event that dust impairs adhesive bond, priming the slab prior to application of adhesive may be necessary. Follow installation guidelines.

3.3 *INSTALLATION*

A. The installation area shall be closed to all traffic and activity for a period to be set by the indoor resilient athletic surfacing installer. The indoor resilient athletic surfacing installation shall not begin until the installer is familiar with the existing conditions.
B. All necessary precautions should be taken to minimize noise, smell, dust, the use of hazardous materials and any other items that may inconvenience others.

C. Install the indoor resilient athletic surfacing in strict accordance with the indoor resilient athletic surfacing manufacturer's written instructions.
D. Install the indoor resilient athletic surfacing minimizing cross seams. Provide
a seam diagram during the submittal process for approval prior to installation.
E. Paint game lines using approved game line paint primer and game line paint in strict accordance with the game line paint manufacturer's instructions.
F. Install appropriate threshold plates or transition strips where necessary.

3.4 *CLEANING*

A. Remove all unused materials, tools, and equipment and dispose of any debris properly. Clean the indoor resilient athletic surfacing in accordance with the manufacturer's instructions.

3.5 *PROTECTION*

If required, protect the indoor resilient athletic surfacing from damage using coverings approved by the manufacturer until acceptance of work by the customer or their authorized representative.

3.7 *RELATED STANDARDS AND GUIDELINES*

A. ASTM F2170 "Standard Test Method for Determining Relative Humidity
In Concrete Floor Slabs Using In-Situ Probes"
B. ASTM F710 "Standard Practice for Preparing Concrete Floors to Receive
Resilient Flooring"
C. ACI 302.2R-06 "Guideline for Concrete Slabs that Receive Moisture-Sensitive
Flooring Materials"

END OF SECTION

SECTION 09645
ARCHITECTURAL SPECIFICATIONS FOR INDOOR RESILIENT SURFACING

PART 1 – GENERAL

1.1 *SECTION INCLUDES*

A. Supply and installation of the indoor resilient multipurpose surfacing
B. Application of the game lines
C. References for the correct construction and preparation of concrete slabs to receive resilient flooring.

1.2 *SUBMITTALS*

A. Product Data:
Manufacturer's promotional brochures, specifications and installation instructions

B. Manufacturer Certifications:
1. Provide certification that accurately identifies the Original Equipment Manufacturer (OEM) of flooring furnished for this project including manufacturer's name, address and factory location.
2. Suppliers of private label flooring for this project must identify themselves as such and fully disclose the OEM information listed above.
3. All "manufacturer" requirements in these specifications must be complied with by the OEM, including warranties, certifications, qualifications, product data, test results, environmental requirements, performance data, etc.

B. Samples:
1. Submit for selection and approval three (3) sets of the indoor resilient multipurpose surfacing, manufacturer's brochures, samples or sample boards of all of the available colors, textures and styles.
2. Submit color samples of all the available game line paint colors for selection and approval.

C. Closeout Submittals:
1. Submit three (3) copies of the indoor resilient multipurpose surfacing and manufacturer's maintenance instructions.
2. Submit three (3) copies of the material and installation warranties as specified.

1.3 *QUALITY ASSURANCE*

A. Qualifications:

1. The indoor resilient multipurpose surfacing shall be manufactured in an ISO 9001 certified plant.
2. The indoor resilient multipurpose surfacing shall be manufactured in an ISO 14001 certified plant.
3. The indoor resilient multipurpose surfacing supplier shall be an established firm experienced in the field and appointed as a distributor by the manufacturer of the indoor resilient multipurpose surfacing.

4. The installer of the indoor resilient multipurpose surfacing shall have a minimum of five (5) years experience in the field installing indoor resilient multipurpose surfacing and have worked on at least five (5) projects of similar size and complexity.

B. Certifications:
1. Installer to submit the indoor resilient surfacing manufacturer's or distributor's certification attesting that they are an approved installer of the indoor resilient multipurpose surfacing.
2. The indoor resilient multipurpose surfacing manufacturer to submit official ISO 9001 certification for the facility in which the indoor resilient multipurpose surfacing is manufactured.
3. The indoor resilient multipurpose surfacing manufacturer to submit official ISO 14001 certification for the facility in which the indoor resilient multipurpose surfacing is manufactured.

C. Testing:
Tests shall be relative for multi-purpose use with certificates from independent testing resources to be made available upon request. Test results shall be no more than 5 years old and performed according to ASTM and/or EN standard testing procedures.

1.4 *DELIVERY, STORAGE AND HANDLING*

A. Delivery:
Material shall not be delivered until all related work is in place and finished and/or proper storage facilities and conditions can be provided and guaranteed stable according to the manufacturer's recommendations.

1.5 *PROJECT/SITE CONDITIONS*

A. It is the responsibility of the general contractor/construction manager to maintain project/site conditions acceptable for the installation of the indoor resilient multipurpose flooring.
B. The area in which the indoor resilient multipurpose surfacing will be installed shall be dry and weather tight. Permanent heat, light and ventilation shall be installed and operable.
C. All other trades shall have completed their work prior to the installation of the resilient multipurpose flooring. The general contractor or Construction Manager shall maintain a secure and clean working environment before, during and after the installation. Suspension of other trades' work may be authorized providing their work will not damage the new flooring.
D. Maintain a stable room temperature of at least 65°F for a minimum of one (1) week prior to, during, and thereafter installation.
E. An effective low-permeance vapor barrier is placed directly beneath the concrete subfloor. For "on" or "below grade" installations, it is recommended to provide a permanent vapor barrier resistant to long term hydrostatic pressure/moisture exposure. Protrusions should be sealed to prevent moisture migration into the slab. Moisture should not be allowed to enter the slab after the completed construction.

F. Concrete subfloor surface pH level within the 7 to 10 range dependent upon installation type.
G. Concrete subfloor should be no greater than 1/8" within a 10 ft diameter. This tolerance can be measured in accordance with ASTM E1155.
A specified (F_F) of 50 and an (F_L) of 30 should reach this degree of floor flatness and floor level. There is no numerical correlation between F numbers and the deviation from the straight edge; however the above specified numbers should achieve a flat floor with minimal deviation in the slab. Reference ACI 117 and ACI 302.1R. The general contractor should provide a certificate of compliance with the above recommendations.
H. Concrete subfloor must be clean and free of all foreign materials or objects including, but not limited to, curing compounds and sealers.
I. Fill cracks, grooves, voids, depressions, and other minor imperfections with Ardex (or equal) cement-based patching/leveling compounds. Follow the manufacturer's directions. Moveable joints must be treated utilizing specific transitioning joint devices depending upon the architect's recommendations. Follow current ASTM F710 guidelines for the preparation of concrete slabs to receive resilient flooring.
J. Refer to ACI 302.2R "Guidelines for Concrete Slabs that Receive Moisture-Sensitive Flooring Materials" for concrete design and construction.
K. Concrete slab shall be fortified with continual steel reinforcement. Fiber reinforcement alone shall not be considered adequate fortification.

1.6 *WARRANTY*

A. Materials:
The indoor resilient multipurpose surfacing shall be covered by the manufacturer against product defects for 10 years. The manufacturer of the indoor resilient multipurpose surfacing must provide this warranty upon request.
B. Installation:
The installation of the indoor resilient multipurpose surfacing shall be covered against poor workmanship and faulty installation by a two (2) year written, limited warranty provided by the contractor performing/overseeing the installation.

1.7 *ADDITIONAL MATERIALS*

Furnish to the owner additional materials containing a total of at least 1% of each different color or design of the indoor resilient multipurpose surfacing used on the project.

1.8 *LEED™ CERTIFICATION*

The indoor resilient athletic surfacing should be able to help this facility to achieve points towards *LEED*™ certification. Flooring system must be certified by FloorScore.

Product Type			Linoleum Flooring
Building Reuse Maintain Interior Nonstructural Elements	MR 1.2	Renovation	1
Construction Waste Management	MR 2	Renovation	2
Recycled Content	MR 4 20% - 2 points	New/Renovation	2
Materials and Resources Rapidly Renewable Materials	MR 6	New/Renovation	1
Indoor Environmental Air Quality Low VOC Adhesives/Sealants	IEQ 4.1	New/Renovation	1
Low-emitting Materials Paints and Coatings	IEQ 4.2	New/Renovation	1
Low-Emitting Materials Flooring Systems	IEQ 4.3	New/Renovation	1

PART 2 - PRODUCTS

2.1 *MANUFACTURERS*

The basis of the design for the indoor resilient multipurpose surfacing is LinoSport as manufactured by FieldTurf, USA, Inc. All other installation accessories and related components must be either made or approved by the indoor resilient surfacing manufacturer. Other products may be approved as equal if deemed qualified and submitted in accordance with the General Conditions..

2.2 *MATERIALS.*

LinoSport - Prefabricated 2.5 mm linoleum surfacing with marbled design and slightly textured surface as supplied by FieldTurf USA, Inc. Product to be naturally bacteriostatic and will not contribute to the proliferation of bacteria or fungus. The material's surface shall be protected with XF® X-treme performance finish or equivalent for ease of maintenance. Floor covering requiring waxes or other restorative treatments shall not be considered. Welding rod shall also incorporate the XF® X-treme finish or equivalent.

1. Physical properties of the indoor resilient surfacing shall conform to the following minimums:

Width	…….	6'6" (2 m)
Length	…….	85' (25.9m) approx.
Total Thickness	…….	2.5 mm
Vertical Deformation	PASSED	0.6 (EN 14809)
Rolling Load	PASSED	0.30 (EN 1569 {11/1999})
Friction	PASSED	83 (EN 13036-4)
Sanitization	Excellent	Naturally Bacteriostatic
Sound Insulation	Excellent	+/= 9 dB (ISO 717/2)
Recycled Content	…….	22%

A. Welding Rod:

As supplied by the indoor resilient surfacing manufacturer or supplier. Color to blend with the indoor resilient surfacing color or design. All seams

shall be heat welded. Welding rod shall also incorporate the XF® X-treme finish or equivalent.

B. Adhesive:
Multi-Poxy adhesive. Follow adhesive manufacturer's recommendations.

C. Game Line Paint Primer:
As approved by the indoor resilient surfacing manufacturer.

D. Color: As available from the indoor resilient surfacing manufacturer's standard range.

PART 3 - EXECUTION

3.1 *EXAMINATION*

A. It is the responsibility of the general contractor/construction manager to ensure that project/site conditions are acceptable for the installation of the indoor resilient flooring.

B. Verify that the area in which the indoor resilient surfacing will be installed is dry and weather tight. Verify that permanent heat, light and ventilation is installed and operable.

C. Verify that all other work that could cause damage, dirt and dust or interrupt the normal pace of the indoor resilient flooring installation is completed or suspended.

D. Verify that there is a stable room temperature of at least 65°F.

E. Verify that there are no foreign materials or objects on the subfloor and that the subfloor is clean and ready for installation.

F. *Direct Full Spread Adhering to Concrete Subfloor* ***Multi-Poxy Adhesive****:*
moisture content less 92 % RH when tested per ASTM F2170.

G. Do not average the results of the tests. Report all field test results in writing to the General Contractor, Architect, and End User prior to installation.

H. Verify that the concrete subfloor surface pH level is within the 7 - 10 range.

I. Document the results indicating the slab is within manufacturer's tolerances for slab deviation.

3.2 *PREPARATION OF SURFACES*

A. Sand the entire surface of the concrete slab.

B. Sweep the concrete slab so as to remove all dirt and dust. If a sweeping compound is to be used it must be a sweeping compound that does not contain oil or other items that may inhibit the adhesive bond.

C. Slab must be dust free. In the event that dust impairs adhesive bond, priming the slab prior to application of adhesive may be necessary. Follow installation guidelines.

3.3 *INSTALLATION*

A. The installation area shall be closed to all traffic and activity for a period to be set by the indoor resilient surfacing installer. The indoor resilient

surfacing installation shall not begin until the installer is familiar with the existing conditions.

B. All necessary precautions should be taken to minimize noise, smell, dust, the use of hazardous materials and any other items that may inconvenience others.
C. Install the indoor resilient surfacing in strict accordance with the indoor resilient surfacing manufacturer's written instructions.
D. Install the indoor resilient surfacing minimizing cross seams. Provide a seam diagram during the submittal process for approval prior to installation.
E. Paint game lines using approved game line paint primer and game line paint in strict accordance with the game line paint manufacturer's instructions.
F. Install appropriate threshold plates or transition strips where necessary.

3.5 *CLEANING*

A. Remove all unused materials, tools, and equipment and dispose of any debris properly. Clean the indoor resilient surfacing in accordance with the manufacturer's instructions.

3.6 *PROTECTION*

If required, protect the indoor resilient surfacing from damage using coverings approved by the manufacturer until acceptance of work by the customer or their authorized representative.

3.7 *RELATED STANDARDS AND GUIDELINES*

A. ASTM F2170 "Standard Test Method for Determining Relative Humidity In Concrete Floor Slabs Using In-Situ Probes"
B. ASTM F710 "Standard Practice for Preparing Concrete Floors to Receive Resilient Flooring"
C. ACI 302.2R-06 "Guideline for Concrete Slabs that Receive Moisture-Sensitive Flooring Materials"

END OF SECTION

SECTION 09 65 66
ARCHITECTURAL SPECIFICATIONS FOR INDOOR RESILIENT ATHLETIC SURFACING

PART 1 – GENERAL

1.1 *SECTION INCLUDES*

A. Supply and installation of the indoor resilient multipurpose surfacing
B. Application of the game lines
C. References for the correct construction and preparation of concrete slabs to receive resilient flooring.

1.2 *SUBMITTALS*

A. Product Data:
Manufacturer's promotional brochures, specifications and installation instructions

B. Manufacturer Certifications:
1. Provide certification that accurately identifies the Original Equipment Manufacturer (OEM) of flooring furnished for this project including manufacturer's name, address and factory location.
2. Suppliers of private label flooring for this project must identify themselves as such and fully disclose the OEM information listed above.
3. All "manufacturer" requirements in these specifications must be complied with by the OEM, including warranties, certifications, qualifications, product data, test results, environmental requirements, performance data, etc.

B. Samples:
1. Submit for selection and approval three (3) sets of the indoor resilient multipurpose surfacing, manufacturer's brochures, samples or sample boards of all of the available colors, textures and styles.
2. Submit color samples of all the available game line paint colors for selection and approval.

C. Closeout Submittals:
1. Submit three (3) copies of the indoor resilient multipurpose surfacing and manufacturer's maintenance instructions.
2. Submit three (3) copies of the material and installation warranties as specified.

1.3 *QUALITY ASSURANCE*

A. Qualifications:
1. The indoor resilient multipurpose surfacing shall have been actively marketed for a minimum of ten (10) years.
2. The indoor resilient multipurpose surfacing shall be manufactured in an ISO 9001 certified plant.

3. The indoor resilient multipurpose surfacing shall be manufactured in an ISO 14001 certified plant.
4. The indoor resilient multipurpose surfacing supplier shall be an established firm, experienced in the field, and appointed as a distributor by the manufacturer of the indoor resilient multipurpose surfacing.
5. The installer of the indoor resilient multipurpose surfacing shall have a minimum of five (5) years' experience in the field installing indoor resilient multipurpose surfacing and have worked on at least five (5) projects of similar size, type and complexity.

B. Certifications:
1. Installer to submit the indoor resilient athletic surfacing manufacturer's certification attesting that they are an approved installer of the indoor resilient multipurpose surfacing.
2. The indoor resilient multipurpose surfacing manufacturer to submit official ISO 9001 certification for the facility in which the indoor resilient multipurpose surfacing is manufactured.
3. The indoor resilient multipurpose surfacing manufacturer to submit official ISO 14001 certification for the facility in which the indoor resilient multipurpose surfacing is manufactured.

C. Testing:
Tests shall be relative for multi-purpose use with certificates from independent testing resources to be made available upon request. Test results shall be no more than 5 years old and performed according to ASTM standard testing procedures.

1.4 *DELIVERY, STORAGE AND HANDLING*

A. Delivery:
Material shall not be delivered until all related work is in place and finished and/or proper storage facilities and conditions can be provided and guaranteed stable according to FieldTurf USA, Inc. recommendations.

B. Storage:
Store the material in a secure, clean and dry location. Maintain temperature between 55◦ and 85◦ Fahrenheit. Store the indoor resilient athletic surfacing rolls in an upright position on a smooth flat surface immediately upon delivery to jobsite. Rolls shipped in rigid protective cardboard containers can be laid horizontally prior to unpacking and installation.

1.5 *PROJECT/SITE CONDITIONS*

A. It is the responsibility of the general contractor/construction manager to maintain project/site conditions acceptable for the installation of the indoor resilient multipurpose flooring.

B. The area in which the indoor resilient multipurpose surfacing will be installed shall be dry and weather tight. Permanent heat, light and ventilation shall be installed and operable.
C. All other trades shall have completed their work prior to the installation of
the resilient athletic flooring. The general contractor or Construction Manager shall maintain a secure and clean working environment before, during and after the installation. Suspension of other trades' work may be
authorized providing their work will not damage the new flooring.
D. Maintain a stable room temperature of at least 65◦F for a minimum of one (1) week prior to, during and thereafter installation.
E. An effective low-permeance vapor barrier is placed directly beneath the concrete subfloor. For "on" or "below grade" installations, it is recommended to provide a permanent vapor barrier resistant to long term hydrostatic pressure/moisture exposure. Protrusions should be sealed to prevent moisture migration into the slab. Moisture should not be allowed to enter the slab after the completed construction.
F. Concrete subfloor surface pH level within the 7 to 10 range dependent upon installation type.
G. Concrete subfloor should be no greater than 1/8" within a 10 ft diameter. This tolerance can be measured in accordance with ASTM E1155.
A specified (F_F) of 50 and an (F_L) of 30 should reach this degree of floor flatness and floor level. There is no numerical correlation between F numbers and the deviation from the straight edge; however the above specified numbers should achieve a flat floor with minimal deviation in the slab. Reference ACI 117 and ACI 302.1R. The general contractor should provide a certificate of compliance with the above recommendations.
H. Concrete subfloor must be clean and free of all foreign materials or objects including, but not limited to, curing compounds and sealers.
I. Fill cracks, grooves, voids, depressions, and other minor imperfections. Follow the manufacturer's directions. Moveable joints must be treated utilizing specific liquid treatments designed for use with expansion/contraction joints. Standard cementitious floor patching compounds shall not be used for treating moving joints. (see ASTM F710)
J. Refer to ACI 302.2R "Guidelines for Concrete Slabs that Receive Moisture-Sensitive Flooring Materials" for concrete design and construction.
K. Concrete slab shall be fortified with continual steel reinforcement. Fiber reinforcement alone shall not be considered adequate fortification.

1.6 *WARRANTY*

A. Materials:

B. The indoor resilient multipurpose surfacing shall be covered by the manufacturer against product defects for 10 years. The manufacturer of the indoor resilient multipurpose surfacing must provide this warranty upon request. Warranties shall not be prorated during the life of the warranty period.

1.7 *ADDITIONAL MATERIALS*

Furnish to the owner additional materials containing a total of at least 1% of each different color or design of the indoor resilient athletic surfacing used on the project.

1.8 *LEED™ CERTIFICATION*

The indoor resilient athletic surfacing should be able to help this facility to achieve points towards *LEED™ certification.* Flooring system must be certified by Floor Score.

LEED categories positively affected by the indoor resilient athletic surfacing:

Product Type			Vinyl
Building Reuse Maintain Interior Nonstructural Elements	**MR 1.2**	Renovation	1
Construction Waste Management	**MR 2**	Renovation	2
Construction Waste Management Materials Reuse	**MR 3**	Renovation	2
	5 % - 1 point		
	10% - 2 points		
Recycled Content	**MR 4**	New/Renovation	2
	20% - 2 points		
Indoor Environmental Air Quality Low VOC Adhesives/Sealants	**IEQ 4.1**	New/Renovation	1
Low-emitting Materials Paints and Coatings	**IEQ 4.2**	New/Renovation	1
Low-Emitting Materials Flooring Systems	**IEQ 4.3**	New/Renovation	1

PART 2 - PRODUCTS

2.1 *MANUFACTURERS*

The basis of the design for the indoor resilient multipurpose surfacing is Omnisports Compact and Lumaflex Elite System as manufactured by FieldTurf USA, Inc. All other installation accessories and related components must be either made or approved by the indoor resilient

athletic surfacing manufacturer. Other products may be approved as equal if deemed qualified and submitted in accordance with the General Conditions. Test reports confirming compliance from an Independent Sports Laboratory must be provided along with samples, technical data, installation, maintenance, and warranty prior to acceptance as an alternative product.

2.2 *MATERIALS*.

LinoSport- Prefabricated 2.5 mm linoleum surfacing with marbled design and slightly textured surface as supplied by FieldTurf USA, Inc. Product to be naturally bacteriostatic and will not contribute to the proliferation of bacteria or fungus. The material's surface shall be protected with XF® X-treme performance finish or equivalent for ease of maintenance. Floor covering requiring waxes or other restorative treatments shall not be considered. Welding rod shall also incorporate the XF® X-treme finish or equivalent.
The Lumaflex Elite System shall incorporate Lumaflex Elite double tongue and grooved multi-ply engineered panels, force reduction cushion, and appropriate vapor retarder. Physical properties of the indoor athletic system shall conform to the following minimums:

LinoSport Width	.....	6'6" (2 m)
Length	.....	Varies
LinoSport Thickness	.....	2.5 mm
Total Combination Thickness	.....	1.063" (27mm approx.)
LinoSport Environmental	.....	Floor Score Certified
Ball Rebound	PASSED	ASTM F2772 > 90%
Surface Finish Effect	PASSED	ASTM F2772
Vertical Deformation	PASSED	ASTM F2772
Shock Absorption	PASSED	ASTM F2772 Class 5
LinoSport Fire Rating	PASSED	Class 1 (ASTM E648)

1. Color: As available from the indoor resilient athletic surfacing manufacturer's standard range.

B. Welding Rod:
As supplied by the indoor resilient athletic surfacing manufacturer or supplier. Color to blend with the indoor resilient athletic surfacing color or design. All seams shall be welded to create a monolithic and impermeable surface.

C. Adhesive:
As approved by the indoor resilient athletic surfacing manufacturer.

D. Game Line Paint Primer:

As approved by the indoor resilient athletic surfacing manufacturer.

E. Game Line Paint:
As approved by the indoor resilient athletic surfacing manufacturer. Colors are to be selected from the manufacturer's standard range.

PART 3 - EXECUTION

3.1 *EXAMINATION*

A. It is the responsibility of the general contractor/construction manager to ensure that project/site conditions are acceptable for the installation of the indoor resilient athletic flooring.
B. Verify that the area in which the indoor resilient athletic surfacing will be installed is dry and weather tight. Verify that permanent heat, light and ventilation is installed and operable.
C. Verify that all other work that could cause damage, dirt and dust or interrupt the normal pace of the indoor resilient athletic flooring installation is completed or suspended.
D. Verify that there is a stable room temperature of at least 65◦F.
E. Verify that there are no foreign materials or objects on the subfloor and that the subfloor is clean and ready for installation.
F. Concrete moisture content less than 85 % RH when tested per ASTM F2170.
G. Document the results indicating the slab is within manufacturer's tolerances for slab deviation.

3.2 *PREPARATION OF SURFACES*

A. Sand the entire surface of the concrete slab.
B. Sweep the concrete slab so as to remove all dirt and dust. If a sweeping compound is to be used it must be a sweeping compound that does not contain oil or other items that may inhibit the adhesive bond.
C. Slab must be dust free. In the event that dust impairs adhesive bond, priming the slab prior to application of adhesive may be necessary. Follow installation guidelines.

3.3 *INSTALLATION*

A. The installation area shall be closed to all traffic and activity for a period to be set by the indoor resilient athletic surfacing installer. The indoor resilient athletic surfacing installation shall not begin until the installer is familiar with the existing conditions.
B. All necessary precautions should be taken to minimize noise, smell, dust, the use of hazardous materials and any other items that may inconvenience others.

C. Install the indoor resilient athletic surfacing in strict accordance with the indoor resilient athletic surfacing manufacturer's written instructions.
D. Install the indoor resilient athletic surfacing minimizing cross seams. Provide
a seam diagram during the submittal process for approval prior to installation.
E. Paint game lines using approved game line paint primer and game line paint in strict accordance with the game line paint manufacturer's instructions.
F. Install appropriate threshold plates or transition strips where necessary.

3.4 *CLEANING*

A. Remove all unused materials, tools, and equipment and dispose of any debris properly. Clean the indoor resilient athletic surfacing in accordance with the manufacturer's instructions.

3.5 *PROTECTION*

If required, protect the indoor resilient athletic surfacing from damage using coverings approved by the manufacturer until acceptance of work by the customer or their authorized representative.

3.7 *RELATED STANDARDS AND GUIDELINES*

A. ASTM F2170 "Standard Test Method for Determining Relative Humidity
In Concrete Floor Slabs Using In-Situ Probes"
B. ASTM F710 "Standard Practice for Preparing Concrete Floors to Receive
Resilient Flooring"
C. ACI 302.2R-06 "Guideline for Concrete Slabs that Receive Moisture-Sensitive
Flooring Materials"

END OF SECTION

SECTION 09645
ARCHITECTURAL SPECIFICATIONS FOR INDOOR RESILIENT SURFACING

PART 1 – GENERAL

1.1 *SECTION INCLUDES*

A. Supply and installation of the indoor resilient multipurpose surfacing
B. Application of the game lines
C. References for the correct construction and preparation of concrete slabs to receive resilient flooring.

1.2 *SUBMITTALS*

A. Product Data:
Manufacturer's promotional brochures, specifications and installation instructions

B. Manufacturer Certifications:
1. Provide certification that accurately identifies the Original Equipment Manufacturer (OEM) of flooring furnished for this project including manufacturer's name, address and factory location.
2. Suppliers of private label flooring for this project must identify themselves as such and fully disclose the OEM information listed above.
3. All "manufacturer" requirements in these specifications must be complied with by the OEM, including warranties, certifications, qualifications, product data, test results, environmental requirements, performance data, etc.

B. Samples:
1. Submit for selection and approval three (3) sets of the indoor resilient multipurpose surfacing, manufacturer's brochures, samples or sample boards of all of the available colors, textures and styles.
2. Submit color samples of all the available game line paint colors for selection and approval.

C. Closeout Submittals:
1. Submit three (3) copies of the indoor resilient multipurpose surfacing and manufacturer's maintenance instructions.
2. Submit three (3) copies of the material and installation warranties as specified.

1.3 *QUALITY ASSURANCE*

A. Qualifications:

1. The indoor resilient multipurpose surfacing shall be manufactured in an ISO 9001 certified plant.
2. The indoor resilient multipurpose surfacing shall be manufactured in an ISO 14001 certified plant.
3. The indoor resilient multipurpose surfacing supplier shall be an established firm experienced in the field and appointed as a distributor by the manufacturer of the indoor resilient multipurpose surfacing.
4. The installer of the indoor resilient multipurpose surfacing shall have a minimum of five (5) years experience in the field installing indoor

resilient multipurpose surfacing and have worked on at least five (5) projects of similar size and complexity.

B. Certifications:
   1. Installer to submit the indoor resilient surfacing manufacturer's or distributor's certification attesting that they are an approved installer of the indoor resilient multipurpose surfacing.
   2. The indoor resilient multipurpose surfacing manufacturer to submit official ISO 9001 certification for the facility in which the indoor resilient multipurpose surfacing is manufactured.
   3. The indoor resilient multipurpose surfacing manufacturer to submit official ISO 14001 certification for the facility in which the indoor resilient multipurpose surfacing is manufactured.

C. Testing:
   Tests shall be relative for multi-purpose use with certificates from independent testing resources to be made available upon request. Test results shall be no more than 5 years old and performed according to ASTM and/or EN standard testing procedures.

1.4 *DELIVERY, STORAGE AND HANDLING*

A. Delivery:
   Material shall not be delivered until all related work is in place and finished and/or proper storage facilities and conditions can be provided and guaranteed stable according to the manufacturer's recommendations.

1.5 *PROJECT/SITE CONDITIONS*

A. It is the responsibility of the general contractor/construction manager to maintain project/site conditions acceptable for the installation of the indoor resilient multipurpose flooring.
B. The area in which the indoor resilient multipurpose surfacing will be installed shall be dry and weather tight. Permanent heat, light and ventilation shall be installed and operable.
C. All other trades shall have completed their work prior to the installation of the resilient multipurpose flooring. The general contractor or Construction Manager shall maintain a secure and clean working environment before, during and after the installation. Suspension of other trades' work may be authorized providing their work will not damage the new flooring.
D. Maintain a stable room temperature of at least 65°F for a minimum of one (1) week prior to, during, and thereafter installation.
E. An effective low-permeance vapor barrier is placed directly beneath the concrete subfloor. For "on" or "below grade" installations, it is recommended to provide a permanent vapor barrier resistant to long term hydrostatic pressure/moisture exposure. Protrusions should be sealed to prevent moisture migration into the slab. Moisture should not be allowed to enter the slab after the completed construction.
F. Concrete subfloor surface pH level within the 7 to 10 range dependent upon installation type.
G. Concrete subfloor should be no greater than 1/8" within a 10 ft diameter. This tolerance can be measured in accordance with ASTM E1155.

A specified (F_F) of 50 and an (F_L) of 30 should reach this degree of floor flatness and floor level. There is no numerical correlation between F numbers and the deviation from the straight edge; however the above specified numbers should achieve a flat floor with minimal deviation in the slab. Reference ACI 117 and ACI 302.1R. The general contractor should provide a certificate of compliance with the above recommendations.

H. Concrete subfloor must be clean and free of all foreign materials or objects including, but not limited to, curing compounds and sealers.

I. Fill cracks, grooves, voids, depressions, and other minor imperfections with Ardex (or equal) cement-based patching/leveling compounds. Follow the manufacturer's directions. Moveable joints must be treated utilizing specific transitioning joint devices depending upon the architect's recommendations. Follow current ASTM F710 guidelines for the preparation of concrete slabs to receive resilient flooring.

J. Refer to ACI 302.2R "Guidelines for Concrete Slabs that Receive Moisture-Sensitive Flooring Materials" for concrete design and construction.

K. Concrete slab shall be fortified with continual steel reinforcement. Fiber reinforcement alone shall not be considered adequate fortification.

1.6 *WARRANTY*

A. Materials:
The indoor resilient multipurpose surfacing shall be covered by the manufacturer against product defects for 10 years. The manufacturer of the indoor resilient multipurpose surfacing must provide this warranty upon request.

B. Installation:
The installation of the indoor resilient multipurpose surfacing shall be covered against poor workmanship and faulty installation by a two (2) year written, limited warranty provided by the contractor performing/overseeing the installation.

1.7 *ADDITIONAL MATERIALS*

Furnish to the owner additional materials containing a total of at least 1% of each different color or design of the indoor resilient multipurpose surfacing used on the project.

1.8 *LEED™ CERTIFICATION*

The indoor resilient athletic surfacing should be able to help this facility to achieve points towards *LEED™* certification. Flooring system must be certified by FloorScore.

Product Type			Linoleum Flooring
Building Reuse Maintain Interior Nonstructural Elements	**MR 1.2**	Renovation	1
Construction Waste Management	**MR 2**	Renovation	2
Recycled Content	**MR 4** **20% - 2 points**	New/Renovation	2
Materials and Resources Rapidly Renewable Materials	**MR 6**	New/Renovation	1

Indoor Environmental Air Quality Low VOC Adhesives/Sealants	**IEQ 4.1**	New/Renovation	1
Low-emitting Materials Paints and Coatings	**IEQ 4.2**	New/Renovation	1
Low-Emitting Materials Flooring Systems	**IEQ 4.3**	New/Renovation	1

PART 2 - PRODUCTS

2.1 *MANUFACTURERS*

The basis of the design for the indoor resilient multipurpose surfacing is LinoSport as manufactured by FieldTurf, USA, Inc. All other installation accessories and related components must be either made or approved by the indoor resilient surfacing manufacturer. Other products may be approved as equal if deemed qualified and submitted in accordance with the General Conditions..

2.2 *MATERIALS.*

LinoSport - Prefabricated 4.6 mm foam backed linoleum sports surfacing with marbled design and slightly textured surface as supplied by FieldTurf USA, Inc. Product to be naturally bacteriostatic and will not contribute to the proliferation of bacteria or fungus. The material's surface shall be protected with XF® X-treme performance finish or equivalent for ease of maintenance. Floor covering requiring waxes or other restorative treatments shall not be considered. Welding rod shall also incorporate the XF® X-treme finish or equivalent.

1. Physical properties of the indoor resilient athletic surfacing shall conform to the following minimums:

Width	…….	6'6" (2 m)
Length	…….	85' (25.9m) approx.
Total Thickness	…….	4.6 mm
Vertical Deformation	PASSED	0.6 (EN 14809)
Rolling Load	PASSED	0.30 (EN 1569 {11/1999})
Friction	PASSED	83 (EN 13036-4)
Sanitization	Excellent	Naturally Bacteriostatic
Sound Insulation	Excellent	+/= 19 dB (ISO 717/2)
Recycled Content	…….	22%
Surface Finish Effect	PASSED	ASTM F2772 (80 – 110)
Vertical Deformation	PASSED	ASTM F2772
Ball Rebound	PASSED	ASTM F2772 > 90%
Shock Absorption	PASSED	ASTM F2772 Category 1

A. Welding Rod:

As supplied by the indoor resilient surfacing manufacturer or supplier. Color to blend with the indoor resilient surfacing color or design. All seams shall be heat welded. Welding rod shall also incorporate the XF® X-treme finish or equivalent.

B. Adhesive:
Multi-Poxy adhesive. Follow adhesive manufacturer's recommendations.
C. Game Line Paint Primer:
As approved by the indoor resilient surfacing manufacturer.
D. Color: As available from the indoor resilient surfacing manufacturer's standard range.

PART 3 - EXECUTION

3.1 *EXAMINATION*

A. It is the responsibility of the general contractor/construction manager to ensure that project/site conditions are acceptable for the installation of the indoor resilient flooring.
B. Verify that the area in which the indoor resilient surfacing will be installed is dry and weather tight. Verify that permanent heat, light and ventilation is installed and operable.
C. Verify that all other work that could cause damage, dirt and dust or interrupt the normal pace of the indoor resilient flooring installation is completed or suspended.
D. Verify that there is a stable room temperature of at least 65°F.
E. Verify that there are no foreign materials or objects on the subfloor and that the subfloor is clean and ready for installation.
F. *Direct Full Spread Adhering to Concrete Subfloor* ***Multi-Poxy Adhesive****:* moisture content less 92% RH when tested per ASTM F2170.
G. Do not average the results of the tests. Report all field test results in writing to the General Contractor, Architect, and End User prior to installation.
H. Verify that the concrete subfloor surface pH level is within the 7 - 10 range.
I. Document the results indicating the slab is within manufacturer's tolerances for slab deviation.

3.2 *PREPARATION OF SURFACES*

A. Sand the entire surface of the concrete slab.
B. Sweep the concrete slab so as to remove all dirt and dust. If a sweeping compound is to be used it must be a sweeping compound that does not contain oil or other items that may inhibit the adhesive bond.
C. Slab must be dust free. In the event that dust impairs adhesive bond, priming the slab prior to application of adhesive may be necessary. Follow installation guidelines.

3.3 *INSTALLATION*

A. The installation area shall be closed to all traffic and activity for a period to be set by the indoor resilient surfacing installer. The indoor resilient surfacing installation shall not begin until the installer is familiar with the existing conditions.

B. All necessary precautions should be taken to minimize noise, smell, dust, the use of hazardous materials and any other items that may inconvenience others.
C. Install the indoor resilient surfacing in strict accordance with the indoor resilient surfacing manufacturer's written instructions.
D. Install the indoor resilient surfacing minimizing cross seams. Provide a seam diagram during the submittal process for approval prior to installation.
E. Paint game lines using approved game line paint primer and game line paint in strict accordance with the game line paint manufacturer's instructions.
F. Install appropriate threshold plates or transition strips where necessary.

3.5 *CLEANING*

A. Remove all unused materials, tools, and equipment and dispose of any debris properly. Clean the indoor resilient surfacing in accordance with the manufacturer's instructions.

3.6 *PROTECTION*

If required, protect the indoor resilient surfacing from damage using coverings approved by the manufacturer until acceptance of work by the customer or their authorized representative.

3.7 *RELATED STANDARDS AND GUIDELINES*

A. ASTM F2170 "Standard Test Method for Determining Relative Humidity In Concrete Floor Slabs Using In-Situ Probes"
B. ASTM F710 "Standard Practice for Preparing Concrete Floors to Receive Resilient Flooring"
C. ACI 302.2R-06 "Guideline for Concrete Slabs that Receive Moisture-Sensitive Flooring Materials"

END OF SECTION

SECTION 09 65 66
ARCHITECTURAL SPECIFICATIONS FOR INDOOR RESILIENT ATHLETIC SURFACING

PART 1 – GENERAL

1.1 *SECTION INCLUDES*

A. Supply and installation of the indoor resilient multipurpose surfacing
B. Application of the game lines
C. References for the correct construction and preparation of concrete slabs to receive resilient flooring.

1.2 *SUBMITTALS*

A. Product Data:
   1. Manufacturer's promotional brochures, specifications and installation instructions
B. Manufacturer Certifications:
   1. Provide certification that accurately identifies the Original Equipment Manufacturer (OEM) of flooring furnished for this project including manufacturer's name, address and factory location.
   2. Suppliers of private label flooring for this project must identify themselves as such and fully disclose the OEM information listed above.
   3. All "manufacturer" requirements in these specifications must be complied with by the OEM, including warranties, certifications, qualifications, product data, test results, environmental requirements, performance data, etc.
C. Samples:
   1. Submit for selection and approval three (3) sets of the indoor resilient multipurpose surfacing, manufacturer's brochures, samples or sample boards of all of the available colors, textures and styles.
   2. Submit color samples of all the available game line paint colors for selection and approval.
D. Closeout Submittals:
   1. Submit three (3) copies of the indoor resilient multipurpose surfacing and manufacturer's maintenance instructions.
   2. Submit three (3) copies of the material and installation warranties as specified.

1.3 *QUALITY ASSURANCE*

A. Qualifications:
   1. The indoor resilient multipurpose surfacing shall have been actively marketed for a minimum of ten (10) years.
   2. The indoor resilient multipurpose surfacing shall be manufactured in an ISO 9001 certified plant.
   3. The indoor resilient multipurpose surfacing shall be manufactured in an ISO 14001 certified plant.
   4. The indoor resilient multipurpose surfacing supplier shall be an established firm, experienced in the field, and competent in the techniques required by the manufacturer.
   5. The installer of the indoor resilient multipurpose surfacing shall have a minimum of five (5) years of experience in the field installing indoor resilient multipurpose surfacing and have worked on at least five (5) projects of similar size, type and complexity.

B. Certifications:
   1. Installer to submit the indoor resilient athletic surfacing manufacturer's certification attesting that they are a trained installer of the indoor resilient multipurpose surfacing.
   2. The indoor resilient multipurpose surfacing manufacturer to submit official ISO 9001 certification for the facility in which the indoor resilient multipurpose surfacing is manufactured.

C. Testing:
   1. Tests shall be relative for multi-purpose use with certificates from independent testing resources to be made available upon request.
   2. Test results shall be no more than 5 years old and performed according to ASTM standard testing procedures.

1.4 *DELIVERY, STORAGE AND HANDLING*

A. Delivery:
   Material shall not be delivered until all related work is in place and finished and/or proper storage facilities and conditions can be provided and guaranteed stable according to FieldTurf USA, Inc. recommendations.

B. Storage:
   1. Store the material in a secure, clean and dry location.
   2. Maintain temperature between 55° and 85° Fahrenheit.
   3. Store the indoor resilient athletic surfacing rolls in an upright position on a smooth flat surface immediately upon delivery to jobsite.
   4. Rolls shipped in rigid protective cardboard containers can be laid horizontally prior to unpacking and installation.

1.5 *PROJECT/SITE CONDITIONS*

A. It is the responsibility of the general contractor/construction manager to maintain project/site conditions acceptable for the installation of the indoor resilient multipurpose flooring.

B. The area in which the indoor resilient multipurpose surfacing will be installed shall be dry and weather tight. Permanent heat, light and ventilation shall be installed and operable.

C. All other trades shall have completed their work prior to the installation of the resilient athletic flooring. The general contractor or construction manager shall maintain a secure and clean working environment before, during and after the installation.

D. Maintain a stable room temperature of at least 65°F for a minimum of one (1) week prior to, during and thereafter installation.

E. An effective low-permeance vapor barrier is placed directly beneath the concrete subfloor. For "on" or "below grade" installations, it is recommended to provide a permanent vapor barrier resistant to long term hydrostatic pressure/moisture exposure. Protrusions should be sealed to prevent moisture migration into the slab. Moisture should not be allowed to enter the slab after the completed construction.

F. Concrete subfloor surface pH level within the 7 to 11 range dependent upon installation type.

G. Concrete subfloor should be no greater than 1/8" within a 10 ft diameter. This tolerance can be measured in accordance with ASTM E1155. A specified (F_F) of 50 and an (F_L) of 30 should reach this degree of floor flatness and floor level. There is no numerical correlation between F numbers and the deviation from the straight

edge. However, the above specified numbers should achieve a flat floor with minimal deviation in the slab. Reference ACI 117 and ACI 302.1R. The general contractor should provide a certificate of compliance with the above recommendations.

H. Concrete subfloor must be clean and free of all foreign materials or objects including, but not limited to, curing compounds and sealers.

I. Fill cracks, grooves, voids, depressions, and other minor imperfections. Follow the manufacturer's directions. Moveable joints must be treated utilizing specific transitioning joint devices depending upon the architect's recommendations. Follow current ASTM F710 guidelines for the preparation of concrete slabs to receive resilient flooring.

J. Refer to ACI 302.2R "Guidelines for Concrete Slabs that Receive Moisture-Sensitive Flooring Materials" for concrete design and construction.

K. Concrete slab shall be fortified with continual steel reinforcement. Fiber reinforcement alone shall not be considered adequate fortification.

1.6 *WARRANTY*

A. Special Limited Warranty:
   1. Manufacturer's standard form in which manufacturer agrees to repair or replace sports flooring including labor that fails within specified warranty period.

B. Material warranty must be direct from the product manufacturer.
   1. Material warranties from separate or third party insurance providers are not valid.
   2. Material warranties must come from original manufacturer or division thereof. Private label warranties from distributors or brokers are not valid. Supply original point of manufacturing upon request.

C. Failures include, but are not limited to, the following:
   1. Material manufacturing defects.
   2. Surface wear and deterioration to the point of wear-through of wear layer per ASTM F410/ASTM F1303.
   3. Failure due to substrate moisture exposure exceeding 80 percent relative humidity when tested according to ASTM F2170.

D. Warranty Period:
   1. <u>For material defects and surface wear-through:</u> **15** years from date of substantial completion.

E. Installer's Limited Warranty:
   1. Installer's standard form in which installer agrees to repair or replace sports flooring that fails due to poor workmanship or faulty installation within the specified warranty period.
   2. Warranty Period: 2 years from date of substantial completion.

1.7 *ADDITIONAL MATERIALS*

A. Furnish to the owner additional materials containing a total of at least 1% of each different color or design of the indoor resilient athletic surfacing used on the project.

1.8 *LEED™ CERTIFICATION*

A. The indoor resilient athletic surfacing should be able to help this facility to achieve points towards *LEED™ certification.* Flooring system must be certified by FloorScore.
B. LEED categories positively affected by the indoor resilient athletic surfacing:

LEED™ V4 Credit		Contribution
Materials & Resources: Building Product Disclosure & Optimization (BPDO)		
MRc3: Sourcing of Raw Materials	Options 1 & 2	2 Points
MRc4: Material Ingredients	Option 1	1 Point
MRc5: Construction and Demolition Management	Reclamation and Recycling	ReStart® Program
Indoor Environmental Quality		
EQc2: Low-Emitting Materials	TVOC: 0.5 mg/m3 or less	FloorScore®

PART 2 - PRODUCTS

2.1 *MANUFACTURERS*

A. The basis of the design for the indoor resilient multipurpose surfacing is Omnisports 3.5 mm and Lumaflex Elite system as manufactured by Tarkett.
B. All other installation accessories and related components must be either made or approved by the indoor resilient athletic surfacing manufacturer.
C. Other products may be approved as equal if deemed qualified and submitted in accordance with the General Conditions.
D. Test reports confirming compliance from an independent sports laboratory must be provided along with samples, technical data, installation, maintenance, and warranty prior to acceptance as an alternative product.

2.2 *MATERIALS*

A. Omnisports 3.5 mm - Prefabricated sport surface 2.0 mm (0.08″) with wood flooring design and slightly textured embossed surface as supplied by Tarkett.
   1. Embossing of wood design and solid colors must be the same; varying embossing or surface textures will not be allowed.
   2. Printing of wood design shall closely resemble standard wood strip flooring in size, color, board length, and grain appearance.
   3. The wood design shall be protected by a clear layer of pure PVC (Polyvinyl Chloride) and TopClean xp, a factory-applied UV cured urethane treatment.
   4. Intermediate layers shall be fortified with a non-woven fiberglass grid for increased dimensional stability.
   5. The Lumaflex Elite System shall incorporate Lumaflex Elite double tongue and grooved multi-ply engineered panels, force reduction cushion, and appropriate vapor retarder.

B. Physical properties of the indoor resilient athletic surfacing shall conform to the following minimums:

Width	—	6′ 6″ (2 m)
Length	—	85′ (25.9m) approx.
Wear Layer	—	2 mm
Total Thickness	—	3.5 mm
Total Combined Thickness		1 3/8″ (34.2 mm approx.)
Wear Layer	Type 1– Grade 1	ASTM F1303/F410
Rolling Load	PASSED	0.30 (EN 1569 {11/1999})
Force Reduction	PASSED	ASTM F2772 Class 5
Surface Finish Effect	PASSED	ASTM F2772 (80 – 110)
Vertical Deformation	PASSED	ASTM F2772
Ball Rebound	PASSED	ASTM F2772 > 90%
Chemical Resistance	Excellent	ASTM F925
Impact Resistance	PASSED	EN 1717
Abrasion Resistance	PASSED	0.10 (EN ISO 5470-1 {06/1999})
Static Load Limit	PASSED	ASTM F970- Load 175 Lbs
Phthalate-free technology	—	YES
REACH Compliant	—	YES
Heavy Metals	—	NO
ISO 9001	—	YES
ISO 14001	—	YES

1. Color: As available from the indoor resilient athletic surfacing manufacturer's standard range.
2. Hardwood Design Series: A wood look design as available from the indoor resilient athletic surfacing manufacturer's standard range.
3. Texture: Texture to remain consistent between solid colors and wood design when blending colors.

C. Welding Rod: As supplied by the indoor resilient athletic surfacing manufacturer or supplier.
   1. Color to blend with the indoor resilient athletic surfacing color or design.
   2. All seams shall be welded to create a monolithic and impermeable surface.

D. Adhesive: As approved by the indoor resilient athletic surfacing manufacturer.

E. Game Line Paint and Primer: As approved by the indoor resilient athletic surfacing manufacturer.

PART 3 - EXECUTION

3.1 *EXAMINATION*

A. It is the responsibility of the general contractor/construction manager to ensure that project/site conditions are acceptable for the installation of the indoor resilient athletic flooring.
B. Verify that the area in which the indoor resilient athletic surfacing will be installed is dry and weather tight. Verify that permanent heat, light and ventilation are installed and operable.
C. Verify that all other work that could cause damage, dirt and dust or interrupt the normal pace of the indoor resilient athletic flooring installation is completed or suspended.
D. Verify that there is a stable room temperature of at least 65◦F.
E. Verify that there are no foreign materials or objects on the subfloor and that the subfloor is clean and ready for installation.
F. *Concrete Subfloor: moisture content less than 85% RH when tested per ASTM F2170.*
G. Follow Fieldturf USA, Inc. installation recommendations.
H. Do not average the results of the tests. Report all field test results in writing to the General Contractor, Architect, and End User prior to installation.
I. Verify that the concrete subfloor surface pH level is within the 7 - 11 range.
J. Document the results confirming the slab is within manufacturer's tolerances for slab deviation.

3.2 *PREPARATION OF SURFACES*

A. Sand the entire surface of the concrete slab.
B. Sweep the concrete slab so as to remove all dirt and dust. If a sweeping compound is to be used it must be a sweeping compound that does not contain oil or other items that may inhibit the adhesive bond.
C. Slab must be dust free. In the event that dust impairs adhesive bond, priming the slab prior to application of adhesive may be necessary. Follow installation guidelines.
D. Follow OSHA guidelines.

3.3 *INSTALLATION*

A. The installation area shall be closed to all traffic and activity for a period to be set by the indoor resilient athletic surfacing installer. The indoor resilient athletic surfacing installation shall not begin until the installer is familiar with the existing conditions.
B. All necessary precautions should be taken to minimize noise, smell, dust, the use of hazardous materials and any other items that may inconvenience others.
C. Install the indoor resilient athletic surfacing in strict accordance with the indoor resilient athletic surfacing manufacturer's written instructions.
D. Install the indoor resilient athletic surfacing minimizing cross seams. Provide a seam diagram during the submittal process for approval prior to installation. Vinyl Sheet Flooring Seams: Comply with ASTM F 1516. Rout joints and heat weld to permanently and seamlessly fuse sections together.
E. Paint game lines using approved game line paint primer and game line paint in strict accordance with the game line paint manufacturer's instructions.
F. Install appropriate threshold plates or transition strips where necessary.

2.0 *CLEANING*

A. Remove all unused materials, tools, and equipment and dispose of any debris properly. Clean the indoor resilient athletic surfacing in accordance with the manufacturer's instructions.

3.6 *PROTECTION*

A. If required, protect the indoor resilient athletic surfacing from damage using coverings approved by the manufacturer until acceptance of work by the customer or their authorized representative.

3.7 *RELATED STANDARDS AND GUIDELINES*

A. ASTM F2170 "Standard Test Method for Determining Relative Humidity In Concrete Floor Slabs Using In-Situ Probes"
B. ASTM F710 "Standard Practice for Preparing Concrete Floors to Receive Resilient Flooring"
C. ACI 302.2R-06 "Guideline for Concrete Slabs that Receive Moisture-Sensitive Flooring Materials"
D. ASTM F2772-11 "Standard Specification for Athletic Performance Properties of Indoor Sports Floor Systems"

END OF SECTION

SECTION 09 65 66
ARCHITECTURAL SPECIFICATIONS FOR INDOOR RESILIENT ATHLETIC SURFACING

PART 1 – GENERAL

1.1 *SECTION INCLUDES*

A. Supply and installation of the indoor resilient multipurpose surfacing
B. Application of the game lines
C. References for the correct construction and preparation of concrete slabs to receive resilient flooring.

1.2 *SUBMITTALS*

A. Product Data:
   1. Manufacturer's promotional brochures, specifications and installation instructions
B. Manufacturer Certifications:
   1. Provide certification that accurately identifies the Original Equipment Manufacturer (OEM) of flooring furnished for this project including manufacturer's name, address and factory location.
   2. Suppliers of private label flooring for this project must identify themselves as such and fully disclose the OEM information listed above.
   3. All "manufacturer" requirements in these specifications must be complied with by the OEM, including warranties, certifications, qualifications, product data, test results, environmental requirements, performance data, etc.
C. Samples:
   1. Submit for selection and approval three (3) sets of the indoor resilient multipurpose surfacing, manufacturer's brochures, samples or sample boards of all of the available colors, textures and styles.
   2. Submit color samples of all the available game line paint colors for selection and approval.
D. Closeout Submittals:
   1. Submit three (3) copies of the indoor resilient multipurpose surfacing and manufacturer's maintenance instructions.
   2. Submit three (3) copies of the material and installation warranties as specified.

1.3 *QUALITY ASSURANCE*

A. Qualifications:
   1. The indoor resilient multipurpose surfacing shall have been actively marketed for a minimum of ten (10) years.
   2. The indoor resilient multipurpose surfacing shall be manufactured in an ISO 9001 certified plant.
   3. The indoor resilient multipurpose surfacing shall be manufactured in an ISO 14001 certified plant.
   4. The indoor resilient multipurpose surfacing supplier shall be an established firm, experienced in the field, and competent in the techniques required by the manufacturer.
   5. The installer of the indoor resilient multipurpose surfacing shall have a minimum of five (5) years of experience in the field installing indoor resilient multipurpose surfacing and have worked on at least five (5) projects of similar size, type and complexity.

B. Certifications:
   1. Installer to submit the indoor resilient athletic surfacing manufacturer's certification attesting that they are a trained installer of the indoor resilient multipurpose surfacing.
   2. The indoor resilient multipurpose surfacing manufacturer to submit official ISO 9001 certification for the facility in which the indoor resilient multipurpose surfacing is manufactured.

C. Testing:
   1. Tests shall be relative for multi-purpose use with certificates from independent testing resources to be made available upon request.
   2. Test results shall be no more than 5 years old and performed according to ASTM standard testing procedures.

1.4 *DELIVERY, STORAGE AND HANDLING*

A. Delivery:
   Material shall not be delivered until all related work is in place and finished and/or proper storage facilities and conditions can be provided and guaranteed stable according to FieldTurf USA, Inc. recommendations.

B. Storage:
   1. Store the material in a secure, clean and dry location.
   2. Maintain temperature between 55° and 85° Fahrenheit.
   3. Store the indoor resilient athletic surfacing rolls in an upright position on a smooth flat surface immediately upon delivery to jobsite.
   4. Rolls shipped in rigid protective cardboard containers can be laid horizontally prior to unpacking and installation.

1.5 *PROJECT/SITE CONDITIONS*

A. It is the responsibility of the general contractor/construction manager to maintain project/site conditions acceptable for the installation of the indoor resilient multipurpose flooring.

B. The area in which the indoor resilient multipurpose surfacing will be installed shall be dry and weather tight. Permanent heat, light and ventilation shall be installed and operable.

C. All other trades shall have completed their work prior to the installation of the resilient athletic flooring. The general contractor or construction manager shall maintain a secure and clean working environment before, during and after the installation.

D. Maintain a stable room temperature of at least 65°F for a minimum of one (1) week prior to, during and thereafter installation.

E. An effective low-permeance vapor barrier is placed directly beneath the concrete subfloor. For "on" or "below grade" installations, it is recommended to provide a permanent vapor barrier resistant to long term hydrostatic pressure/moisture exposure. Protrusions should be sealed to prevent moisture migration into the slab. Moisture should not be allowed to enter the slab after the completed construction.

F. Concrete subfloor surface pH level within the 7 to 11 range dependent upon installation type.

G. Concrete subfloor should be no greater than 1/8" within a 10 ft diameter. This tolerance can be measured in accordance with ASTM E1155. A specified (F_F) of 50 and an (F_L) of 30 should reach this degree of floor flatness and floor level. There is no numerical correlation between F numbers and the deviation from the straight

edge. However, the above specified numbers should achieve a flat floor with minimal deviation in the slab. Reference ACI 117 and ACI 302.1R. The general contractor should provide a certificate of compliance with the above recommendations.

H. Concrete subfloor must be clean and free of all foreign materials or objects including, but not limited to, curing compounds and sealers.

I. Fill cracks, grooves, voids, depressions, and other minor imperfections. Follow the manufacturer's directions. Moveable joints must be treated utilizing specific transitioning joint devices depending upon the architect's recommendations. Follow current ASTM F710 guidelines for the preparation of concrete slabs to receive resilient flooring.

J. Refer to ACI 302.2R "Guidelines for Concrete Slabs that Receive Moisture-Sensitive Flooring Materials" for concrete design and construction.

K. Concrete slab shall be fortified with continual steel reinforcement. Fiber reinforcement alone shall not be considered adequate fortification.

1.6 *WARRANTY*

A. Special Limited Warranty:
   1. Manufacturer's standard form in which manufacturer agrees to repair or replace sports flooring including labor that fails within specified warranty period.

B. Material warranty must be direct from the product manufacturer.
   1. Material warranties from separate or third party insurance providers are not valid.
   2. Material warranties must come from original manufacturer or division thereof. Private label warranties from distributors or brokers are not valid. Supply original point of manufacturing upon request.

C. Failures include, but are not limited to, the following:
   1. Material manufacturing defects.
   2. Surface wear and deterioration to the point of wear-through of wear layer per ASTM F410/ASTM F1303.
   3. Failure due to substrate moisture exposure exceeding 80 percent relative humidity when tested according to ASTM F2170.

D. Warranty Period:
   1. <u>For material defects and surface wear-through:</u> **15** years from date of substantial completion.

E. Installer's Limited Warranty:
   1. Installer's standard form in which installer agrees to repair or replace sports flooring that fails due to poor workmanship or faulty installation within the specified warranty period.
   2. Warranty Period: 2 years from date of substantial completion.

1.7 *ADDITIONAL MATERIALS*

A. Furnish to the owner additional materials containing a total of at least 1% of each different color or design of the indoor resilient athletic surfacing used on the project.

1.8 *LEED™ CERTIFICATION*

A. The indoor resilient athletic surfacing should be able to help this facility to achieve points towards *LEED™ certification.* Flooring system must be certified by FloorScore.
B. LEED categories positively affected by the indoor resilient athletic surfacing:

LEED™ V4 Credit		Contribution
Materials & Resources: Building Product Disclosure & Optimization (BPDO)		
MRc3: Sourcing of Raw Materials	Options 1 & 2	2 Points
MRc4: Material Ingredients	Option 1	1 Point
MRc5: Construction and Demolition Management	Reclamation and Recycling	ReStart® Program
Indoor Environmental Quality		
EQc2: Low-Emitting Materials	TVOC: 0.5 mg/m3 or less	FloorScore®

PART 2 - PRODUCTS

2.1 *MANUFACTURERS*

A. The basis of the design for the indoor resilient multipurpose surfacing is Omnisports 3.5 mm and Lumaflex Fit system as manufactured by Tarkett.
B. All other installation accessories and related components must be either made or approved by the indoor resilient athletic surfacing manufacturer.
C. Other products may be approved as equal if deemed qualified and submitted in accordance with the General Conditions.
D. Test reports confirming compliance from an independent sports laboratory must be provided along with samples, technical data, installation, maintenance, and warranty prior to acceptance as an alternative product.

2.2 *MATERIALS*

A. Omnisports 3.5 mm - Prefabricated sport surface 2.0 mm (0.08″) with wood flooring design and slightly textured embossed surface as supplied by Tarkett.
   1. Embossing of wood design and solid colors must be the same; varying embossing or surface textures will not be allowed.
   2. Printing of wood design shall closely resemble standard wood strip flooring in size, color, board length, and grain appearance.
   3. The wood design shall be protected by a clear layer of pure PVC (Polyvinyl Chloride) and TopClean xp, a factory-applied UV cured urethane treatment.
   4. Intermediate layers shall be fortified with a non-woven fiberglass grid for increased dimensional stability.
   5. The Lumaflex Fit System shall incorporate Lumaflex Fit double tongue and grooved multi-ply engineered panels, force reduction cushion, and appropriate vapor retarder.

B. Physical properties of the indoor resilient athletic surfacing shall conform to the following minimums:

Width	—	6′ 6″ (2 m)
Length	—	85′ (25.9m) approx.
Wear Layer	—	2 mm
Total Thickness	—	3.5 mm
Total Combined Thickness		47 mm (1.85″)
Wear Layer	Type 1– Grade 1	ASTM F1303/F410
Rolling Load	PASSED	0.30 (EN 1569 {11/1999})
Force Reduction	PASSED	ASTM F2772 Class 5
Surface Finish Effect	PASSED	ASTM F2772 (80 – 110)
Ball Rebound	PASSED	ASTM F2772 > 90%
Chemical Resistance	Excellent	ASTM F925
Impact Resistance	PASSED	EN 1717
Abrasion Resistance	PASSED	0.10 (EN ISO 5470-1 {06/1999})
Static Load Limit	PASSED	ASTM F970- Load 175 Lbs
Phthalate-free technology	—	YES
REACH Compliant	—	YES
Heavy Metals	—	NO
ISO 9001	—	YES
ISO 14001	—	YES

1. Color: As available from the indoor resilient athletic surfacing manufacturer's standard range.
2. Hardwood Design Series: A wood look design as available from the indoor resilient athletic surfacing manufacturer's standard range.
3. Texture: Texture to remain consistent between solid colors and wood design when blending colors.

C. Welding Rod: As supplied by the indoor resilient athletic surfacing manufacturer or supplier.
   1. Color to blend with the indoor resilient athletic surfacing color or design.
   2. All seams shall be welded to create a monolithic and impermeable surface.

D. Adhesive: As approved by the indoor resilient athletic surfacing manufacturer.

E. Game Line Paint and Primer: As approved by the indoor resilient athletic surfacing manufacturer.

PART 3 - EXECUTION

3.1 *EXAMINATION*

A. It is the responsibility of the general contractor/construction manager to ensure that project/site conditions are acceptable for the installation of the indoor resilient athletic flooring.
B. Verify that the area in which the indoor resilient athletic surfacing will be installed is dry and weather tight. Verify that permanent heat, light and ventilation are installed and operable.
C. Verify that all other work that could cause damage, dirt and dust or interrupt the normal pace of the indoor resilient athletic flooring installation is completed or suspended.
D. Verify that there is a stable room temperature of at least 65◦F.
E. Verify that there are no foreign materials or objects on the subfloor and that the subfloor is clean and ready for installation.
F. *Concrete Subfloor: moisture content less than 85% RH when tested per ASTM F2170.*
G. Follow Fieldturf USA, Inc. installation recommendations.
H. Do not average the results of the tests. Report all field test results in writing to the General Contractor, Architect, and End User prior to installation.
I. Verify that the concrete subfloor surface pH level is within the 7 - 11 range.
J. Document the results confirming the slab is within manufacturer's tolerances for slab deviation.

3.2 *PREPARATION OF SURFACES*

A. Sand the entire surface of the concrete slab.
B. Sweep the concrete slab so as to remove all dirt and dust. If a sweeping compound is to be used it must be a sweeping compound that does not contain oil or other items that may inhibit the adhesive bond.
C. Slab must be dust free. In the event that dust impairs adhesive bond, priming the slab prior to application of adhesive may be necessary. Follow installation guidelines.
D. Follow OSHA guidelines.

3.3 *INSTALLATION*

A. The installation area shall be closed to all traffic and activity for a period to be set by the indoor resilient athletic surfacing installer. The indoor resilient athletic surfacing installation shall not begin until the installer is familiar with the existing conditions.
B. All necessary precautions should be taken to minimize noise, smell, dust, the use of hazardous materials and any other items that may inconvenience others.
C. Install the indoor resilient athletic surfacing in strict accordance with the indoor resilient athletic surfacing manufacturer's written instructions.
D. Install the indoor resilient athletic surfacing minimizing cross seams. Provide a seam diagram during the submittal process for approval prior to installation. Vinyl Sheet Flooring Seams: Comply with ASTM F 1516. Rout joints and heat weld to permanently and seamlessly fuse sections together.
E. Paint game lines using approved game line paint primer and game line paint in strict accordance with the game line paint manufacturer's instructions.
F. Install appropriate threshold plates or transition strips where necessary.

2.0 *CLEANING*

A. Remove all unused materials, tools, and equipment and dispose of any debris properly. Clean the indoor resilient athletic surfacing in accordance with the manufacturer's instructions.

3.6 *PROTECTION*

A. If required, protect the indoor resilient athletic surfacing from damage using coverings approved by the manufacturer until acceptance of work by the customer or their authorized representative.

3.7 *RELATED STANDARDS AND GUIDELINES*

A. ASTM F2170 "Standard Test Method for Determining Relative Humidity In Concrete Floor Slabs Using In-Situ Probes"
B. ASTM F710 "Standard Practice for Preparing Concrete Floors to Receive Resilient Flooring"
C. ACI 302.2R-06 "Guideline for Concrete Slabs that Receive Moisture-Sensitive Flooring Materials"
D. ASTM F2772-11 "Standard Specification for Athletic Performance Properties of Indoor Sports Floor Systems"

END OF SECTION

SECTION 09 65 66
ARCHITECTURAL SPECIFICATIONS FOR INDOOR RESILIENT ATHLETIC SURFACING

PART 1 – GENERAL

1.1 *SECTION INCLUDES*

A. Supply and installation of the indoor resilient multipurpose surfacing
B. Application of the game lines
C. References for the correct construction and preparation of concrete slabs to receive resilient flooring.

1.2 *SUBMITTALS*

A. Product Data:
   1. Manufacturer's promotional brochures, specifications and installation instructions
B. Manufacturer Certifications:
   1. Provide certification that accurately identifies the Original Equipment Manufacturer (OEM) of flooring furnished for this project including manufacturer's name, address and factory location.
   2. Suppliers of private label flooring for this project must identify themselves as such and fully disclose the OEM information listed above.
   3. All "manufacturer" requirements in these specifications must be complied with by the OEM, including warranties, certifications, qualifications, product data, test results, environmental requirements, performance data, etc.
C. Samples:
   1. Submit for selection and approval three (3) sets of the indoor resilient multipurpose surfacing, manufacturer's brochures, samples or sample boards of all of the available colors, textures and styles.
   2. Submit color samples of all the available game line paint colors for selection and approval.
D. Closeout Submittals:
   1. Submit three (3) copies of the indoor resilient multipurpose surfacing and manufacturer's maintenance instructions.
   2. Submit three (3) copies of the material and installation warranties as specified.

1.3 *QUALITY ASSURANCE*

A. Qualifications:
   1. The indoor resilient multipurpose surfacing shall have been actively marketed for a minimum of ten (10) years.
   2. The indoor resilient multipurpose surfacing shall be manufactured in an ISO 9001 certified plant.
   3. The indoor resilient multipurpose surfacing shall be manufactured in an ISO 14001 certified plant.
   4. The indoor resilient multipurpose surfacing supplier shall be an established firm, experienced in the field, and competent in the techniques required by the manufacturer.
   5. The installer of the indoor resilient multipurpose surfacing shall have a minimum of five (5) years of experience in the field installing indoor resilient multipurpose surfacing and have worked on at least five (5) projects of similar size, type and complexity.

B. Certifications:
   1. Installer to submit the indoor resilient athletic surfacing manufacturer's certification attesting that they are a trained installer of the indoor resilient multipurpose surfacing.
   2. The indoor resilient multipurpose surfacing manufacturer to submit official ISO 9001 certification for the facility in which the indoor resilient multipurpose surfacing is manufactured.

C. Testing:
   1. Tests shall be relative for multi-purpose use with certificates from independent testing resources to be made available upon request.
   2. Test results shall be no more than 5 years old and performed according to ASTM standard testing procedures.

1.4 *DELIVERY, STORAGE AND HANDLING*

A. Delivery:
   Material shall not be delivered until all related work is in place and finished and/or proper storage facilities and conditions can be provided and guaranteed stable according to FieldTurf USA, Inc. recommendations.

B. Storage:
   1. Store the material in a secure, clean and dry location.
   2. Maintain temperature between 55° and 85° Fahrenheit.
   3. Store the indoor resilient athletic surfacing rolls in an upright position on a smooth flat surface immediately upon delivery to jobsite.
   4. Rolls shipped in rigid protective cardboard containers can be laid horizontally prior to unpacking and installation.

1.5 *PROJECT/SITE CONDITIONS*

A. It is the responsibility of the general contractor/construction manager to maintain project/site conditions acceptable for the installation of the indoor resilient multipurpose flooring.

B. The area in which the indoor resilient multipurpose surfacing will be installed shall be dry and weather tight. Permanent heat, light and ventilation shall be installed and operable.

C. All other trades shall have completed their work prior to the installation of the resilient athletic flooring. The general contractor or construction manager shall maintain a secure and clean working environment before, during and after the installation.

D. Maintain a stable room temperature of at least 65°F for a minimum of one (1) week prior to, during and thereafter installation.

E. An effective low-permeance vapor barrier is placed directly beneath the concrete subfloor. For "on" or "below grade" installations, it is recommended to provide a permanent vapor barrier resistant to long term hydrostatic pressure/moisture exposure. Protrusions should be sealed to prevent moisture migration into the slab. Moisture should not be allowed to enter the slab after the completed construction.

F. Concrete subfloor surface pH level within the 7 to 11 range dependent upon installation type.

G. Concrete subfloor should be no greater than 1/8" within a 10 ft diameter. This tolerance can be measured in accordance with ASTM E1155. A specified (F_F) of 50 and an (F_L) of 30 should reach this degree of floor flatness and floor level. There is no numerical correlation between F numbers and the deviation from the straight

edge. However, the above specified numbers should achieve a flat floor with minimal deviation in the slab. Reference ACI 117 and ACI 302.1R. The general contractor should provide a certificate of compliance with the above recommendations.

H. Concrete subfloor must be clean and free of all foreign materials or objects including, but not limited to, curing compounds and sealers.

I. Fill cracks, grooves, voids, depressions, and other minor imperfections. Follow the manufacturer's directions. Moveable joints must be treated utilizing specific transitioning joint devices depending upon the architect's recommendations. Follow current ASTM F710 guidelines for the preparation of concrete slabs to receive resilient flooring.

J. Refer to ACI 302.2R "Guidelines for Concrete Slabs that Receive Moisture-Sensitive Flooring Materials" for concrete design and construction.

K. Concrete slab shall be fortified with continual steel reinforcement. Fiber reinforcement alone shall not be considered adequate fortification.

1.6 *WARRANTY*

A. Special Limited Warranty:
   1. Manufacturer's standard form in which manufacturer agrees to repair or replace sports flooring including labor that fails within specified warranty period.

B. Material warranty must be direct from the product manufacturer.
   1. Material warranties from separate or third party insurance providers are not valid.
   2. Material warranties must come from original manufacturer or division thereof. Private label warranties from distributors or brokers are not valid. Supply original point of manufacturing upon request.

C. Failures include, but are not limited to, the following:
   1. Material manufacturing defects.
   2. Surface wear and deterioration to the point of wear-through of wear layer per ASTM F410/ASTM F1303.
   3. Failure due to substrate moisture exposure exceeding 80 percent relative humidity when tested according to ASTM F2170.

D. Warranty Period:
   1. <u>For material defects and surface wear-through:</u> **15** years from date of substantial completion.

E. Installer's Limited Warranty:
   1. Installer's standard form in which installer agrees to repair or replace sports flooring that fails due to poor workmanship or faulty installation within the specified warranty period.
   2. Warranty Period: 2 years from date of substantial completion.

1.7 *ADDITIONAL MATERIALS*

A. Furnish to the owner additional materials containing a total of at least 1% of each different color or design of the indoor resilient athletic surfacing used on the project.

1.8 *LEED™ CERTIFICATION*

A. The indoor resilient athletic surfacing should be able to help this facility to achieve points towards *LEED™ certification.* Flooring system must be certified by FloorScore.
B. LEED categories positively affected by the indoor resilient athletic surfacing:

LEED™ V4 Credit		Contribution
Materials & Resources: Building Product Disclosure & Optimization (BPDO)		
MRc3: Sourcing of Raw Materials	Options 1 & 2	2 Points
MRc4: Material Ingredients	Option 1	1 Point
MRc5: Construction and Demolition Management	Reclamation and Recycling	ReStart® Program
Indoor Environmental Quality		
EQc2: Low-Emitting Materials	TVOC: 0.5 mg/m3 or less	FloorScore®

PART 2 - PRODUCTS

2.1 *MANUFACTURERS*

A. The basis of the design for the indoor resilient multipurpose surfacing is Omnisports 3.5 mm and Lumaflex system as manufactured by Tarkett.
B. All other installation accessories and related components must be either made or approved by the indoor resilient athletic surfacing manufacturer.
C. Other products may be approved as equal if deemed qualified and submitted in accordance with the General Conditions.
D. Test reports confirming compliance from an independent sports laboratory must be provided along with samples, technical data, installation, maintenance, and warranty prior to acceptance as an alternative product.

2.2 *MATERIALS*

A. Omnisports 3.5 mm - Prefabricated sport surface 2.0 mm (0.08″) with wood flooring design and slightly textured embossed surface as supplied by Tarkett.
   1. Embossing of wood design and solid colors must be the same; varying embossing or surface textures will not be allowed.
   2. Printing of wood design shall closely resemble standard wood strip flooring in size, color, board length, and grain appearance.
   3. The wood design shall be protected by a clear layer of pure PVC (Polyvinyl Chloride) and TopClean xp, a factory-applied UV cured urethane treatment.
   4. Intermediate layers shall be fortified with a non-woven fiberglass grid for increased dimensional stability.
   5. The Lumaflex System shall incorporate Lumaflex double tongue and grooved multi-ply engineered panels, force reduction cushion, and appropriate vapor retarder.

B. Physical properties of the indoor resilient athletic surfacing shall conform to the following minimums:

Width	—	6′ 6″ (2 m)
Length	—	85′ (25.9m) approx.
Wear Layer	—	2 mm
Total Thickness	—	3.5 mm
Total Combined Thickness		1 3/8″ (34.2 mm approx.)
Wear Layer	Type 1– Grade 1	ASTM F1303/F410
Rolling Load	PASSED	0.30 (EN 1569 {11/1999})
Force Reduction	PASSED	ASTM F2772 Class 4
Surface Finish Effect	PASSED	ASTM F2772 (80 – 110)
Vertical Deformation	PASSED	ASTM F2772
Ball Rebound	PASSED	ASTM F2772 > 90%
Chemical Resistance	Excellent	ASTM F925
Impact Resistance	PASSED	EN 1717
Abrasion Resistance	PASSED	0.10 (EN ISO 5470-1 {06/1999})
Static Load Limit	PASSED	ASTM F970- Load 175 Lbs
Fire Rating	PASSED	ASTM E648 Class 1
Phthalate-free technology	—	YES
REACH Compliant	—	YES
Heavy Metals	—	NO
ISO 9001	—	YES
ISO 14001	—	YES

1. Color: As available from the indoor resilient athletic surfacing manufacturer's standard range.
2. Hardwood Design Series: A wood look design as available from the indoor resilient athletic surfacing manufacturer's standard range.
3. Texture: Texture to remain consistent between solid colors and wood design when blending colors.

C. Welding Rod: As supplied by the indoor resilient athletic surfacing manufacturer or supplier.
   1. Color to blend with the indoor resilient athletic surfacing color or design.
   2. All seams shall be welded to create a monolithic and impermeable surface.

D. Adhesive: As approved by the indoor resilient athletic surfacing manufacturer.

E. Game Line Paint and Primer: As approved by the indoor resilient athletic surfacing manufacturer.

PART 3 - EXECUTION

3.1 *EXAMINATION*

A. It is the responsibility of the general contractor/construction manager to ensure that project/site conditions are acceptable for the installation of the indoor resilient athletic flooring.
B. Verify that the area in which the indoor resilient athletic surfacing will be installed is dry and weather tight. Verify that permanent heat, light and ventilation are installed and operable.
C. Verify that all other work that could cause damage, dirt and dust or interrupt the normal pace of the indoor resilient athletic flooring installation is completed or suspended.
D. Verify that there is a stable room temperature of at least 65◦F.
E. Verify that there are no foreign materials or objects on the subfloor and that the subfloor is clean and ready for installation.
F. *Concrete Subfloor: moisture content less than 85% RH when tested per ASTM F2170.*
G. Follow Fieldturf USA, Inc. installation recommendations.
H. Do not average the results of the tests. Report all field test results in writing to the General Contractor, Architect, and End User prior to installation.
I. Verify that the concrete subfloor surface pH level is within the 7 - 11 range.
J. Document the results confirming the slab is within manufacturer's tolerances for slab deviation.

3.2 *PREPARATION OF SURFACES*

A. Sand the entire surface of the concrete slab.
B. Sweep the concrete slab so as to remove all dirt and dust. If a sweeping compound is to be used it must be a sweeping compound that does not contain oil or other items that may inhibit the adhesive bond.
C. Slab must be dust free. In the event that dust impairs adhesive bond, priming the slab prior to application of adhesive may be necessary. Follow installation guidelines.
D. Follow OSHA guidelines.

3.3 *INSTALLATION*

A. The installation area shall be closed to all traffic and activity for a period to be set by the indoor resilient athletic surfacing installer. The indoor resilient athletic surfacing installation shall not begin until the installer is familiar with the existing conditions.
B. All necessary precautions should be taken to minimize noise, smell, dust, the use of hazardous materials and any other items that may inconvenience others.
C. Install the indoor resilient athletic surfacing in strict accordance with the indoor resilient athletic surfacing manufacturer's written instructions.
D. Install the indoor resilient athletic surfacing minimizing cross seams. Provide a seam diagram during the submittal process for approval prior to installation. Vinyl Sheet Flooring Seams: Comply with ASTM F 1516. Rout joints and heat weld to permanently and seamlessly fuse sections together.
E. Paint game lines using approved game line paint primer and game line paint in strict accordance with the game line paint manufacturer's instructions.
F. Install appropriate threshold plates or transition strips where necessary.

2.0 *CLEANING*

A. Remove all unused materials, tools, and equipment and dispose of any debris properly. Clean the indoor resilient athletic surfacing in accordance with the manufacturer's instructions.

3.6 *PROTECTION*

A. If required, protect the indoor resilient athletic surfacing from damage using coverings approved by the manufacturer until acceptance of work by the customer or their authorized representative.

3.7 *RELATED STANDARDS AND GUIDELINES*

A. ASTM F2170 "Standard Test Method for Determining Relative Humidity In Concrete Floor Slabs Using In-Situ Probes"
B. ASTM F710 "Standard Practice for Preparing Concrete Floors to Receive Resilient Flooring"
C. ACI 302.2R-06 "Guideline for Concrete Slabs that Receive Moisture-Sensitive Flooring Materials"
D. ASTM F2772-11 "Standard Specification for Athletic Performance Properties of Indoor Sports Floor Systems"

END OF SECTION

SECTION 09 65 66
ARCHITECTURAL SPECIFICATIONS FOR INDOOR RESILIENT ATHLETIC SURFACING

PART 1 – GENERAL

1.1 *SECTION INCLUDES*

A. Supply and installation of the indoor resilient multipurpose surfacing
B. Application of the game lines
C. References for the correct construction and preparation of concrete slabs to receive resilient flooring.

1.2 *SUBMITTALS*

A. Product Data:
   1. Manufacturer's promotional brochures, specifications and installation instructions
B. Manufacturer Certifications:
   1. Provide certification that accurately identifies the Original Equipment Manufacturer (OEM) of flooring furnished for this project including manufacturer's name, address and factory location.
   2. Suppliers of private label flooring for this project must identify themselves as such and fully disclose the OEM information listed above.
   3. All "manufacturer" requirements in these specifications must be complied with by the OEM, including warranties, certifications, qualifications, product data, test results, environmental requirements, performance data, etc.
C. Samples:
   1. Submit for selection and approval three (3) sets of the indoor resilient multipurpose surfacing, manufacturer's brochures, samples or sample boards of all of the available colors, textures and styles.
   2. Submit color samples of all the available game line paint colors for selection and approval.
D. Closeout Submittals:
   1. Submit three (3) copies of the indoor resilient multipurpose surfacing and manufacturer's maintenance instructions.
   2. Submit three (3) copies of the material and installation warranties as specified.

1.3 *QUALITY ASSURANCE*

A. Qualifications:
   1. The indoor resilient multipurpose surfacing shall have been actively marketed for a minimum of ten (10) years.
   2. The indoor resilient multipurpose surfacing shall be manufactured in an ISO 9001 certified plant.
   3. The indoor resilient multipurpose surfacing shall be manufactured in an ISO 14001 certified plant.
   4. The indoor resilient multipurpose surfacing supplier shall be an established firm, experienced in the field, and competent in the techniques required by the manufacturer.
   5. The installer of the indoor resilient multipurpose surfacing shall have a minimum of five (5) years of experience in the field installing indoor resilient multipurpose surfacing and have worked on at least five (5) projects of similar size, type and complexity.

B. Certifications:
   1. Installer to submit the indoor resilient athletic surfacing manufacturer's certification attesting that they are a trained installer of the indoor resilient multipurpose surfacing.
   2. The indoor resilient multipurpose surfacing manufacturer to submit official ISO 9001 certification for the facility in which the indoor resilient multipurpose surfacing is manufactured.

C. Testing:
   1. Tests shall be relative for multi-purpose use with certificates from independent testing resources to be made available upon request.
   2. Test results shall be no more than 5 years old and performed according to ASTM standard testing procedures.

1.4 *DELIVERY, STORAGE AND HANDLING*

A. Delivery:
   Material shall not be delivered until all related work is in place and finished and/or proper storage facilities and conditions can be provided and guaranteed stable according to FieldTurf USA, Inc. recommendations.

B. Storage:
   1. Store the material in a secure, clean and dry location.
   2. Maintain temperature between 55° and 85° Fahrenheit.
   3. Store the indoor resilient athletic surfacing rolls in an upright position on a smooth flat surface immediately upon delivery to jobsite.
   4. Rolls shipped in rigid protective cardboard containers can be laid horizontally prior to unpacking and installation.

1.5 *PROJECT/SITE CONDITIONS*

A. It is the responsibility of the general contractor/construction manager to maintain project/site conditions acceptable for the installation of the indoor resilient multipurpose flooring.

B. The area in which the indoor resilient multipurpose surfacing will be installed shall be dry and weather tight. Permanent heat, light and ventilation shall be installed and operable.

C. All other trades shall have completed their work prior to the installation of the resilient athletic flooring. The general contractor or construction manager shall maintain a secure and clean working environment before, during and after the installation.

D. Maintain a stable room temperature of at least 65°F for a minimum of one (1) week prior to, during and thereafter installation.

E. An effective low-permeance vapor barrier is placed directly beneath the concrete subfloor. For "on" or "below grade" installations, it is recommended to provide a permanent vapor barrier resistant to long term hydrostatic pressure/moisture exposure. Protrusions should be sealed to prevent moisture migration into the slab. Moisture should not be allowed to enter the slab after the completed construction.

F. Concrete subfloor surface pH level within the 7 to 11 range dependent upon installation type.

G. Concrete subfloor should be no greater than 1/8" within a 10 ft diameter. This tolerance can be measured in accordance with ASTM E1155. A specified (F_F) of 50 and an (F_L) of 30 should reach this degree of floor flatness and floor level. There is no numerical correlation between F numbers and the deviation from the straight

edge. However, the above specified numbers should achieve a flat floor with minimal deviation in the slab. Reference ACI 117 and ACI 302.1R. The general contractor should provide a certificate of compliance with the above recommendations.

H. Concrete subfloor must be clean and free of all foreign materials or objects including, but not limited to, curing compounds and sealers.

I. Fill cracks, grooves, voids, depressions, and other minor imperfections. Follow the manufacturer's directions. Moveable joints must be treated utilizing specific transitioning joint devices depending upon the architect's recommendations. Follow current ASTM F710 guidelines for the preparation of concrete slabs to receive resilient flooring.

J. Refer to ACI 302.2R "Guidelines for Concrete Slabs that Receive Moisture-Sensitive Flooring Materials" for concrete design and construction.

K. Concrete slab shall be fortified with continual steel reinforcement. Fiber reinforcement alone shall not be considered adequate fortification.

1.6 *WARRANTY*

A. Special Limited Warranty:
   1. Manufacturer's standard form in which manufacturer agrees to repair or replace sports flooring including labor that fails within specified warranty period.

B. Material warranty must be direct from the product manufacturer.
   1. Material warranties from separate or third party insurance providers are not valid.
   2. Material warranties must come from original manufacturer or division thereof. Private label warranties from distributors or brokers are not valid. Supply original point of manufacturing upon request.

C. Failures include, but are not limited to, the following:
   1. Material manufacturing defects.
   2. Surface wear and deterioration to the point of wear-through of wear layer per ASTM F410/ASTM F1303.
   3. Failure due to substrate moisture exposure exceeding 80 percent relative humidity when tested according to ASTM F2170.

D. Warranty Period:
   1. <u>For material defects and surface wear-through:</u> **15** years from date of substantial completion.

E. Installer's Limited Warranty:
   1. Installer's standard form in which installer agrees to repair or replace sports flooring that fails due to poor workmanship or faulty installation within the specified warranty period.
   2. Warranty Period: 2 years from date of substantial completion.

1.7 *ADDITIONAL MATERIALS*

A. Furnish to the owner additional materials containing a total of at least 1% of each different color or design of the indoor resilient athletic surfacing used on the project.

1.8 *LEED™ CERTIFICATION*

A. The indoor resilient athletic surfacing should be able to help this facility to achieve points towards *LEED™ certification.* Flooring system must be certified by FloorScore.
B. LEED categories positively affected by the indoor resilient athletic surfacing:

LEED™ V4 Credit		Contribution
Materials & Resources: Building Product Disclosure & Optimization (BPDO)		
MRc3: Sourcing of Raw Materials	Options 1 & 2	2 Points
MRc4: Material Ingredients	Option 1	1 Point
MRc5: Construction and Demolition Management	Reclamation and Recycling	ReStart® Program
Indoor Environmental Quality		
EQc2: Low-Emitting Materials	TVOC: 0.5 mg/m3 or less	FloorScore®

PART 2 - PRODUCTS

2.1 *MANUFACTURERS*

A. The basis of the design for the indoor resilient multipurpose surfacing is Omnisports 5.5 mm and Lumaflex Elite system as manufactured by Tarkett.
B. All other installation accessories and related components must be either made or approved by the indoor resilient athletic surfacing manufacturer.
C. Other products may be approved as equal if deemed qualified and submitted in accordance with the General Conditions.
D. Test reports confirming compliance from an independent sports laboratory must be provided along with samples, technical data, installation, maintenance, and warranty prior to acceptance as an alternative product.

2.2 *MATERIALS*

A. Omnisports 5.5 mm - Prefabricated sport surface 2.0 mm (0.08″) with wood flooring design and slightly textured embossed surface as supplied by Tarkett.
   1. Embossing of wood design and solid colors must be the same; varying embossing or surface textures will not be allowed.
   2. Printing of wood design shall closely resemble standard wood strip flooring in size, color, board length, and grain appearance.
   3. The wood design shall be protected by a clear layer of pure PVC (Polyvinyl Chloride) and TopClean xp, a factory-applied UV cured urethane treatment.
   4. Intermediate layers shall be fortified with a non-woven fiberglass grid for increased dimensional stability.
   5. The Lumaflex Elite System shall incorporate Lumaflex Elite double tongue and grooved multi-ply engineered panels, force reduction cushion, and appropriate vapor retarder.

B. Physical properties of the indoor resilient athletic surfacing shall conform to the following minimums:

Width	—	6′ 6″ (2 m)
Length	—	85′ (25.9m) approx.
Wear Layer	—	2 mm
Total Thickness	—	5.5 mm
Total Combined Thickness		1 7/16″ (35.7 mm approx.)
Wear Layer	Type 1– Grade 1	ASTM F1303/F410
Rolling Load	PASSED	0.30 (EN 1569 {11/1999})
Force Reduction	PASSED	ASTM F2772 Class 5
Surface Finish Effect	PASSED	ASTM F2772 (80 – 110)
Vertical Deformation	PASSED	ASTM F2772
Ball Rebound	PASSED	ASTM F2772 > 90%
Chemical Resistance	Excellent	ASTM F925
Impact Resistance	PASSED	EN 1717
Abrasion Resistance	PASSED	0.10 (EN ISO 5470-1 {06/1999})
Static Load Limit	PASSED	ASTM F970- Load 175 Lbs
Phthalate-free technology	—	YES
REACH Compliant	—	YES
Heavy Metals	—	NO
ISO 9001	—	YES
ISO 14001	—	YES

1. Color: As available from the indoor resilient athletic surfacing manufacturer's standard range.
2. Hardwood Design Series: A wood look design as available from the indoor resilient athletic surfacing manufacturer's standard range.
3. Texture: Texture to remain consistent between solid colors and wood design when blending colors.

C. Welding Rod: As supplied by the indoor resilient athletic surfacing manufacturer or supplier.
   1. Color to blend with the indoor resilient athletic surfacing color or design.
   2. All seams shall be welded to create a monolithic and impermeable surface.

D. Adhesive: As approved by the indoor resilient athletic surfacing manufacturer.

E. Game Line Paint and Primer: As approved by the indoor resilient athletic surfacing manufacturer.

PART 3 - EXECUTION

3.1 *EXAMINATION*

A. It is the responsibility of the general contractor/construction manager to ensure that project/site conditions are acceptable for the installation of the indoor resilient athletic flooring.
B. Verify that the area in which the indoor resilient athletic surfacing will be installed is dry and weather tight. Verify that permanent heat, light and ventilation are installed and operable.
C. Verify that all other work that could cause damage, dirt and dust or interrupt the normal pace of the indoor resilient athletic flooring installation is completed or suspended.
D. Verify that there is a stable room temperature of at least 65◦F.
E. Verify that there are no foreign materials or objects on the subfloor and that the subfloor is clean and ready for installation.
F. *Concrete Subfloor: moisture content less than 85% RH when tested per ASTM F2170.*
G. Follow Fieldturf USA, Inc. installation recommendations.
H. Do not average the results of the tests. Report all field test results in writing to the General Contractor, Architect, and End User prior to installation.
I. Verify that the concrete subfloor surface pH level is within the 7 - 11 range.
J. Document the results confirming the slab is within manufacturer's tolerances for slab deviation.

3.2 *PREPARATION OF SURFACES*

A. Sand the entire surface of the concrete slab.
B. Sweep the concrete slab so as to remove all dirt and dust. If a sweeping compound is to be used it must be a sweeping compound that does not contain oil or other items that may inhibit the adhesive bond.
C. Slab must be dust free. In the event that dust impairs adhesive bond, priming the slab prior to application of adhesive may be necessary. Follow installation guidelines.
D. Follow OSHA guidelines.

3.3 *INSTALLATION*

A. The installation area shall be closed to all traffic and activity for a period to be set by the indoor resilient athletic surfacing installer. The indoor resilient athletic surfacing installation shall not begin until the installer is familiar with the existing conditions.
B. All necessary precautions should be taken to minimize noise, smell, dust, the use of hazardous materials and any other items that may inconvenience others.
C. Install the indoor resilient athletic surfacing in strict accordance with the indoor resilient athletic surfacing manufacturer's written instructions.
D. Install the indoor resilient athletic surfacing minimizing cross seams. Provide a seam diagram during the submittal process for approval prior to installation. Vinyl Sheet Flooring Seams: Comply with ASTM F 1516. Rout joints and heat weld to permanently and seamlessly fuse sections together.
E. Paint game lines using approved game line paint primer and game line paint in strict accordance with the game line paint manufacturer's instructions.
F. Install appropriate threshold plates or transition strips where necessary.

2.0 *CLEANING*

A. Remove all unused materials, tools, and equipment and dispose of any debris properly. Clean the indoor resilient athletic surfacing in accordance with the manufacturer's instructions.

3.6 *PROTECTION*

A. If required, protect the indoor resilient athletic surfacing from damage using coverings approved by the manufacturer until acceptance of work by the customer or their authorized representative.

3.7 *RELATED STANDARDS AND GUIDELINES*

A. ASTM F2170 "Standard Test Method for Determining Relative Humidity In Concrete Floor Slabs Using In-Situ Probes"
B. ASTM F710 "Standard Practice for Preparing Concrete Floors to Receive Resilient Flooring"
C. ACI 302.2R-06 "Guideline for Concrete Slabs that Receive Moisture-Sensitive Flooring Materials"
D. ASTM F2772-11 "Standard Specification for Athletic Performance Properties of Indoor Sports Floor Systems"

END OF SECTION

SECTION 09 65 66
ARCHITECTURAL SPECIFICATIONS FOR INDOOR RESILIENT ATHLETIC SURFACING

PART 1 – GENERAL

1.1 *SECTION INCLUDES*

A. Supply and installation of the indoor resilient multipurpose surfacing
B. Application of the game lines
C. References for the correct construction and preparation of concrete slabs to receive resilient flooring.

1.2 *SUBMITTALS*

A. Product Data:
   1. Manufacturer's promotional brochures, specifications and installation instructions
B. Manufacturer Certifications:
   1. Provide certification that accurately identifies the Original Equipment Manufacturer (OEM) of flooring furnished for this project including manufacturer's name, address and factory location.
   2. Suppliers of private label flooring for this project must identify themselves as such and fully disclose the OEM information listed above.
   3. All "manufacturer" requirements in these specifications must be complied with by the OEM, including warranties, certifications, qualifications, product data, test results, environmental requirements, performance data, etc.
C. Samples:
   1. Submit for selection and approval three (3) sets of the indoor resilient multipurpose surfacing, manufacturer's brochures, samples or sample boards of all of the available colors, textures and styles.
   2. Submit color samples of all the available game line paint colors for selection and approval.
D. Closeout Submittals:
   1. Submit three (3) copies of the indoor resilient multipurpose surfacing and manufacturer's maintenance instructions.
   2. Submit three (3) copies of the material and installation warranties as specified.

1.3 *QUALITY ASSURANCE*

A. Qualifications:
   1. The indoor resilient multipurpose surfacing shall have been actively marketed for a minimum of ten (10) years.
   2. The indoor resilient multipurpose surfacing shall be manufactured in an ISO 9001 certified plant.
   3. The indoor resilient multipurpose surfacing shall be manufactured in an ISO 14001 certified plant.
   4. The indoor resilient multipurpose surfacing supplier shall be an established firm, experienced in the field, and competent in the techniques required by the manufacturer.
   5. The installer of the indoor resilient multipurpose surfacing shall have a minimum of five (5) years of experience in the field installing indoor resilient multipurpose surfacing and have worked on at least five (5) projects of similar size, type and complexity.

B. Certifications:
   1. Installer to submit the indoor resilient athletic surfacing manufacturer's certification attesting that they are a trained installer of the indoor resilient multipurpose surfacing.
   2. The indoor resilient multipurpose surfacing manufacturer to submit official ISO 9001 certification for the facility in which the indoor resilient multipurpose surfacing is manufactured.

C. Testing:
   1. Tests shall be relative for multi-purpose use with certificates from independent testing resources to be made available upon request.
   2. Test results shall be no more than 5 years old and performed according to ASTM standard testing procedures.

1.4 *DELIVERY, STORAGE AND HANDLING*

A. Delivery:
   Material shall not be delivered until all related work is in place and finished and/or proper storage facilities and conditions can be provided and guaranteed stable according to FieldTurf USA, Inc. recommendations.

B. Storage:
   1. Store the material in a secure, clean and dry location.
   2. Maintain temperature between 55° and 85° Fahrenheit.
   3. Store the indoor resilient athletic surfacing rolls in an upright position on a smooth flat surface immediately upon delivery to jobsite.
   4. Rolls shipped in rigid protective cardboard containers can be laid horizontally prior to unpacking and installation.

1.5 *PROJECT/SITE CONDITIONS*

A. It is the responsibility of the general contractor/construction manager to maintain project/site conditions acceptable for the installation of the indoor resilient multipurpose flooring.

B. The area in which the indoor resilient multipurpose surfacing will be installed shall be dry and weather tight. Permanent heat, light and ventilation shall be installed and operable.

C. All other trades shall have completed their work prior to the installation of the resilient athletic flooring. The general contractor or construction manager shall maintain a secure and clean working environment before, during and after the installation.

D. Maintain a stable room temperature of at least 65°F for a minimum of one (1) week prior to, during and thereafter installation.

E. An effective low-permeance vapor barrier is placed directly beneath the concrete subfloor. For "on" or "below grade" installations, it is recommended to provide a permanent vapor barrier resistant to long term hydrostatic pressure/moisture exposure. Protrusions should be sealed to prevent moisture migration into the slab. Moisture should not be allowed to enter the slab after the completed construction.

F. Concrete subfloor surface pH level within the 7 to 11 range dependent upon installation type.

G. Concrete subfloor should be no greater than 1/8" within a 10 ft diameter. This tolerance can be measured in accordance with ASTM E1155. A specified (F_F) of 50 and an (F_L) of 30 should reach this degree of floor flatness and floor level. There is no numerical correlation between F numbers and the deviation from the straight

edge. However, the above specified numbers should achieve a flat floor with minimal deviation in the slab. Reference ACI 117 and ACI 302.1R. The general contractor should provide a certificate of compliance with the above recommendations.

H. Concrete subfloor must be clean and free of all foreign materials or objects including, but not limited to, curing compounds and sealers.

I. Fill cracks, grooves, voids, depressions, and other minor imperfections. Follow the manufacturer's directions. Moveable joints must be treated utilizing specific transitioning joint devices depending upon the architect's recommendations. Follow current ASTM F710 guidelines for the preparation of concrete slabs to receive resilient flooring.

J. Refer to ACI 302.2R "Guidelines for Concrete Slabs that Receive Moisture-Sensitive Flooring Materials" for concrete design and construction.

K. Concrete slab shall be fortified with continual steel reinforcement. Fiber reinforcement alone shall not be considered adequate fortification.

1.6 *WARRANTY*

A. Special Limited Warranty:
   1. Manufacturer's standard form in which manufacturer agrees to repair or replace sports flooring including labor that fails within specified warranty period.

B. Material warranty must be direct from the product manufacturer.
   1. Material warranties from separate or third party insurance providers are not valid.
   2. Material warranties must come from original manufacturer or division thereof. Private label warranties from distributors or brokers are not valid. Supply original point of manufacturing upon request.

C. Failures include, but are not limited to, the following:
   1. Material manufacturing defects.
   2. Surface wear and deterioration to the point of wear-through of wear layer per ASTM F410/ASTM F1303.
   3. Failure due to substrate moisture exposure exceeding 80 percent relative humidity when tested according to ASTM F2170.

D. Warranty Period:
   1. <u>For material defects and surface wear-through:</u> **15** years from date of substantial completion.

E. Installer's Limited Warranty:
   1. Installer's standard form in which installer agrees to repair or replace sports flooring that fails due to poor workmanship or faulty installation within the specified warranty period.
   2. Warranty Period: 2 years from date of substantial completion.

1.7 *ADDITIONAL MATERIALS*

A. Furnish to the owner additional materials containing a total of at least 1% of each different color or design of the indoor resilient athletic surfacing used on the project.

1.8 *LEED™ CERTIFICATION*

A. The indoor resilient athletic surfacing should be able to help this facility to achieve points towards *LEED™ certification.* Flooring system must be certified by FloorScore.
B. LEED categories positively affected by the indoor resilient athletic surfacing:

LEED™ V4 Credit		Contribution
Materials & Resources: Building Product Disclosure & Optimization (BPDO)		
MRc3: Sourcing of Raw Materials	Options 1 & 2	2 Points
MRc4: Material Ingredients	Option 1	1 Point
MRc5: Construction and Demolition Management	Reclamation and Recycling	ReStart® Program
Indoor Environmental Quality		
EQc2: Low-Emitting Materials	TVOC: 0.5 mg/m3 or less	FloorScore®

PART 2 - PRODUCTS

2.1 *MANUFACTURERS*

A. The basis of the design for the indoor resilient multipurpose surfacing is Omnisports 5.5 mm and Lumaflex Fit system as manufactured by Tarkett.
B. All other installation accessories and related components must be either made or approved by the indoor resilient athletic surfacing manufacturer.
C. Other products may be approved as equal if deemed qualified and submitted in accordance with the General Conditions.
D. Test reports confirming compliance from an independent sports laboratory must be provided along with samples, technical data, installation, maintenance, and warranty prior to acceptance as an alternative product.

2.2 *MATERIALS*

A. Omnisports 5.5 mm - Prefabricated sport surface 2.0 mm (0.08″) with wood flooring design and slightly textured embossed surface as supplied by Tarkett.
   1. Embossing of wood design and solid colors must be the same; varying embossing or surface textures will not be allowed.
   2. Printing of wood design shall closely resemble standard wood strip flooring in size, color, board length, and grain appearance.
   3. The wood design shall be protected by a clear layer of pure PVC (Polyvinyl Chloride) and TopClean xp, a factory-applied UV cured urethane treatment.
   4. Intermediate layers shall be fortified with a non-woven fiberglass grid for increased dimensional stability.
   5. The Lumaflex Fit System shall incorporate Lumaflex Fit double tongue and grooved multi-ply engineered panels, force reduction cushion, and appropriate vapor retarder.

B. Physical properties of the indoor resilient athletic surfacing shall conform to the following minimums:

Width	—	6′ 6″ (2 m)
Length	—	85′ (25.9m) approx.
Wear Layer	—	2 mm
Total Thickness	—	5.5 mm
Total Combined Thickness		48 mm (1.93″)
Wear Layer	Type 1– Grade 1	ASTM F1303/F410
Rolling Load	PASSED	0.30 (EN 1569 {11/1999})
Force Reduction	PASSED	ASTM F2772 Class 5
Surface Finish Effect	PASSED	ASTM F2772 (80 – 110)
Vertical Deformation	PASSED	ASTM F2772
Ball Rebound	PASSED	ASTM F2772 > 90%
Chemical Resistance	Excellent	ASTM F925
Impact Resistance	PASSED	EN 1717
Abrasion Resistance	PASSED	0.10 (EN ISO 5470-1 {06/1999})
Static Load Limit	PASSED	ASTM F970- Load 175 Lbs
Phthalate-free technology	—	YES
REACH Compliant	—	YES
Heavy Metals	—	NO
ISO 9001	—	YES
ISO 14001	—	YES

1. Color: As available from the indoor resilient athletic surfacing manufacturer's standard range.
2. Hardwood Design Series: A wood look design as available from the indoor resilient athletic surfacing manufacturer's standard range.
3. Texture: Texture to remain consistent between solid colors and wood design when blending colors.

C. Welding Rod: As supplied by the indoor resilient athletic surfacing manufacturer or supplier.
   1. Color to blend with the indoor resilient athletic surfacing color or design.
   2. All seams shall be welded to create a monolithic and impermeable surface.

D. Adhesive: As approved by the indoor resilient athletic surfacing manufacturer.

E. Game Line Paint and Primer: As approved by the indoor resilient athletic surfacing manufacturer.

PART 3 - EXECUTION

3.1 *EXAMINATION*

A. It is the responsibility of the general contractor/construction manager to ensure that project/site conditions are acceptable for the installation of the indoor resilient athletic flooring.
B. Verify that the area in which the indoor resilient athletic surfacing will be installed is dry and weather tight. Verify that permanent heat, light and ventilation are installed and operable.
C. Verify that all other work that could cause damage, dirt and dust or interrupt the normal pace of the indoor resilient athletic flooring installation is completed or suspended.
D. Verify that there is a stable room temperature of at least 65◦F.
E. Verify that there are no foreign materials or objects on the subfloor and that the subfloor is clean and ready for installation.
F. *Concrete Subfloor: moisture content less than 85% RH when tested per ASTM F2170.*
G. Follow Fieldturf USA, Inc. installation recommendations.
H. Do not average the results of the tests. Report all field test results in writing to the General Contractor, Architect, and End User prior to installation.
I. Verify that the concrete subfloor surface pH level is within the 7 - 11 range.
J. Document the results confirming the slab is within manufacturer's tolerances for slab deviation.

3.2 *PREPARATION OF SURFACES*

A. Sand the entire surface of the concrete slab.
B. Sweep the concrete slab so as to remove all dirt and dust. If a sweeping compound is to be used it must be a sweeping compound that does not contain oil or other items that may inhibit the adhesive bond.
C. Slab must be dust free. In the event that dust impairs adhesive bond, priming the slab prior to application of adhesive may be necessary. Follow installation guidelines.
D. Follow OSHA guidelines.

3.3 *INSTALLATION*

A. The installation area shall be closed to all traffic and activity for a period to be set by the indoor resilient athletic surfacing installer. The indoor resilient athletic surfacing installation shall not begin until the installer is familiar with the existing conditions.
B. All necessary precautions should be taken to minimize noise, smell, dust, the use of hazardous materials and any other items that may inconvenience others.
C. Install the indoor resilient athletic surfacing in strict accordance with the indoor resilient athletic surfacing manufacturer's written instructions.
D. Install the indoor resilient athletic surfacing minimizing cross seams. Provide a seam diagram during the submittal process for approval prior to installation. Vinyl Sheet Flooring Seams: Comply with ASTM F 1516. Rout joints and heat weld to permanently and seamlessly fuse sections together.
E. Paint game lines using approved game line paint primer and game line paint in strict accordance with the game line paint manufacturer's instructions.
F. Install appropriate threshold plates or transition strips where necessary.

2.0 *CLEANING*

A. Remove all unused materials, tools, and equipment and dispose of any debris properly. Clean the indoor resilient athletic surfacing in accordance with the manufacturer's instructions.

3.6 *PROTECTION*

A. If required, protect the indoor resilient athletic surfacing from damage using coverings approved by the manufacturer until acceptance of work by the customer or their authorized representative.

3.7 *RELATED STANDARDS AND GUIDELINES*

A. ASTM F2170 "Standard Test Method for Determining Relative Humidity In Concrete Floor Slabs Using In-Situ Probes"
B. ASTM F710 "Standard Practice for Preparing Concrete Floors to Receive Resilient Flooring"
C. ACI 302.2R-06 "Guideline for Concrete Slabs that Receive Moisture-Sensitive Flooring Materials"
D. ASTM F2772-11 "Standard Specification for Athletic Performance Properties of Indoor Sports Floor Systems"

END OF SECTION

SECTION 09 65 66
ARCHITECTURAL SPECIFICATIONS FOR INDOOR RESILIENT ATHLETIC SURFACING

PART 1 – GENERAL

1.1 *SECTION INCLUDES*

A. Supply and installation of the indoor resilient multipurpose surfacing
B. Application of the game lines
C. References for the correct construction and preparation of concrete slabs to receive resilient flooring.

1.2 *SUBMITTALS*

A. Product Data:
   1. Manufacturer's promotional brochures, specifications and installation instructions
B. Manufacturer Certifications:
   1. Provide certification that accurately identifies the Original Equipment Manufacturer (OEM) of flooring furnished for this project including manufacturer's name, address and factory location.
   2. Suppliers of private label flooring for this project must identify themselves as such and fully disclose the OEM information listed above.
   3. All "manufacturer" requirements in these specifications must be complied with by the OEM, including warranties, certifications, qualifications, product data, test results, environmental requirements, performance data, etc.
C. Samples:
   1. Submit for selection and approval three (3) sets of the indoor resilient multipurpose surfacing, manufacturer's brochures, samples or sample boards of all of the available colors, textures and styles.
   2. Submit color samples of all the available game line paint colors for selection and approval.
D. Closeout Submittals:
   1. Submit three (3) copies of the indoor resilient multipurpose surfacing and manufacturer's maintenance instructions.
   2. Submit three (3) copies of the material and installation warranties as specified.

1.3 *QUALITY ASSURANCE*

A. Qualifications:
   1. The indoor resilient multipurpose surfacing shall have been actively marketed for a minimum of ten (10) years.
   2. The indoor resilient multipurpose surfacing shall be manufactured in an ISO 9001 certified plant.
   3. The indoor resilient multipurpose surfacing shall be manufactured in an ISO 14001 certified plant.
   4. The indoor resilient multipurpose surfacing supplier shall be an established firm, experienced in the field, and competent in the techniques required by the manufacturer.
   5. The installer of the indoor resilient multipurpose surfacing shall have a minimum of five (5) years of experience in the field installing indoor resilient multipurpose surfacing and have worked on at least five (5) projects of similar size, type and complexity.

B. Certifications:
   1. Installer to submit the indoor resilient athletic surfacing manufacturer's certification attesting that they are a trained installer of the indoor resilient multipurpose surfacing.
   2. The indoor resilient multipurpose surfacing manufacturer to submit official ISO 9001 certification for the facility in which the indoor resilient multipurpose surfacing is manufactured.

C. Testing:
   1. Tests shall be relative for multi-purpose use with certificates from independent testing resources to be made available upon request.
   2. Test results shall be no more than 5 years old and performed according to ASTM standard testing procedures.

1.4 *DELIVERY, STORAGE AND HANDLING*

A. Delivery:
   Material shall not be delivered until all related work is in place and finished and/or proper storage facilities and conditions can be provided and guaranteed stable according to FieldTurf USA, Inc. recommendations.

B. Storage:
   1. Store the material in a secure, clean and dry location.
   2. Maintain temperature between 55° and 85° Fahrenheit.
   3. Store the indoor resilient athletic surfacing rolls in an upright position on a smooth flat surface immediately upon delivery to jobsite.
   4. Rolls shipped in rigid protective cardboard containers can be laid horizontally prior to unpacking and installation.

1.5 *PROJECT/SITE CONDITIONS*

A. It is the responsibility of the general contractor/construction manager to maintain project/site conditions acceptable for the installation of the indoor resilient multipurpose flooring.

B. The area in which the indoor resilient multipurpose surfacing will be installed shall be dry and weather tight. Permanent heat, light and ventilation shall be installed and operable.

C. All other trades shall have completed their work prior to the installation of the resilient athletic flooring. The general contractor or construction manager shall maintain a secure and clean working environment before, during and after the installation.

D. Maintain a stable room temperature of at least 65°F for a minimum of one (1) week prior to, during and thereafter installation.

E. An effective low-permeance vapor barrier is placed directly beneath the concrete subfloor. For "on" or "below grade" installations, it is recommended to provide a permanent vapor barrier resistant to long term hydrostatic pressure/moisture exposure. Protrusions should be sealed to prevent moisture migration into the slab. Moisture should not be allowed to enter the slab after the completed construction.

F. Concrete subfloor surface pH level within the 7 to 11 range dependent upon installation type.

G. Concrete subfloor should be no greater than 1/8" within a 10 ft diameter. This tolerance can be measured in accordance with ASTM E1155. A specified (F_F) of 50 and an (F_L) of 30 should reach this degree of floor flatness and floor level. There is no numerical correlation between F numbers and the deviation from the straight

edge. However, the above specified numbers should achieve a flat floor with minimal deviation in the slab. Reference ACI 117 and ACI 302.1R. The general contractor should provide a certificate of compliance with the above recommendations.

H. Concrete subfloor must be clean and free of all foreign materials or objects including, but not limited to, curing compounds and sealers.

I. Fill cracks, grooves, voids, depressions, and other minor imperfections. Follow the manufacturer's directions. Moveable joints must be treated utilizing specific transitioning joint devices depending upon the architect's recommendations. Follow current ASTM F710 guidelines for the preparation of concrete slabs to receive resilient flooring.

J. Refer to ACI 302.2R "Guidelines for Concrete Slabs that Receive Moisture-Sensitive Flooring Materials" for concrete design and construction.

K. Concrete slab shall be fortified with continual steel reinforcement. Fiber reinforcement alone shall not be considered adequate fortification.

1.6 *WARRANTY*

A. Special Limited Warranty:
   1. Manufacturer's standard form in which manufacturer agrees to repair or replace sports flooring including labor that fails within specified warranty period.

B. Material warranty must be direct from the product manufacturer.
   1. Material warranties from separate or third party insurance providers are not valid.
   2. Material warranties must come from original manufacturer or division thereof. Private label warranties from distributors or brokers are not valid. Supply original point of manufacturing upon request.

C. Failures include, but are not limited to, the following:
   1. Material manufacturing defects.
   2. Surface wear and deterioration to the point of wear-through of wear layer per ASTM F410/ASTM F1303.
   3. Failure due to substrate moisture exposure exceeding 80 percent relative humidity when tested according to ASTM F2170.

D. Warranty Period:
   1. <u>For material defects and surface wear-through:</u> **15** years from date of substantial completion.

E. Installer's Limited Warranty:
   1. Installer's standard form in which installer agrees to repair or replace sports flooring that fails due to poor workmanship or faulty installation within the specified warranty period.
   2. Warranty Period: 2 years from date of substantial completion.

1.7 *ADDITIONAL MATERIALS*

A. Furnish to the owner additional materials containing a total of at least 1% of each different color or design of the indoor resilient athletic surfacing used on the project.

1.8 *LEED™ CERTIFICATION*

A. The indoor resilient athletic surfacing should be able to help this facility to achieve points towards *LEED™ certification.* Flooring system must be certified by FloorScore.
B. LEED categories positively affected by the indoor resilient athletic surfacing:

LEED™ V4 Credit		Contribution
Materials & Resources: Building Product Disclosure & Optimization (BPDO)		
MRc3: Sourcing of Raw Materials	Options 1 & 2	2 Points
MRc4: Material Ingredients	Option 1	1 Point
MRc5: Construction and Demolition Management	Reclamation and Recycling	ReStart® Program
Indoor Environmental Quality		
EQc2: Low-Emitting Materials	TVOC: 0.5 mg/m3 or less	FloorScore®

PART 2 - PRODUCTS

2.1 *MANUFACTURERS*

A. The basis of the design for the indoor resilient multipurpose surfacing is Omnisports 5.5 mm and Lumaflex system as manufactured by Tarkett.
B. All other installation accessories and related components must be either made or approved by the indoor resilient athletic surfacing manufacturer.
C. Other products may be approved as equal if deemed qualified and submitted in accordance with the General Conditions.
D. Test reports confirming compliance from an independent sports laboratory must be provided along with samples, technical data, installation, maintenance, and warranty prior to acceptance as an alternative product.

2.2 *MATERIALS*

A. Omnisports 5.5 mm - Prefabricated sport surface 2.0 mm (0.08″) with wood flooring design and slightly textured embossed surface as supplied by Tarkett.
   1. Embossing of wood design and solid colors must be the same; varying embossing or surface textures will not be allowed.
   2. Printing of wood design shall closely resemble standard wood strip flooring in size, color, board length, and grain appearance.
   3. The wood design shall be protected by a clear layer of pure PVC (Polyvinyl Chloride) and TopClean xp, a factory-applied UV cured urethane treatment.
   4. Intermediate layers shall be fortified with a non-woven fiberglass grid for increased dimensional stability.
   5. The Lumaflex System shall incorporate Lumaflex double tongue and grooved multi-ply engineered panels, force reduction cushion, and appropriate vapor retarder.

B. Physical properties of the indoor resilient athletic surfacing shall conform to the following minimums:

Width	—	6′ 6″ (2 m)
Length	—	85′ (25.9m) approx.
Wear Layer	—	2 mm
Total Thickness	—	5.5 mm
Total Combined Thickness		1 7/16″ (35.7 mm approx.)
Wear Layer	Type 1– Grade 1	ASTM F1303/F410
Rolling Load	PASSED	0.30 (EN 1569 {11/1999})
Force Reduction	PASSED	ASTM F2772 Class 4
Surface Finish Effect	PASSED	ASTM F2772 (80 – 110)
Vertical Deformation	PASSED	ASTM F2772
Ball Rebound	PASSED	ASTM F2772 > 90%
Chemical Resistance	Excellent	ASTM F925
Impact Resistance	PASSED	EN 1717
Abrasion Resistance	PASSED	0.10 (EN ISO 5470-1 {06/1999})
Static Load Limit	PASSED	ASTM F970- Load 175 Lbs
Fire Rating	PASSED	ASTM E648 Class 1
Phthalate-free technology	—	YES
REACH Compliant	—	YES
Lumaflex Foam		GreenGuard Certified
Heavy Metals	—	NO
ISO 9001	—	YES
ISO 14001	—	YES

1. Color: As available from the indoor resilient athletic surfacing manufacturer's standard range.
2. Hardwood Design Series: A wood look design as available from the indoor resilient athletic surfacing manufacturer's standard range.
3. Texture: Texture to remain consistent between solid colors and wood design when blending colors.

C. Welding Rod: As supplied by the indoor resilient athletic surfacing manufacturer or supplier.
   1. Color to blend with the indoor resilient athletic surfacing color or design.
   2. All seams shall be welded to create a monolithic and impermeable surface.

D. Adhesive: As approved by the indoor resilient athletic surfacing manufacturer.

E. Game Line Paint and Primer: As approved by the indoor resilient athletic surfacing manufacturer.

PART 3 - EXECUTION

3.1 *EXAMINATION*

A. It is the responsibility of the general contractor/construction manager to ensure that project/site conditions are acceptable for the installation of the indoor resilient athletic flooring.
B. Verify that the area in which the indoor resilient athletic surfacing will be installed is dry and weather tight. Verify that permanent heat, light and ventilation are installed and operable.
C. Verify that all other work that could cause damage, dirt and dust or interrupt the normal pace of the indoor resilient athletic flooring installation is completed or suspended.
D. Verify that there is a stable room temperature of at least 65◦F.
E. Verify that there are no foreign materials or objects on the subfloor and that the subfloor is clean and ready for installation.
F. *Concrete Subfloor: moisture content less than 85% RH when tested per ASTM F2170.*
G. Follow Fieldturf USA, Inc. installation recommendations.
H. Do not average the results of the tests. Report all field test results in writing to the General Contractor, Architect, and End User prior to installation.
I. Verify that the concrete subfloor surface pH level is within the 7 - 11 range.
J. Document the results confirming the slab is within manufacturer's tolerances for slab deviation.

3.2 *PREPARATION OF SURFACES*

A. Sand the entire surface of the concrete slab.
B. Sweep the concrete slab so as to remove all dirt and dust. If a sweeping compound is to be used it must be a sweeping compound that does not contain oil or other items that may inhibit the adhesive bond.
C. Slab must be dust free. In the event that dust impairs adhesive bond, priming the slab prior to application of adhesive may be necessary. Follow installation guidelines.
D. Follow OSHA guidelines.

3.3 *INSTALLATION*

A. The installation area shall be closed to all traffic and activity for a period to be set by the indoor resilient athletic surfacing installer. The indoor resilient athletic surfacing installation shall not begin until the installer is familiar with the existing conditions.
B. All necessary precautions should be taken to minimize noise, smell, dust, the use of hazardous materials and any other items that may inconvenience others.
C. Install the indoor resilient athletic surfacing in strict accordance with the indoor resilient athletic surfacing manufacturer's written instructions.
D. Install the indoor resilient athletic surfacing minimizing cross seams. Provide a seam diagram during the submittal process for approval prior to installation. Vinyl Sheet Flooring Seams: Comply with ASTM F 1516. Rout joints and heat weld to permanently and seamlessly fuse sections together.
E. Paint game lines using approved game line paint primer and game line paint in strict accordance with the game line paint manufacturer's instructions.
F. Install appropriate threshold plates or transition strips where necessary.

2.0 *CLEANING*

A. Remove all unused materials, tools, and equipment and dispose of any debris properly. Clean the indoor resilient athletic surfacing in accordance with the manufacturer's instructions.

3.6 *PROTECTION*

A. If required, protect the indoor resilient athletic surfacing from damage using coverings approved by the manufacturer until acceptance of work by the customer or their authorized representative.

3.7 *RELATED STANDARDS AND GUIDELINES*

A. ASTM F2170 "Standard Test Method for Determining Relative Humidity In Concrete Floor Slabs Using In-Situ Probes"
B. ASTM F710 "Standard Practice for Preparing Concrete Floors to Receive Resilient Flooring"
C. ACI 302.2R-06 "Guideline for Concrete Slabs that Receive Moisture-Sensitive Flooring Materials"
D. ASTM F2772-11 "Standard Specification for Athletic Performance Properties of Indoor Sports Floor Systems"

END OF SECTION

SECTION 09 65 66
ARCHITECTURAL SPECIFICATIONS FOR INDOOR RESILIENT ATHLETIC SURFACING

PART 1 – GENERAL

1.1 *SECTION INCLUDES*

A. Supply and installation of the indoor resilient multipurpose surfacing
B. Application of the game lines
C. References for the correct construction and preparation of concrete slabs to receive resilient flooring.

1.2 *SUBMITTALS*

A. Product Data:
   1. Manufacturer's promotional brochures, specifications and installation instructions
B. Manufacturer Certifications:
   1. Provide certification that accurately identifies the Original Equipment Manufacturer (OEM) of flooring furnished for this project including manufacturer's name, address and factory location.
   2. Suppliers of private label flooring for this project must identify themselves as such and fully disclose the OEM information listed above.
   3. All "manufacturer" requirements in these specifications must be complied with by the OEM, including warranties, certifications, qualifications, product data, test results, environmental requirements, performance data, etc.
C. Samples:
   1. Submit for selection and approval three (3) sets of the indoor resilient multipurpose surfacing, manufacturer's brochures, samples or sample boards of all of the available colors, textures and styles.
   2. Submit color samples of all the available game line paint colors for selection and approval.
D. Closeout Submittals:
   1. Submit three (3) copies of the indoor resilient multipurpose surfacing and manufacturer's maintenance instructions.
   2. Submit three (3) copies of the material and installation warranties as specified.

1.3 *QUALITY ASSURANCE*

A. Qualifications:
   1. The indoor resilient multipurpose surfacing shall have been actively marketed for a minimum of ten (10) years.
   2. The indoor resilient multipurpose surfacing shall be manufactured in an ISO 9001 certified plant.
   3. The indoor resilient multipurpose surfacing shall be manufactured in an ISO 14001 certified plant.
   4. The indoor resilient multipurpose surfacing supplier shall be an established firm, experienced in the field, and competent in the techniques required by the manufacturer.
   5. The installer of the indoor resilient multipurpose surfacing shall have a minimum of five (5) years of experience in the field installing indoor resilient multipurpose surfacing and have worked on at least five (5) projects of similar size, type and complexity.

B. Certifications:
   1. Installer to submit the indoor resilient athletic surfacing manufacturer's certification attesting that they are a trained installer of the indoor resilient multipurpose surfacing.
   2. The indoor resilient multipurpose surfacing manufacturer to submit official ISO 9001 certification for the facility in which the indoor resilient multipurpose surfacing is manufactured.

C. Testing:
   1. Tests shall be relative for multi-purpose use with certificates from independent testing resources to be made available upon request.
   2. Test results shall be no more than 5 years old and performed according to ASTM standard testing procedures.

1.4 *DELIVERY, STORAGE AND HANDLING*

A. Delivery:
   Material shall not be delivered until all related work is in place and finished and/or proper storage facilities and conditions can be provided and guaranteed stable according to FieldTurf USA, Inc. recommendations.

B. Storage:
   1. Store the material in a secure, clean and dry location.
   2. Maintain temperature between 55° and 85° Fahrenheit.
   3. Store the indoor resilient athletic surfacing rolls in an upright position on a smooth flat surface immediately upon delivery to jobsite.
   4. Rolls shipped in rigid protective cardboard containers can be laid horizontally prior to unpacking and installation.

1.5 *PROJECT/SITE CONDITIONS*

A. It is the responsibility of the general contractor/construction manager to maintain project/site conditions acceptable for the installation of the indoor resilient multipurpose flooring.

B. The area in which the indoor resilient multipurpose surfacing will be installed shall be dry and weather tight. Permanent heat, light and ventilation shall be installed and operable.

C. All other trades shall have completed their work prior to the installation of the resilient athletic flooring. The general contractor or construction manager shall maintain a secure and clean working environment before, during and after the installation.

D. Maintain a stable room temperature of at least 65°F for a minimum of one (1) week prior to, during and thereafter installation.

E. An effective low-permeance vapor barrier is placed directly beneath the concrete subfloor. For "on" or "below grade" installations, it is recommended to provide a permanent vapor barrier resistant to long term hydrostatic pressure/moisture exposure. Protrusions should be sealed to prevent moisture migration into the slab. Moisture should not be allowed to enter the slab after the completed construction.

F. Concrete subfloor surface pH level within the 7 to 11 range dependent upon installation type.

G. Concrete subfloor should be no greater than 1/8" within a 10 ft diameter. This tolerance can be measured in accordance with ASTM E1155. A specified (F_F) of 50 and an (F_L) of 30 should reach this degree of floor flatness and floor level. There is no numerical correlation between F numbers and the deviation from the straight

edge. However, the above specified numbers should achieve a flat floor with minimal deviation in the slab. Reference ACI 117 and ACI 302.1R. The general contractor should provide a certificate of compliance with the above recommendations.

H. Concrete subfloor must be clean and free of all foreign materials or objects including, but not limited to, curing compounds and sealers.

I. Fill cracks, grooves, voids, depressions, and other minor imperfections. Follow the manufacturer's directions. Moveable joints must be treated utilizing specific transitioning joint devices depending upon the architect's recommendations. Follow current ASTM F710 guidelines for the preparation of concrete slabs to receive resilient flooring.

J. Refer to ACI 302.2R "Guidelines for Concrete Slabs that Receive Moisture-Sensitive Flooring Materials" for concrete design and construction.

K. Concrete slab shall be fortified with continual steel reinforcement. Fiber reinforcement alone shall not be considered adequate fortification.

1.6 *WARRANTY*

A. Special Limited Warranty:
   1. Manufacturer's standard form in which manufacturer agrees to repair or replace sports flooring including labor that fails within specified warranty period.

B. Material warranty must be direct from the product manufacturer.
   1. Material warranties from separate or third party insurance providers are not valid.
   2. Material warranties must come from original manufacturer or division thereof. Private label warranties from distributors or brokers are not valid. Supply original point of manufacturing upon request.

C. Failures include, but are not limited to, the following:
   1. Material manufacturing defects.
   2. Surface wear and deterioration to the point of wear-through of wear layer per ASTM F410/ASTM F1303.
   3. Failure due to substrate moisture exposure exceeding 80 percent relative humidity when tested according to ASTM F2170.

D. Warranty Period:
   1. <u>For material defects and surface wear-through:</u> **15** years from date of substantial completion.

E. Installer's Limited Warranty:
   1. Installer's standard form in which installer agrees to repair or replace sports flooring that fails due to poor workmanship or faulty installation within the specified warranty period.
   2. Warranty Period: 2 years from date of substantial completion.

1.7 *ADDITIONAL MATERIALS*

A. Furnish to the owner additional materials containing a total of at least 1% of each different color or design of the indoor resilient athletic surfacing used on the project.

1.8 *LEED™ CERTIFICATION*

A. The indoor resilient athletic surfacing should be able to help this facility to achieve points towards *LEED™ certification.* Flooring system must be certified by FloorScore.
B. LEED categories positively affected by the indoor resilient athletic surfacing:

LEED™ V4 Credit		Contribution
Materials & Resources: Building Product Disclosure & Optimization (BPDO)		
MRc3: Sourcing of Raw Materials	Options 1 & 2	2 Points
MRc4: Material Ingredients	Option 1	1 Point
MRc5: Construction and Demolition Management	Reclamation and Recycling	ReStart® Program
Indoor Environmental Quality		
EQc2: Low-Emitting Materials	TVOC: 0.5 mg/m3 or less	FloorScore®

PART 2 - PRODUCTS

2.1 *MANUFACTURERS*

A. The basis of the design for the indoor resilient multipurpose surfacing is Omnisports 7.1 mm and Lumaflex Elite system as manufactured by Tarkett.
B. All other installation accessories and related components must be either made or approved by the indoor resilient athletic surfacing manufacturer.
C. Other products may be approved as equal if deemed qualified and submitted in accordance with the General Conditions.
D. Test reports confirming compliance from an independent sports laboratory must be provided along with samples, technical data, installation, maintenance, and warranty prior to acceptance as an alternative product.

2.2 *MATERIALS*

A. Omnisports 7.1 mm - Prefabricated sport surface 2.0 mm (0.08″) with wood flooring design and slightly textured embossed surface as supplied by Tarkett.
   1. Embossing of wood design and solid colors must be the same; varying embossing or surface textures will not be allowed.
   2. Printing of wood design shall closely resemble standard wood strip flooring in size, color, board length, and grain appearance.
   3. The wood design shall be protected by a clear layer of pure PVC (Polyvinyl Chloride) and TopClean xp, a factory-applied UV cured urethane treatment.
   4. Intermediate layers shall be fortified with a non-woven fiberglass grid for increased dimensional stability.
   5. The Lumaflex Elite System shall incorporate Lumaflex Elite double tongue and grooved multi-ply engineered panels, force reduction cushion, and appropriate vapor retarder.

B. Physical properties of the indoor resilient athletic surfacing shall conform to the following minimums:

Width	—	6′ 6″ (2 m)
Length	—	85′ (25.9m) approx.
Wear Layer	—	2 mm
Total Thickness	—	7.1 mm
Total Combined Thickness		1 1/2″ (37.1 mm approx.)
Wear Layer	Type 1– Grade 1	ASTM F1303/F410
Rolling Load	PASSED	0.30 (EN 1569 {11/1999})
Force Reduction	PASSED	ASTM F2772 Class 5
Surface Finish Effect	PASSED	ASTM F2772 (80 – 110)
Vertical Deformation	PASSED	ASTM F2772
Ball Rebound	PASSED	ASTM F2772 > 90%
Chemical Resistance	Excellent	ASTM F925
Impact Resistance	PASSED	EN 1717
Abrasion Resistance	PASSED	0.10 (EN ISO 5470-1 {06/1999})
Static Load Limit	PASSED	ASTM F970- Load 175 Lbs
Phthalate-free technology	—	YES
REACH Compliant	—	YES
Heavy Metals	—	NO
ISO 9001	—	YES
ISO 14001	—	YES

1. Color: As available from the indoor resilient athletic surfacing manufacturer's standard range.
2. Hardwood Design Series: A wood look design as available from the indoor resilient athletic surfacing manufacturer's standard range.
3. Texture: Texture to remain consistent between solid colors and wood design when blending colors.

C. Welding Rod: As supplied by the indoor resilient athletic surfacing manufacturer or supplier.
   1. Color to blend with the indoor resilient athletic surfacing color or design.
   2. All seams shall be welded to create a monolithic and impermeable surface.

D. Adhesive: As approved by the indoor resilient athletic surfacing manufacturer.

E. Game Line Paint and Primer: As approved by the indoor resilient athletic surfacing manufacturer.

PART 3 - EXECUTION

3.1 *EXAMINATION*

A. It is the responsibility of the general contractor/construction manager to ensure that project/site conditions are acceptable for the installation of the indoor resilient athletic flooring.
B. Verify that the area in which the indoor resilient athletic surfacing will be installed is dry and weather tight. Verify that permanent heat, light and ventilation are installed and operable.
C. Verify that all other work that could cause damage, dirt and dust or interrupt the normal pace of the indoor resilient athletic flooring installation is completed or suspended.
D. Verify that there is a stable room temperature of at least 65◦F.
E. Verify that there are no foreign materials or objects on the subfloor and that the subfloor is clean and ready for installation.
F. *Concrete Subfloor: moisture content less than 85% RH when tested per ASTM F2170.*
G. Follow Fieldturf USA, Inc. installation recommendations.
H. Do not average the results of the tests. Report all field test results in writing to the General Contractor, Architect, and End User prior to installation.
I. Verify that the concrete subfloor surface pH level is within the 7 - 11 range.
J. Document the results confirming the slab is within manufacturer's tolerances for slab deviation.

3.2 *PREPARATION OF SURFACES*

A. Sand the entire surface of the concrete slab.
B. Sweep the concrete slab so as to remove all dirt and dust. If a sweeping compound is to be used it must be a sweeping compound that does not contain oil or other items that may inhibit the adhesive bond.
C. Slab must be dust free. In the event that dust impairs adhesive bond, priming the slab prior to application of adhesive may be necessary. Follow installation guidelines.
D. Follow OSHA guidelines.

3.3 *INSTALLATION*

A. The installation area shall be closed to all traffic and activity for a period to be set by the indoor resilient athletic surfacing installer. The indoor resilient athletic surfacing installation shall not begin until the installer is familiar with the existing conditions.
B. All necessary precautions should be taken to minimize noise, smell, dust, the use of hazardous materials and any other items that may inconvenience others.
C. Install the indoor resilient athletic surfacing in strict accordance with the indoor resilient athletic surfacing manufacturer's written instructions.
D. Install the indoor resilient athletic surfacing minimizing cross seams. Provide a seam diagram during the submittal process for approval prior to installation. Vinyl Sheet Flooring Seams: Comply with ASTM F 1516. Rout joints and heat weld to permanently and seamlessly fuse sections together.
E. Paint game lines using approved game line paint primer and game line paint in strict accordance with the game line paint manufacturer's instructions.
F. Install appropriate threshold plates or transition strips where necessary.

2.0 *CLEANING*

A. Remove all unused materials, tools, and equipment and dispose of any debris properly. Clean the indoor resilient athletic surfacing in accordance with the manufacturer's instructions.

3.6 *PROTECTION*

A. If required, protect the indoor resilient athletic surfacing from damage using coverings approved by the manufacturer until acceptance of work by the customer or their authorized representative.

3.7 *RELATED STANDARDS AND GUIDELINES*

A. ASTM F2170 "Standard Test Method for Determining Relative Humidity In Concrete Floor Slabs Using In-Situ Probes"
B. ASTM F710 "Standard Practice for Preparing Concrete Floors to Receive Resilient Flooring"
C. ACI 302.2R-06 "Guideline for Concrete Slabs that Receive Moisture-Sensitive Flooring Materials"
D. ASTM F2772-11 "Standard Specification for Athletic Performance Properties of Indoor Sports Floor Systems"

END OF SECTION

SECTION 09 65 66
ARCHITECTURAL SPECIFICATIONS FOR INDOOR RESILIENT ATHLETIC SURFACING

PART 1 – GENERAL

1.1 *SECTION INCLUDES*

A. Supply and installation of the indoor resilient multipurpose surfacing
B. Application of the game lines
C. References for the correct construction and preparation of concrete slabs to receive resilient flooring.

1.2 *SUBMITTALS*

A. Product Data:
   1. Manufacturer's promotional brochures, specifications and installation instructions
B. Manufacturer Certifications:
   1. Provide certification that accurately identifies the Original Equipment Manufacturer (OEM) of flooring furnished for this project including manufacturer's name, address and factory location.
   2. Suppliers of private label flooring for this project must identify themselves as such and fully disclose the OEM information listed above.
   3. All "manufacturer" requirements in these specifications must be complied with by the OEM, including warranties, certifications, qualifications, product data, test results, environmental requirements, performance data, etc.
C. Samples:
   1. Submit for selection and approval three (3) sets of the indoor resilient multipurpose surfacing, manufacturer's brochures, samples or sample boards of all of the available colors, textures and styles.
   2. Submit color samples of all the available game line paint colors for selection and approval.
D. Closeout Submittals:
   1. Submit three (3) copies of the indoor resilient multipurpose surfacing and manufacturer's maintenance instructions.
   2. Submit three (3) copies of the material and installation warranties as specified.

1.3 *QUALITY ASSURANCE*

A. Qualifications:
   1. The indoor resilient multipurpose surfacing shall have been actively marketed for a minimum of ten (10) years.
   2. The indoor resilient multipurpose surfacing shall be manufactured in an ISO 9001 certified plant.
   3. The indoor resilient multipurpose surfacing shall be manufactured in an ISO 14001 certified plant.
   4. The indoor resilient multipurpose surfacing supplier shall be an established firm, experienced in the field, and competent in the techniques required by the manufacturer.
   5. The installer of the indoor resilient multipurpose surfacing shall have a minimum of five (5) years of experience in the field installing indoor resilient multipurpose surfacing and have worked on at least five (5) projects of similar size, type and complexity.

B. Certifications:
   1. Installer to submit the indoor resilient athletic surfacing manufacturer's certification attesting that they are a trained installer of the indoor resilient multipurpose surfacing.
   2. The indoor resilient multipurpose surfacing manufacturer to submit official ISO 9001 certification for the facility in which the indoor resilient multipurpose surfacing is manufactured.

C. Testing:
   1. Tests shall be relative for multi-purpose use with certificates from independent testing resources to be made available upon request.
   2. Test results shall be no more than 5 years old and performed according to ASTM standard testing procedures.

1.4 *DELIVERY, STORAGE AND HANDLING*

A. Delivery:
   Material shall not be delivered until all related work is in place and finished and/or proper storage facilities and conditions can be provided and guaranteed stable according to FieldTurf USA, Inc. recommendations.

B. Storage:
   1. Store the material in a secure, clean and dry location.
   2. Maintain temperature between 55° and 85° Fahrenheit.
   3. Store the indoor resilient athletic surfacing rolls in an upright position on a smooth flat surface immediately upon delivery to jobsite.
   4. Rolls shipped in rigid protective cardboard containers can be laid horizontally prior to unpacking and installation.

1.5 *PROJECT/SITE CONDITIONS*

A. It is the responsibility of the general contractor/construction manager to maintain project/site conditions acceptable for the installation of the indoor resilient multipurpose flooring.

B. The area in which the indoor resilient multipurpose surfacing will be installed shall be dry and weather tight. Permanent heat, light and ventilation shall be installed and operable.

C. All other trades shall have completed their work prior to the installation of the resilient athletic flooring. The general contractor or construction manager shall maintain a secure and clean working environment before, during and after the installation.

D. Maintain a stable room temperature of at least 65°F for a minimum of one (1) week prior to, during and thereafter installation.

E. An effective low-permeance vapor barrier is placed directly beneath the concrete subfloor. For "on" or "below grade" installations, it is recommended to provide a permanent vapor barrier resistant to long term hydrostatic pressure/moisture exposure. Protrusions should be sealed to prevent moisture migration into the slab. Moisture should not be allowed to enter the slab after the completed construction.

F. Concrete subfloor surface pH level within the 7 to 11 range dependent upon installation type.

G. Concrete subfloor should be no greater than 1/8" within a 10 ft diameter. This tolerance can be measured in accordance with ASTM E1155. A specified (F_F) of 50 and an (F_L) of 30 should reach this degree of floor flatness and floor level. There is no numerical correlation between F numbers and the deviation from the straight

edge. However, the above specified numbers should achieve a flat floor with minimal deviation in the slab. Reference ACI 117 and ACI 302.1R. The general contractor should provide a certificate of compliance with the above recommendations.

H. Concrete subfloor must be clean and free of all foreign materials or objects including, but not limited to, curing compounds and sealers.

I. Fill cracks, grooves, voids, depressions, and other minor imperfections. Follow the manufacturer's directions. Moveable joints must be treated utilizing specific transitioning joint devices depending upon the architect's recommendations. Follow current ASTM F710 guidelines for the preparation of concrete slabs to receive resilient flooring.

J. Refer to ACI 302.2R "Guidelines for Concrete Slabs that Receive Moisture-Sensitive Flooring Materials" for concrete design and construction.

K. Concrete slab shall be fortified with continual steel reinforcement. Fiber reinforcement alone shall not be considered adequate fortification.

1.6 *WARRANTY*

A. Special Limited Warranty:
   1. Manufacturer's standard form in which manufacturer agrees to repair or replace sports flooring including labor that fails within specified warranty period.

B. Material warranty must be direct from the product manufacturer.
   1. Material warranties from separate or third party insurance providers are not valid.
   2. Material warranties must come from original manufacturer or division thereof. Private label warranties from distributors or brokers are not valid. Supply original point of manufacturing upon request.

C. Failures include, but are not limited to, the following:
   1. Material manufacturing defects.
   2. Surface wear and deterioration to the point of wear-through of wear layer per ASTM F410/ASTM F1303.
   3. Failure due to substrate moisture exposure exceeding 80 percent relative humidity when tested according to ASTM F2170.

D. Warranty Period:
   1. <u>For material defects and surface wear-through:</u> **15** years from date of substantial completion.

E. Installer's Limited Warranty:
   1. Installer's standard form in which installer agrees to repair or replace sports flooring that fails due to poor workmanship or faulty installation within the specified warranty period.
   2. Warranty Period: 2 years from date of substantial completion.

1.7 *ADDITIONAL MATERIALS*

A. Furnish to the owner additional materials containing a total of at least 1% of each different color or design of the indoor resilient athletic surfacing used on the project.

1.8 *LEED™ CERTIFICATION*

A. The indoor resilient athletic surfacing should be able to help this facility to achieve points towards *LEED™ certification.* Flooring system must be certified by FloorScore.
B. LEED categories positively affected by the indoor resilient athletic surfacing:

LEED™ V4 Credit		Contribution
Materials & Resources: Building Product Disclosure & Optimization (BPDO)		
MRc3: Sourcing of Raw Materials	Options 1 & 2	2 Points
MRc4: Material Ingredients	Option 1	1 Point
MRc5: Construction and Demolition Management	Reclamation and Recycling	ReStart® Program
Indoor Environmental Quality		
EQc2: Low-Emitting Materials	TVOC: 0.5 mg/m3 or less	FloorScore®

PART 2 - PRODUCTS

2.1 *MANUFACTURERS*

A. The basis of the design for the indoor resilient multipurpose surfacing is Omnisports 7.1 mm and Lumaflex Fit system as manufactured by Tarkett.
B. All other installation accessories and related components must be either made or approved by the indoor resilient athletic surfacing manufacturer.
C. Other products may be approved as equal if deemed qualified and submitted in accordance with the General Conditions.
D. Test reports confirming compliance from an independent sports laboratory must be provided along with samples, technical data, installation, maintenance, and warranty prior to acceptance as an alternative product.

2.2 *MATERIALS*

A. Omnisports 7.1 mm - Prefabricated sport surface 2.0 mm (0.08″) with wood flooring design and slightly textured embossed surface as supplied by Tarkett.
   1. Embossing of wood design and solid colors must be the same; varying embossing or surface textures will not be allowed.
   2. Printing of wood design shall closely resemble standard wood strip flooring in size, color, board length, and grain appearance.
   3. The wood design shall be protected by a clear layer of pure PVC (Polyvinyl Chloride) and TopClean xp, a factory-applied UV cured urethane treatment.
   4. Intermediate layers shall be fortified with a non-woven fiberglass grid for increased dimensional stability.
   5. The Lumaflex Fit System shall incorporate Lumaflex Fit double tongue and grooved multi-ply engineered panels, force reduction cushion, and appropriate vapor retarder.

B. Physical properties of the indoor resilient athletic surfacing shall conform to the following minimums:

Width	—	6′ 6″ (2 m)
Length	—	85′ (25.9m) approx.
Wear Layer	—	2 mm
Total Thickness	—	7.1 mm
Total Combined Thickness		51mm (2″)
Wear Layer	Type 1– Grade 1	ASTM F1303/F410
Rolling Load	PASSED	0.30 (EN 1569 {11/1999})
Force Reduction	PASSED	ASTM F2772 Class 5
Surface Finish Effect	PASSED	ASTM F2772 (80 – 110)
Vertical Deformation	PASSED	ASTM F2772
Ball Rebound	PASSED	ASTM F2772 > 90%
Chemical Resistance	Excellent	ASTM F925
Impact Resistance	PASSED	EN 1717
Abrasion Resistance	PASSED	0.10 (EN ISO 5470-1 {06/1999})
Static Load Limit	PASSED	ASTM F970- Load 175 Lbs
Phthalate-free technology	—	YES
REACH Compliant	—	YES
Heavy Metals	—	NO
ISO 9001	—	YES
ISO 14001	—	YES

1. Color: As available from the indoor resilient athletic surfacing manufacturer's standard range.
2. Hardwood Design Series: A wood look design as available from the indoor resilient athletic surfacing manufacturer's standard range.
3. Texture: Texture to remain consistent between solid colors and wood design when blending colors.

C. Welding Rod: As supplied by the indoor resilient athletic surfacing manufacturer or supplier.
   1. Color to blend with the indoor resilient athletic surfacing color or design.
   2. All seams shall be welded to create a monolithic and impermeable surface.

D. Adhesive: As approved by the indoor resilient athletic surfacing manufacturer.

E. Game Line Paint and Primer: As approved by the indoor resilient athletic surfacing manufacturer.

PART 3 - EXECUTION

3.1 *EXAMINATION*

A. It is the responsibility of the general contractor/construction manager to ensure that project/site conditions are acceptable for the installation of the indoor resilient athletic flooring.
B. Verify that the area in which the indoor resilient athletic surfacing will be installed is dry and weather tight. Verify that permanent heat, light and ventilation are installed and operable.
C. Verify that all other work that could cause damage, dirt and dust or interrupt the normal pace of the indoor resilient athletic flooring installation is completed or suspended.
D. Verify that there is a stable room temperature of at least 65◦F.
E. Verify that there are no foreign materials or objects on the subfloor and that the subfloor is clean and ready for installation.
F. *Concrete Subfloor: moisture content less than 85% RH when tested per ASTM F2170.*
G. Follow Fieldturf USA, Inc. installation recommendations.
H. Do not average the results of the tests. Report all field test results in writing to the General Contractor, Architect, and End User prior to installation.
I. Verify that the concrete subfloor surface pH level is within the 7 - 11 range.
J. Document the results confirming the slab is within manufacturer's tolerances for slab deviation.

3.2 *PREPARATION OF SURFACES*

A. Sand the entire surface of the concrete slab.
B. Sweep the concrete slab so as to remove all dirt and dust. If a sweeping compound is to be used it must be a sweeping compound that does not contain oil or other items that may inhibit the adhesive bond.
C. Slab must be dust free. In the event that dust impairs adhesive bond, priming the slab prior to application of adhesive may be necessary. Follow installation guidelines.
D. Follow OSHA guidelines.

3.3 *INSTALLATION*

A. The installation area shall be closed to all traffic and activity for a period to be set by the indoor resilient athletic surfacing installer. The indoor resilient athletic surfacing installation shall not begin until the installer is familiar with the existing conditions.
B. All necessary precautions should be taken to minimize noise, smell, dust, the use of hazardous materials and any other items that may inconvenience others.
C. Install the indoor resilient athletic surfacing in strict accordance with the indoor resilient athletic surfacing manufacturer's written instructions.
D. Install the indoor resilient athletic surfacing minimizing cross seams. Provide a seam diagram during the submittal process for approval prior to installation. Vinyl Sheet Flooring Seams: Comply with ASTM F 1516. Rout joints and heat weld to permanently and seamlessly fuse sections together.
E. Paint game lines using approved game line paint primer and game line paint in strict accordance with the game line paint manufacturer's instructions.
F. Install appropriate threshold plates or transition strips where necessary.

2.0 *CLEANING*

A. Remove all unused materials, tools, and equipment and dispose of any debris properly. Clean the indoor resilient athletic surfacing in accordance with the manufacturer's instructions.

3.6 *PROTECTION*

A. If required, protect the indoor resilient athletic surfacing from damage using coverings approved by the manufacturer until acceptance of work by the customer or their authorized representative.

3.7 *RELATED STANDARDS AND GUIDELINES*

A. ASTM F2170 "Standard Test Method for Determining Relative Humidity In Concrete Floor Slabs Using In-Situ Probes"
B. ASTM F710 "Standard Practice for Preparing Concrete Floors to Receive Resilient Flooring"
C. ACI 302.2R-06 "Guideline for Concrete Slabs that Receive Moisture-Sensitive Flooring Materials"
D. ASTM F2772-11 "Standard Specification for Athletic Performance Properties of Indoor Sports Floor Systems"

END OF SECTION

SECTION 09 65 66
ARCHITECTURAL SPECIFICATIONS FOR INDOOR RESILIENT ATHLETIC SURFACING

PART 1 – GENERAL

1.1 *SECTION INCLUDES*

A. Supply and installation of the indoor resilient multipurpose surfacing
B. Application of the game lines
C. References for the correct construction and preparation of concrete slabs to receive resilient flooring.

1.2 *SUBMITTALS*

A. Product Data:
   1. Manufacturer's promotional brochures, specifications and installation instructions
B. Manufacturer Certifications:
   1. Provide certification that accurately identifies the Original Equipment Manufacturer (OEM) of flooring furnished for this project including manufacturer's name, address and factory location.
   2. Suppliers of private label flooring for this project must identify themselves as such and fully disclose the OEM information listed above.
   3. All "manufacturer" requirements in these specifications must be complied with by the OEM, including warranties, certifications, qualifications, product data, test results, environmental requirements, performance data, etc.
C. Samples:
   1. Submit for selection and approval three (3) sets of the indoor resilient multipurpose surfacing, manufacturer's brochures, samples or sample boards of all of the available colors, textures and styles.
   2. Submit color samples of all the available game line paint colors for selection and approval.
D. Closeout Submittals:
   1. Submit three (3) copies of the indoor resilient multipurpose surfacing and manufacturer's maintenance instructions.
   2. Submit three (3) copies of the material and installation warranties as specified.

1.3 *QUALITY ASSURANCE*

A. Qualifications:
   1. The indoor resilient multipurpose surfacing shall have been actively marketed for a minimum of ten (10) years.
   2. The indoor resilient multipurpose surfacing shall be manufactured in an ISO 9001 certified plant.
   3. The indoor resilient multipurpose surfacing shall be manufactured in an ISO 14001 certified plant.
   4. The indoor resilient multipurpose surfacing supplier shall be an established firm, experienced in the field, and competent in the techniques required by the manufacturer.
   5. The installer of the indoor resilient multipurpose surfacing shall have a minimum of five (5) years of experience in the field installing indoor resilient multipurpose surfacing and have worked on at least five (5) projects of similar size, type and complexity.

B. Certifications:
   1. Installer to submit the indoor resilient athletic surfacing manufacturer's certification attesting that they are a trained installer of the indoor resilient multipurpose surfacing.
   2. The indoor resilient multipurpose surfacing manufacturer to submit official ISO 9001 certification for the facility in which the indoor resilient multipurpose surfacing is manufactured.

C. Testing:
   1. Tests shall be relative for multi-purpose use with certificates from independent testing resources to be made available upon request.
   2. Test results shall be no more than 5 years old and performed according to ASTM standard testing procedures.

1.4 *DELIVERY, STORAGE AND HANDLING*

A. Delivery:
   Material shall not be delivered until all related work is in place and finished and/or proper storage facilities and conditions can be provided and guaranteed stable according to FieldTurf USA, Inc. recommendations.

B. Storage:
   1. Store the material in a secure, clean and dry location.
   2. Maintain temperature between 55° and 85° Fahrenheit.
   3. Store the indoor resilient athletic surfacing rolls in an upright position on a smooth flat surface immediately upon delivery to jobsite.
   4. Rolls shipped in rigid protective cardboard containers can be laid horizontally prior to unpacking and installation.

1.5 *PROJECT/SITE CONDITIONS*

A. It is the responsibility of the general contractor/construction manager to maintain project/site conditions acceptable for the installation of the indoor resilient multipurpose flooring.

B. The area in which the indoor resilient multipurpose surfacing will be installed shall be dry and weather tight. Permanent heat, light and ventilation shall be installed and operable.

C. All other trades shall have completed their work prior to the installation of the resilient athletic flooring. The general contractor or construction manager shall maintain a secure and clean working environment before, during and after the installation.

D. Maintain a stable room temperature of at least 65°F for a minimum of one (1) week prior to, during and thereafter installation.

E. An effective low-permeance vapor barrier is placed directly beneath the concrete subfloor. For "on" or "below grade" installations, it is recommended to provide a permanent vapor barrier resistant to long term hydrostatic pressure/moisture exposure. Protrusions should be sealed to prevent moisture migration into the slab. Moisture should not be allowed to enter the slab after the completed construction.

F. Concrete subfloor surface pH level within the 7 to 11 range dependent upon installation type.

G. Concrete subfloor should be no greater than 1/8" within a 10 ft diameter. This tolerance can be measured in accordance with ASTM E1155. A specified (F_F) of 50 and an (F_L) of 30 should reach this degree of floor flatness and floor level. There is no numerical correlation between F numbers and the deviation from the straight

edge. However, the above specified numbers should achieve a flat floor with minimal deviation in the slab. Reference ACI 117 and ACI 302.1R. The general contractor should provide a certificate of compliance with the above recommendations.

H. Concrete subfloor must be clean and free of all foreign materials or objects including, but not limited to, curing compounds and sealers.

I. Fill cracks, grooves, voids, depressions, and other minor imperfections. Follow the manufacturer's directions. Moveable joints must be treated utilizing specific transitioning joint devices depending upon the architect's recommendations. Follow current ASTM F710 guidelines for the preparation of concrete slabs to receive resilient flooring.

J. Refer to ACI 302.2R "Guidelines for Concrete Slabs that Receive Moisture-Sensitive Flooring Materials" for concrete design and construction.

K. Concrete slab shall be fortified with continual steel reinforcement. Fiber reinforcement alone shall not be considered adequate fortification.

1.6 *WARRANTY*

A. Special Limited Warranty:
   1. Manufacturer's standard form in which manufacturer agrees to repair or replace sports flooring including labor that fails within specified warranty period.

B. Material warranty must be direct from the product manufacturer.
   1. Material warranties from separate or third party insurance providers are not valid.
   2. Material warranties must come from original manufacturer or division thereof. Private label warranties from distributors or brokers are not valid. Supply original point of manufacturing upon request.

C. Failures include, but are not limited to, the following:
   1. Material manufacturing defects.
   2. Surface wear and deterioration to the point of wear-through of wear layer per ASTM F410/ASTM F1303.
   3. Failure due to substrate moisture exposure exceeding 80 percent relative humidity when tested according to ASTM F2170.

D. Warranty Period:
   1. <u>For material defects and surface wear-through:</u> **15** years from date of substantial completion.

E. Installer's Limited Warranty:
   1. Installer's standard form in which installer agrees to repair or replace sports flooring that fails due to poor workmanship or faulty installation within the specified warranty period.
   2. Warranty Period: 2 years from date of substantial completion.

1.7 *ADDITIONAL MATERIALS*

A. Furnish to the owner additional materials containing a total of at least 1% of each different color or design of the indoor resilient athletic surfacing used on the project.

1.8 *LEED™ CERTIFICATION*

A. The indoor resilient athletic surfacing should be able to help this facility to achieve points towards *LEED™ certification.* Flooring system must be certified by FloorScore.
B. LEED categories positively affected by the indoor resilient athletic surfacing:

LEED™ V4 Credit		Contribution
Materials & Resources: Building Product Disclosure & Optimization (BPDO)		
MRc3: Sourcing of Raw Materials	Options 1 & 2	2 Points
MRc4: Material Ingredients	Option 1	1 Point
MRc5: Construction and Demolition Management	Reclamation and Recycling	ReStart® Program
Indoor Environmental Quality		
EQc2: Low-Emitting Materials	TVOC: 0.5 mg/m3 or less	FloorScore®

PART 2 - PRODUCTS

2.1 *MANUFACTURERS*

A. The basis of the design for the indoor resilient multipurpose surfacing is Omnisports 7.1 mm and Lumaflex system as manufactured by Tarkett.
B. All other installation accessories and related components must be either made or approved by the indoor resilient athletic surfacing manufacturer.
C. Other products may be approved as equal if deemed qualified and submitted in accordance with the General Conditions.
D. Test reports confirming compliance from an independent sports laboratory must be provided along with samples, technical data, installation, maintenance, and warranty prior to acceptance as an alternative product.

2.2 *MATERIALS*

A. Omnisports 7.1 mm - Prefabricated sport surface 2.0 mm (0.08″) with wood flooring design and slightly textured embossed surface as supplied by Tarkett.
   1. Embossing of wood design and solid colors must be the same; varying embossing or surface textures will not be allowed.
   2. Printing of wood design shall closely resemble standard wood strip flooring in size, color, board length, and grain appearance.
   3. The wood design shall be protected by a clear layer of pure PVC (Polyvinyl Chloride) and TopClean xp, a factory-applied UV cured urethane treatment.
   4. Intermediate layers shall be fortified with a non-woven fiberglass grid for increased dimensional stability.
   5. The Lumaflex System shall incorporate Lumaflex double tongue and grooved multi-ply engineered panels, force reduction cushion, and appropriate vapor retarder.

B. Physical properties of the indoor resilient athletic surfacing shall conform to the following minimums:

Width	—	6′ 6″ (2 m)
Length	—	85′ (25.9m) approx.
Wear Layer	—	2 mm
Total Thickness	—	7.1 mm
Total Combined Thickness		1 1/2″ (37.1 mm approx.)
Wear Layer	Type 1– Grade 1	ASTM F1303/F410
Rolling Load	PASSED	0.30 (EN 1569 {11/1999})
Force Reduction	PASSED	ASTM F2772 Class 4
Surface Finish Effect	PASSED	ASTM F2772 (80 – 110)
Vertical Deformation	PASSED	ASTM F2772
Ball Rebound	PASSED	ASTM F2772 > 90%
Chemical Resistance	Excellent	ASTM F925
Impact Resistance	PASSED	EN 1717
Abrasion Resistance	PASSED	0.10 (EN ISO 5470-1 {06/1999})
Static Load Limit	PASSED	ASTM F970- Load 175 Lbs
Fire Rating	PASSED	ASTM E648 Class 1
Phthalate-free technology	—	YES
Lumaflex Foam		GreenGuard Certified
REACH Compliant	—	YES
Heavy Metals	—	NO
ISO 9001	—	YES
ISO 14001	—	YES

1. Color: As available from the indoor resilient athletic surfacing manufacturer's standard range.
2. Hardwood Design Series: A wood look design as available from the indoor resilient athletic surfacing manufacturer's standard range.
3. Texture: Texture to remain consistent between solid colors and wood design when blending colors.

C. Welding Rod: As supplied by the indoor resilient athletic surfacing manufacturer or supplier.
   1. Color to blend with the indoor resilient athletic surfacing color or design.
   2. All seams shall be welded to create a monolithic and impermeable surface.

D. Adhesive: As approved by the indoor resilient athletic surfacing manufacturer.

E. Game Line Paint and Primer: As approved by the indoor resilient athletic surfacing manufacturer.

PART 3 - EXECUTION

3.1 *EXAMINATION*

A. It is the responsibility of the general contractor/construction manager to ensure that project/site conditions are acceptable for the installation of the indoor resilient athletic flooring.
B. Verify that the area in which the indoor resilient athletic surfacing will be installed is dry and weather tight. Verify that permanent heat, light and ventilation are installed and operable.
C. Verify that all other work that could cause damage, dirt and dust or interrupt the normal pace of the indoor resilient athletic flooring installation is completed or suspended.
D. Verify that there is a stable room temperature of at least 65◦F.
E. Verify that there are no foreign materials or objects on the subfloor and that the subfloor is clean and ready for installation.
F. *Concrete Subfloor: moisture content less than 85% RH when tested per ASTM F2170.*
G. Follow Fieldturf USA, Inc. installation recommendations.
H. Do not average the results of the tests. Report all field test results in writing to the General Contractor, Architect, and End User prior to installation.
I. Verify that the concrete subfloor surface pH level is within the 7 - 11 range.
J. Document the results confirming the slab is within manufacturer's tolerances for slab deviation.

3.2 *PREPARATION OF SURFACES*

A. Sand the entire surface of the concrete slab.
B. Sweep the concrete slab so as to remove all dirt and dust. If a sweeping compound is to be used it must be a sweeping compound that does not contain oil or other items that may inhibit the adhesive bond.
C. Slab must be dust free. In the event that dust impairs adhesive bond, priming the slab prior to application of adhesive may be necessary. Follow installation guidelines.
D. Follow OSHA guidelines.

3.3 *INSTALLATION*

A. The installation area shall be closed to all traffic and activity for a period to be set by the indoor resilient athletic surfacing installer. The indoor resilient athletic surfacing installation shall not begin until the installer is familiar with the existing conditions.
B. All necessary precautions should be taken to minimize noise, smell, dust, the use of hazardous materials and any other items that may inconvenience others.
C. Install the indoor resilient athletic surfacing in strict accordance with the indoor resilient athletic surfacing manufacturer's written instructions.
D. Install the indoor resilient athletic surfacing minimizing cross seams. Provide a seam diagram during the submittal process for approval prior to installation. Vinyl Sheet Flooring Seams: Comply with ASTM F 1516. Rout joints and heat weld to permanently and seamlessly fuse sections together.
E. Paint game lines using approved game line paint primer and game line paint in strict accordance with the game line paint manufacturer's instructions.
F. Install appropriate threshold plates or transition strips where necessary.

2.0 *CLEANING*

A. Remove all unused materials, tools, and equipment and dispose of any debris properly. Clean the indoor resilient athletic surfacing in accordance with the manufacturer's instructions.

3.6 *PROTECTION*

A. If required, protect the indoor resilient athletic surfacing from damage using coverings approved by the manufacturer until acceptance of work by the customer or their authorized representative.

3.7 *RELATED STANDARDS AND GUIDELINES*

A. ASTM F2170 "Standard Test Method for Determining Relative Humidity In Concrete Floor Slabs Using In-Situ Probes"
B. ASTM F710 "Standard Practice for Preparing Concrete Floors to Receive Resilient Flooring"
C. ACI 302.2R-06 "Guideline for Concrete Slabs that Receive Moisture-Sensitive Flooring Materials"
D. ASTM F2772-11 "Standard Specification for Athletic Performance Properties of Indoor Sports Floor Systems"

END OF SECTION

SECTION 09 65 66
ARCHITECTURAL SPECIFICATIONS FOR INDOOR RESILIENT ATHLETIC SURFACING

PART 1 – GENERAL

1.1 *SECTION INCLUDES*

A. Supply and installation of the indoor resilient multipurpose surfacing
B. Application of the game lines
C. References for the correct construction and preparation of concrete slabs to receive resilient flooring.

1.2 *SUBMITTALS*

A. Product Data:
   1. Manufacturer's promotional brochures, specifications and installation instructions
B. Manufacturer Certifications:
   1. Provide certification that accurately identifies the Original Equipment Manufacturer (OEM) of flooring furnished for this project including manufacturer's name, address and factory location.
   2. Suppliers of private label flooring for this project must identify themselves as such and fully disclose the OEM information listed above.
   3. All "manufacturer" requirements in these specifications must be complied with by the OEM, including warranties, certifications, qualifications, product data, test results, environmental requirements, performance data, etc.
C. Samples:
   1. Submit for selection and approval three (3) sets of the indoor resilient multipurpose surfacing, manufacturer's brochures, samples or sample boards of all of the available colors, textures and styles.
   2. Submit color samples of all the available game line paint colors for selection and approval.
D. Closeout Submittals:
   1. Submit three (3) copies of the indoor resilient multipurpose surfacing and manufacturer's maintenance instructions.
   2. Submit three (3) copies of the material and installation warranties as specified.

1.3 *QUALITY ASSURANCE*

A. Qualifications:
   1. The indoor resilient multipurpose surfacing shall have been actively marketed for a minimum of ten (10) years.
   2. The indoor resilient multipurpose surfacing shall be manufactured in an ISO 9001 certified plant.
   3. The indoor resilient multipurpose surfacing shall be manufactured in an ISO 14001 certified plant.
   4. The indoor resilient multipurpose surfacing supplier shall be an established firm, experienced in the field, and competent in the techniques required by the manufacturer.
   5. The installer of the indoor resilient multipurpose surfacing shall have a minimum of five (5) years of experience in the field installing indoor resilient multipurpose surfacing and have worked on at least five (5) projects of similar size, type and complexity.

B. Certifications:
   1. Installer to submit the indoor resilient athletic surfacing manufacturer's certification attesting that they are a trained installer of the indoor resilient multipurpose surfacing.
   2. The indoor resilient multipurpose surfacing manufacturer to submit official ISO 9001 certification for the facility in which the indoor resilient multipurpose surfacing is manufactured.

C. Testing:
   1. Tests shall be relative for multi-purpose use with certificates from independent testing resources to be made available upon request.
   2. Test results shall be no more than 5 years old and performed according to ASTM standard testing procedures.

1.4 *DELIVERY, STORAGE AND HANDLING*

A. Delivery:
   Material shall not be delivered until all related work is in place and finished and/or proper storage facilities and conditions can be provided and guaranteed stable according to FieldTurf USA, Inc. recommendations.

B. Storage:
   1. Store the material in a secure, clean and dry location.
   2. Maintain temperature between 55° and 85° Fahrenheit.
   3. Store the indoor resilient athletic surfacing rolls in an upright position on a smooth flat surface immediately upon delivery to jobsite.
   4. Rolls shipped in rigid protective cardboard containers can be laid horizontally prior to unpacking and installation.

1.5 *PROJECT/SITE CONDITIONS*

A. It is the responsibility of the general contractor/construction manager to maintain project/site conditions acceptable for the installation of the indoor resilient multipurpose flooring.

B. The area in which the indoor resilient multipurpose surfacing will be installed shall be dry and weather tight. Permanent heat, light and ventilation shall be installed and operable.

C. All other trades shall have completed their work prior to the installation of the resilient athletic flooring. The general contractor or construction manager shall maintain a secure and clean working environment before, during and after the installation.

D. Maintain a stable room temperature of at least 65°F for a minimum of one (1) week prior to, during and thereafter installation.

E. An effective low-permeance vapor barrier is placed directly beneath the concrete subfloor. For "on" or "below grade" installations, it is recommended to provide a permanent vapor barrier resistant to long term hydrostatic pressure/moisture exposure. Protrusions should be sealed to prevent moisture migration into the slab. Moisture should not be allowed to enter the slab after the completed construction.

F. Concrete subfloor surface pH level within the 7 to 11 range dependent upon installation type.

G. Concrete subfloor should be no greater than 1/8" within a 10 ft diameter. This tolerance can be measured in accordance with ASTM E1155. A specified (F_F) of 50 and an (F_L) of 30 should reach this degree of floor flatness and floor level. There is no numerical correlation between F numbers and the deviation from the straight

edge. However, the above specified numbers should achieve a flat floor with minimal deviation in the slab. Reference ACI 117 and ACI 302.1R. The general contractor should provide a certificate of compliance with the above recommendations.

H. Concrete subfloor must be clean and free of all foreign materials or objects including, but not limited to, curing compounds and sealers.

I. Fill cracks, grooves, voids, depressions, and other minor imperfections. Follow the manufacturer's directions. Moveable joints must be treated utilizing specific transitioning joint devices depending upon the architect's recommendations. Follow current ASTM F710 guidelines for the preparation of concrete slabs to receive resilient flooring.

J. Refer to ACI 302.2R "Guidelines for Concrete Slabs that Receive Moisture-Sensitive Flooring Materials" for concrete design and construction.

K. Concrete slab shall be fortified with continual steel reinforcement. Fiber reinforcement alone shall not be considered adequate fortification.

1.6 *WARRANTY*

A. Special Limited Warranty:
   1. Manufacturer's standard form in which manufacturer agrees to repair or replace sports flooring including labor that fails within specified warranty period.

B. Material warranty must be direct from the product manufacturer.
   1. Material warranties from separate or third party insurance providers are not valid.
   2. Material warranties must come from original manufacturer or division thereof. Private label warranties from distributors or brokers are not valid. Supply original point of manufacturing upon request.

C. Failures include, but are not limited to, the following:
   1. Material manufacturing defects.
   2. Surface wear and deterioration to the point of wear-through of wear layer per ASTM F410/ASTM F1303.
   3. Failure due to substrate moisture exposure exceeding 80 percent relative humidity when tested according to ASTM F2170.

D. Warranty Period:
   1. <u>For material defects and surface wear-through:</u> **15** years from date of substantial completion.

E. Installer's Limited Warranty:
   1. Installer's standard form in which installer agrees to repair or replace sports flooring that fails due to poor workmanship or faulty installation within the specified warranty period.
   2. Warranty Period: 2 years from date of substantial completion.

1.7 *ADDITIONAL MATERIALS*

A. Furnish to the owner additional materials containing a total of at least 1% of each different color or design of the indoor resilient athletic surfacing used on the project.

1.8 *LEED™ CERTIFICATION*

A. The indoor resilient athletic surfacing should be able to help this facility to achieve points towards *LEED™ certification.* Flooring system must be certified by FloorScore.
B. LEED categories positively affected by the indoor resilient athletic surfacing:

LEED™ V4 Credit		Contribution
Materials & Resources: Building Product Disclosure & Optimization (BPDO)		
MRc3: Sourcing of Raw Materials	Options 1 & 2	2 Points
MRc4: Material Ingredients	Option 1	1 Point
MRc5: Construction and Demolition Management	Reclamation and Recycling	ReStart® Program
Indoor Environmental Quality		
EQc2: Low-Emitting Materials	TVOC: 0.5 mg/m3 or less	FloorScore®

PART 2 - PRODUCTS

2.1 *MANUFACTURERS*

A. The basis of the design for the indoor resilient multipurpose surfacing is Omnisports 9.4 mm and Lumaflex Elite system as manufactured by Tarkett.
B. All other installation accessories and related components must be either made or approved by the indoor resilient athletic surfacing manufacturer.
C. Other products may be approved as equal if deemed qualified and submitted in accordance with the General Conditions.
D. Test reports confirming compliance from an independent sports laboratory must be provided along with samples, technical data, installation, maintenance, and warranty prior to acceptance as an alternative product.

2.2 *MATERIALS*

A. Omnisports 9.4 mm - Prefabricated sport surface 2.0 mm (0.08″) with wood flooring design and slightly textured embossed surface as supplied by Tarkett.
   1. Embossing of wood design and solid colors must be the same; varying embossing or surface textures will not be allowed.
   2. Printing of wood design shall closely resemble standard wood strip flooring in size, color, board length, and grain appearance.
   3. The wood design shall be protected by a clear layer of pure PVC (Polyvinyl Chloride) and TopClean xp, a factory-applied UV cured urethane treatment.
   4. Intermediate layers shall be fortified with a non-woven fiberglass grid for increased dimensional stability.
   5. The Lumaflex Elite System shall incorporate Lumaflex Elite double tongue and grooved multi-ply engineered panels, force reduction cushion, and appropriate vapor retarder.

B. Physical properties of the indoor resilient athletic surfacing shall conform to the following minimums:

Width	—	6′ 6″ (2 m)
Length	—	85′ (25.9m) approx.
Wear Layer	—	2 mm
Total Thickness	—	9.4 mm
Total Combined Thickness		1 5/8″ (40 mm approx.)
Wear Layer	Type 1– Grade 1	ASTM F1303/F410
Rolling Load	PASSED	0.30 (EN 1569 {11/1999})
Force Reduction	PASSED	ASTM F2772 Class 5
Surface Finish Effect	PASSED	ASTM F2772 (80 – 110)
Vertical Deformation	PASSED	ASTM F2772
Ball Rebound	PASSED	ASTM F2772 > 90%
Chemical Resistance	Excellent	ASTM F925
Impact Resistance	PASSED	EN 1717
Abrasion Resistance	PASSED	0.10 (EN ISO 5470-1 {06/1999})
Static Load Limit	PASSED	ASTM F970- Load 175 Lbs
Phthalate-free technology	—	YES
REACH Compliant	—	YES
Heavy Metals	—	NO
ISO 9001	—	YES
ISO 14001	—	YES

1. Color: As available from the indoor resilient athletic surfacing manufacturer's standard range.
2. Hardwood Design Series: A wood look design as available from the indoor resilient athletic surfacing manufacturer's standard range.
3. Texture: Texture to remain consistent between solid colors and wood design when blending colors.

C. Welding Rod: As supplied by the indoor resilient athletic surfacing manufacturer or supplier.
   1. Color to blend with the indoor resilient athletic surfacing color or design.
   2. All seams shall be welded to create a monolithic and impermeable surface.

D. Adhesive: As approved by the indoor resilient athletic surfacing manufacturer.

E. Game Line Paint and Primer: As approved by the indoor resilient athletic surfacing manufacturer.

PART 3 - EXECUTION

3.1 *EXAMINATION*

A. It is the responsibility of the general contractor/construction manager to ensure that project/site conditions are acceptable for the installation of the indoor resilient athletic flooring.
B. Verify that the area in which the indoor resilient athletic surfacing will be installed is dry and weather tight. Verify that permanent heat, light and ventilation are installed and operable.
C. Verify that all other work that could cause damage, dirt and dust or interrupt the normal pace of the indoor resilient athletic flooring installation is completed or suspended.
D. Verify that there is a stable room temperature of at least 65◦F.
E. Verify that there are no foreign materials or objects on the subfloor and that the subfloor is clean and ready for installation.
F. *Concrete Subfloor: moisture content less than 85% RH when tested per ASTM F2170.*
G. Follow Fieldturf USA, Inc. installation recommendations.
H. Do not average the results of the tests. Report all field test results in writing to the General Contractor, Architect, and End User prior to installation.
I. Verify that the concrete subfloor surface pH level is within the 7 - 11 range.
J. Document the results confirming the slab is within manufacturer's tolerances for slab deviation.

3.2 *PREPARATION OF SURFACES*

A. Sand the entire surface of the concrete slab.
B. Sweep the concrete slab so as to remove all dirt and dust. If a sweeping compound is to be used it must be a sweeping compound that does not contain oil or other items that may inhibit the adhesive bond.
C. Slab must be dust free. In the event that dust impairs adhesive bond, priming the slab prior to application of adhesive may be necessary. Follow installation guidelines.
D. Follow OSHA guidelines.

3.3 *INSTALLATION*

A. The installation area shall be closed to all traffic and activity for a period to be set by the indoor resilient athletic surfacing installer. The indoor resilient athletic surfacing installation shall not begin until the installer is familiar with the existing conditions.
B. All necessary precautions should be taken to minimize noise, smell, dust, the use of hazardous materials and any other items that may inconvenience others.
C. Install the indoor resilient athletic surfacing in strict accordance with the indoor resilient athletic surfacing manufacturer's written instructions.
D. Install the indoor resilient athletic surfacing minimizing cross seams. Provide a seam diagram during the submittal process for approval prior to installation. Vinyl Sheet Flooring Seams: Comply with ASTM F 1516. Rout joints and heat weld to permanently and seamlessly fuse sections together.
E. Paint game lines using approved game line paint primer and game line paint in strict accordance with the game line paint manufacturer's instructions.
F. Install appropriate threshold plates or transition strips where necessary.

2.0 *CLEANING*

A. Remove all unused materials, tools, and equipment and dispose of any debris properly. Clean the indoor resilient athletic surfacing in accordance with the manufacturer's instructions.

3.6 *PROTECTION*

A. If required, protect the indoor resilient athletic surfacing from damage using coverings approved by the manufacturer until acceptance of work by the customer or their authorized representative.

3.7 *RELATED STANDARDS AND GUIDELINES*

A. ASTM F2170 "Standard Test Method for Determining Relative Humidity In Concrete Floor Slabs Using In-Situ Probes"
B. ASTM F710 "Standard Practice for Preparing Concrete Floors to Receive Resilient Flooring"
C. ACI 302.2R-06 "Guideline for Concrete Slabs that Receive Moisture-Sensitive Flooring Materials"
D. ASTM F2772-11 "Standard Specification for Athletic Performance Properties of Indoor Sports Floor Systems"

END OF SECTION

SECTION 09 65 66
ARCHITECTURAL SPECIFICATIONS FOR INDOOR RESILIENT ATHLETIC SURFACING

PART 1 – GENERAL

1.1 *SECTION INCLUDES*

A. Supply and installation of the indoor resilient multipurpose surfacing
B. Application of the game lines
C. References for the correct construction and preparation of concrete slabs to receive resilient flooring.

1.2 *SUBMITTALS*

A. Product Data:
   1. Manufacturer's promotional brochures, specifications and installation instructions
B. Manufacturer Certifications:
   1. Provide certification that accurately identifies the Original Equipment Manufacturer (OEM) of flooring furnished for this project including manufacturer's name, address and factory location.
   2. Suppliers of private label flooring for this project must identify themselves as such and fully disclose the OEM information listed above.
   3. All "manufacturer" requirements in these specifications must be complied with by the OEM, including warranties, certifications, qualifications, product data, test results, environmental requirements, performance data, etc.
C. Samples:
   1. Submit for selection and approval three (3) sets of the indoor resilient multipurpose surfacing, manufacturer's brochures, samples or sample boards of all of the available colors, textures and styles.
   2. Submit color samples of all the available game line paint colors for selection and approval.
D. Closeout Submittals:
   1. Submit three (3) copies of the indoor resilient multipurpose surfacing and manufacturer's maintenance instructions.
   2. Submit three (3) copies of the material and installation warranties as specified.

1.3 *QUALITY ASSURANCE*

A. Qualifications:
   1. The indoor resilient multipurpose surfacing shall have been actively marketed for a minimum of ten (10) years.
   2. The indoor resilient multipurpose surfacing shall be manufactured in an ISO 9001 certified plant.
   3. The indoor resilient multipurpose surfacing shall be manufactured in an ISO 14001 certified plant.
   4. The indoor resilient multipurpose surfacing supplier shall be an established firm, experienced in the field, and competent in the techniques required by the manufacturer.
   5. The installer of the indoor resilient multipurpose surfacing shall have a minimum of five (5) years of experience in the field installing indoor resilient multipurpose surfacing and have worked on at least five (5) projects of similar size, type and complexity.

B. Certifications:
   1. Installer to submit the indoor resilient athletic surfacing manufacturer's certification attesting that they are a trained installer of the indoor resilient multipurpose surfacing.
   2. The indoor resilient multipurpose surfacing manufacturer to submit official ISO 9001 certification for the facility in which the indoor resilient multipurpose surfacing is manufactured.

C. Testing:
   1. Tests shall be relative for multi-purpose use with certificates from independent testing resources to be made available upon request.
   2. Test results shall be no more than 5 years old and performed according to ASTM standard testing procedures.

1.4 *DELIVERY, STORAGE AND HANDLING*

A. Delivery:
   Material shall not be delivered until all related work is in place and finished and/or proper storage facilities and conditions can be provided and guaranteed stable according to FieldTurf USA, Inc. recommendations.

B. Storage:
   1. Store the material in a secure, clean and dry location.
   2. Maintain temperature between 55° and 85° Fahrenheit.
   3. Store the indoor resilient athletic surfacing rolls in an upright position on a smooth flat surface immediately upon delivery to jobsite.
   4. Rolls shipped in rigid protective cardboard containers can be laid horizontally prior to unpacking and installation.

1.5 *PROJECT/SITE CONDITIONS*

A. It is the responsibility of the general contractor/construction manager to maintain project/site conditions acceptable for the installation of the indoor resilient multipurpose flooring.

B. The area in which the indoor resilient multipurpose surfacing will be installed shall be dry and weather tight. Permanent heat, light and ventilation shall be installed and operable.

C. All other trades shall have completed their work prior to the installation of the resilient athletic flooring. The general contractor or construction manager shall maintain a secure and clean working environment before, during and after the installation.

D. Maintain a stable room temperature of at least 65°F for a minimum of one (1) week prior to, during and thereafter installation.

E. An effective low-permeance vapor barrier is placed directly beneath the concrete subfloor. For "on" or "below grade" installations, it is recommended to provide a permanent vapor barrier resistant to long term hydrostatic pressure/moisture exposure. Protrusions should be sealed to prevent moisture migration into the slab. Moisture should not be allowed to enter the slab after the completed construction.

F. Concrete subfloor surface pH level within the 7 to 11 range dependent upon installation type.

G. Concrete subfloor should be no greater than 1/8" within a 10 ft diameter. This tolerance can be measured in accordance with ASTM E1155. A specified (F_F) of 50 and an (F_L) of 30 should reach this degree of floor flatness and floor level. There is no numerical correlation between F numbers and the deviation from the straight

edge. However, the above specified numbers should achieve a flat floor with minimal deviation in the slab. Reference ACI 117 and ACI 302.1R. The general contractor should provide a certificate of compliance with the above recommendations.

H. Concrete subfloor must be clean and free of all foreign materials or objects including, but not limited to, curing compounds and sealers.

I. Fill cracks, grooves, voids, depressions, and other minor imperfections. Follow the manufacturer's directions. Moveable joints must be treated utilizing specific transitioning joint devices depending upon the architect's recommendations. Follow current ASTM F710 guidelines for the preparation of concrete slabs to receive resilient flooring.

J. Refer to ACI 302.2R "Guidelines for Concrete Slabs that Receive Moisture-Sensitive Flooring Materials" for concrete design and construction.

K. Concrete slab shall be fortified with continual steel reinforcement. Fiber reinforcement alone shall not be considered adequate fortification.

1.6 *WARRANTY*

A. Special Limited Warranty:
   1. Manufacturer's standard form in which manufacturer agrees to repair or replace sports flooring including labor that fails within specified warranty period.

B. Material warranty must be direct from the product manufacturer.
   1. Material warranties from separate or third party insurance providers are not valid.
   2. Material warranties must come from original manufacturer or division thereof. Private label warranties from distributors or brokers are not valid. Supply original point of manufacturing upon request.

C. Failures include, but are not limited to, the following:
   1. Material manufacturing defects.
   2. Surface wear and deterioration to the point of wear-through of wear layer per ASTM F410/ASTM F1303.
   3. Failure due to substrate moisture exposure exceeding 80 percent relative humidity when tested according to ASTM F2170.

D. Warranty Period:
   1. <u>For material defects and surface wear-through:</u> **15** years from date of substantial completion.

E. Installer's Limited Warranty:
   1. Installer's standard form in which installer agrees to repair or replace sports flooring that fails due to poor workmanship or faulty installation within the specified warranty period.
   2. Warranty Period: 2 years from date of substantial completion.

1.7 *ADDITIONAL MATERIALS*

A. Furnish to the owner additional materials containing a total of at least 1% of each different color or design of the indoor resilient athletic surfacing used on the project.

1.8 *LEED™ CERTIFICATION*

A. The indoor resilient athletic surfacing should be able to help this facility to achieve points towards *LEED™ certification.* Flooring system must be certified by FloorScore.
B. LEED categories positively affected by the indoor resilient athletic surfacing:

LEED™ V4 Credit		Contribution
Materials & Resources: Building Product Disclosure & Optimization (BPDO)		
MRc3: Sourcing of Raw Materials	Options 1 & 2	2 Points
MRc4: Material Ingredients	Option 1	1 Point
MRc5: Construction and Demolition Management	Reclamation and Recycling	ReStart® Program
Indoor Environmental Quality		
EQc2: Low-Emitting Materials	TVOC: 0.5 mg/m3 or less	FloorScore®

PART 2 - PRODUCTS

2.1 *MANUFACTURERS*

A. The basis of the design for the indoor resilient multipurpose surfacing is Omnisports 9.4 mm and Lumaflex Fit system as manufactured by Tarkett.
B. All other installation accessories and related components must be either made or approved by the indoor resilient athletic surfacing manufacturer.
C. Other products may be approved as equal if deemed qualified and submitted in accordance with the General Conditions.
D. Test reports confirming compliance from an independent sports laboratory must be provided along with samples, technical data, installation, maintenance, and warranty prior to acceptance as an alternative product.

2.2 *MATERIALS*

A. Omnisports 9.4 mm - Prefabricated sport surface 2.0 mm (0.08″) with wood flooring design and slightly textured embossed surface as supplied by Tarkett.
   1. Embossing of wood design and solid colors must be the same; varying embossing or surface textures will not be allowed.
   2. Printing of wood design shall closely resemble standard wood strip flooring in size, color, board length, and grain appearance.
   3. The wood design shall be protected by a clear layer of pure PVC (Polyvinyl Chloride) and TopClean xp, a factory-applied UV cured urethane treatment.
   4. Intermediate layers shall be fortified with a non-woven fiberglass grid for increased dimensional stability.
   5. The Lumaflex Fit System shall incorporate Lumaflex Fit double tongue and grooved multi-ply engineered panels, force reduction cushion, and appropriate vapor retarder.

B. Physical properties of the indoor resilient athletic surfacing shall conform to the following minimums:

Width	—	6′ 6″ (2 m)
Length	—	85′ (25.9m) approx.
Wear Layer	—	2 mm
Total Thickness	—	9.4 mm
Total Combined Thickness		53mm (2 1/8″) approx
Wear Layer	Type 1– Grade 1	ASTM F1303/F410
Rolling Load	PASSED	0.30 (EN 1569 {11/1999})
Force Reduction	PASSED	ASTM F2772 Class 5
Surface Finish Effect	PASSED	ASTM F2772 (80 – 110)
Vertical Deformation	PASSED	ASTM F2772
Ball Rebound	PASSED	ASTM F2772 > 90%
Chemical Resistance	Excellent	ASTM F925
Impact Resistance	PASSED	EN 1717
Abrasion Resistance	PASSED	0.10 (EN ISO 5470-1 {06/1999})
Static Load Limit	PASSED	ASTM F970- Load 175 Lbs
Phthalate-free technology	—	YES
REACH Compliant	—	YES
Heavy Metals	—	NO
ISO 9001	—	YES
ISO 14001	—	YES

1. Color: As available from the indoor resilient athletic surfacing manufacturer's standard range.
2. Hardwood Design Series: A wood look design as available from the indoor resilient athletic surfacing manufacturer's standard range.
3. Texture: Texture to remain consistent between solid colors and wood design when blending colors.

C. Welding Rod: As supplied by the indoor resilient athletic surfacing manufacturer or supplier.
   1. Color to blend with the indoor resilient athletic surfacing color or design.
   2. All seams shall be welded to create a monolithic and impermeable surface.

D. Adhesive: As approved by the indoor resilient athletic surfacing manufacturer.

E. Game Line Paint and Primer: As approved by the indoor resilient athletic surfacing manufacturer.

PART 3 - EXECUTION

3.1 *EXAMINATION*

A. It is the responsibility of the general contractor/construction manager to ensure that project/site conditions are acceptable for the installation of the indoor resilient athletic flooring.
B. Verify that the area in which the indoor resilient athletic surfacing will be installed is dry and weather tight. Verify that permanent heat, light and ventilation are installed and operable.
C. Verify that all other work that could cause damage, dirt and dust or interrupt the normal pace of the indoor resilient athletic flooring installation is completed or suspended.
D. Verify that there is a stable room temperature of at least 65◦F.
E. Verify that there are no foreign materials or objects on the subfloor and that the subfloor is clean and ready for installation.
F. *Concrete Subfloor: moisture content less than 85% RH when tested per ASTM F2170.*
G. Follow Fieldturf USA, Inc. installation recommendations.
H. Do not average the results of the tests. Report all field test results in writing to the General Contractor, Architect, and End User prior to installation.
I. Verify that the concrete subfloor surface pH level is within the 7 - 11 range.
J. Document the results confirming the slab is within manufacturer's tolerances for slab deviation.

3.2 *PREPARATION OF SURFACES*

A. Sand the entire surface of the concrete slab.
B. Sweep the concrete slab so as to remove all dirt and dust. If a sweeping compound is to be used it must be a sweeping compound that does not contain oil or other items that may inhibit the adhesive bond.
C. Slab must be dust free. In the event that dust impairs adhesive bond, priming the slab prior to application of adhesive may be necessary. Follow installation guidelines.
D. Follow OSHA guidelines.

3.3 *INSTALLATION*

A. The installation area shall be closed to all traffic and activity for a period to be set by the indoor resilient athletic surfacing installer. The indoor resilient athletic surfacing installation shall not begin until the installer is familiar with the existing conditions.
B. All necessary precautions should be taken to minimize noise, smell, dust, the use of hazardous materials and any other items that may inconvenience others.
C. Install the indoor resilient athletic surfacing in strict accordance with the indoor resilient athletic surfacing manufacturer's written instructions.
D. Install the indoor resilient athletic surfacing minimizing cross seams. Provide a seam diagram during the submittal process for approval prior to installation. Vinyl Sheet Flooring Seams: Comply with ASTM F 1516. Rout joints and heat weld to permanently and seamlessly fuse sections together.
E. Paint game lines using approved game line paint primer and game line paint in strict accordance with the game line paint manufacturer's instructions.
F. Install appropriate threshold plates or transition strips where necessary.

2.0 *CLEANING*

A. Remove all unused materials, tools, and equipment and dispose of any debris properly. Clean the indoor resilient athletic surfacing in accordance with the manufacturer's instructions.

3.6 *PROTECTION*

A. If required, protect the indoor resilient athletic surfacing from damage using coverings approved by the manufacturer until acceptance of work by the customer or their authorized representative.

3.7 *RELATED STANDARDS AND GUIDELINES*

A. ASTM F2170 "Standard Test Method for Determining Relative Humidity In Concrete Floor Slabs Using In-Situ Probes"
B. ASTM F710 "Standard Practice for Preparing Concrete Floors to Receive Resilient Flooring"
C. ACI 302.2R-06 "Guideline for Concrete Slabs that Receive Moisture-Sensitive Flooring Materials"
D. ASTM F2772-11 "Standard Specification for Athletic Performance Properties of Indoor Sports Floor Systems"

END OF SECTION

SECTION 09 65 66
ARCHITECTURAL SPECIFICATIONS FOR INDOOR RESILIENT ATHLETIC SURFACING

PART 1 – GENERAL

1.1 *SECTION INCLUDES*

A. Supply and installation of the indoor resilient multipurpose surfacing
B. Application of the game lines
C. References for the correct construction and preparation of concrete slabs to receive resilient flooring.

1.2 *SUBMITTALS*

A. Product Data:
   1. Manufacturer's promotional brochures, specifications and installation instructions
B. Manufacturer Certifications:
   1. Provide certification that accurately identifies the Original Equipment Manufacturer (OEM) of flooring furnished for this project including manufacturer's name, address and factory location.
   2. Suppliers of private label flooring for this project must identify themselves as such and fully disclose the OEM information listed above.
   3. All "manufacturer" requirements in these specifications must be complied with by the OEM, including warranties, certifications, qualifications, product data, test results, environmental requirements, performance data, etc.
C. Samples:
   1. Submit for selection and approval three (3) sets of the indoor resilient multipurpose surfacing, manufacturer's brochures, samples or sample boards of all of the available colors, textures and styles.
   2. Submit color samples of all the available game line paint colors for selection and approval.
D. Closeout Submittals:
   1. Submit three (3) copies of the indoor resilient multipurpose surfacing and manufacturer's maintenance instructions.
   2. Submit three (3) copies of the material and installation warranties as specified.

1.3 *QUALITY ASSURANCE*

A. Qualifications:
   1. The indoor resilient multipurpose surfacing shall have been actively marketed for a minimum of ten (10) years.
   2. The indoor resilient multipurpose surfacing shall be manufactured in an ISO 9001 certified plant.
   3. The indoor resilient multipurpose surfacing shall be manufactured in an ISO 14001 certified plant.
   4. The indoor resilient multipurpose surfacing supplier shall be an established firm, experienced in the field, and competent in the techniques required by the manufacturer.
   5. The installer of the indoor resilient multipurpose surfacing shall have a minimum of five (5) years of experience in the field installing indoor resilient multipurpose surfacing and have worked on at least five (5) projects of similar size, type and complexity.

B. Certifications:
   1. Installer to submit the indoor resilient athletic surfacing manufacturer's certification attesting that they are a trained installer of the indoor resilient multipurpose surfacing.
   2. The indoor resilient multipurpose surfacing manufacturer to submit official ISO 9001 certification for the facility in which the indoor resilient multipurpose surfacing is manufactured.

C. Testing:
   1. Tests shall be relative for multi-purpose use with certificates from independent testing resources to be made available upon request.
   2. Test results shall be no more than 5 years old and performed according to ASTM standard testing procedures.

1.4 *DELIVERY, STORAGE AND HANDLING*

A. Delivery:
   Material shall not be delivered until all related work is in place and finished and/or proper storage facilities and conditions can be provided and guaranteed stable according to FieldTurf USA, Inc. recommendations.

B. Storage:
   1. Store the material in a secure, clean and dry location.
   2. Maintain temperature between 55° and 85° Fahrenheit.
   3. Store the indoor resilient athletic surfacing rolls in an upright position on a smooth flat surface immediately upon delivery to jobsite.
   4. Rolls shipped in rigid protective cardboard containers can be laid horizontally prior to unpacking and installation.

1.5 *PROJECT/SITE CONDITIONS*

A. It is the responsibility of the general contractor/construction manager to maintain project/site conditions acceptable for the installation of the indoor resilient multipurpose flooring.

B. The area in which the indoor resilient multipurpose surfacing will be installed shall be dry and weather tight. Permanent heat, light and ventilation shall be installed and operable.

C. All other trades shall have completed their work prior to the installation of the resilient athletic flooring. The general contractor or construction manager shall maintain a secure and clean working environment before, during and after the installation.

D. Maintain a stable room temperature of at least 65°F for a minimum of one (1) week prior to, during and thereafter installation.

E. An effective low-permeance vapor barrier is placed directly beneath the concrete subfloor. For "on" or "below grade" installations, it is recommended to provide a permanent vapor barrier resistant to long term hydrostatic pressure/moisture exposure. Protrusions should be sealed to prevent moisture migration into the slab. Moisture should not be allowed to enter the slab after the completed construction.

F. Concrete subfloor surface pH level within the 7 to 11 range dependent upon installation type.

G. Concrete subfloor should be no greater than 1/8" within a 10 ft diameter. This tolerance can be measured in accordance with ASTM E1155. A specified (F_F) of 50 and an (F_L) of 30 should reach this degree of floor flatness and floor level. There is no numerical correlation between F numbers and the deviation from the straight

edge. However, the above specified numbers should achieve a flat floor with minimal deviation in the slab. Reference ACI 117 and ACI 302.1R. The general contractor should provide a certificate of compliance with the above recommendations.

H. Concrete subfloor must be clean and free of all foreign materials or objects including, but not limited to, curing compounds and sealers.

I. Fill cracks, grooves, voids, depressions, and other minor imperfections. Follow the manufacturer's directions. Moveable joints must be treated utilizing specific transitioning joint devices depending upon the architect's recommendations. Follow current ASTM F710 guidelines for the preparation of concrete slabs to receive resilient flooring.

J. Refer to ACI 302.2R "Guidelines for Concrete Slabs that Receive Moisture-Sensitive Flooring Materials" for concrete design and construction.

K. Concrete slab shall be fortified with continual steel reinforcement. Fiber reinforcement alone shall not be considered adequate fortification.

1.6 *WARRANTY*

A. Special Limited Warranty:
   1. Manufacturer's standard form in which manufacturer agrees to repair or replace sports flooring including labor that fails within specified warranty period.

B. Material warranty must be direct from the product manufacturer.
   1. Material warranties from separate or third party insurance providers are not valid.
   2. Material warranties must come from original manufacturer or division thereof. Private label warranties from distributors or brokers are not valid. Supply original point of manufacturing upon request.

C. Failures include, but are not limited to, the following:
   1. Material manufacturing defects.
   2. Surface wear and deterioration to the point of wear-through of wear layer per ASTM F410/ASTM F1303.
   3. Failure due to substrate moisture exposure exceeding 80 percent relative humidity when tested according to ASTM F2170.

D. Warranty Period:
   1. <u>For material defects and surface wear-through:</u> **15** years from date of substantial completion.

E. Installer's Limited Warranty:
   1. Installer's standard form in which installer agrees to repair or replace sports flooring that fails due to poor workmanship or faulty installation within the specified warranty period.
   2. Warranty Period: 2 years from date of substantial completion.

1.7 *ADDITIONAL MATERIALS*

A. Furnish to the owner additional materials containing a total of at least 1% of each different color or design of the indoor resilient athletic surfacing used on the project.

1.8 *LEED™ CERTIFICATION*

A. The indoor resilient athletic surfacing should be able to help this facility to achieve points towards *LEED™ certification.* Flooring system must be certified by FloorScore.
B. LEED categories positively affected by the indoor resilient athletic surfacing:

LEED™ V4 Credit		Contribution
Materials & Resources: Building Product Disclosure & Optimization (BPDO)		
MRc3: Sourcing of Raw Materials	Options 1 & 2	2 Points
MRc4: Material Ingredients	Option 1	1 Point
MRc5: Construction and Demolition Management	Reclamation and Recycling	ReStart® Program
Indoor Environmental Quality		
EQc2: Low-Emitting Materials	TVOC: 0.5 mg/m3 or less	FloorScore®

PART 2 - PRODUCTS

2.1 *MANUFACTURERS*

A. The basis of the design for the indoor resilient multipurpose surfacing is Omnisports 9.4 mm and Lumaflex system as manufactured by Tarkett.
B. All other installation accessories and related components must be either made or approved by the indoor resilient athletic surfacing manufacturer.
C. Other products may be approved as equal if deemed qualified and submitted in accordance with the General Conditions.
D. Test reports confirming compliance from an independent sports laboratory must be provided along with samples, technical data, installation, maintenance, and warranty prior to acceptance as an alternative product.

2.2 *MATERIALS*

A. Omnisports 9.4 mm - Prefabricated sport surface 2.0 mm (0.08″) with wood flooring design and slightly textured embossed surface as supplied by Tarkett.
   1. Embossing of wood design and solid colors must be the same; varying embossing or surface textures will not be allowed.
   2. Printing of wood design shall closely resemble standard wood strip flooring in size, color, board length, and grain appearance.
   3. The wood design shall be protected by a clear layer of pure PVC (Polyvinyl Chloride) and TopClean xp, a factory-applied UV cured urethane treatment.
   4. Intermediate layers shall be fortified with a non-woven fiberglass grid for increased dimensional stability.
   5. The Lumaflex System shall incorporate Lumaflex double tongue and grooved multi-ply engineered panels, force reduction cushion, and appropriate vapor retarder.

B. Physical properties of the indoor resilient athletic surfacing shall conform to the following minimums:

Width	—	6′ 6″ (2 m)
Length	—	85′ (25.9m) approx.
Wear Layer	—	2 mm
Total Thickness	—	9.4 mm
Total Combined Thickness		1 5/8″ (40 mm approx.)
Wear Layer	Type 1– Grade 1	ASTM F1303/F410
Rolling Load	PASSED	0.30 (EN 1569 {11/1999})
Force Reduction	PASSED	ASTM F2772 Class 4
Surface Finish Effect	PASSED	ASTM F2772 (80 – 110)
Vertical Deformation	PASSED	ASTM F2772
Ball Rebound	PASSED	ASTM F2772 > 90%
Chemical Resistance	Excellent	ASTM F925
Impact Resistance	PASSED	EN 1717
Abrasion Resistance	PASSED	0.10 (EN ISO 5470-1 {06/1999})
Static Load Limit	PASSED	ASTM F970- Load 175 Lbs
Fire Rating	PASSED	ASTM E648 Class 1
Phthalate-free technology	—	YES
Lumaflex Foam		GreenGuard Certified
REACH Compliant	—	YES
Heavy Metals	—	NO
ISO 9001	—	YES
ISO 14001	—	YES

1. Color: As available from the indoor resilient athletic surfacing manufacturer's standard range.
2. Hardwood Design Series: A wood look design as available from the indoor resilient athletic surfacing manufacturer's standard range.
3. Texture: Texture to remain consistent between solid colors and wood design when blending colors.

C. Welding Rod: As supplied by the indoor resilient athletic surfacing manufacturer or supplier.
   1. Color to blend with the indoor resilient athletic surfacing color or design.
   2. All seams shall be welded to create a monolithic and impermeable surface.

D. Adhesive: As approved by the indoor resilient athletic surfacing manufacturer.

E. Game Line Paint and Primer: As approved by the indoor resilient athletic surfacing manufacturer.

PART 3 - EXECUTION

3.1 *EXAMINATION*

A. It is the responsibility of the general contractor/construction manager to ensure that project/site conditions are acceptable for the installation of the indoor resilient athletic flooring.
B. Verify that the area in which the indoor resilient athletic surfacing will be installed is dry and weather tight. Verify that permanent heat, light and ventilation are installed and operable.
C. Verify that all other work that could cause damage, dirt and dust or interrupt the normal pace of the indoor resilient athletic flooring installation is completed or suspended.
D. Verify that there is a stable room temperature of at least 65◦F.
E. Verify that there are no foreign materials or objects on the subfloor and that the subfloor is clean and ready for installation.
F. *Concrete Subfloor: moisture content less than 85% RH when tested per ASTM F2170.*
G. Follow Fieldturf USA, Inc. installation recommendations.
H. Do not average the results of the tests. Report all field test results in writing to the General Contractor, Architect, and End User prior to installation.
I. Verify that the concrete subfloor surface pH level is within the 7 - 11 range.
J. Document the results confirming the slab is within manufacturer's tolerances for slab deviation.

3.2 *PREPARATION OF SURFACES*

A. Sand the entire surface of the concrete slab.
B. Sweep the concrete slab so as to remove all dirt and dust. If a sweeping compound is to be used it must be a sweeping compound that does not contain oil or other items that may inhibit the adhesive bond.
C. Slab must be dust free. In the event that dust impairs adhesive bond, priming the slab prior to application of adhesive may be necessary. Follow installation guidelines.
D. Follow OSHA guidelines.

3.3 *INSTALLATION*

A. The installation area shall be closed to all traffic and activity for a period to be set by the indoor resilient athletic surfacing installer. The indoor resilient athletic surfacing installation shall not begin until the installer is familiar with the existing conditions.
B. All necessary precautions should be taken to minimize noise, smell, dust, the use of hazardous materials and any other items that may inconvenience others.
C. Install the indoor resilient athletic surfacing in strict accordance with the indoor resilient athletic surfacing manufacturer's written instructions.
D. Install the indoor resilient athletic surfacing minimizing cross seams. Provide a seam diagram during the submittal process for approval prior to installation. Vinyl Sheet Flooring Seams: Comply with ASTM F 1516. Rout joints and heat weld to permanently and seamlessly fuse sections together.
E. Paint game lines using approved game line paint primer and game line paint in strict accordance with the game line paint manufacturer's instructions.
F. Install appropriate threshold plates or transition strips where necessary.

2.0 *CLEANING*

A. Remove all unused materials, tools, and equipment and dispose of any debris properly. Clean the indoor resilient athletic surfacing in accordance with the manufacturer's instructions.

3.6 *PROTECTION*

A. If required, protect the indoor resilient athletic surfacing from damage using coverings approved by the manufacturer until acceptance of work by the customer or their authorized representative.

3.7 *RELATED STANDARDS AND GUIDELINES*

A. ASTM F2170 "Standard Test Method for Determining Relative Humidity In Concrete Floor Slabs Using In-Situ Probes"
B. ASTM F710 "Standard Practice for Preparing Concrete Floors to Receive Resilient Flooring"
C. ACI 302.2R-06 "Guideline for Concrete Slabs that Receive Moisture-Sensitive Flooring Materials"
D. ASTM F2772-11 "Standard Specification for Athletic Performance Properties of Indoor Sports Floor Systems"

END OF SECTION

SECTION 09 65 66
ARCHITECTURAL SPECIFICATIONS FOR INDOOR RESILIENT ATHLETIC SURFACING

PART 1 – GENERAL

1.1 *SECTION INCLUDES*

A. Supply and installation of the indoor resilient multipurpose surfacing
B. Application of the game lines
C. References for the correct construction and preparation of concrete slabs to receive resilient flooring.

1.2 *SUBMITTALS*

A. Product Data:
   1. Manufacturer's promotional brochures, specifications and installation instructions
B. Manufacturer Certifications:
   1. Provide certification that accurately identifies the Original Equipment Manufacturer (OEM) of flooring furnished for this project including manufacturer's name, address and factory location.
   2. Suppliers of private label flooring for this project must identify themselves as such and fully disclose the OEM information listed above.
   3. All "manufacturer" requirements in these specifications must be complied with by the OEM, including warranties, certifications, qualifications, product data, test results, environmental requirements, performance data, etc.
C. Samples:
   1. Submit for selection and approval three (3) sets of the indoor resilient multipurpose surfacing, manufacturer's brochures, samples or sample boards of all of the available colors, textures and styles.
   2. Submit color samples of all the available game line paint colors for selection and approval.
D. Closeout Submittals:
   1. Submit three (3) copies of the indoor resilient multipurpose surfacing and manufacturer's maintenance instructions.
   2. Submit three (3) copies of the material and installation warranties as specified.

1.3 *QUALITY ASSURANCE*

A. Qualifications:
   1. The indoor resilient multipurpose surfacing shall have been actively marketed for a minimum of ten (10) years.
   2. The indoor resilient multipurpose surfacing shall be manufactured in an ISO 9001 certified plant.
   3. The indoor resilient multipurpose surfacing shall be manufactured in an ISO 14001 certified plant.
   4. The indoor resilient multipurpose surfacing supplier shall be an established firm, experienced in the field, and competent in the techniques required by the manufacturer.
   5. The installer of the indoor resilient multipurpose surfacing shall have a minimum of five (5) years of experience in the field installing indoor resilient multipurpose surfacing and have worked on at least five (5) projects of similar size, type and complexity.

B. Certifications:
   1. Installer to submit the indoor resilient athletic surfacing manufacturer's or distributor's certification attesting that they are an approved installer of the indoor resilient multipurpose surfacing.
   2. The ind**o**or resilient multipurpose surfacing manufacturer to submit official ISO 9001 certification for the facility in which the indoor resilient multipurpose surfacing is manufactured.

C. Testing:
   Tests shall be relative for multi-purpose use with certificates from independent testing resources to be made available upon request. Test results shall be performed according to ASTM standard testing procedures including ASTM F2772 "Standard Specification for Athletic Performance Properties of Indoor Sports Floor Systems".

1.4 *DELIVERY, STORAGE AND HANDLING*

A. Delivery:
   Material shall not be delivered until all related work is in place and finished and/or proper storage facilities and conditions can be provided and guaranteed stable according to FieldTurf USA, Inc. recommendations.

B. Storage:
   1. Store the material in a secure, clean and dry location.
   2. Maintain temperature between 55° and 85° Fahrenheit.
   3. Store the indoor resilient athletic surfacing rolls in an upright position on a smooth flat surface immediately upon delivery to jobsite.
   4. Rolls shipped in rigid protective cardboard containers can be laid horizontally prior to unpacking and installation.

1.5 *PROJECT/SITE CONDITIONS*

A. It is the responsibility of the general contractor/construction manager to maintain project/site conditions acceptable for the installation of the indoor resilient multipurpose flooring.

B. The area in which the indoor resilient multipurpose surfacing will be installed shall be dry and weather tight. Permanent heat, light and ventilation shall be installed and operable.

C. All other trades shall have completed their work prior to the installation of the resilient athletic flooring. The general contractor or construction manager shall maintain a secure and clean working environment before, during and after the installation.

D. Maintain a stable room temperature of at least 65°F for a minimum of one (1) week prior to, during and thereafter installation.

E. An effective low-permeance vapor barrier is placed directly beneath the concrete subfloor. For "on" or "below grade" installations, it is recommended to provide a permanent vapor barrier resistant to long term hydrostatic pressure/moisture exposure. Protrusions should be sealed to prevent moisture migration into the slab. Moisture should not be allowed to enter the slab after the completed construction.

F. Concrete subfloor surface pH level within the 7 to 10 range dependent upon installation type.

G. Concrete subfloor should be no greater than 1/8" within a 10 ft diameter. This tolerance can be measured in accordance with ASTM E1155. A specified (F_F) of 50 and an (F_L) of 30 should reach this degree of floor flatness and floor level. There is no numerical correlation between F numbers and the deviation from the straight

edge. However, the above specified numbers should achieve a flat floor with minimal deviation in the slab. Reference ACI 117 and ACI 302.1R. The general contractor should provide a certificate of compliance with the above recommendations.

H. Concrete subfloor must be clean and free of all foreign materials or objects including, but not limited to, curing compounds and sealers.

I. Fill cracks, grooves, voids, depressions, and other minor imperfections. Follow the manufacturer's directions. Moveable joints must be treated utilizing specific transitioning joint devices depending upon the architect's recommendations. Follow current ASTM F710 guidelines for the preparation of concrete slabs to receive resilient flooring.

J. Refer to ACI 302.2R "Guidelines for Concrete Slabs that Receive Moisture-Sensitive Flooring Materials" for concrete design and construction.

K. Concrete slab shall be fortified with continual steel reinforcement. Fiber reinforcement alone shall not be considered adequate fortification.

1.6 *WARRANTY*

A. Special Limited Warranty:
   1. Manufacturer's standard form in which manufacturer agrees to repair or replace sports flooring including labor that fails within specified warranty period.

B. Material warranty must be direct from the product manufacturer.
   1. Material warranties must come from original manufacturer or division thereof. Private label warranties from distributors or brokers are not valid. Supply original point of manufacturing upon request.

C. Failures include, but are not limited to, the following:
   1. Material manufacturing defects.
   2. Surface wear and deterioration to the point of wear-through of wear layer per ASTM F410/ASTM F1303.
   3. Failure due to substrate moisture exposure exceeding 98 percent relative humidity when tested according to ASTM F2170.

D. Warranty Period:
   1. <u>For material defects and surface wear-through:</u> **25** years from date of substantial completion.
   2. <u>For moisture vapor tolerance:</u> **25** years from date of substantial completion.

E. Installer's Limited Warranty:
   1. Installer's standard form in which installer agrees to repair or replace sports flooring that fails due to poor workmanship or faulty installation within the specified warranty period.
   2. Warranty Period: 2 years from date of substantial completion.

1.7 *ADDITIONAL MATERIALS*

A. Furnish to the owner additional materials containing a total of at least 1% of each different color or design of the indoor resilient athletic surfacing used on the project.

1.8 *LEED™ CERTIFICATION*

A. The indoor resilient athletic surfacing should be able to help this facility to achieve points towards *LEED™ certification.* Flooring system must be certified by FloorScore.
B. LEED categories positively affected by the indoor resilient athletic surfacing:

LEED™ V4 Credit		Contribution
Materials & Resources: Building Product Disclosure & Optimization (BPDO)		
MRc3: Sourcing of Raw Materials	Options 1 & 2	2 Points
MRc4: Material Ingredients	Option 1	1 Point
MRc5: Construction and Demolition Management	Reclamation and Recycling	ReStart® Program
Indoor Environmental Quality		
EQc2: Low-Emitting Materials	TVOC: 0.5 mg/m3 or less	FloorScore®

PART 2 - PRODUCTS

2.1 *MANUFACTURERS*

A. The basis of the design for the indoor resilient multipurpose surfacing is Omnisports Active+ as manufactured by Tarkett.
B. All other installation accessories and related components must be either made or approved by the indoor resilient athletic surfacing manufacturer.
C. Other products may be approved as equal if deemed qualified and submitted in accordance with the General Conditions.
D. Test reports confirming compliance from an independent sports laboratory must be provided along with samples, technical data, installation, maintenance, and warranty prior to acceptance as an alternative product.

2.2 *MATERIALS*

A. Omnisports Active+ - Prefabricated sport surface 8.1 mm (0.14”) with wood flooring design, single surface embossing and Extreme Three (3) Layers technology (X3LT) as supplied by Tarkett.
   1. Embossing of wood design and solid colors must be the same; varying embossing or surface textures will not be allowed.
   2. Printing of wood design shall closely resemble standard wood strip flooring in size, color, board length, and grain appearance.
   3. Surface embossing combined with TopClean XP must offer proper balance of surface friction per the ASTM F2772.
   4. Surface embossing combined with TopClean XP must provide resistance to stains and scratches. Surface profile must not incorporate linear embossing.
   5. The wood design shall be protected by a clear layer of pure PVC (Polyvinyl Chloride) and TopClean XP, a factory-applied UV cured urethane treatment.
   6. Extreme Three (3) Layers technology (X3LT) includes Omnisports XCS cushion, glass veil and calendared sheet must offer improved shock absorbing comfort while providing better indentation recovery

7. The XCS cushion force reduction layer shall be high-density closed cell PVC foam with honeycomb embossing, and is applied in one continuous manufacturing process.
8. Laminated or adhered foam layers will not be allowed.
9. Field constructed products will not be accepted.

A. Physical properties of the indoor resilient athletic surfacing shall conform to the following minimums:

Width	—	6’ 6” (2 m)
Length	—	85’ (25.9m) approx.
Wear Layer	—	2 mm
Total Thickness	—	8.1 mm
Wear Layer	Type 1– Grade 1	ASTM F1303/F410
Vertical Deformation	PASSED	ASTM F2772
Rolling Load	PASSED	0.30 (EN 1569 {11/1999})
Surface Finish Effect	PASSED	ASTM F2772 (80 – 110)
Chemical Resistance	Excellent	ASTM F925
Impact Resistance	PASSED	EN 1717
Abrasion Resistance	PASSED	0.10 (EN ISO 5470-1 {06/1999})
Static Load Limit	PASSED	ASTM F970- Load 175 Lbs
Sound Insulation	Excellent	+/= 19 dB (ISO 717/2)
In-Room Sound Insulation	Excellent	61dB (NF S31-074)
Ball Rebound	PASSED	ASTM F2772 > 90%
Force Reduction	PASSED	ASTM F2772 Class 3
Fire Rating	PASSED	ASTM E648 Class 1
Microbial Assays Test	No Growth	G21 ASTM - Backing
Asthma and Allergy Friendly™	ASP: 05-01/101	Certified Compliant
VOC	<10µg/m³	ASTM D5116 (small chamber)
Phthalate-free technology	—	YES
REACH Compliant	—	YES
Heavy Metals	—	NO
ISO 9001	—	YES
ISO 14001	—	YES

1. Color: As available from the indoor resilient athletic surfacing manufacturer’s standard range.
2. Hardwood Design Series: High definition printing for a realistic wood surface appearance as available from the indoor resilient athletic surfacing manufacturer’s standard range.
3. Texture: Texture to remain consistent between solid colors and wood design when blending colors.

C. Welding Rod: As supplied by the indoor resilient athletic surfacing manufacturer or supplier.
1. Color to blend with the indoor resilient athletic surfacing color or design.
2. All seams shall be welded to create a monolithic and impermeable surface.

D. Adhesive: As approved by the indoor resilient athletic surfacing manufacturer.
E. Game Line Paint and Primer: As approved by the indoor resilient athletic surfacing manufacturer.

PART 3 - EXECUTION

3.1 *EXAMINATION*

A. It is the responsibility of the general contractor/construction manager to ensure that project/site conditions are acceptable for the installation of the indoor resilient athletic flooring.
B. Verify that the area in which the indoor resilient athletic surfacing will be installed is dry and weather tight. Verify that permanent heat, light and ventilation are installed and operable.
C. Verify that all other work that could cause damage, dirt and dust or interrupt the normal pace of the indoor resilient athletic flooring installation is completed or suspended.
D. Verify that there is a stable room temperature of at least 65◦F.
E. Verify that there are no foreign materials or objects on the subfloor and that the subfloor is clean and ready for installation.
F. *For GreenLay™ Installation to Concrete Subfloor: moisture content less than 92% RH when tested per ASTM F2170.*
G. Follow Fieldturf USA, Inc. installation recommendations.
H. Do not average the results of the tests. Report all field test results in writing to the General Contractor, Architect, and End User prior to installation.
I. Verify that the concrete subfloor surface pH level is within the 7 - 10 range.
J. Document the results confirming the slab is within manufacturer's tolerances for slab deviation.

3.2 *PREPARATION OF SURFACES*

A. Sand the entire surface of the concrete slab.
B. Sweep the concrete slab so as to remove all dirt and dust. If a sweeping compound is to be used it must be a sweeping compound that does not contain oil or other items that may inhibit the adhesive bond.
C. Slab must be dust free. In the event that dust impairs adhesive bond, priming the slab prior to application of adhesive may be necessary. Follow installation guidelines.
D. Follow OSHA guidelines

3.3 *INSTALLATION*

A. The installation area shall be closed to all traffic and activity for a period to be set by the indoor resilient athletic surfacing installer. The indoor resilient athletic surfacing installation shall not begin until the installer is familiar with the existing conditions.
B. All necessary precautions should be taken to minimize noise, smell, dust, the use of hazardous materials and any other items that may inconvenience others.
C. Install the indoor resilient athletic surfacing in strict accordance with the indoor resilient athletic surfacing manufacturer's written instructions.
D. Install the indoor resilient athletic surfacing minimizing cross seams. Provide a seam diagram during the submittal process for approval prior to installation. Vinyl Sheet Flooring Seams: Comply with ASTM F 1516. Rout joints and heat weld to permanently and seamlessly fuse sections together.
E. Paint game lines using approved game line paint primer and game line paint in strict accordance with the game line paint manufacturer's instructions.
F. Install appropriate threshold plates or transition strips where necessary.

3.5 *CLEANING*

A. Remove all unused materials, tools, and equipment and dispose of any debris properly. Clean the indoor resilient athletic surfacing in accordance with the manufacturer's instructions.

3.6 *PROTECTION*

A. If required, protect the indoor resilient athletic surfacing from damage using coverings approved by the manufacturer until acceptance of work by the customer or their authorized representative.

3.7 *RELATED STANDARDS AND GUIDELINES*

A. ASTM F2170 "Standard Test Method for Determining Relative Humidity In Concrete Floor Slabs Using In-Situ Probes"
B. ASTM F710 "Standard Practice for Preparing Concrete Floors to Receive Resilient Flooring"
C. ACI 302.2R-06 "Guideline for Concrete Slabs that Receive Moisture-Sensitive Flooring Materials"
D. ASTM F2772-11 "Standard Specification for Athletic Performance Properties of Indoor Sports Floor Systems"

END OF SECTION

SECTION 09 65 66
ARCHITECTURAL SPECIFICATIONS FOR INDOOR RESILIENT ATHLETIC SURFACING

PART 1 – GENERAL

1.1 *SECTION INCLUDES*

A. Supply and installation of the indoor resilient multipurpose surfacing
B. Application of the game lines
C. References for the correct construction and preparation of concrete slabs to receive resilient flooring.

1.2 *SUBMITTALS*

A. Product Data:
   1. Manufacturer's promotional brochures, specifications and installation instructions
B. Manufacturer Certifications:
   1. Provide certification that accurately identifies the Original Equipment Manufacturer (OEM) of flooring furnished for this project including manufacturer's name, address and factory location.
   2. Suppliers of private label flooring for this project must identify themselves as such and fully disclose the OEM information listed above.
   3. All "manufacturer" requirements in these specifications must be complied with by the OEM, including warranties, certifications, qualifications, product data, test results, environmental requirements, performance data, etc.
C. Samples:
   1. Submit for selection and approval three (3) sets of the indoor resilient multipurpose surfacing, manufacturer's brochures, samples or sample boards of all of the available colors, textures and styles.
   2. Submit color samples of all the available game line paint colors for selection and approval.
D. Closeout Submittals:
   1. Submit three (3) copies of the indoor resilient multipurpose surfacing and manufacturer's maintenance instructions.
   2. Submit three (3) copies of the material and installation warranties as specified.

1.3 *QUALITY ASSURANCE*

A. Qualifications:
   1. The indoor resilient multipurpose surfacing shall have been actively marketed for a minimum of ten (10) years.
   2. The indoor resilient multipurpose surfacing shall be manufactured in an ISO 9001 certified plant.
   3. The indoor resilient multipurpose surfacing shall be manufactured in an ISO 14001 certified plant.
   4. The indoor resilient multipurpose surfacing supplier shall be an established firm, experienced in the field, and competent in the techniques required by the manufacturer.
   5. The installer of the indoor resilient multipurpose surfacing shall have a minimum of five (5) years of experience in the field installing indoor resilient multipurpose surfacing and have worked on at least five (5) projects of similar size, type and complexity.

B. Certifications:
   1. Installer to submit the indoor resilient athletic surfacing manufacturer's or distributor's certification attesting that they are an approved installer of the indoor resilient multipurpose surfacing.
   2. The ind**o**or resilient multipurpose surfacing manufacturer to submit official ISO 9001 certification for the facility in which the indoor resilient multipurpose surfacing is manufactured.

C. Testing:
   Tests shall be relative for multi-purpose use with certificates from independent testing resources to be made available upon request. Test results shall be performed according to ASTM standard testing procedures including ASTM F2772 "Standard Specification for Athletic Performance Properties of Indoor Sports Floor Systems".

1.4 *DELIVERY, STORAGE AND HANDLING*

A. Delivery:
   Material shall not be delivered until all related work is in place and finished and/or proper storage facilities and conditions can be provided and guaranteed stable according to FieldTurf USA, Inc. recommendations.

B. Storage:
   1. Store the material in a secure, clean and dry location.
   2. Maintain temperature between 55° and 85° Fahrenheit.
   3. Store the indoor resilient athletic surfacing rolls in an upright position on a smooth flat surface immediately upon delivery to jobsite.
   4. Rolls shipped in rigid protective cardboard containers can be laid horizontally prior to unpacking and installation.

1.5 *PROJECT/SITE CONDITIONS*

A. It is the responsibility of the general contractor/construction manager to maintain project/site conditions acceptable for the installation of the indoor resilient multipurpose flooring.

B. The area in which the indoor resilient multipurpose surfacing will be installed shall be dry and weather tight. Permanent heat, light and ventilation shall be installed and operable.

C. All other trades shall have completed their work prior to the installation of the resilient athletic flooring. The general contractor or construction manager shall maintain a secure and clean working environment before, during and after the installation.

D. Maintain a stable room temperature of at least 65°F for a minimum of one (1) week prior to, during and thereafter installation.

E. An effective low-permeance vapor barrier is placed directly beneath the concrete subfloor. For "on" or "below grade" installations, it is recommended to provide a permanent vapor barrier resistant to long term hydrostatic pressure/moisture exposure. Protrusions should be sealed to prevent moisture migration into the slab. Moisture should not be allowed to enter the slab after the completed construction.

F. Concrete subfloor surface pH level within the 7 to 10 range dependent upon installation type.

G. Concrete subfloor should be no greater than 1/8" within a 10 ft diameter. This tolerance can be measured in accordance with ASTM E1155. A specified (F_F) of 50 and an (F_L) of 30 should reach this degree of floor flatness and floor level. There is no numerical correlation between F numbers and the deviation from the straight

edge. However, the above specified numbers should achieve a flat floor with minimal deviation in the slab. Reference ACI 117 and ACI 302.1R. The general contractor should provide a certificate of compliance with the above recommendations.

H. Concrete subfloor must be clean and free of all foreign materials or objects including, but not limited to, curing compounds and sealers.

I. Fill cracks, grooves, voids, depressions, and other minor imperfections. Follow the manufacturer's directions. Moveable joints must be treated utilizing specific transitioning joint devices depending upon the architect's recommendations. Follow current ASTM F710 guidelines for the preparation of concrete slabs to receive resilient flooring.

J. Refer to ACI 302.2R "Guidelines for Concrete Slabs that Receive Moisture-Sensitive Flooring Materials" for concrete design and construction.

K. Concrete slab shall be fortified with continual steel reinforcement. Fiber reinforcement alone shall not be considered adequate fortification.

1.6 *WARRANTY*

A. Special Limited Warranty:
   1. Manufacturer's standard form in which manufacturer agrees to repair or replace sports flooring including labor that fails within specified warranty period.

B. Material warranty must be direct from the product manufacturer.
   1. Material warranties must come from original manufacturer or division thereof. Private label warranties from distributors or brokers are not valid. Supply original point of manufacturing upon request.

C. Failures include, but are not limited to, the following:
   1. Material manufacturing defects.
   2. Surface wear and deterioration to the point of wear-through of wear layer per ASTM F410/ASTM F1303.
   3. Failure due to substrate moisture exposure exceeding 98 percent relative humidity when tested according to ASTM F2170.

D. Warranty Period:
   1. <u>For material defects and surface wear-through:</u> **25** years from date of substantial completion.
   2. <u>For moisture vapor tolerance:</u> **25** years from date of substantial completion.

E. Installer's Limited Warranty:
   1. Installer's standard form in which installer agrees to repair or replace sports flooring that fails due to poor workmanship or faulty installation within the specified warranty period.
   2. Warranty Period: 2 years from date of substantial completion.

1.7 *ADDITIONAL MATERIALS*

A. Furnish to the owner additional materials containing a total of at least 1% of each different color or design of the indoor resilient athletic surfacing used on the project.

1.8 *LEED™ CERTIFICATION*

A. The indoor resilient athletic surfacing should be able to help this facility to achieve points towards *LEED™ certification.* Flooring system must be certified by FloorScore.
B. LEED categories positively affected by the indoor resilient athletic surfacing:

LEED™ V4 Credit		Contribution
Materials & Resources: Building Product Disclosure & Optimization (BPDO)		
MRc3: Sourcing of Raw Materials	Options 1 & 2	2 Points
MRc4: Material Ingredients	Option 1	1 Point
MRc5: Construction and Demolition Management	Reclamation and Recycling	ReStart® Program
Indoor Environmental Quality		
EQc2: Low-Emitting Materials	TVOC: 0.5 mg/m3 or less	FloorScore®

PART 2 - PRODUCTS

2.1 *MANUFACTURERS*

A. The basis of the design for the indoor resilient multipurpose surfacing is Omnisports Active+ as manufactured by Tarkett.
B. All other installation accessories and related components must be either made or approved by the indoor resilient athletic surfacing manufacturer.
C. Other products may be approved as equal if deemed qualified and submitted in accordance with the General Conditions.
D. Test reports confirming compliance from an independent sports laboratory must be provided along with samples, technical data, installation, maintenance, and warranty prior to acceptance as an alternative product.

2.2 *MATERIALS*

A. Omnisports Active+ - Prefabricated sport surface 8.1 mm (0.14”) with wood flooring design, single surface embossing and Extreme Three (3) Layers technology (X3LT) as supplied by Tarkett.
   1. Embossing of wood design and solid colors must be the same; varying embossing or surface textures will not be allowed.
   2. Printing of wood design shall closely resemble standard wood strip flooring in size, color, board length, and grain appearance.
   3. Surface embossing combined with TopClean XP must offer proper balance of surface friction per the ASTM F2772.
   4. Surface embossing combined with TopClean XP must provide resistance to stains and scratches. Surface profile must not incorporate linear embossing.
   5. The wood design shall be protected by a clear layer of pure PVC (Polyvinyl Chloride) and TopClean XP, a factory-applied UV cured urethane treatment.
   6. Extreme Three (3) Layers technology (X3LT) includes Omnisports XCS cushion, glass veil and calendared sheet must offer improved shock absorbing comfort while providing better indentation recovery

7. The XCS cushion force reduction layer shall be high-density closed cell PVC foam with honeycomb embossing, and is applied in one continuous manufacturing process.
8. Laminated or adhered foam layers will not be allowed.
9. Field constructed products will not be accepted.

A. Physical properties of the indoor resilient athletic surfacing shall conform to the following minimums:

Width	—	6’ 6” (2 m)
Length	—	85’ (25.9m) approx.
Wear Layer	—	2 mm
Total Thickness	—	8.1 mm
Wear Layer	Type 1– Grade 1	ASTM F1303/F410
Vertical Deformation	PASSED	ASTM F2772
Rolling Load	PASSED	0.30 (EN 1569 {11/1999})
Surface Finish Effect	PASSED	ASTM F2772 (80 – 110)
Chemical Resistance	Excellent	ASTM F925
Impact Resistance	PASSED	EN 1717
Abrasion Resistance	PASSED	0.10 (EN ISO 5470-1 {06/1999})
Static Load Limit	PASSED	ASTM F970- Load 175 Lbs
Sound Insulation	Excellent	+/= 19 dB (ISO 717/2)
In-Room Sound Insulation	Excellent	61dB (NF S31-074)
Ball Rebound	PASSED	ASTM F2772 > 90%
Force Reduction	PASSED	ASTM F2772 Class 3
Fire Rating	PASSED	ASTM E648 Class 1
Microbial Assays Test	No Growth	G21 ASTM - Backing
Asthma and Allergy Friendly™	ASP: 05-01/101	Certified Compliant
Phthalate-free technology	—	YES
REACH Compliant	—	YES
Heavy Metals	—	NO
ISO 9001	—	YES
ISO 14001	—	YES

1. Color: As available from the indoor resilient athletic surfacing manufacturer’s standard range.
2. Hardwood Design Series: High definition printing for a realistic wood surface appearance as available from the indoor resilient athletic surfacing manufacturer’s standard range.
3. Texture: Texture to remain consistent between solid colors and wood design when blending colors.

C. Welding Rod: As supplied by the indoor resilient athletic surfacing manufacturer or supplier.
   1. Color to blend with the indoor resilient athletic surfacing color or design.
   2. All seams shall be welded to create a monolithic and impermeable surface.

D. Adhesive: As approved by the indoor resilient athletic surfacing manufacturer.

E. Game Line Paint and Primer: As approved by the indoor resilient athletic surfacing manufacturer.

PART 3 - EXECUTION

3.1 *EXAMINATION*

A. It is the responsibility of the general contractor/construction manager to ensure that project/site conditions are acceptable for the installation of the indoor resilient athletic flooring.
B. Verify that the area in which the indoor resilient athletic surfacing will be installed is dry and weather tight. Verify that permanent heat, light and ventilation are installed and operable.
C. Verify that all other work that could cause damage, dirt and dust or interrupt the normal pace of the indoor resilient athletic flooring installation is completed or suspended.
D. Verify that there is a stable room temperature of at least 65◦F.
E. Verify that there are no foreign materials or objects on the subfloor and that the subfloor is clean and ready for installation.
F. *Direct Full Spread Adhering to Concrete Subfloor HS Sports Spray : moisture content less than 90% RH when tested per ASTM F2170.*
G. Follow Fieldturf USA, Inc installation recommendations.
H. Do not average the results of the tests. Report all field test results in writing to the General Contractor, Architect, and End User prior to installation.
I. Verify that the concrete subfloor surface pH level is within the 7 - 10 range.
J. Document the results indicating the slab is within manufacturer's tolerances for slab deviation.

3.2 *PREPARATION OF SURFACES*

A. Sand the entire surface of the concrete slab.
B. Sweep the concrete slab so as to remove all dirt and dust. If a sweeping compound is to be used it must be a sweeping compound that does not contain oil or other items that may inhibit the adhesive bond.
C. Slab must be dust free. In the event that dust impairs adhesive bond, priming the slab prior to application of adhesive may be necessary. Follow installation guidelines.

3.3 *INSTALLATION*

A. The installation area shall be closed to all traffic and activity for a period to be set by the indoor resilient athletic surfacing installer. The indoor resilient athletic surfacing installation shall not begin until the installer is familiar with the existing conditions.
B. All necessary precautions should be taken to minimize noise, smell, dust, the use of hazardous materials and any other items that may inconvenience others.
C. Install the indoor resilient athletic surfacing in strict accordance with the indoor resilient athletic surfacing manufacturer's written instructions.
D. Install the indoor resilient athletic surfacing minimizing cross seams. Provide a seam diagram during the submittal process for approval prior to installation. Vinyl Sheet Flooring Seams: Comply with ASTM F 1516. Rout joints and heat weld to permanently and seamlessly fuse sections together. Apply transitions at doorways as needed.
E. Paint game lines using approved game line paint primer and game line paint in strict accordance with the game line paint manufacturer's instructions.
F. Install appropriate threshold plates or transition strips where necessary.

3.5 *CLEANING*

A. Remove all unused materials, tools, and equipment and dispose of any debris properly. Clean the indoor resilient athletic surfacing in accordance with the manufacturer's instructions.

3.6 *PROTECTION*

A. If required, protect the indoor resilient athletic surfacing from damage using coverings approved by the manufacturer until acceptance of work by the customer or their authorized representative.

3.7 *RELATED STANDARDS AND GUIDELINES*

A. ASTM F2170 "Standard Test Method for Determining Relative Humidity In Concrete Floor Slabs Using In-Situ Probes"
B. ASTM F710 "Standard Practice for Preparing Concrete Floors to Receive Resilient Flooring"
C. ACI 302.2R-06 "Guideline for Concrete Slabs that Receive Moisture-Sensitive Flooring Materials"
D. ASTM F2772-11 "Standard Specification for Athletic Performance Properties of Indoor Sports Floor Systems"

END OF SECTION

SECTION 09 65 66
ARCHITECTURAL SPECIFICATIONS FOR INDOOR RESILIENT ATHLETIC SURFACING

PART 1 – GENERAL

1.1 *SECTION INCLUDES*

A. Supply and installation of the indoor resilient multipurpose surfacing
B. Application of the game lines
C. References for the correct construction and preparation of concrete slabs to receive resilient flooring.

1.2 *SUBMITTALS*

A. Product Data:
   1. Manufacturer's promotional brochures, specifications and installation instructions
B. Manufacturer Certifications:
   1. Provide certification that accurately identifies the Original Equipment Manufacturer (OEM) of flooring furnished for this project including manufacturer's name, address and factory location.
   2. Suppliers of private label flooring for this project must identify themselves as such and fully disclose the OEM information listed above.
   3. All "manufacturer" requirements in these specifications must be complied with by the OEM, including warranties, certifications, qualifications, product data, test results, environmental requirements, performance data, etc.
C. Samples:
   1. Submit for selection and approval three (3) sets of the indoor resilient multipurpose surfacing, manufacturer's brochures, samples or sample boards of all of the available colors, textures and styles.
   2. Submit color samples of all the available game line paint colors for selection and approval.
D. Closeout Submittals:
   1. Submit three (3) copies of the indoor resilient multipurpose surfacing and manufacturer's maintenance instructions.
   2. Submit three (3) copies of the material and installation warranties as specified.

1.3 *QUALITY ASSURANCE*

A. Qualifications:
   1. The indoor resilient multipurpose surfacing shall have been actively marketed for a minimum of ten (10) years.
   2. The indoor resilient multipurpose surfacing shall be manufactured in an ISO 9001 certified plant.
   3. The indoor resilient multipurpose surfacing shall be manufactured in an ISO 14001 certified plant.
   4. The indoor resilient multipurpose surfacing supplier shall be an established firm, experienced in the field, and competent in the techniques required by the manufacturer.
   5. The installer of the indoor resilient multipurpose surfacing shall have a minimum of five (5) years of experience in the field installing indoor resilient multipurpose surfacing and have worked on at least five (5) projects of similar size, type and complexity.

B. Certifications:
   1. Installer to submit the indoor resilient athletic surfacing manufacturer's or distributor's certification attesting that they are an approved installer of the indoor resilient multipurpose surfacing.
   2. The ind**o**or resilient multipurpose surfacing manufacturer to submit official ISO 9001 certification for the facility in which the indoor resilient multipurpose surfacing is manufactured.

C. Testing:
   Tests shall be relative for multi-purpose use with certificates from independent testing resources to be made available upon request. Test results shall be performed according to ASTM standard testing procedures including ASTM F2772 "Standard Specification for Athletic Performance Properties of Indoor Sports Floor Systems".

1.4 *DELIVERY, STORAGE AND HANDLING*

A. Delivery:
   Material shall not be delivered until all related work is in place and finished and/or proper storage facilities and conditions can be provided and guaranteed stable according to FieldTurf USA, Inc. recommendations.

B. Storage:
   1. Store the material in a secure, clean and dry location.
   2. Maintain temperature between 55° and 85° Fahrenheit.
   3. Store the indoor resilient athletic surfacing rolls in an upright position on a smooth flat surface immediately upon delivery to jobsite.
   4. Rolls shipped in rigid protective cardboard containers can be laid horizontally prior to unpacking and installation.

1.5 *PROJECT/SITE CONDITIONS*

A. It is the responsibility of the general contractor/construction manager to maintain project/site conditions acceptable for the installation of the indoor resilient multipurpose flooring.

B. The area in which the indoor resilient multipurpose surfacing will be installed shall be dry and weather tight. Permanent heat, light and ventilation shall be installed and operable.

C. All other trades shall have completed their work prior to the installation of the resilient athletic flooring. The general contractor or construction manager shall maintain a secure and clean working environment before, during and after the installation.

D. Maintain a stable room temperature of at least 65°F for a minimum of one (1) week prior to, during and thereafter installation.

E. An effective low-permeance vapor barrier is placed directly beneath the concrete subfloor. For "on" or "below grade" installations, it is recommended to provide a permanent vapor barrier resistant to long term hydrostatic pressure/moisture exposure. Protrusions should be sealed to prevent moisture migration into the slab. Moisture should not be allowed to enter the slab after the completed construction.

F. Concrete subfloor surface pH level within the 7 to 11 range dependent upon installation type.

G. Concrete subfloor should be no greater than 1/8" within a 10 ft diameter. This tolerance can be measured in accordance with ASTM E1155. A specified (F_F) of 50 and an (F_L) of 30 should reach this degree of floor flatness and floor level. There is no numerical correlation between F numbers and the deviation from the straight

edge. However, the above specified numbers should achieve a flat floor with minimal deviation in the slab. Reference ACI 117 and ACI 302.1R. The general contractor should provide a certificate of compliance with the above recommendations.

H. Concrete subfloor must be clean and free of all foreign materials or objects including, but not limited to, curing compounds and sealers.

I. Fill cracks, grooves, voids, depressions, and other minor imperfections. Follow the manufacturer's directions. Moveable joints must be treated utilizing specific transitioning joint devices depending upon the architect's recommendations. Follow current ASTM F710 guidelines for the preparation of concrete slabs to receive resilient flooring.

J. Refer to ACI 302.2R "Guidelines for Concrete Slabs that Receive Moisture-Sensitive Flooring Materials" for concrete design and construction.

K. Concrete slab shall be fortified with continual steel reinforcement. Fiber reinforcement alone shall not be considered adequate fortification.

1.6 *WARRANTY*

A. Special Limited Warranty:
   1. Manufacturer's standard form in which manufacturer agrees to repair or replace sports flooring including labor that fails within specified warranty period.

B. Material warranty must be direct from the product manufacturer.
   1. Material warranties must come from original manufacturer or division thereof. Private label warranties from distributors or brokers are not valid. Supply original point of manufacturing upon request.

C. Failures include, but are not limited to, the following:
   1. Material manufacturing defects.
   2. Surface wear and deterioration to the point of wear-through of wear layer per ASTM F410/ASTM F1303.
   3. Failure due to substrate moisture exposure exceeding 98 percent relative humidity when tested according to ASTM F2170.

D. Warranty Period:
   1. <u>For material defects and surface wear-through:</u> **25** years from date of substantial completion.
   2. <u>For moisture vapor tolerance:</u> **25** years from date of substantial completion.

E. Installer's Limited Warranty:
   1. Installer's standard form in which installer agrees to repair or replace sports flooring that fails due to poor workmanship or faulty installation within the specified warranty period.
   2. Warranty Period: 2 years from date of substantial completion.

1.7 *ADDITIONAL MATERIALS*

A. Furnish to the owner additional materials containing a total of at least 1% of each different color or design of the indoor resilient athletic surfacing used on the project.

1.8 *LEED™ CERTIFICATION*

A. The indoor resilient athletic surfacing should be able to help this facility to achieve points towards *LEED™ certification.* Flooring system must be certified by FloorScore.
B. LEED categories positively affected by the indoor resilient athletic surfacing:

LEED™ V4 Credit		Contribution
Materials & Resources: Building Product Disclosure & Optimization (BPDO)		
MRc3: Sourcing of Raw Materials	Options 1 & 2	2 Points
MRc4: Material Ingredients	Option 1	1 Point
MRc5: Construction and Demolition Management	Reclamation and Recycling	ReStart® Program
Indoor Environmental Quality		
EQc2: Low-Emitting Materials	TVOC: 0.5 mg/m3 or less	FloorScore®

PART 2 - PRODUCTS

2.1 *MANUFACTURERS*

A. The basis of the design for the indoor resilient multipurpose surfacing is Omnisports Active+ as manufactured by Tarkett.
B. All other installation accessories and related components must be either made or approved by the indoor resilient athletic surfacing manufacturer.
C. Other products may be approved as equal if deemed qualified and submitted in accordance with the General Conditions.
D. Test reports confirming compliance from an independent sports laboratory must be provided along with samples, technical data, installation, maintenance, and warranty prior to acceptance as an alternative product.

2.2 *MATERIALS*

A. Omnisports Active+ - Prefabricated sport surface 8.1 mm (0.14”) with wood flooring design, single surface embossing and Extreme Three (3) Layers technology (X3LT) as supplied by Tarkett.
   1. Embossing of wood design and solid colors must be the same; varying embossing or surface textures will not be allowed.
   2. Printing of wood design shall closely resemble standard wood strip flooring in size, color, board length, and grain appearance.
   3. Surface embossing combined with TopClean XP must offer proper balance of surface friction per the ASTM F2772.
   4. Surface embossing combined with TopClean XP must provide resistance to stains and scratches. Surface profile must not incorporate linear embossing.
   5. The wood design shall be protected by a clear layer of pure PVC (Polyvinyl Chloride) and TopClean XP, a factory-applied UV cured urethane treatment.
   6. Extreme Three (3) Layers technology (X3LT) includes Omnisports XCS cushion, glass veil and calendared sheet must offer improved shock absorbing comfort while providing better indentation recovery

7. The XCS cushion force reduction layer shall be high-density closed cell PVC foam with honeycomb embossing, and is applied in one continuous manufacturing process.
8. Laminated or adhered foam layers will not be allowed.
9. Field constructed products will not be accepted.

A. Physical properties of the indoor resilient athletic surfacing shall conform to the following minimums:

Width	—	6’ 6” (2 m)
Length	—	85’ (25.9m) approx.
Wear Layer	—	2 mm
Total Thickness	—	8.1 mm
Wear Layer	Type 1– Grade 1	ASTM F1303/F410
Vertical Deformation	PASSED	ASTM F2772
Rolling Load	PASSED	0.30 (EN 1569 {11/1999})
Surface Finish Effect	PASSED	ASTM F2772 (80 – 110)
Chemical Resistance	Excellent	ASTM F925
Impact Resistance	PASSED	EN 1717
Abrasion Resistance	PASSED	0.10 (EN ISO 5470-1 {06/1999})
Static Load Limit	PASSED	ASTM F970- Load 175 Lbs
Sound Insulation	Excellent	+/= 19 dB (ISO 717/2)
In-Room Sound Insulation	Excellent	61dB (NF S31-074)
Ball Rebound	PASSED	ASTM F2772 > 90%
Force Reduction	PASSED	ASTM F2772 Class 3
Fire Rating	PASSED	ASTM E648 Class 1
Microbial Assays Test	No Growth	G21 ASTM - Backing
Asthma and Allergy Friendly™	ASP: 05-01/101	Certified Compliant
Phthalate-free technology	—	YES
VOC	<10µg/m³	ASTM D5116 (small chamber)
REACH Compliant	—	YES
Heavy Metals	—	NO
ISO 9001	—	YES
ISO 14001	—	YES

1. Color: As available from the indoor resilient athletic surfacing manufacturer’s standard range.
2. Hardwood Design Series: High definition printing for a realistic wood surface appearance as available from the indoor resilient athletic surfacing manufacturer’s standard range.
3. Texture: Texture to remain consistent between solid colors and wood design when blending colors.

C. Welding Rod: As supplied by the indoor resilient athletic surfacing manufacturer or supplier.
   1. Color to blend with the indoor resilient athletic surfacing color or design.
   2. All seams shall be welded to create a monolithic and impermeable surface.

D. Adhesive: As approved by the indoor resilient athletic surfacing manufacturer.

E. Game Line Paint and Primer: As approved by the indoor resilient athletic surfacing manufacturer.

PART 3 - EXECUTION

3.1 *EXAMINATION*

A. It is the responsibility of the general contractor/construction manager to ensure that project/site conditions are acceptable for the installation of the indoor resilient athletic flooring.
B. Verify that the area in which the indoor resilient athletic surfacing will be installed is dry and weather tight. Verify that permanent heat, light and ventilation are installed and operable.
C. Verify that all other work that could cause damage, dirt and dust or interrupt the normal pace of the indoor resilient athletic flooring installation is completed or suspended.
D. Verify that there is a stable room temperature of at least 65◦F.
E. Verify that there are no foreign materials or objects on the subfloor and that the subfloor is clean and ready for installation.
F. *Direct Full Spread Adhering to Concrete Subfloor Multi-Poxy : moisture content less than 98% RH when tested per ASTM F2170.*
G. Follow Fieldturf USA, Inc. installation recommendations.
H. Do not average the results of the tests. Report all field test results in writing to the General Contractor, Architect, and End User prior to installation.
I. Verify that the concrete subfloor surface pH level is within the 7 - 11 range.
J. Document the results confirming the slab is within manufacturer's tolerances for slab deviation.

3.2 *PREPARATION OF SURFACES*

A. Sand the entire surface of the concrete slab.
B. Sweep the concrete slab so as to remove all dirt and dust. If a sweeping compound is to be used it must be a sweeping compound that does not contain oil or other items that may inhibit the adhesive bond.
C. Slab must be dust free. In the event that dust impairs adhesive bond, priming the slab prior to application of adhesive may be necessary. Follow installation guidelines.
D. Follow OSHA guidelines.

3.3 *INSTALLATION*

A. The installation area shall be closed to all traffic and activity for a period to be set by the indoor resilient athletic surfacing installer. The indoor resilient athletic surfacing installation shall not begin until the installer is familiar with the existing conditions.
B. All necessary precautions should be taken to minimize noise, smell, dust, the use of hazardous materials and any other items that may inconvenience others.
C. Install the indoor resilient athletic surfacing in strict accordance with the indoor resilient athletic surfacing manufacturer's written instructions.
D. Install the indoor resilient athletic surfacing minimizing cross seams. Provide a seam diagram during the submittal process for approval prior to installation. Vinyl Sheet Flooring Seams: Comply with ASTM F 1516. Rout joints and heat weld to permanently and seamlessly fuse sections together.
E. Paint game lines using approved game line paint primer and game line paint in strict accordance with the game line paint manufacturer's instructions.
F. Install appropriate threshold plates or transition strips where necessary.

3.5 *CLEANING*

A. Remove all unused materials, tools, and equipment and dispose of any debris properly. Clean the indoor resilient athletic surfacing in accordance with the manufacturer's instructions.

3.6 *PROTECTION*

A. If required, protect the indoor resilient athletic surfacing from damage using coverings approved by the manufacturer until acceptance of work by the customer or their authorized representative.

3.7 *RELATED STANDARDS AND GUIDELINES*

A. ASTM F2170 "Standard Test Method for Determining Relative Humidity In Concrete Floor Slabs Using In-Situ Probes"
B. ASTM F710 "Standard Practice for Preparing Concrete Floors to Receive Resilient Flooring"
C. ACI 302.2R-06 "Guideline for Concrete Slabs that Receive Moisture-Sensitive Flooring Materials"
D. ASTM F2772-11 "Standard Specification for Athletic Performance Properties of Indoor Sports Floor Systems"

END OF SECTION

SECTION 09 65 66
ARCHITECTURAL SPECIFICATIONS FOR INDOOR RESILIENT ATHLETIC SURFACING

PART 1 – GENERAL

1.1 *SECTION INCLUDES*

A. Supply and installation of the indoor resilient multipurpose surfacing
B. Application of the game lines
C. References for the correct construction and preparation of concrete slabs to receive resilient flooring.

1.2 *SUBMITTALS*

A. Product Data:
   1. Manufacturer's promotional brochures, specifications and installation instructions
B. Manufacturer Certifications:
   1. Provide certification that accurately identifies the Original Equipment Manufacturer (OEM) of flooring furnished for this project including manufacturer's name, address and factory location.
   2. Suppliers of private label flooring for this project must identify themselves as such and fully disclose the OEM information listed above.
   3. All "manufacturer" requirements in these specifications must be complied with by the OEM, including warranties, certifications, qualifications, product data, test results, environmental requirements, performance data, etc.
C. Samples:
   1. Submit for selection and approval three (3) sets of the indoor resilient multipurpose surfacing, manufacturer's brochures, samples or sample boards of all of the available colors, textures and styles.
   2. Submit color samples of all the available game line paint colors for selection and approval.
D. Closeout Submittals:
   1. Submit three (3) copies of the indoor resilient multipurpose surfacing and manufacturer's maintenance instructions.
   2. Submit three (3) copies of the material and installation warranties as specified.

1.3 *QUALITY ASSURANCE*

A. Qualifications:
   1. The indoor resilient multipurpose surfacing shall have been actively marketed for a minimum of ten (10) years.
   2. The indoor resilient multipurpose surfacing shall be manufactured in an ISO 9001 certified plant.
   3. The indoor resilient multipurpose surfacing shall be manufactured in an ISO 14001 certified plant.
   4. The indoor resilient multipurpose surfacing supplier shall be an established firm, experienced in the field, and competent in the techniques required by the manufacturer.
   5. The installer of the indoor resilient multipurpose surfacing shall have a minimum of five (5) years of experience in the field installing indoor resilient multipurpose surfacing and have worked on at least five (5) projects of similar size, type and complexity.

B. Certifications:
   1. Installer to submit the indoor resilient athletic surfacing manufacturer's or distributor's certification attesting that they are an approved installer of the indoor resilient multipurpose surfacing.
   2. The ind**o**or resilient multipurpose surfacing manufacturer to submit official ISO 9001 certification for the facility in which the indoor resilient multipurpose surfacing is manufactured.

C. Testing:
   Tests shall be relative for multi-purpose use with certificates from independent testing resources to be made available upon request. Test results shall be performed according to ASTM standard testing procedures including ASTM F2772 "Standard Specification for Athletic Performance Properties of Indoor Sports Floor Systems".

1.4 *DELIVERY, STORAGE AND HANDLING*

A. Delivery:
   Material shall not be delivered until all related work is in place and finished and/or proper storage facilities and conditions can be provided and guaranteed stable according to FieldTurf USA, Inc. recommendations.

B. Storage:
   1. Store the material in a secure, clean and dry location.
   2. Maintain temperature between 55° and 85° Fahrenheit.
   3. Store the indoor resilient athletic surfacing rolls in an upright position on a smooth flat surface immediately upon delivery to jobsite.
   4. Rolls shipped in rigid protective cardboard containers can be laid horizontally prior to unpacking and installation.

1.5 *PROJECT/SITE CONDITIONS*

A. It is the responsibility of the general contractor/construction manager to maintain project/site conditions acceptable for the installation of the indoor resilient multipurpose flooring.

B. The area in which the indoor resilient multipurpose surfacing will be installed shall be dry and weather tight. Permanent heat, light and ventilation shall be installed and operable.

C. All other trades shall have completed their work prior to the installation of the resilient athletic flooring. The general contractor or construction manager shall maintain a secure and clean working environment before, during and after the installation.

D. Maintain a stable room temperature of at least 65°F for a minimum of one (1) week prior to, during and thereafter installation.

E. An effective low-permeance vapor barrier is placed directly beneath the concrete subfloor. For "on" or "below grade" installations, it is recommended to provide a permanent vapor barrier resistant to long term hydrostatic pressure/moisture exposure. Protrusions should be sealed to prevent moisture migration into the slab. Moisture should not be allowed to enter the slab after the completed construction.

F. Concrete subfloor surface pH level within the 7 to 10 range dependent upon installation type.

G. Concrete subfloor should be no greater than 1/8" within a 10 ft diameter. This tolerance can be measured in accordance with ASTM E1155. A specified (F_F) of 50 and an (F_L) of 30 should reach this degree of floor flatness and floor level. There is no numerical correlation between F numbers and the deviation from the straight

edge. However, the above specified numbers should achieve a flat floor with minimal deviation in the slab. Reference ACI 117 and ACI 302.1R. The general contractor should provide a certificate of compliance with the above recommendations.

H. Concrete subfloor must be clean and free of all foreign materials or objects including, but not limited to, curing compounds and sealers.

I. Fill cracks, grooves, voids, depressions, and other minor imperfections. Follow the manufacturer's directions. Moveable joints must be treated utilizing specific transitioning joint devices depending upon the architect's recommendations. Follow current ASTM F710 guidelines for the preparation of concrete slabs to receive resilient flooring.

J. Refer to ACI 302.2R "Guidelines for Concrete Slabs that Receive Moisture-Sensitive Flooring Materials" for concrete design and construction.

K. Concrete slab shall be fortified with continual steel reinforcement. Fiber reinforcement alone shall not be considered adequate fortification.

1.6 *WARRANTY*

A. Special Limited Warranty:
   1. Manufacturer's standard form in which manufacturer agrees to repair or replace sports flooring including labor that fails within specified warranty period.

B. Material warranty must be direct from the product manufacturer.
   1. Material warranties must come from original manufacturer or division thereof. Private label warranties from distributors or brokers are not valid. Supply original point of manufacturing upon request.

C. Failures include, but are not limited to, the following:
   1. Material manufacturing defects.
   2. Surface wear and deterioration to the point of wear-through of wear layer per ASTM F410/ASTM F1303.
   3. Failure due to substrate moisture exposure exceeding 98 percent relative humidity when tested according to ASTM F2170.

D. Warranty Period:
   1. <u>For material defects and surface wear-through:</u> **25** years from date of substantial completion.
   2. <u>For moisture vapor tolerance:</u> **25** years from date of substantial completion.

E. Installer's Limited Warranty:
   1. Installer's standard form in which installer agrees to repair or replace sports flooring that fails due to poor workmanship or faulty installation within the specified warranty period.
   2. Warranty Period: 2 years from date of substantial completion.

1.7 *ADDITIONAL MATERIALS*

A. Furnish to the owner additional materials containing a total of at least 1% of each different color or design of the indoor resilient athletic surfacing used on the project.

1.8 *LEED™ CERTIFICATION*

A. The indoor resilient athletic surfacing should be able to help this facility to achieve points towards *LEED™ certification.* Flooring system must be certified by FloorScore.
B. LEED categories positively affected by the indoor resilient athletic surfacing:

LEED™ V4 Credit		Contribution
Materials & Resources: Building Product Disclosure & Optimization (BPDO)		
MRc3: Sourcing of Raw Materials	Options 1 & 2	2 Points
MRc4: Material Ingredients	Option 1	1 Point
MRc5: Construction and Demolition Management	Reclamation and Recycling	ReStart® Program
Indoor Environmental Quality		
EQc2: Low-Emitting Materials	TVOC: 0.5 mg/m3 or less	FloorScore®

PART 2 - PRODUCTS

2.1 *MANUFACTURERS*

A. The basis of the design for the indoor resilient multipurpose surfacing is Omnisports Active+ as manufactured by Tarkett.
B. All other installation accessories and related components must be either made or approved by the indoor resilient athletic surfacing manufacturer.
C. Other products may be approved as equal if deemed qualified and submitted in accordance with the General Conditions.
D. Test reports confirming compliance from an independent sports laboratory must be provided along with samples, technical data, installation, maintenance, and warranty prior to acceptance as an alternative product.

2.2 *MATERIALS*

A. Omnisports Active+ - Prefabricated sport surface 8.1 mm (0.14”) with wood flooring design, single surface embossing and Extreme Three (3) Layers technology (X3LT) as supplied by Tarkett.
   1. Embossing of wood design and solid colors must be the same; varying embossing or surface textures will not be allowed.
   2. Printing of wood design shall closely resemble standard wood strip flooring in size, color, board length, and grain appearance.
   3. Surface embossing combined with TopClean XP must offer proper balance of surface friction per the ASTM F2772.
   4. Surface embossing combined with TopClean XP must provide resistance to stains and scratches. Surface profile must not incorporate linear embossing.
   5. The wood design shall be protected by a clear layer of pure PVC (Polyvinyl Chloride) and TopClean XP, a factory-applied UV cured urethane treatment.
   6. Extreme Three (3) Layers technology (X3LT) includes Omnisports XCS cushion, glass veil and calendared sheet must offer improved shock absorbing comfort while providing better indentation recovery

7. The XCS cushion force reduction layer shall be high-density closed cell PVC foam with honeycomb embossing, and is applied in one continuous manufacturing process.
8. Laminated or adhered foam layers will not be allowed.
9. Field constructed products will not be accepted.

A. Physical properties of the indoor resilient athletic surfacing shall conform to the following minimums:

Width	—	6’ 6” (2 m)
Length	—	85’ (25.9m) approx.
Wear Layer	—	2 mm
Total Thickness	—	8.1 mm
Wear Layer	Type 1– Grade 1	ASTM F1303/F410
Vertical Deformation	PASSED	ASTM F2772
Rolling Load	PASSED	0.30 (EN 1569 {11/1999})
Surface Finish Effect	PASSED	ASTM F2772 (80 – 110)
Chemical Resistance	Excellent	ASTM F925
Impact Resistance	PASSED	EN 1717
Abrasion Resistance	PASSED	0.10 (EN ISO 5470-1 {06/1999})
Static Load Limit	PASSED	ASTM F970- Load 175 Lbs
Sound Insulation	Excellent	+/= 19 dB (ISO 717/2)
In-Room Sound Insulation	Excellent	61dB (NF S31-074)
Ball Rebound	PASSED	ASTM F2772 > 90%
Force Reduction	PASSED	ASTM F2772 Class 3
Fire Rating	PASSED	ASTM E648 Class 1
Microbial Assays Test	No Growth	G21 ASTM - Backing
Asthma and Allergy Friendly™	ASP: 05-01/101	Certified Compliant
Phthalate-free technology	—	YES
REACH Compliant	—	YES
Heavy Metals	—	NO
ISO 9001	—	YES
ISO 14001	—	YES

1. Color: As available from the indoor resilient athletic surfacing manufacturer’s standard range.
2. Hardwood Design Series: A wood look design as available from the indoor resilient athletic surfacing manufacturer’s standard range.
3. Texture: Texture to remain consistent between solid colors and wood design when blending colors.

C. Welding Rod: As supplied by the indoor resilient athletic surfacing manufacturer or supplier.
   1. Color to blend with the indoor resilient athletic surfacing color or design.
   2. All seams shall be welded to create a monolithic and impermeable surface.

D. Adhesive: As approved by the indoor resilient athletic surfacing manufacturer.

E. Game Line Paint and Primer: As approved by the indoor resilient athletic surfacing manufacturer.

PART 3 - EXECUTION

3.1 *EXAMINATION*

A. It is the responsibility of the general contractor/construction manager to ensure that project/site conditions are acceptable for the installation of the indoor resilient athletic flooring.
B. Verify that the area in which the indoor resilient athletic surfacing will be installed is dry and weather tight. Verify that permanent heat, light and ventilation are installed and operable.
C. Verify that all other work that could cause damage, dirt and dust or interrupt the normal pace of the indoor resilient athletic flooring installation is completed or suspended.
D. Verify that there is a stable room temperature of at least 65◦F.
E. Verify that there are no foreign materials or objects on the subfloor and that the subfloor is clean and ready for installation.
F. *Direct Full Spread Adhering to Concrete Subfloor Multi-Set : moisture content less than 83% RH when tested per ASTM F2170.*
G. Follow Fieldturf USA, Inc installation recommendations.
H. Do not average the results of the tests. Report all field test results in writing to the General Contractor, Architect, and End User prior to installation.
I. Verify that the concrete subfloor surface pH level is within the 7 - 10 range.
J. Document the results indicating the slab is within manufacturer's tolerances for slab deviation.

3.2 *PREPARATION OF SURFACES*

A. Sand the entire surface of the concrete slab.
B. Sweep the concrete slab so as to remove all dirt and dust. If a sweeping compound is to be used it must be a sweeping compound that does not contain oil or other items that may inhibit the adhesive bond.
C. Slab must be dust free. In the event that dust impairs adhesive bond, priming the slab prior to application of adhesive may be necessary. Follow installation guidelines.

3.3 *INSTALLATION*

A. The installation area shall be closed to all traffic and activity for a period to be set by the indoor resilient athletic surfacing installer. The indoor resilient athletic surfacing installation shall not begin until the installer is familiar with the existing conditions.
B. All necessary precautions should be taken to minimize noise, smell, dust, the use of hazardous materials and any other items that may inconvenience others.
C. Install the indoor resilient athletic surfacing in strict accordance with the indoor resilient athletic surfacing manufacturer's written instructions.
D. Install the indoor resilient athletic surfacing minimizing cross seams. Provide a seam diagram during the submittal process for approval prior to installation. Vinyl Sheet Flooring Seams: Comply with ASTM F 1516. Rout joints and heat weld to permanently and seamlessly fuse sections together. Apply transitions at doorways as needed.
E. Paint game lines using approved game line paint primer and game line paint in strict accordance with the game line paint manufacturer's instructions.
F. Install appropriate threshold plates or transition strips where necessary.

3.5 *CLEANING*

A. Remove all unused materials, tools, and equipment and dispose of any debris properly. Clean the indoor resilient athletic surfacing in accordance with the manufacturer's instructions.

3.6 *PROTECTION*

A. If required, protect the indoor resilient athletic surfacing from damage using coverings approved by the manufacturer until acceptance of work by the customer or their authorized representative.

3.7 *RELATED STANDARDS AND GUIDELINES*

A. ASTM F2170 "Standard Test Method for Determining Relative Humidity In Concrete Floor Slabs Using In-Situ Probes"
B. ASTM F710 "Standard Practice for Preparing Concrete Floors to Receive Resilient Flooring"
C. ACI 302.2R-06 "Guideline for Concrete Slabs that Receive Moisture-Sensitive Flooring Materials"
D. ASTM F2772-11 "Standard Specification for Athletic Performance Properties of Indoor Sports Floor Systems"

END OF SECTION

SECTION 09 65 66
ARCHITECTURAL SPECIFICATIONS FOR INDOOR RESILIENT ATHLETIC SURFACING

PART 1 – GENERAL

1.1 *SECTION INCLUDES*

A. Supply and installation of the indoor resilient multipurpose surfacing
B. Application of the game lines
C. References for the correct construction and preparation of concrete slabs to receive resilient flooring.

1.2 *SUBMITTALS*

A. Product Data:
   1. Manufacturer's promotional brochures, specifications and installation instructions
B. Manufacturer Certifications:
   1. Provide certification that accurately identifies the Original Equipment Manufacturer (OEM) of flooring furnished for this project including manufacturer's name, address and factory location.
   2. Suppliers of private label flooring for this project must identify themselves as such and fully disclose the OEM information listed above.
   3. All "manufacturer" requirements in these specifications must be complied with by the OEM, including warranties, certifications, qualifications, product data, test results, environmental requirements, performance data, etc.
C. Samples:
   1. Submit for selection and approval three (3) sets of the indoor resilient multipurpose surfacing, manufacturer's brochures, samples or sample boards of all of the available colors, textures and styles.
   2. Submit color samples of all the available game line paint colors for selection and approval.
D. Closeout Submittals:
   1. Submit three (3) copies of the indoor resilient multipurpose surfacing and manufacturer's maintenance instructions.
   2. Submit three (3) copies of the material and installation warranties as specified.

1.3 *QUALITY ASSURANCE*

A. Qualifications:
   1. The indoor resilient multipurpose surfacing shall have been actively marketed for a minimum of ten (10) years.
   2. The indoor resilient multipurpose surfacing shall be manufactured in an ISO 9001 certified plant.
   3. The indoor resilient multipurpose surfacing shall be manufactured in an ISO 14001 certified plant.
   4. The indoor resilient multipurpose surfacing supplier shall be an established firm, experienced in the field, and competent in the techniques required by the manufacturer.
   5. The installer of the indoor resilient multipurpose surfacing shall have a minimum of five (5) years of experience in the field installing indoor resilient multipurpose surfacing and have worked on at least five (5) projects of similar size, type and complexity.

B. Certifications:
   1. Installer to submit the indoor resilient athletic surfacing manufacturer's or distributor's certification attesting that they are an approved installer of the indoor resilient multipurpose surfacing.
   2. The ind**o**or resilient multipurpose surfacing manufacturer to submit official ISO 9001 certification for the facility in which the indoor resilient multipurpose surfacing is manufactured.

C. Testing:
   Tests shall be relative for multi-purpose use with certificates from independent testing resources to be made available upon request. Test results shall be performed according to ASTM standard testing procedures including ASTM F2772 "Standard Specification for Athletic Performance Properties of Indoor Sports Floor Systems".

1.4 *DELIVERY, STORAGE AND HANDLING*

A. Delivery:
   Material shall not be delivered until all related work is in place and finished and/or proper storage facilities and conditions can be provided and guaranteed stable according to FieldTurf USA, Inc. recommendations.

B. Storage:
   1. Store the material in a secure, clean and dry location.
   2. Maintain temperature between 55° and 85° Fahrenheit.
   3. Store the indoor resilient athletic surfacing rolls in an upright position on a smooth flat surface immediately upon delivery to jobsite.
   4. Rolls shipped in rigid protective cardboard containers can be laid horizontally prior to unpacking and installation.

1.5 *PROJECT/SITE CONDITIONS*

A. It is the responsibility of the general contractor/construction manager to maintain project/site conditions acceptable for the installation of the indoor resilient multipurpose flooring.

B. The area in which the indoor resilient multipurpose surfacing will be installed shall be dry and weather tight. Permanent heat, light and ventilation shall be installed and operable.

C. All other trades shall have completed their work prior to the installation of the resilient athletic flooring. The general contractor or construction manager shall maintain a secure and clean working environment before, during and after the installation.

D. Maintain a stable room temperature of at least 65°F for a minimum of one (1) week prior to, during and thereafter installation.

E. An effective low-permeance vapor barrier is placed directly beneath the concrete subfloor. For "on" or "below grade" installations, it is recommended to provide a permanent vapor barrier resistant to long term hydrostatic pressure/moisture exposure. Protrusions should be sealed to prevent moisture migration into the slab. Moisture should not be allowed to enter the slab after the completed construction.

F. Concrete subfloor surface pH level within the 7 to 11 range dependent upon installation type.

G. Concrete subfloor should be no greater than 1/8" within a 10 ft diameter. This tolerance can be measured in accordance with ASTM E1155. A specified (F_F) of 50 and an (F_L) of 30 should reach this degree of floor flatness and floor level. There is no numerical correlation between F numbers and the deviation from the straight

edge. However, the above specified numbers should achieve a flat floor with minimal deviation in the slab. Reference ACI 117 and ACI 302.1R. The general contractor should provide a certificate of compliance with the above recommendations.

H. Concrete subfloor must be clean and free of all foreign materials or objects including, but not limited to, curing compounds and sealers.

I. Fill cracks, grooves, voids, depressions, and other minor imperfections. Follow the manufacturer's directions. Moveable joints must be treated utilizing specific transitioning joint devices depending upon the architect's recommendations. Follow current ASTM F710 guidelines for the preparation of concrete slabs to receive resilient flooring.

J. Refer to ACI 302.2R "Guidelines for Concrete Slabs that Receive Moisture-Sensitive Flooring Materials" for concrete design and construction.

K. Concrete slab shall be fortified with continual steel reinforcement. Fiber reinforcement alone shall not be considered adequate fortification.

1.6 *WARRANTY*

A. Special Limited Warranty:
   1. Manufacturer's standard form in which manufacturer agrees to repair or replace sports flooring including labor that fails within specified warranty period.

B. Material warranty must be direct from the product manufacturer.
   1. Material warranties must come from original manufacturer or division thereof. Private label warranties from distributors or brokers are not valid. Supply original point of manufacturing upon request.

C. Failures include, but are not limited to, the following:
   1. Material manufacturing defects.
   2. Surface wear and deterioration to the point of wear-through of wear layer per ASTM F410/ASTM F1303.
   3. Failure due to substrate moisture exposure exceeding 98 percent relative humidity when tested according to ASTM F2170.

D. Warranty Period:
   1. <u>For material defects and surface wear-through:</u> **25** years from date of substantial completion.
   2. <u>For moisture vapor tolerance:</u> **25** years from date of substantial completion.

E. Installer's Limited Warranty:
   1. Installer's standard form in which installer agrees to repair or replace sports flooring that fails due to poor workmanship or faulty installation within the specified warranty period.
   2. Warranty Period: 2 years from date of substantial completion.

1.7 *ADDITIONAL MATERIALS*

A. Furnish to the owner additional materials containing a total of at least 1% of each different color or design of the indoor resilient athletic surfacing used on the project.

1.8 *LEED™ CERTIFICATION*

A. The indoor resilient athletic surfacing should be able to help this facility to achieve points towards *LEED™ certification.* Flooring system must be certified by FloorScore.
B. LEED categories positively affected by the indoor resilient athletic surfacing:

LEED™ V4 Credit		Contribution
Materials & Resources: Building Product Disclosure & Optimization (BPDO)		
MRc3: Sourcing of Raw Materials	Options 1 & 2	2 Points
MRc4: Material Ingredients	Option 1	1 Point
MRc5: Construction and Demolition Management	Reclamation and Recycling	ReStart® Program
Indoor Environmental Quality		
EQc2: Low-Emitting Materials	TVOC: 0.5 mg/m3 or less	FloorScore®

PART 2 - PRODUCTS

2.1 *MANUFACTURERS*

A. The basis of the design for the indoor resilient multipurpose surfacing is Omnisports Active+ as manufactured by Tarkett.
B. All other installation accessories and related components must be either made or approved by the indoor resilient athletic surfacing manufacturer.
C. Other products may be approved as equal if deemed qualified and submitted in accordance with the General Conditions.
D. Test reports confirming compliance from an independent sports laboratory must be provided along with samples, technical data, installation, maintenance, and warranty prior to acceptance as an alternative product.

2.2 *MATERIALS*

A. Omnisports Active+ - Prefabricated sport surface 8.1 mm (0.14”) with wood flooring design, single surface embossing and Extreme Three (3) Layers technology (X3LT) as supplied by Tarkett.
   1. Embossing of wood design and solid colors must be the same; varying embossing or surface textures will not be allowed.
   2. Printing of wood design shall closely resemble standard wood strip flooring in size, color, board length, and grain appearance.
   3. Surface embossing combined with TopClean XP must offer proper balance of surface friction per the ASTM F2772.
   4. Surface embossing combined with TopClean XP must provide resistance to stains and scratches. Surface profile must not incorporate linear embossing.
   5. The wood design shall be protected by a clear layer of pure PVC (Polyvinyl Chloride) and TopClean XP, a factory-applied UV cured urethane treatment.
   6. Extreme Three (3) Layers technology (X3LT) includes Omnisports XCS cushion, glass veil and calendared sheet must offer improved shock absorbing comfort while providing better indentation recovery

7. The XCS cushion force reduction layer shall be high-density closed cell PVC foam with honeycomb embossing, and is applied in one continuous manufacturing process.
8. Laminated or adhered foam layers will not be allowed.
9. Field constructed products will not be accepted.

A. Physical properties of the indoor resilient athletic surfacing shall conform to the following minimums:

Width	—	6’ 6” (2 m)
Length	—	85’ (25.9m) approx.
Wear Layer	—	2 mm
Total Thickness	—	8.1 mm
Wear Layer	Type 1– Grade 1	ASTM F1303/F410
Vertical Deformation	PASSED	ASTM F2772
Rolling Load	PASSED	0.30 (EN 1569 {11/1999})
Surface Finish Effect	PASSED	ASTM F2772 (80 – 110)
Chemical Resistance	Excellent	ASTM F925
Impact Resistance	PASSED	EN 1717
Abrasion Resistance	PASSED	0.10 (EN ISO 5470-1 {06/1999})
Static Load Limit	PASSED	ASTM F970- Load 175 Lbs
Sound Insulation	Excellent	+/= 19 dB (ISO 717/2)
In-Room Sound Insulation	Excellent	61dB (NF S31-074)
Ball Rebound	PASSED	ASTM F2772 > 90%
Force Reduction	PASSED	ASTM F2772 Class 3
Fire Rating	PASSED	ASTM E648 Class 1
Microbial Assays Test	No Growth	G21 ASTM - Backing
Asthma and Allergy Friendly™	ASP: 05-01/101	Certified Compliant
Phthalate-free technology	—	YES
REACH Compliant	—	YES
Heavy Metals	—	NO
ISO 9001	—	YES
ISO 14001	—	YES

1. Color: As available from the indoor resilient athletic surfacing manufacturer’s standard range.
2. Hardwood Design Series: A wood look design as available from the indoor resilient athletic surfacing manufacturer’s standard range.
3. Texture: Texture to remain consistent between solid colors and wood design when blending colors.

C. Tarkolay – A high quality low permeance slip sheet vapor retarder designed to separate the installed system from the substrate below.
1. Tarkolay as manufactured by Tarkett can be used below, on, or above grade substrates that experience elevated moisture conditions.
2. Moisture tolerances shall have no limitation per ASTM F2170. Physical properties of the indoor resilient athletic surfacing shall conform to the following minimums:

Width	—	6’ 6” (2 m)
Length	—	147’7”’ (45 m) approx.
Total Thickness	—	1.3 mm
Dimensional Stability	PASSED	.01% (EN 1434)
Permeance	Excellent	<0.20 (ASTM E96

D. Welding Rod: As supplied by the indoor resilient athletic surfacing manufacturer or supplier.
   1. Color to blend with the indoor resilient athletic surfacing color or design.
   2. All seams shall be welded to create a monolithic and impermeable surface.
E. Adhesive: As approved by the indoor resilient athletic surfacing manufacturer.
F. Game Line Paint and Primer: As approved by the indoor resilient athletic surfacing manufacturer.

PART 3 - EXECUTION

3.1 *EXAMINATION*

A. It is the responsibility of the general contractor/construction manager to ensure that project/site conditions are acceptable for the installation of the indoor resilient athletic flooring.
B. Verify that the area in which the indoor resilient athletic surfacing will be installed is dry and weather tight. Verify that permanent heat, light and ventilation are installed and operable.
C. Verify that all other work that could cause damage, dirt and dust or interrupt the normal pace of the indoor resilient athletic flooring installation is completed or suspended.
D. Verify that there is a stable room temperature of at least 65°F.
E. Verify that there are no foreign materials or objects on the subfloor and that the subfloor is clean and ready for installation.
F. *Installation with Tarkolay to Concrete Subfloor : moisture content no limitation when tested per ASTM F2170.*
G. Follow Fieldturf USA, Inc. installation recommendations.
H. Do not average the results of the tests. Report all field test results in writing to the General Contractor, Architect, and End User prior to installation.
I. Verify that the concrete subfloor surface pH level is within the 7 - 11 range.
J. Document the results confirming the slab is within manufacturer's tolerances for slab deviation.

3.2 *PREPARATION OF SURFACES*

A. Sand the entire surface of the concrete slab.
B. Sweep the concrete slab so as to remove all dirt and dust. If a sweeping compound is to be used it must be a sweeping compound that does not contain oil or other items that may inhibit the adhesive bond.
C. Slab must be dust free. In the event that dust impairs adhesive bond, priming the slab prior to application of adhesive may be necessary. Follow installation guidelines.
D. Follow OSHA guidelines.

3.3 *INSTALLATION*

A. The installation area shall be closed to all traffic and activity for a period to be set by the indoor resilient athletic surfacing installer. The indoor resilient athletic surfacing installation shall not begin until the installer is familiar with the existing conditions.
B. All necessary precautions should be taken to minimize noise, smell, dust, the use of hazardous materials and any other items that may inconvenience others.
C. Install the indoor resilient athletic surfacing in strict accordance with the indoor resilient athletic surfacing manufacturer's written instructions.
D. Install the indoor resilient athletic surfacing minimizing cross seams. Provide a seam diagram during the submittal process for approval prior to installation. Vinyl Sheet Flooring Seams: Comply with ASTM F 1516. Rout joints and heat weld to permanently and seamlessly fuse sections together.
E. Paint game lines using approved game line paint primer and game line paint in strict accordance with the game line paint manufacturer's instructions.
F. Install appropriate threshold plates or transition strips where necessary.

3.5 *CLEANING*

A. Remove all unused materials, tools, and equipment and dispose of any debris properly. Clean the indoor resilient athletic surfacing in accordance with the manufacturer's instructions.

3.6 *PROTECTION*

A. If required, protect the indoor resilient athletic surfacing from damage using coverings approved by the manufacturer until acceptance of work by the customer or their authorized representative.

3.7 *RELATED STANDARDS AND GUIDELINES*

A. ASTM F2170 "Standard Test Method for Determining Relative Humidity In Concrete Floor Slabs Using In-Situ Probes"
B. ASTM F710 "Standard Practice for Preparing Concrete Floors to Receive Resilient Flooring"
C. ACI 302.2R-06 "Guideline for Concrete Slabs that Receive Moisture-Sensitive Flooring Materials"
D. ASTM F2772-11 "Standard Specification for Athletic Performance Properties of Indoor Sports Floor Systems"

END OF SECTION

SECTION 09 65 66
ARCHITECTURAL SPECIFICATIONS FOR INDOOR RESILIENT ATHLETIC SURFACING

PART 1 – GENERAL

1.1 *SECTION INCLUDES*

A. Supply and installation of the indoor resilient multipurpose surfacing
B. Application of the game lines
C. References for the correct construction and preparation of concrete slabs to receive resilient flooring.

1.2 *SUBMITTALS*

A. Product Data:
   1. Manufacturer's promotional brochures, specifications and installation instructions
B. Manufacturer Certifications:
   1. Provide certification that accurately identifies the Original Equipment Manufacturer (OEM) of flooring furnished for this project including manufacturer's name, address and factory location.
   2. Suppliers of private label flooring for this project must identify themselves as such and fully disclose the OEM information listed above.
   3. All "manufacturer" requirements in these specifications must be complied with by the OEM, including warranties, certifications, qualifications, product data, test results, environmental requirements, performance data, etc.
C. Samples:
   1. Submit for selection and approval three (3) sets of the indoor resilient multipurpose surfacing, manufacturer's brochures, samples or sample boards of all of the available colors, textures and styles.
   2. Submit color samples of all the available game line paint colors for selection and approval.
D. Closeout Submittals:
   1. Submit three (3) copies of the indoor resilient multipurpose surfacing and manufacturer's maintenance instructions.
   2. Submit three (3) copies of the material and installation warranties as specified.

1.3 *QUALITY ASSURANCE*

A. Qualifications:
   1. The indoor resilient multipurpose surfacing shall have been actively marketed for a minimum of ten (10) years.
   2. The indoor resilient multipurpose surfacing shall be manufactured in an ISO 9001 certified plant.
   3. The indoor resilient multipurpose surfacing shall be manufactured in an ISO 14001 certified plant.
   4. The indoor resilient multipurpose surfacing supplier shall be an established firm, experienced in the field, and competent in the techniques required by the manufacturer.
   5. The installer of the indoor resilient multipurpose surfacing shall have a minimum of five (5) years of experience in the field installing indoor resilient multipurpose surfacing and have worked on at least five (5) projects of similar size, type and complexity.

B. Certifications:
   1. Installer to submit the indoor resilient athletic surfacing manufacturer's certification attesting that they are a trained installer of the indoor resilient multipurpose surfacing.
   2. The indoor resilient multipurpose surfacing manufacturer to submit official ISO 9001 certification for the facility in which the indoor resilient multipurpose surfacing is manufactured.

C. Testing:
   1. Tests shall be relative for multi-purpose use with certificates from independent testing resources to be made available upon request.
   2. Test results shall be no more than 5 years old and performed according to ASTM standard testing procedures.

1.4 *DELIVERY, STORAGE AND HANDLING*

A. Delivery:
   Material shall not be delivered until all related work is in place and finished and/or proper storage facilities and conditions can be provided and guaranteed stable according to FieldTurf USA, Inc. recommendations.

B. Storage:
   1. Store the material in a secure, clean and dry location.
   2. Maintain temperature between 55° and 85° Fahrenheit.
   3. Store the indoor resilient athletic surfacing rolls in an upright position on a smooth flat surface immediately upon delivery to jobsite.
   4. Rolls shipped in rigid protective cardboard containers can be laid horizontally prior to unpacking and installation.

1.5 *PROJECT/SITE CONDITIONS*

A. It is the responsibility of the general contractor/construction manager to maintain project/site conditions acceptable for the installation of the indoor resilient multipurpose flooring.

B. The area in which the indoor resilient multipurpose surfacing will be installed shall be dry and weather tight. Permanent heat, light and ventilation shall be installed and operable.

C. All other trades shall have completed their work prior to the installation of the resilient athletic flooring. The general contractor or construction manager shall maintain a secure and clean working environment before, during and after the installation.

D. Maintain a stable room temperature of at least 65°F for a minimum of one (1) week prior to, during and thereafter installation.

E. An effective low-permeance vapor barrier is placed directly beneath the concrete subfloor. For "on" or "below grade" installations, it is recommended to provide a permanent vapor barrier resistant to long term hydrostatic pressure/moisture exposure. Protrusions should be sealed to prevent moisture migration into the slab. Moisture should not be allowed to enter the slab after the completed construction.

F. Concrete subfloor surface pH level within the 7 to 11 range dependent upon installation type.

G. Concrete subfloor should be no greater than 1/8" within a 10 ft diameter. This tolerance can be measured in accordance with ASTM E1155. A specified (F_F) of 50 and an (F_L) of 30 should reach this degree of floor flatness and floor level. There is no numerical correlation between F numbers and the deviation from the straight

edge. However, the above specified numbers should achieve a flat floor with minimal deviation in the slab. Reference ACI 117 and ACI 302.1R. The general contractor should provide a certificate of compliance with the above recommendations.

H. Concrete subfloor must be clean and free of all foreign materials or objects including, but not limited to, curing compounds and sealers.

I. Fill cracks, grooves, voids, depressions, and other minor imperfections. Follow the manufacturer's directions. Moveable joints must be treated utilizing specific transitioning joint devices depending upon the architect's recommendations. Follow current ASTM F710 guidelines for the preparation of concrete slabs to receive resilient flooring.

J. Refer to ACI 302.2R "Guidelines for Concrete Slabs that Receive Moisture-Sensitive Flooring Materials" for concrete design and construction.

K. Concrete slab shall be fortified with continual steel reinforcement. Fiber reinforcement alone shall not be considered adequate fortification.

1.6 *WARRANTY*

A. Special Limited Warranty:
   1. Manufacturer's standard form in which manufacturer agrees to repair or replace sports flooring including labor that fails within specified warranty period.

B. Material warranty must be direct from the product manufacturer.
   1. Material warranties from separate or third party insurance providers are not valid.
   2. Material warranties must come from original manufacturer or division thereof. Private label warranties from distributors or brokers are not valid. Supply original point of manufacturing upon request.

C. Failures include, but are not limited to, the following:
   1. Material manufacturing defects.
   2. Surface wear and deterioration to the point of wear-through of wear layer per ASTM F410/ASTM F1303.
   3. Failure due to substrate moisture exposure exceeding 80 percent relative humidity when tested according to ASTM F2170.

D. Warranty Period:
   1. <u>For material defects and surface wear-through:</u> **15** years from date of substantial completion.
   2. <u>For moisture vapor tolerance:</u> **10** years from date of substantial completion.

E. Installer's Limited Warranty:
   1. Installer's standard form in which installer agrees to repair or replace sports flooring that fails due to poor workmanship or faulty installation within the specified warranty period.
   2. Warranty Period: 2 years from date of substantial completion.

1.7 *ADDITIONAL MATERIALS*

A. Furnish to the owner additional materials containing a total of at least 1% of each different color or design of the indoor resilient athletic surfacing used on the project.

1.8 *LEED™ CERTIFICATION*

A. The indoor resilient athletic surfacing should be able to help this facility to achieve points towards *LEED™ certification.* Flooring system must be certified by FloorScore.
B. LEED categories positively affected by the indoor resilient athletic surfacing:

LEED™ V4 Credit		Contribution
Materials & Resources: Building Product Disclosure & Optimization (BPDO)		
MRc3: Sourcing of Raw Materials	Options 1 & 2	2 Points
MRc4: Material Ingredients	Option 1	1 Point
MRc5: Construction and Demolition Management	Reclamation and Recycling	ReStart® Program
Indoor Environmental Quality		
EQc2: Low-Emitting Materials	TVOC: 0.5 mg/m3 or less	FloorScore®

PART 2 - PRODUCTS

2.1 *MANUFACTURERS*

A. The basis of the design for the indoor resilient multipurpose surfacing is Omnisports 2.0 mm and Lumaflex Elite system as manufactured by Tarkett.
B. All other installation accessories and related components must be either made or approved by the indoor resilient athletic surfacing manufacturer.
C. Other products may be approved as equal if deemed qualified and submitted in accordance with the General Conditions.
D. Test reports confirming compliance from an independent sports laboratory must be provided along with samples, technical data, installation, maintenance, and warranty prior to acceptance as an alternative product.

2.2 *MATERIALS*

A. Omnisports 2.0 mm - Prefabricated sport surface 2.0 mm (0.08″) with wood flooring design and slightly textured embossed surface as supplied by Tarkett.
   1. Embossing of wood design and solid colors must be the same; varying embossing or surface textures will not be allowed.
   2. Printing of wood design shall closely resemble standard wood strip flooring in size, color, board length, and grain appearance.
   3. The wood design shall be protected by a clear layer of pure PVC (Polyvinyl Chloride) and TopClean xp, a factory-applied UV cured urethane treatment.
   4. Intermediate layers shall be fortified with a non-woven fiberglass grid for increased dimensional stability.
   5. The Lumaflex Elite System shall incorporate Lumaflex Elite double tongue and grooved multi-ply engineered panels, force reduction cushion, and appropriate vapor retarder.

B. Physical properties of the indoor resilient athletic surfacing shall conform to the following minimums:

Width	—	6′ 6″ (2 m)
Length	—	85′ (25.9m) approx.
Wear Layer	—	2 mm
Total Thickness	—	2.0 mm
Total Combined Thickness		1 ¼″ (33 mm approx.)
Wear Layer	Type 1– Grade 1	ASTM F1303/F410
Rolling Load	PASSED	0.30 (EN 1569 {11/1999})
Force Reduction	PASSED	ASTM F2772 Class 5
Surface Finish Effect	PASSED	ASTM F2772 (80 – 110)
Vertical Deformation	PASSED	ASTM F2772
Ball Rebound	PASSED	ASTM F2772 > 90%
Chemical Resistance	Excellent	ASTM F925
Impact Resistance	PASSED	EN 1717
Abrasion Resistance	PASSED	0.10 (EN ISO 5470-1 {06/1999})
Static Load Limit	PASSED	ASTM F970- Load 175 Lbs
Phthalate-free technology	—	YES
REACH Compliant	—	YES
Heavy Metals	—	NO
ISO 9001	—	YES
ISO 14001	—	YES

1. Color: As available from the indoor resilient athletic surfacing manufacturer's standard range.
2. Hardwood Design Series: A wood look design as available from the indoor resilient athletic surfacing manufacturer's standard range.
3. Texture: Texture to remain consistent between solid colors and wood design when blending colors.

C. Welding Rod: As supplied by the indoor resilient athletic surfacing manufacturer or supplier.
   1. Color to blend with the indoor resilient athletic surfacing color or design.
   2. All seams shall be welded to create a monolithic and impermeable surface.

D. Adhesive: As approved by the indoor resilient athletic surfacing manufacturer.

E. Game Line Paint and Primer: As approved by the indoor resilient athletic surfacing manufacturer.

PART 3 - EXECUTION

3.1 *EXAMINATION*

A. It is the responsibility of the general contractor/construction manager to ensure that project/site conditions are acceptable for the installation of the indoor resilient athletic flooring.
B. Verify that the area in which the indoor resilient athletic surfacing will be installed is dry and weather tight. Verify that permanent heat, light and ventilation are installed and operable.
C. Verify that all other work that could cause damage, dirt and dust or interrupt the normal pace of the indoor resilient athletic flooring installation is completed or suspended.
D. Verify that there is a stable room temperature of at least 65◦F.
E. Verify that there are no foreign materials or objects on the subfloor and that the subfloor is clean and ready for installation.
F. *Concrete Subfloor: moisture content less than 85% RH when tested per ASTM F2170.*
G. Follow Fieldturf USA, Inc. installation recommendations.
H. Do not average the results of the tests. Report all field test results in writing to the General Contractor, Architect, and End User prior to installation.
I. Verify that the concrete subfloor surface pH level is within the 7 - 11 range.
J. Document the results confirming the slab is within manufacturer's tolerances for slab deviation.

3.2 *PREPARATION OF SURFACES*

A. Sand the entire surface of the concrete slab.
B. Sweep the concrete slab so as to remove all dirt and dust. If a sweeping compound is to be used it must be a sweeping compound that does not contain oil or other items that may inhibit the adhesive bond.
C. Slab must be dust free. In the event that dust impairs adhesive bond, priming the slab prior to application of adhesive may be necessary. Follow installation guidelines.
D. Follow OSHA guidelines.

3.3 *INSTALLATION*

A. The installation area shall be closed to all traffic and activity for a period to be set by the indoor resilient athletic surfacing installer. The indoor resilient athletic surfacing installation shall not begin until the installer is familiar with the existing conditions.
B. All necessary precautions should be taken to minimize noise, smell, dust, the use of hazardous materials and any other items that may inconvenience others.
C. Install the indoor resilient athletic surfacing in strict accordance with the indoor resilient athletic surfacing manufacturer's written instructions.
D. Install the indoor resilient athletic surfacing minimizing cross seams. Provide a seam diagram during the submittal process for approval prior to installation. Vinyl Sheet Flooring Seams: Comply with ASTM F 1516. Rout joints and heat weld to permanently and seamlessly fuse sections together.
E. Paint game lines using approved game line paint primer and game line paint in strict accordance with the game line paint manufacturer's instructions.
F. Install appropriate threshold plates or transition strips where necessary.

2.0 *CLEANING*

A. Remove all unused materials, tools, and equipment and dispose of any debris properly. Clean the indoor resilient athletic surfacing in accordance with the manufacturer's instructions.

3.6 *PROTECTION*

A. If required, protect the indoor resilient athletic surfacing from damage using coverings approved by the manufacturer until acceptance of work by the customer or their authorized representative.

3.7 *RELATED STANDARDS AND GUIDELINES*

A. ASTM F2170 "Standard Test Method for Determining Relative Humidity In Concrete Floor Slabs Using In-Situ Probes"
B. ASTM F710 "Standard Practice for Preparing Concrete Floors to Receive Resilient Flooring"
C. ACI 302.2R-06 "Guideline for Concrete Slabs that Receive Moisture-Sensitive Flooring Materials"
D. ASTM F2772-11 "Standard Specification for Athletic Performance Properties of Indoor Sports Floor Systems"

END OF SECTION

SECTION 09 65 66
ARCHITECTURAL SPECIFICATIONS FOR INDOOR RESILIENT ATHLETIC SURFACING

PART 1 – GENERAL

1.1 *SECTION INCLUDES*

A. Supply and installation of the indoor resilient multipurpose surfacing
B. Application of the game lines
C. References for the correct construction and preparation of concrete slabs to receive resilient flooring.

1.2 *SUBMITTALS*

A. Product Data:
   1. Manufacturer's promotional brochures, specifications and installation instructions
B. Manufacturer Certifications:
   1. Provide certification that accurately identifies the Original Equipment Manufacturer (OEM) of flooring furnished for this project including manufacturer's name, address and factory location.
   2. Suppliers of private label flooring for this project must identify themselves as such and fully disclose the OEM information listed above.
   3. All "manufacturer" requirements in these specifications must be complied with by the OEM, including warranties, certifications, qualifications, product data, test results, environmental requirements, performance data, etc.
C. Samples:
   1. Submit for selection and approval three (3) sets of the indoor resilient multipurpose surfacing, manufacturer's brochures, samples or sample boards of all of the available colors, textures and styles.
   2. Submit color samples of all the available game line paint colors for selection and approval.
D. Closeout Submittals:
   1. Submit three (3) copies of the indoor resilient multipurpose surfacing and manufacturer's maintenance instructions.
   2. Submit three (3) copies of the material and installation warranties as specified.

1.3 *QUALITY ASSURANCE*

A. Qualifications:
   1. The indoor resilient multipurpose surfacing shall have been actively marketed for a minimum of ten (10) years.
   2. The indoor resilient multipurpose surfacing shall be manufactured in an ISO 9001 certified plant.
   3. The indoor resilient multipurpose surfacing shall be manufactured in an ISO 14001 certified plant.
   4. The indoor resilient multipurpose surfacing supplier shall be an established firm, experienced in the field, and competent in the techniques required by the manufacturer.
   5. The installer of the indoor resilient multipurpose surfacing shall have a minimum of five (5) years of experience in the field installing indoor resilient multipurpose surfacing and have worked on at least five (5) projects of similar size, type and complexity.

B. Certifications:
   1. Installer to submit the indoor resilient athletic surfacing manufacturer's certification attesting that they are a trained installer of the indoor resilient multipurpose surfacing.
   2. The indoor resilient multipurpose surfacing manufacturer to submit official ISO 9001 certification for the facility in which the indoor resilient multipurpose surfacing is manufactured.

C. Testing:
   1. Tests shall be relative for multi-purpose use with certificates from independent testing resources to be made available upon request.
   2. Test results shall be no more than 5 years old and performed according to ASTM standard testing procedures.

1.4 *DELIVERY, STORAGE AND HANDLING*

A. Delivery:
   Material shall not be delivered until all related work is in place and finished and/or proper storage facilities and conditions can be provided and guaranteed stable according to FieldTurf USA, Inc. recommendations.

B. Storage:
   1. Store the material in a secure, clean and dry location.
   2. Maintain temperature between 55° and 85° Fahrenheit.
   3. Store the indoor resilient athletic surfacing rolls in an upright position on a smooth flat surface immediately upon delivery to jobsite.
   4. Rolls shipped in rigid protective cardboard containers can be laid horizontally prior to unpacking and installation.

1.5 *PROJECT/SITE CONDITIONS*

A. It is the responsibility of the general contractor/construction manager to maintain project/site conditions acceptable for the installation of the indoor resilient multipurpose flooring.

B. The area in which the indoor resilient multipurpose surfacing will be installed shall be dry and weather tight. Permanent heat, light and ventilation shall be installed and operable.

C. All other trades shall have completed their work prior to the installation of the resilient athletic flooring. The general contractor or construction manager shall maintain a secure and clean working environment before, during and after the installation.

D. Maintain a stable room temperature of at least 65°F for a minimum of one (1) week prior to, during and thereafter installation.

E. An effective low-permeance vapor barrier is placed directly beneath the concrete subfloor. For "on" or "below grade" installations, it is recommended to provide a permanent vapor barrier resistant to long term hydrostatic pressure/moisture exposure. Protrusions should be sealed to prevent moisture migration into the slab. Moisture should not be allowed to enter the slab after the completed construction.

F. Concrete subfloor surface pH level within the 7 to 11 range dependent upon installation type.

G. Concrete subfloor should be no greater than 1/8" within a 10 ft diameter. This tolerance can be measured in accordance with ASTM E1155. A specified (F_F) of 50 and an (F_L) of 30 should reach this degree of floor flatness and floor level. There is no numerical correlation between F numbers and the deviation from the straight

edge. However, the above specified numbers should achieve a flat floor with minimal deviation in the slab. Reference ACI 117 and ACI 302.1R. The general contractor should provide a certificate of compliance with the above recommendations.

H. Concrete subfloor must be clean and free of all foreign materials or objects including, but not limited to, curing compounds and sealers.

I. Fill cracks, grooves, voids, depressions, and other minor imperfections. Follow the manufacturer's directions. Moveable joints must be treated utilizing specific transitioning joint devices depending upon the architect's recommendations. Follow current ASTM F710 guidelines for the preparation of concrete slabs to receive resilient flooring.

J. Refer to ACI 302.2R "Guidelines for Concrete Slabs that Receive Moisture-Sensitive Flooring Materials" for concrete design and construction.

K. Concrete slab shall be fortified with continual steel reinforcement. Fiber reinforcement alone shall not be considered adequate fortification.

1.6 *WARRANTY*

A. Special Limited Warranty:
   1. Manufacturer's standard form in which manufacturer agrees to repair or replace sports flooring including labor that fails within specified warranty period.

B. Material warranty must be direct from the product manufacturer.
   1. Material warranties from separate or third party insurance providers are not valid.
   2. Material warranties must come from original manufacturer or division thereof. Private label warranties from distributors or brokers are not valid. Supply original point of manufacturing upon request.

C. Failures include, but are not limited to, the following:
   1. Material manufacturing defects.
   2. Surface wear and deterioration to the point of wear-through of wear layer per ASTM F410/ASTM F1303.
   3. Failure due to substrate moisture exposure exceeding 80 percent relative humidity when tested according to ASTM F2170.

D. Warranty Period:
   1. <u>For material defects and surface wear-through:</u> **15** years from date of substantial completion.
   2. <u>For moisture vapor tolerance:</u> **10** years from date of substantial completion.

E. Installer's Limited Warranty:
   1. Installer's standard form in which installer agrees to repair or replace sports flooring that fails due to poor workmanship or faulty installation within the specified warranty period.
   2. Warranty Period: 2 years from date of substantial completion.

1.7 *ADDITIONAL MATERIALS*

A. Furnish to the owner additional materials containing a total of at least 1% of each different color or design of the indoor resilient athletic surfacing used on the project.

1.8 *LEED™ CERTIFICATION*

A. The indoor resilient athletic surfacing should be able to help this facility to achieve points towards *LEED™ certification.* Flooring system must be certified by FloorScore.
B. LEED categories positively affected by the indoor resilient athletic surfacing:

LEED™ V4 Credit		Contribution
Materials & Resources: Building Product Disclosure & Optimization (BPDO)		
MRc3: Sourcing of Raw Materials	Options 1 & 2	2 Points
MRc4: Material Ingredients	Option 1	1 Point
MRc5: Construction and Demolition Management	Reclamation and Recycling	ReStart® Program
Indoor Environmental Quality		
EQc2: Low-Emitting Materials	TVOC: 0.5 mg/m3 or less	FloorScore®

PART 2 - PRODUCTS

2.1 *MANUFACTURERS*

A. The basis of the design for the indoor resilient multipurpose surfacing is Omnisports 2.0 mm and Lumaflex Fit system as manufactured by Tarkett.
B. All other installation accessories and related components must be either made or approved by the indoor resilient athletic surfacing manufacturer.
C. Other products may be approved as equal if deemed qualified and submitted in accordance with the General Conditions.
D. Test reports confirming compliance from an independent sports laboratory must be provided along with samples, technical data, installation, maintenance, and warranty prior to acceptance as an alternative product.

2.2 *MATERIALS*

A. Omnisports 2.0 mm - Prefabricated sport surface 2.0 mm (0.08″) with wood flooring design and slightly textured embossed surface as supplied by Tarkett.
   1. Embossing of wood design and solid colors must be the same; varying embossing or surface textures will not be allowed.
   2. Printing of wood design shall closely resemble standard wood strip flooring in size, color, board length, and grain appearance.
   3. The wood design shall be protected by a clear layer of pure PVC (Polyvinyl Chloride) and TopClean xp, a factory-applied UV cured urethane treatment.
   4. Intermediate layers shall be fortified with a non-woven fiberglass grid for increased dimensional stability.
   5. The Lumaflex Fit System shall incorporate Lumaflex Fit double tongue and grooved multi-ply engineered panels, force reduction cushion, and appropriate vapor retarder.

B. Physical properties of the indoor resilient athletic surfacing shall conform to the following minimums:

Width	—	6′ 6″ (2 m)
Length	—	85′ (25.9m) approx.
Wear Layer	—	2 mm
Total Thickness	—	2.0 mm
Total Combined Thickness		1 7/8″ (46 mm approx.)
Wear Layer	Type 1– Grade 1	ASTM F1303/F410
Rolling Load	PASSED	0.30 (EN 1569 {11/1999})
Force Reduction	PASSED	ASTM F2772 Class 5
Surface Finish Effect	PASSED	ASTM F2772 (80 – 110)
Vertical Deformation	PASSED	ASTM F2772
Ball Rebound	PASSED	ASTM F2772 > 90%
Chemical Resistance	Excellent	ASTM F925
Impact Resistance	PASSED	EN 1717
Abrasion Resistance	PASSED	0.10 (EN ISO 5470-1 {06/1999})
Static Load Limit	PASSED	ASTM F970- Load 175 Lbs
Phthalate-free technology	—	YES
REACH Compliant	—	YES
Heavy Metals	—	NO
ISO 9001	—	YES
ISO 14001	—	YES

1. Color: As available from the indoor resilient athletic surfacing manufacturer's standard range.
2. Hardwood Design Series: A wood look design as available from the indoor resilient athletic surfacing manufacturer's standard range.
3. Texture: Texture to remain consistent between solid colors and wood design when blending colors.

C. Welding Rod: As supplied by the indoor resilient athletic surfacing manufacturer or supplier.
   1. Color to blend with the indoor resilient athletic surfacing color or design.
   2. All seams shall be welded to create a monolithic and impermeable surface.

D. Adhesive: As approved by the indoor resilient athletic surfacing manufacturer.

E. Game Line Paint and Primer: As approved by the indoor resilient athletic surfacing manufacturer.

PART 3 - EXECUTION

3.1 *EXAMINATION*

A. It is the responsibility of the general contractor/construction manager to ensure that project/site conditions are acceptable for the installation of the indoor resilient athletic flooring.
B. Verify that the area in which the indoor resilient athletic surfacing will be installed is dry and weather tight. Verify that permanent heat, light and ventilation are installed and operable.
C. Verify that all other work that could cause damage, dirt and dust or interrupt the normal pace of the indoor resilient athletic flooring installation is completed or suspended.
D. Verify that there is a stable room temperature of at least 65◦F.
E. Verify that there are no foreign materials or objects on the subfloor and that the subfloor is clean and ready for installation.
F. *Concrete Subfloor: moisture content less than 85% RH when tested per ASTM F2170.*
G. Follow Fieldturf USA, Inc. installation recommendations.
H. Do not average the results of the tests. Report all field test results in writing to the General Contractor, Architect, and End User prior to installation.
I. Verify that the concrete subfloor surface pH level is within the 7 - 11 range.
J. Document the results confirming the slab is within manufacturer's tolerances for slab deviation.

3.2 *PREPARATION OF SURFACES*

A. Sand the entire surface of the concrete slab.
B. Sweep the concrete slab so as to remove all dirt and dust. If a sweeping compound is to be used it must be a sweeping compound that does not contain oil or other items that may inhibit the adhesive bond.
C. Slab must be dust free. In the event that dust impairs adhesive bond, priming the slab prior to application of adhesive may be necessary. Follow installation guidelines.
D. Follow OSHA guidelines.

3.3 *INSTALLATION*

A. The installation area shall be closed to all traffic and activity for a period to be set by the indoor resilient athletic surfacing installer. The indoor resilient athletic surfacing installation shall not begin until the installer is familiar with the existing conditions.
B. All necessary precautions should be taken to minimize noise, smell, dust, the use of hazardous materials and any other items that may inconvenience others.
C. Install the indoor resilient athletic surfacing in strict accordance with the indoor resilient athletic surfacing manufacturer's written instructions.
D. Install the indoor resilient athletic surfacing minimizing cross seams. Provide a seam diagram during the submittal process for approval prior to installation. Vinyl Sheet Flooring Seams: Comply with ASTM F 1516. Rout joints and heat weld to permanently and seamlessly fuse sections together.
E. Paint game lines using approved game line paint primer and game line paint in strict accordance with the game line paint manufacturer's instructions.
F. Install appropriate threshold plates or transition strips where necessary.

2.0 *CLEANING*

A. Remove all unused materials, tools, and equipment and dispose of any debris properly. Clean the indoor resilient athletic surfacing in accordance with the manufacturer's instructions.

3.6 *PROTECTION*

A. If required, protect the indoor resilient athletic surfacing from damage using coverings approved by the manufacturer until acceptance of work by the customer or their authorized representative.

3.7 *RELATED STANDARDS AND GUIDELINES*

A. ASTM F2170 "Standard Test Method for Determining Relative Humidity In Concrete Floor Slabs Using In-Situ Probes"
B. ASTM F710 "Standard Practice for Preparing Concrete Floors to Receive Resilient Flooring"
C. ACI 302.2R-06 "Guideline for Concrete Slabs that Receive Moisture-Sensitive Flooring Materials"
D. ASTM F2772-11 "Standard Specification for Athletic Performance Properties of Indoor Sports Floor Systems"

END OF SECTION

SECTION 09 65 66
ARCHITECTURAL SPECIFICATIONS FOR INDOOR RESILIENT ATHLETIC SURFACING

PART 1 – GENERAL

1.1 *SECTION INCLUDES*

A. Supply and installation of the indoor resilient multipurpose surfacing
B. Application of the game lines
C. References for the correct construction and preparation of concrete slabs to receive resilient flooring.

1.2 *SUBMITTALS*

A. Product Data:
   1. Manufacturer's promotional brochures, specifications and installation instructions
B. Manufacturer Certifications:
   1. Provide certification that accurately identifies the Original Equipment Manufacturer (OEM) of flooring furnished for this project including manufacturer's name, address and factory location.
   2. Suppliers of private label flooring for this project must identify themselves as such and fully disclose the OEM information listed above.
   3. All "manufacturer" requirements in these specifications must be complied with by the OEM, including warranties, certifications, qualifications, product data, test results, environmental requirements, performance data, etc.
C. Samples:
   1. Submit for selection and approval three (3) sets of the indoor resilient multipurpose surfacing, manufacturer's brochures, samples or sample boards of all of the available colors, textures and styles.
   2. Submit color samples of all the available game line paint colors for selection and approval.
D. Closeout Submittals:
   1. Submit three (3) copies of the indoor resilient multipurpose surfacing and manufacturer's maintenance instructions.
   2. Submit three (3) copies of the material and installation warranties as specified.

1.3 *QUALITY ASSURANCE*

A. Qualifications:
   1. The indoor resilient multipurpose surfacing shall have been actively marketed for a minimum of ten (10) years.
   2. The indoor resilient multipurpose surfacing shall be manufactured in an ISO 9001 certified plant.
   3. The indoor resilient multipurpose surfacing shall be manufactured in an ISO 14001 certified plant.
   4. The indoor resilient multipurpose surfacing supplier shall be an established firm, experienced in the field, and competent in the techniques required by the manufacturer.
   5. The installer of the indoor resilient multipurpose surfacing shall have a minimum of five (5) years of experience in the field installing indoor resilient multipurpose surfacing and have worked on at least five (5) projects of similar size, type and complexity.

B. Certifications:
   1. Installer to submit the indoor resilient athletic surfacing manufacturer's certification attesting that they are a trained installer of the indoor resilient multipurpose surfacing.
   2. The indoor resilient multipurpose surfacing manufacturer to submit official ISO 9001 certification for the facility in which the indoor resilient multipurpose surfacing is manufactured.

C. Testing:
   1. Tests shall be relative for multi-purpose use with certificates from independent testing resources to be made available upon request.
   2. Test results shall be no more than 5 years old and performed according to ASTM standard testing procedures.

1.4 *DELIVERY, STORAGE AND HANDLING*

A. Delivery:
   Material shall not be delivered until all related work is in place and finished and/or proper storage facilities and conditions can be provided and guaranteed stable according to FieldTurf USA, Inc. recommendations.

B. Storage:
   1. Store the material in a secure, clean and dry location.
   2. Maintain temperature between 55° and 85° Fahrenheit.
   3. Store the indoor resilient athletic surfacing rolls in an upright position on a smooth flat surface immediately upon delivery to jobsite.
   4. Rolls shipped in rigid protective cardboard containers can be laid horizontally prior to unpacking and installation.

1.5 *PROJECT/SITE CONDITIONS*

A. It is the responsibility of the general contractor/construction manager to maintain project/site conditions acceptable for the installation of the indoor resilient multipurpose flooring.

B. The area in which the indoor resilient multipurpose surfacing will be installed shall be dry and weather tight. Permanent heat, light and ventilation shall be installed and operable.

C. All other trades shall have completed their work prior to the installation of the resilient athletic flooring. The general contractor or construction manager shall maintain a secure and clean working environment before, during and after the installation.

D. Maintain a stable room temperature of at least 65°F for a minimum of one (1) week prior to, during and thereafter installation.

E. An effective low-permeance vapor barrier is placed directly beneath the concrete subfloor. For "on" or "below grade" installations, it is recommended to provide a permanent vapor barrier resistant to long term hydrostatic pressure/moisture exposure. Protrusions should be sealed to prevent moisture migration into the slab. Moisture should not be allowed to enter the slab after the completed construction.

F. Concrete subfloor surface pH level within the 7 to 11 range dependent upon installation type.

G. Concrete subfloor should be no greater than 1/8" within a 10 ft diameter. This tolerance can be measured in accordance with ASTM E1155. A specified (F_F) of 50 and an (F_L) of 30 should reach this degree of floor flatness and floor level. There is no numerical correlation between F numbers and the deviation from the straight

edge. However, the above specified numbers should achieve a flat floor with minimal deviation in the slab. Reference ACI 117 and ACI 302.1R. The general contractor should provide a certificate of compliance with the above recommendations.

H. Concrete subfloor must be clean and free of all foreign materials or objects including, but not limited to, curing compounds and sealers.

I. Fill cracks, grooves, voids, depressions, and other minor imperfections. Follow the manufacturer's directions. Moveable joints must be treated utilizing specific transitioning joint devices depending upon the architect's recommendations. Follow current ASTM F710 guidelines for the preparation of concrete slabs to receive resilient flooring.

J. Refer to ACI 302.2R "Guidelines for Concrete Slabs that Receive Moisture-Sensitive Flooring Materials" for concrete design and construction.

K. Concrete slab shall be fortified with continual steel reinforcement. Fiber reinforcement alone shall not be considered adequate fortification.

1.6 *WARRANTY*

A. Special Limited Warranty:
   1. Manufacturer's standard form in which manufacturer agrees to repair or replace sports flooring including labor that fails within specified warranty period.

B. Material warranty must be direct from the product manufacturer.
   1. Material warranties from separate or third party insurance providers are not valid.
   2. Material warranties must come from original manufacturer or division thereof. Private label warranties from distributors or brokers are not valid. Supply original point of manufacturing upon request.

C. Failures include, but are not limited to, the following:
   1. Material manufacturing defects.
   2. Surface wear and deterioration to the point of wear-through of wear layer per ASTM F410/ASTM F1303.
   3. Failure due to substrate moisture exposure exceeding 80 percent relative humidity when tested according to ASTM F2170.

D. Warranty Period:
   1. <u>For material defects and surface wear-through:</u> **15** years from date of substantial completion.
   2. <u>For moisture vapor tolerance:</u> **10** years from date of substantial completion.

E. Installer's Limited Warranty:
   1. Installer's standard form in which installer agrees to repair or replace sports flooring that fails due to poor workmanship or faulty installation within the specified warranty period.
   2. Warranty Period: 2 years from date of substantial completion.

1.7 *ADDITIONAL MATERIALS*

A. Furnish to the owner additional materials containing a total of at least 1% of each different color or design of the indoor resilient athletic surfacing used on the project.

1.8 *LEED™ CERTIFICATION*

A. The indoor resilient athletic surfacing should be able to help this facility to achieve points towards *LEED™ certification.* Flooring system must be certified by FloorScore.
B. LEED categories positively affected by the indoor resilient athletic surfacing:

LEED™ V4 Credit		Contribution
Materials & Resources: Building Product Disclosure & Optimization (BPDO)		
MRc3: Sourcing of Raw Materials	Options 1 & 2	2 Points
MRc4: Material Ingredients	Option 1	1 Point
MRc5: Construction and Demolition Management	Reclamation and Recycling	ReStart® Program
Indoor Environmental Quality		
EQc2: Low-Emitting Materials	TVOC: 0.5 mg/m3 or less	FloorScore®

PART 2 - PRODUCTS

2.1 *MANUFACTURERS*

A. The basis of the design for the indoor resilient multipurpose surfacing is Omnisports 2.0 mm and Lumaflex system as manufactured by Tarkett.
B. All other installation accessories and related components must be either made or approved by the indoor resilient athletic surfacing manufacturer.
C. Other products may be approved as equal if deemed qualified and submitted in accordance with the General Conditions.
D. Test reports confirming compliance from an independent sports laboratory must be provided along with samples, technical data, installation, maintenance, and warranty prior to acceptance as an alternative product.

2.2 *MATERIALS*

A. Omnisports 2.0 mm - Prefabricated sport surface 2.0 mm (0.08″) with wood flooring design and slightly textured embossed surface as supplied by Tarkett.
   1. Embossing of wood design and solid colors must be the same; varying embossing or surface textures will not be allowed.
   2. Printing of wood design shall closely resemble standard wood strip flooring in size, color, board length, and grain appearance.
   3. The wood design shall be protected by a clear layer of pure PVC (Polyvinyl Chloride) and TopClean xp, a factory-applied UV cured urethane treatment.
   4. Intermediate layers shall be fortified with a non-woven fiberglass grid for increased dimensional stability.
   5. The Lumaflex System shall incorporate Lumaflex double tongue and grooved multi-ply engineered panels, force reduction cushion, and appropriate vapor retarder.

B. Physical properties of the indoor resilient athletic surfacing shall conform to the following minimums:

Width	—	6′ 6″ (2 m)
Length	—	85′ (25.9m) approx.
Wear Layer	—	2 mm
Total Thickness	—	2.0 mm
Total Combined Thickness		1 ¼″ (33 mm approx.)
Wear Layer	Type 1– Grade 1	ASTM F1303/F410
Rolling Load	PASSED	0.30 (EN 1569 {11/1999})
Force Reduction	PASSED	ASTM F2772 Class 4
Surface Finish Effect	PASSED	ASTM F2772 (80 – 110)
Vertical Deformation	PASSED	ASTM F2772
Ball Rebound	PASSED	ASTM F2772 > 90%
Chemical Resistance	Excellent	ASTM F925
Impact Resistance	PASSED	EN 1717
Abrasion Resistance	PASSED	0.10 (EN ISO 5470-1 {06/1999})
Static Load Limit	PASSED	ASTM F970- Load 175 Lbs
Fire Rating	PASSED	ASTM E648 Class 1
Phthalate-free technology	—	YES
Lumaflex Foam		GreenGuard Certified
REACH Compliant	—	YES
Heavy Metals	—	NO
ISO 9001	—	YES
ISO 14001	—	YES

1. Color: As available from the indoor resilient athletic surfacing manufacturer's standard range.
2. Hardwood Design Series: A wood look design as available from the indoor resilient athletic surfacing manufacturer's standard range.
3. Texture: Texture to remain consistent between solid colors and wood design when blending colors.

C. Welding Rod: As supplied by the indoor resilient athletic surfacing manufacturer or supplier.
   1. Color to blend with the indoor resilient athletic surfacing color or design.
   2. All seams shall be welded to create a monolithic and impermeable surface.

D. Adhesive: As approved by the indoor resilient athletic surfacing manufacturer.

E. Game Line Paint and Primer: As approved by the indoor resilient athletic surfacing manufacturer.

PART 3 - EXECUTION

3.1 *EXAMINATION*

A. It is the responsibility of the general contractor/construction manager to ensure that project/site conditions are acceptable for the installation of the indoor resilient athletic flooring.
B. Verify that the area in which the indoor resilient athletic surfacing will be installed is dry and weather tight. Verify that permanent heat, light and ventilation are installed and operable.
C. Verify that all other work that could cause damage, dirt and dust or interrupt the normal pace of the indoor resilient athletic flooring installation is completed or suspended.
D. Verify that there is a stable room temperature of at least 65◦F.
E. Verify that there are no foreign materials or objects on the subfloor and that the subfloor is clean and ready for installation.
F. *Concrete Subfloor: moisture content less than 85% RH when tested per ASTM F2170.*
G. Follow Fieldturf USA, Inc. installation recommendations.
H. Do not average the results of the tests. Report all field test results in writing to the General Contractor, Architect, and End User prior to installation.
I. Verify that the concrete subfloor surface pH level is within the 7 - 11 range.
J. Document the results confirming the slab is within manufacturer's tolerances for slab deviation.

3.2 *PREPARATION OF SURFACES*

A. Sand the entire surface of the concrete slab.
B. Sweep the concrete slab so as to remove all dirt and dust. If a sweeping compound is to be used it must be a sweeping compound that does not contain oil or other items that may inhibit the adhesive bond.
C. Slab must be dust free. In the event that dust impairs adhesive bond, priming the slab prior to application of adhesive may be necessary. Follow installation guidelines.
D. Follow OSHA guidelines.

3.3 *INSTALLATION*

A. The installation area shall be closed to all traffic and activity for a period to be set by the indoor resilient athletic surfacing installer. The indoor resilient athletic surfacing installation shall not begin until the installer is familiar with the existing conditions.
B. All necessary precautions should be taken to minimize noise, smell, dust, the use of hazardous materials and any other items that may inconvenience others.
C. Install the indoor resilient athletic surfacing in strict accordance with the indoor resilient athletic surfacing manufacturer's written instructions.
D. Install the indoor resilient athletic surfacing minimizing cross seams. Provide a seam diagram during the submittal process for approval prior to installation. Vinyl Sheet Flooring Seams: Comply with ASTM F 1516. Rout joints and heat weld to permanently and seamlessly fuse sections together.
E. Paint game lines using approved game line paint primer and game line paint in strict accordance with the game line paint manufacturer's instructions.
F. Install appropriate threshold plates or transition strips where necessary.

2.0 *CLEANING*

A. Remove all unused materials, tools, and equipment and dispose of any debris properly. Clean the indoor resilient athletic surfacing in accordance with the manufacturer's instructions.

3.6 *PROTECTION*

A. If required, protect the indoor resilient athletic surfacing from damage using coverings approved by the manufacturer until acceptance of work by the customer or their authorized representative.

3.7 *RELATED STANDARDS AND GUIDELINES*

A. ASTM F2170 "Standard Test Method for Determining Relative Humidity In Concrete Floor Slabs Using In-Situ Probes"
B. ASTM F710 "Standard Practice for Preparing Concrete Floors to Receive Resilient Flooring"
C. ACI 302.2R-06 "Guideline for Concrete Slabs that Receive Moisture-Sensitive Flooring Materials"
D. ASTM F2772-11 "Standard Specification for Athletic Performance Properties of Indoor Sports Floor Systems"

END OF SECTION

SECTION 09 65 66
ARCHITECTURAL SPECIFICATIONS FOR INDOOR RESILIENT ATHLETIC SURFACING

PART 1 – GENERAL

1.1 *SECTION INCLUDES*

A. Supply and installation of the indoor resilient multipurpose surfacing
B. Application of the game lines
C. References for the correct construction and preparation of concrete slabs to receive resilient flooring.

1.2 *SUBMITTALS*

A. Product Data:
   1. Manufacturer's promotional brochures, specifications and installation instructions
B. Manufacturer Certifications:
   1. Provide certification that accurately identifies the Original Equipment Manufacturer (OEM) of flooring furnished for this project including manufacturer's name, address and factory location.
   2. Suppliers of private label flooring for this project must identify themselves as such and fully disclose the OEM information listed above.
   3. All "manufacturer" requirements in these specifications must be complied with by the OEM, including warranties, certifications, qualifications, product data, test results, environmental requirements, performance data, etc.
C. Samples:
   1. Submit for selection and approval three (3) sets of the indoor resilient multipurpose surfacing, manufacturer's brochures, samples or sample boards of all of the available colors, textures and styles.
   2. Submit color samples of all the available game line paint colors for selection and approval.
D. Closeout Submittals:
   1. Submit three (3) copies of the indoor resilient multipurpose surfacing and manufacturer's maintenance instructions.
   2. Submit three (3) copies of the material and installation warranties as specified.

1.3 *QUALITY ASSURANCE*

A. Qualifications:
   1. The indoor resilient multipurpose surfacing shall have been actively marketed for a minimum of ten (10) years.
   2. The indoor resilient multipurpose surfacing shall be manufactured in an ISO 9001 certified plant.
   3. The indoor resilient multipurpose surfacing shall be manufactured in an ISO 14001 certified plant.
   4. The indoor resilient multipurpose surfacing supplier shall be an established firm, experienced in the field, and competent in the techniques required by the manufacturer.
   5. The installer of the indoor resilient multipurpose surfacing shall have a minimum of five (5) years of experience in the field installing indoor resilient multipurpose surfacing and have worked on at least five (5) projects of similar size, type and complexity.

B. Certifications:
   1. Installer to submit the indoor resilient athletic surfacing manufacturer's or distributor's certification attesting that they are an approved installer of the indoor resilient multipurpose surfacing.
   2. The ind**o**or resilient multipurpose surfacing manufacturer to submit official ISO 9001 certification for the facility in which the indoor resilient multipurpose surfacing is manufactured.

C. Testing:
   Tests shall be relative for multi-purpose use with certificates from independent testing resources to be made available upon request. Test results shall be performed according to ASTM standard testing procedures including ASTM F2772 "Standard Specification for Athletic Performance Properties of Indoor Sports Floor Systems".

1.4 *DELIVERY, STORAGE AND HANDLING*

A. Delivery:
   Material shall not be delivered until all related work is in place and finished and/or proper storage facilities and conditions can be provided and guaranteed stable according to FieldTurf USA, Inc. recommendations.

B. Storage:
   1. Store the material in a secure, clean and dry location.
   2. Maintain temperature between 55° and 85° Fahrenheit.
   3. Store the indoor resilient athletic surfacing rolls in an upright position on a smooth flat surface immediately upon delivery to jobsite.
   4. Rolls shipped in rigid protective cardboard containers can be laid horizontally prior to unpacking and installation.

1.5 *PROJECT/SITE CONDITIONS*

A. It is the responsibility of the general contractor/construction manager to maintain project/site conditions acceptable for the installation of the indoor resilient multipurpose flooring.

B. The area in which the indoor resilient multipurpose surfacing will be installed shall be dry and weather tight. Permanent heat, light and ventilation shall be installed and operable.

C. All other trades shall have completed their work prior to the installation of the resilient athletic flooring. The general contractor or construction manager shall maintain a secure and clean working environment before, during and after the installation.

D. Maintain a stable room temperature of at least 65°F for a minimum of one (1) week prior to, during and thereafter installation.

E. An effective low-permeance vapor barrier is placed directly beneath the concrete subfloor. For "on" or "below grade" installations, it is recommended to provide a permanent vapor barrier resistant to long term hydrostatic pressure/moisture exposure. Protrusions should be sealed to prevent moisture migration into the slab. Moisture should not be allowed to enter the slab after the completed construction.

F. Concrete subfloor surface pH level within the 7 to 11 range dependent upon installation type.

G. Concrete subfloor should be no greater than 1/8" within a 10 ft diameter. This tolerance can be measured in accordance with ASTM E1155. A specified (F_F) of 50 and an (F_L) of 30 should reach this degree of floor flatness and floor level. There is no numerical correlation between F numbers and the deviation from the straight

edge. However, the above specified numbers should achieve a flat floor with minimal deviation in the slab. Reference ACI 117 and ACI 302.1R. The general contractor should provide a certificate of compliance with the above recommendations.

H. Concrete subfloor must be clean and free of all foreign materials or objects including, but not limited to, curing compounds and sealers.

I. Fill cracks, grooves, voids, depressions, and other minor imperfections. Follow the manufacturer's directions. Moveable joints must be treated utilizing specific transitioning joint devices depending upon the architect's recommendations. Follow current ASTM F710 guidelines for the preparation of concrete slabs to receive resilient flooring.

J. Refer to ACI 302.2R "Guidelines for Concrete Slabs that Receive Moisture-Sensitive Flooring Materials" for concrete design and construction.

K. Concrete slab shall be fortified with continual steel reinforcement. Fiber reinforcement alone shall not be considered adequate fortification.

1.6 *WARRANTY*

A. Special Limited Warranty:
   1. Manufacturer's standard form in which manufacturer agrees to repair or replace sports flooring including labor that fails within specified warranty period.

B. Material warranty must be direct from the product manufacturer.
   1. Material warranties must come from original manufacturer or division thereof. Private label warranties from distributors or brokers are not valid. Supply original point of manufacturing upon request.

C. Failures include, but are not limited to, the following:
   1. Material manufacturing defects.
   2. Surface wear and deterioration to the point of wear-through of wear layer per ASTM F410/ASTM F1303.
   3. Failure due to substrate moisture exposure exceeding 98 percent relative humidity when tested according to ASTM F2170.

D. Warranty Period:
   1. For material defects and surface wear-through: **25** years from date of substantial completion.
   2. For moisture vapor tolerance: **25** years from date of substantial completion.

E. Installer's Limited Warranty:
   1. Installer's standard form in which installer agrees to repair or replace sports flooring that fails due to poor workmanship or faulty installation within the specified warranty period.
   2. Warranty Period: 2 years from date of substantial completion.

1.7 *ADDITIONAL MATERIALS*

A. Furnish to the owner additional materials containing a total of at least 1% of each different color or design of the indoor resilient athletic surfacing used on the project.

1.8 *LEED™ CERTIFICATION*

A. The indoor resilient athletic surfacing should be able to help this facility to achieve points towards *LEED™ certification.* Flooring system must be certified by FloorScore.
B. LEED categories positively affected by the indoor resilient athletic surfacing:

LEED™ V4 Credit		Contribution
Materials & Resources: Building Product Disclosure & Optimization (BPDO)		
MRc3: Sourcing of Raw Materials	Options 1 & 2	2 Points
MRc4: Material Ingredients	Option 1	1 Point
MRc5: Construction and Demolition Management	Reclamation and Recycling	ReStart® Program
Indoor Environmental Quality		
EQc2: Low-Emitting Materials	TVOC: 0.5 mg/m3 or less	FloorScore®

PART 2 - PRODUCTS

2.1 *MANUFACTURERS*

A. The basis of the design for the indoor resilient multipurpose surfacing is Omnisports Extreme as manufactured by Tarkett.
B. All other installation accessories and related components must be either made or approved by the indoor resilient athletic surfacing manufacturer.
C. Other products may be approved as equal if deemed qualified and submitted in accordance with the General Conditions.
D. Test reports confirming compliance from an independent sports laboratory must be provided along with samples, technical data, installation, maintenance, and warranty prior to acceptance as an alternative product.

2.2 *MATERIALS*

A. Omnisports Extreme - Prefabricated sport surface 12 mm (0.47”) with wood flooring design and slightly textured embossed surface as supplied by Tarkett.
   1. Embossing of wood design and solid colors must be the same; varying embossing or surface textures will not be allowed.
   2. Printing of wood design shall closely resemble standard wood strip flooring in size, color, board length, and grain appearance.
   3. The wood design shall be protected by a clear layer of pure PVC (Polyvinyl Chloride) and TopClean xp, a factory-applied UV cured urethane treatment.
   4. Intermediate layers shall be fortified with a non-woven fiberglass grid for increased dimensional stability.
   5. The foam force reduction layer shall be high-density closed cell PVC foam with honeycomb embossing, and is applied in one continuous manufacturing process.
   6. Laminated or adhered foam layers will not be allowed.
   7. Field constructed products will not be accepted.

A. Physical properties of the indoor resilient athletic surfacing shall conform to the following minimums:

Width	—	6’ 6” (2 m)
Length	—	49.2' (15m) approx.
Wear Layer	—	2 mm
Total Thickness	—	12 mm
Wear Layer	Type 1– Grade 1	ASTM F1303/F410
Vertical Deformation	PASSED	ASTM F2772
Rolling Load	PASSED	0.30 (EN 1569 {11/1999})
Surface Finish Effect	PASSED	ASTM F2772 (80 – 110)
Chemical Resistance	Excellent	ASTM F925
Impact Resistance	PASSED	EN 1717
Abrasion Resistance	PASSED	0.10 (EN ISO 5470-1 {06/1999})
Static Load Limit	PASSED	ASTM F970- Load 175 Lbs
Sound Insulation	Excellent	+/= 21 dB (ISO 717/2)
In-Room Sound Insulation	Excellent	61dB (NF S31-074)
Ball Rebound	PASSED	ASTM F2772 > 90%
Force Reduction	PASSED	ASTM F2772 Class 4
Fire Rating	PASSED	ASTM E648 Class 1
Microbial Assays Test	No Growth	G21 ASTM - Backing
Phthalate-free technology	—	YES
REACH Compliant	—	YES
Heavy Metals	—	NO
ISO 9001	—	YES
ISO 14001	—	YES

1. Color: As available from the indoor resilient athletic surfacing manufacturer’s standard range.
2. Hardwood Design Series: High definition printing for a realistic wood surface appearance as available from the indoor resilient athletic surfacing manufacturer’s standard range.
3. Texture: Texture to remain consistent between solid colors and wood design when blending colors.

C. Welding Rod: As supplied by the indoor resilient athletic surfacing manufacturer or supplier.
   1. Color to blend with the indoor resilient athletic surfacing color or design.
   2. All seams shall be welded to create a monolithic and impermeable surface.

D. Adhesive: As approved by the indoor resilient athletic surfacing manufacturer.

E. Game Line Paint and Primer: As approved by the indoor resilient athletic surfacing manufacturer.

PART 3 - EXECUTION

3.1 *EXAMINATION*

A. It is the responsibility of the general contractor/construction manager to ensure that project/site conditions are acceptable for the installation of the indoor resilient athletic flooring.
B. Verify that the area in which the indoor resilient athletic surfacing will be installed is dry and weather tight. Verify that permanent heat, light and ventilation are installed and operable.
C. Verify that all other work that could cause damage, dirt and dust or interrupt the normal pace of the indoor resilient athletic flooring installation is completed or suspended.
D. Verify that there is a stable room temperature of at least 65◦F.
E. Verify that there are no foreign materials or objects on the subfloor and that the subfloor is clean and ready for installation.
F. *Direct Full Spread Adhering to Concrete Subfloor HS Sports Spray : moisture content less than 90% RH when tested per ASTM F2170.*
G. Follow Fieldturf USA, Inc. installation recommendations.
H. Do not average the results of the tests. Report all field test results in writing to the General Contractor, Architect, and End User prior to installation.
I. Verify that the concrete subfloor surface pH level is within the 7 - 11 range.
J. Document the results confirming the slab is within manufacturer's tolerances for slab deviation.

3.2 *PREPARATION OF SURFACES*

A. Sand the entire surface of the concrete slab.
B. Sweep the concrete slab so as to remove all dirt and dust. If a sweeping compound is to be used it must be a sweeping compound that does not contain oil or other items that may inhibit the adhesive bond.
C. Slab must be dust free. In the event that dust impairs adhesive bond, priming the slab prior to application of adhesive may be necessary. Follow installation guidelines.
D. Follow OSHA guidelines.

3.3 *INSTALLATION*

A. The installation area shall be closed to all traffic and activity for a period to be set by the indoor resilient athletic surfacing installer. The indoor resilient athletic surfacing installation shall not begin until the installer is familiar with the existing conditions.
B. All necessary precautions should be taken to minimize noise, smell, dust, the use of hazardous materials and any other items that may inconvenience others.
C. Install the indoor resilient athletic surfacing in strict accordance with the indoor resilient athletic surfacing manufacturer's written instructions.
D. Install the indoor resilient athletic surfacing minimizing cross seams. Provide a seam diagram during the submittal process for approval prior to installation. Vinyl Sheet Flooring Seams: Comply with ASTM F 1516. Rout joints and heat weld to permanently and seamlessly fuse sections together.
E. Paint game lines using approved game line paint primer and game line paint in strict accordance with the game line paint manufacturer's instructions.
F. Install appropriate threshold plates or transition strips where necessary.

3.5 *CLEANING*

A. Remove all unused materials, tools, and equipment and dispose of any debris properly. Clean the indoor resilient athletic surfacing in accordance with the manufacturer's instructions.

3.6 *PROTECTION*

A. If required, protect the indoor resilient athletic surfacing from damage using coverings approved by the manufacturer until acceptance of work by the customer or their authorized representative.

3.7 *RELATED STANDARDS AND GUIDELINES*

A. ASTM F2170 "Standard Test Method for Determining Relative Humidity In Concrete Floor Slabs Using In-Situ Probes"
B. ASTM F710 "Standard Practice for Preparing Concrete Floors to Receive Resilient Flooring"
C. ACI 302.2R-06 "Guideline for Concrete Slabs that Receive Moisture-Sensitive Flooring Materials"
D. ASTM F2772-11 "Standard Specification for Athletic Performance Properties of Indoor Sports Floor Systems"

END OF SECTION

SECTION 09 65 66
ARCHITECTURAL SPECIFICATIONS FOR INDOOR RESILIENT ATHLETIC SURFACING

PART 1 – GENERAL

1.1 *SECTION INCLUDES*

A. Supply and installation of the indoor resilient multipurpose surfacing
B. Application of the game lines
C. References for the correct construction and preparation of concrete slabs to receive resilient flooring.

1.2 *SUBMITTALS*

A. Product Data:
   1. Manufacturer's promotional brochures, specifications and installation instructions
B. Manufacturer Certifications:
   1. Provide certification that accurately identifies the Original Equipment Manufacturer (OEM) of flooring furnished for this project including manufacturer's name, address and factory location.
   2. Suppliers of private label flooring for this project must identify themselves as such and fully disclose the OEM information listed above.
   3. All "manufacturer" requirements in these specifications must be complied with by the OEM, including warranties, certifications, qualifications, product data, test results, environmental requirements, performance data, etc.
C. Samples:
   1. Submit for selection and approval three (3) sets of the indoor resilient multipurpose surfacing, manufacturer's brochures, samples or sample boards of all of the available colors, textures and styles.
   2. Submit color samples of all the available game line paint colors for selection and approval.
D. Closeout Submittals:
   1. Submit three (3) copies of the indoor resilient multipurpose surfacing and manufacturer's maintenance instructions.
   2. Submit three (3) copies of the material and installation warranties as specified.

1.3 *QUALITY ASSURANCE*

A. Qualifications:
   1. The indoor resilient multipurpose surfacing shall have been actively marketed for a minimum of ten (10) years.
   2. The indoor resilient multipurpose surfacing shall be manufactured in an ISO 9001 certified plant.
   3. The indoor resilient multipurpose surfacing shall be manufactured in an ISO 14001 certified plant.
   4. The indoor resilient multipurpose surfacing supplier shall be an established firm, experienced in the field, and competent in the techniques required by the manufacturer.
   5. The installer of the indoor resilient multipurpose surfacing shall have a minimum of five (5) years of experience in the field installing indoor resilient multipurpose surfacing and have worked on at least five (5) projects of similar size, type and complexity.

B. Certifications:
   1. Installer to submit the indoor resilient athletic surfacing manufacturer's or distributor's certification attesting that they are an approved installer of the indoor resilient multipurpose surfacing.
   2. The ind**o**or resilient multipurpose surfacing manufacturer to submit official ISO 9001 certification for the facility in which the indoor resilient multipurpose surfacing is manufactured.

C. Testing:
   Tests shall be relative for multi-purpose use with certificates from independent testing resources to be made available upon request. Test results shall be performed according to ASTM standard testing procedures including ASTM F2772 "Standard Specification for Athletic Performance Properties of Indoor Sports Floor Systems".

1.4 *DELIVERY, STORAGE AND HANDLING*

A. Delivery:
   Material shall not be delivered until all related work is in place and finished and/or proper storage facilities and conditions can be provided and guaranteed stable according to FieldTurf USA, Inc. recommendations.

B. Storage:
   1. Store the material in a secure, clean and dry location.
   2. Maintain temperature between 55° and 85° Fahrenheit.
   3. Store the indoor resilient athletic surfacing rolls in an upright position on a smooth flat surface immediately upon delivery to jobsite.
   4. Rolls shipped in rigid protective cardboard containers can be laid horizontally prior to unpacking and installation.

1.5 *PROJECT/SITE CONDITIONS*

A. It is the responsibility of the general contractor/construction manager to maintain project/site conditions acceptable for the installation of the indoor resilient multipurpose flooring.

B. The area in which the indoor resilient multipurpose surfacing will be installed shall be dry and weather tight. Permanent heat, light and ventilation shall be installed and operable.

C. All other trades shall have completed their work prior to the installation of the resilient athletic flooring. The general contractor or construction manager shall maintain a secure and clean working environment before, during and after the installation.

D. Maintain a stable room temperature of at least 65°F for a minimum of one (1) week prior to, during and thereafter installation.

E. An effective low-permeance vapor barrier is placed directly beneath the concrete subfloor. For "on" or "below grade" installations, it is recommended to provide a permanent vapor barrier resistant to long term hydrostatic pressure/moisture exposure. Protrusions should be sealed to prevent moisture migration into the slab. Moisture should not be allowed to enter the slab after the completed construction.

F. Concrete subfloor surface pH level within the 7 to 11 range dependent upon installation type.

G. Concrete subfloor should be no greater than 1/8" within a 10 ft diameter. This tolerance can be measured in accordance with ASTM E1155. A specified (F_F) of 50 and an (F_L) of 30 should reach this degree of floor flatness and floor level. There is no numerical correlation between F numbers and the deviation from the straight

edge. However, the above specified numbers should achieve a flat floor with minimal deviation in the slab. Reference ACI 117 and ACI 302.1R. The general contractor should provide a certificate of compliance with the above recommendations.

H. Concrete subfloor must be clean and free of all foreign materials or objects including, but not limited to, curing compounds and sealers.

I. Fill cracks, grooves, voids, depressions, and other minor imperfections. Follow the manufacturer's directions. Moveable joints must be treated utilizing specific transitioning joint devices depending upon the architect's recommendations. Follow current ASTM F710 guidelines for the preparation of concrete slabs to receive resilient flooring.

J. Refer to ACI 302.2R "Guidelines for Concrete Slabs that Receive Moisture-Sensitive Flooring Materials" for concrete design and construction.

K. Concrete slab shall be fortified with continual steel reinforcement. Fiber reinforcement alone shall not be considered adequate fortification.

1.6 *WARRANTY*

A. Special Limited Warranty:
   1. Manufacturer's standard form in which manufacturer agrees to repair or replace sports flooring including labor that fails within specified warranty period.

B. Material warranty must be direct from the product manufacturer.
   1. Material warranties must come from original manufacturer or division thereof. Private label warranties from distributors or brokers are not valid. Supply original point of manufacturing upon request.

C. Failures include, but are not limited to, the following:
   1. Material manufacturing defects.
   2. Surface wear and deterioration to the point of wear-through of wear layer per ASTM F410/ASTM F1303.
   3. Failure due to substrate moisture exposure exceeding 98 percent relative humidity when tested according to ASTM F2170.

D. Warranty Period:
   1. For material defects and surface wear-through: **25** years from date of substantial completion.
   2. For moisture vapor tolerance: **25** years from date of substantial completion.

E. Installer's Limited Warranty:
   1. Installer's standard form in which installer agrees to repair or replace sports flooring that fails due to poor workmanship or faulty installation within the specified warranty period.
   2. Warranty Period: 2 years from date of substantial completion.

1.7 *ADDITIONAL MATERIALS*

A. Furnish to the owner additional materials containing a total of at least 1% of each different color or design of the indoor resilient athletic surfacing used on the project.

1.8 *LEED™ CERTIFICATION*

A. The indoor resilient athletic surfacing should be able to help this facility to achieve points towards *LEED™ certification.* Flooring system must be certified by FloorScore.
B. LEED categories positively affected by the indoor resilient athletic surfacing:

LEED™ V4 Credit		Contribution
Materials & Resources: Building Product Disclosure & Optimization (BPDO)		
MRc3: Sourcing of Raw Materials	Options 1 & 2	2 Points
MRc4: Material Ingredients	Option 1	1 Point
MRc5: Construction and Demolition Management	Reclamation and Recycling	ReStart® Program
Indoor Environmental Quality		
EQc2: Low-Emitting Materials	TVOC: 0.5 mg/m3 or less	FloorScore®

PART 2 - PRODUCTS

2.1 *MANUFACTURERS*

A. The basis of the design for the indoor resilient multipurpose surfacing is Omnisports Extreme as manufactured by Tarkett.
B. All other installation accessories and related components must be either made or approved by the indoor resilient athletic surfacing manufacturer.
C. Other products may be approved as equal if deemed qualified and submitted in accordance with the General Conditions.
D. Test reports confirming compliance from an independent sports laboratory must be provided along with samples, technical data, installation, maintenance, and warranty prior to acceptance as an alternative product.

2.2 *MATERIALS*

A. Omnisports Extreme - Prefabricated sport surface 12 mm (0.47”) with wood flooring design and slightly textured embossed surface as supplied by Tarkett.
   1. Embossing of wood design and solid colors must be the same; varying embossing or surface textures will not be allowed.
   2. Printing of wood design shall closely resemble standard wood strip flooring in size, color, board length, and grain appearance.
   3. The wood design shall be protected by a clear layer of pure PVC (Polyvinyl Chloride) and TopClean xp, a factory-applied UV cured urethane treatment.
   4. Intermediate layers shall be fortified with a non-woven fiberglass grid for increased dimensional stability.
   5. The foam force reduction layer shall be high-density closed cell PVC foam with honeycomb embossing, and is applied in one continuous manufacturing process.
   6. Laminated or adhered foam layers will not be allowed.
   7. Field constructed products will not be accepted.

A. Physical properties of the indoor resilient athletic surfacing shall conform to the following minimums:

Width	—	6’ 6” (2 m)
Length	—	49.2' (15m) approx.
Wear Layer	—	2 mm
Total Thickness	—	12 mm
Wear Layer	Type 1– Grade 1	ASTM F1303/F410
Vertical Deformation	PASSED	ASTM F2772
Rolling Load	PASSED	0.30 (EN 1569 {11/1999})
Surface Finish Effect	PASSED	ASTM F2772 (80 – 110)
Chemical Resistance	Excellent	ASTM F925
Impact Resistance	PASSED	EN 1717
Abrasion Resistance	PASSED	0.10 (EN ISO 5470-1 {06/1999})
Static Load Limit	PASSED	ASTM F970- Load 175 Lbs
Sound Insulation	Excellent	+/= 21 dB (ISO 717/2)
In-Room Sound Insulation	Excellent	61dB (NF S31-074)
Ball Rebound	PASSED	ASTM F2772 > 90%
Force Reduction	PASSED	ASTM F2772 Class 4
Fire Rating	PASSED	ASTM E648 Class 1
Microbial Assays Test	No Growth	G21 ASTM - Backing
Phthalate-free technology	—	YES
REACH Compliant	—	YES
Heavy Metals	—	NO
ISO 9001	—	YES
ISO 14001	—	YES

1. Color: As available from the indoor resilient athletic surfacing manufacturer’s standard range.
2. Hardwood Design Series: High definition printing for a realistic wood surface appearance as available from the indoor resilient athletic surfacing manufacturer’s standard range.
3. Texture: Texture to remain consistent between solid colors and wood design when blending colors.

C. Welding Rod: As supplied by the indoor resilient athletic surfacing manufacturer or supplier.
   1. Color to blend with the indoor resilient athletic surfacing color or design.
   2. All seams shall be welded to create a monolithic and impermeable surface.

D. Adhesive: As approved by the indoor resilient athletic surfacing manufacturer.

E. Game Line Paint and Primer: As approved by the indoor resilient athletic surfacing manufacturer.

PART 3 - EXECUTION

3.1 *EXAMINATION*

A. It is the responsibility of the general contractor/construction manager to ensure that project/site conditions are acceptable for the installation of the indoor resilient athletic flooring.
B. Verify that the area in which the indoor resilient athletic surfacing will be installed is dry and weather tight. Verify that permanent heat, light and ventilation are installed and operable.
C. Verify that all other work that could cause damage, dirt and dust or interrupt the normal pace of the indoor resilient athletic flooring installation is completed or suspended.
D. Verify that there is a stable room temperature of at least 65◦F.
E. Verify that there are no foreign materials or objects on the subfloor and that the subfloor is clean and ready for installation.
F. *Direct Full Spread Adhering to Concrete Subfloor Multi-Poxy : moisture content less than 98% RH when tested per ASTM F2170.*
G. Follow Fieldturf USA, Inc. installation recommendations.
H. Do not average the results of the tests. Report all field test results in writing to the General Contractor, Architect, and End User prior to installation.
I. Verify that the concrete subfloor surface pH level is within the 7 - 11 range.
J. Document the results confirming the slab is within manufacturer's tolerances for slab deviation.

3.2 *PREPARATION OF SURFACES*

A. Sand the entire surface of the concrete slab.
B. Sweep the concrete slab so as to remove all dirt and dust. If a sweeping compound is to be used it must be a sweeping compound that does not contain oil or other items that may inhibit the adhesive bond.
C. Slab must be dust free. In the event that dust impairs adhesive bond, priming the slab prior to application of adhesive may be necessary. Follow installation guidelines.
D. Follow OSHA guidelines.

3.3 *INSTALLATION*

A. The installation area shall be closed to all traffic and activity for a period to be set by the indoor resilient athletic surfacing installer. The indoor resilient athletic surfacing installation shall not begin until the installer is familiar with the existing conditions.
B. All necessary precautions should be taken to minimize noise, smell, dust, the use of hazardous materials and any other items that may inconvenience others.
C. Install the indoor resilient athletic surfacing in strict accordance with the indoor resilient athletic surfacing manufacturer's written instructions.
D. Install the indoor resilient athletic surfacing minimizing cross seams. Provide a seam diagram during the submittal process for approval prior to installation. Vinyl Sheet Flooring Seams: Comply with ASTM F 1516. Rout joints and heat weld to permanently and seamlessly fuse sections together.
E. Paint game lines using approved game line paint primer and game line paint in strict accordance with the game line paint manufacturer's instructions.
F. Install appropriate threshold plates or transition strips where necessary.

3.5 *CLEANING*

A. Remove all unused materials, tools, and equipment and dispose of any debris properly. Clean the indoor resilient athletic surfacing in accordance with the manufacturer's instructions.

3.6 *PROTECTION*

A. If required, protect the indoor resilient athletic surfacing from damage using coverings approved by the manufacturer until acceptance of work by the customer or their authorized representative.

3.7 *RELATED STANDARDS AND GUIDELINES*

A. ASTM F2170 "Standard Test Method for Determining Relative Humidity In Concrete Floor Slabs Using In-Situ Probes"
B. ASTM F710 "Standard Practice for Preparing Concrete Floors to Receive Resilient Flooring"
C. ACI 302.2R-06 "Guideline for Concrete Slabs that Receive Moisture-Sensitive Flooring Materials"
D. ASTM F2772-11 "Standard Specification for Athletic Performance Properties of Indoor Sports Floor Systems"

END OF SECTION

SECTION 09 65 66
ARCHITECTURAL SPECIFICATIONS FOR INDOOR RESILIENT ATHLETIC SURFACING

PART 1 – GENERAL

1.1 *SECTION INCLUDES*

A. Supply and installation of the indoor resilient multipurpose surfacing
B. Application of the game lines
C. References for the correct construction and preparation of concrete slabs to receive resilient flooring.

1.2 *SUBMITTALS*

A. Product Data:
   1. Manufacturer's promotional brochures, specifications and installation instructions
B. Manufacturer Certifications:
   1. Provide certification that accurately identifies the Original Equipment Manufacturer (OEM) of flooring furnished for this project including manufacturer's name, address and factory location.
   2. Suppliers of private label flooring for this project must identify themselves as such and fully disclose the OEM information listed above.
   3. All "manufacturer" requirements in these specifications must be complied with by the OEM, including warranties, certifications, qualifications, product data, test results, environmental requirements, performance data, etc.
C. Samples:
   1. Submit for selection and approval three (3) sets of the indoor resilient multipurpose surfacing, manufacturer's brochures, samples or sample boards of all of the available colors, textures and styles.
   2. Submit color samples of all the available game line paint colors for selection and approval.
D. Closeout Submittals:
   1. Submit three (3) copies of the indoor resilient multipurpose surfacing and manufacturer's maintenance instructions.
   2. Submit three (3) copies of the material and installation warranties as specified.

1.3 *QUALITY ASSURANCE*

A. Qualifications:
   1. The indoor resilient multipurpose surfacing shall have been actively marketed for a minimum of ten (10) years.
   2. The indoor resilient multipurpose surfacing shall be manufactured in an ISO 9001 certified plant.
   3. The indoor resilient multipurpose surfacing shall be manufactured in an ISO 14001 certified plant.
   4. The indoor resilient multipurpose surfacing supplier shall be an established firm, experienced in the field, and competent in the techniques required by the manufacturer.
   5. The installer of the indoor resilient multipurpose surfacing shall have a minimum of five (5) years of experience in the field installing indoor resilient multipurpose surfacing and have worked on at least five (5) projects of similar size, type and complexity.

B. Certifications:
   1. Installer to submit the indoor resilient athletic surfacing manufacturer's or distributor's certification attesting that they are an approved installer of the indoor resilient multipurpose surfacing.
   2. The ind**o**or resilient multipurpose surfacing manufacturer to submit official ISO 9001 certification for the facility in which the indoor resilient multipurpose surfacing is manufactured.

C. Testing:
   Tests shall be relative for multi-purpose use with certificates from independent testing resources to be made available upon request. Test results shall be performed according to ASTM standard testing procedures including ASTM F2772 "Standard Specification for Athletic Performance Properties of Indoor Sports Floor Systems".

1.4 *DELIVERY, STORAGE AND HANDLING*

A. Delivery:
   Material shall not be delivered until all related work is in place and finished and/or proper storage facilities and conditions can be provided and guaranteed stable according to FieldTurf USA, Inc. recommendations.

B. Storage:
   1. Store the material in a secure, clean and dry location.
   2. Maintain temperature between 55° and 85° Fahrenheit.
   3. Store the indoor resilient athletic surfacing rolls in an upright position on a smooth flat surface immediately upon delivery to jobsite.
   4. Rolls shipped in rigid protective cardboard containers can be laid horizontally prior to unpacking and installation.

1.5 *PROJECT/SITE CONDITIONS*

A. It is the responsibility of the general contractor/construction manager to maintain project/site conditions acceptable for the installation of the indoor resilient multipurpose flooring.

B. The area in which the indoor resilient multipurpose surfacing will be installed shall be dry and weather tight. Permanent heat, light and ventilation shall be installed and operable.

C. All other trades shall have completed their work prior to the installation of the resilient athletic flooring. The general contractor or construction manager shall maintain a secure and clean working environment before, during and after the installation.

D. Maintain a stable room temperature of at least 65°F for a minimum of one (1) week prior to, during and thereafter installation.

E. An effective low-permeance vapor barrier is placed directly beneath the concrete subfloor. For "on" or "below grade" installations, it is recommended to provide a permanent vapor barrier resistant to long term hydrostatic pressure/moisture exposure. Protrusions should be sealed to prevent moisture migration into the slab. Moisture should not be allowed to enter the slab after the completed construction.

F. Concrete subfloor surface pH level within the 7 to 11 range dependent upon installation type.

G. Concrete subfloor should be no greater than 1/8" within a 10 ft diameter. This tolerance can be measured in accordance with ASTM E1155. A specified (F_F) of 50 and an (F_L) of 30 should reach this degree of floor flatness and floor level. There is no numerical correlation between F numbers and the deviation from the straight

edge. However, the above specified numbers should achieve a flat floor with minimal deviation in the slab. Reference ACI 117 and ACI 302.1R. The general contractor should provide a certificate of compliance with the above recommendations.

H. Concrete subfloor must be clean and free of all foreign materials or objects including, but not limited to, curing compounds and sealers.

I. Fill cracks, grooves, voids, depressions, and other minor imperfections. Follow the manufacturer's directions. Moveable joints must be treated utilizing specific transitioning joint devices depending upon the architect's recommendations. Follow current ASTM F710 guidelines for the preparation of concrete slabs to receive resilient flooring.

J. Refer to ACI 302.2R "Guidelines for Concrete Slabs that Receive Moisture-Sensitive Flooring Materials" for concrete design and construction.

K. Concrete slab shall be fortified with continual steel reinforcement. Fiber reinforcement alone shall not be considered adequate fortification.

1.6 *WARRANTY*

A. Special Limited Warranty:
   1. Manufacturer's standard form in which manufacturer agrees to repair or replace sports flooring including labor that fails within specified warranty period.

B. Material warranty must be direct from the product manufacturer.
   1. Material warranties must come from original manufacturer or division thereof. Private label warranties from distributors or brokers are not valid. Supply original point of manufacturing upon request.

C. Failures include, but are not limited to, the following:
   1. Material manufacturing defects.
   2. Surface wear and deterioration to the point of wear-through of wear layer per ASTM F410/ASTM F1303.
   3. Failure due to substrate moisture exposure exceeding 98 percent relative humidity when tested according to ASTM F2170.

D. Warranty Period:
   1. For material defects and surface wear-through: **25** years from date of substantial completion.
   2. For moisture vapor tolerance: **25** years from date of substantial completion.

E. Installer's Limited Warranty:
   1. Installer's standard form in which installer agrees to repair or replace sports flooring that fails due to poor workmanship or faulty installation within the specified warranty period.
   2. Warranty Period: 2 years from date of substantial completion.

1.7 *ADDITIONAL MATERIALS*

A. Furnish to the owner additional materials containing a total of at least 1% of each different color or design of the indoor resilient athletic surfacing used on the project.

1.8 *LEED™ CERTIFICATION*

A. The indoor resilient athletic surfacing should be able to help this facility to achieve points towards *LEED™ certification.* Flooring system must be certified by FloorScore.
B. LEED categories positively affected by the indoor resilient athletic surfacing:

LEED™ V4 Credit		Contribution
Materials & Resources: Building Product Disclosure & Optimization (BPDO)		
MRc3: Sourcing of Raw Materials	Options 1 & 2	2 Points
MRc4: Material Ingredients	Option 1	1 Point
MRc5: Construction and Demolition Management	Reclamation and Recycling	ReStart® Program
Indoor Environmental Quality		
EQc2: Low-Emitting Materials	TVOC: 0.5 mg/m3 or less	FloorScore®

PART 2 - PRODUCTS

2.1 *MANUFACTURERS*

A. The basis of the design for the indoor resilient multipurpose surfacing is Omnisports Extreme as manufactured by Tarkett.
B. All other installation accessories and related components must be either made or approved by the indoor resilient athletic surfacing manufacturer.
C. Other products may be approved as equal if deemed qualified and submitted in accordance with the General Conditions.
D. Test reports confirming compliance from an independent sports laboratory must be provided along with samples, technical data, installation, maintenance, and warranty prior to acceptance as an alternative product.

2.2 *MATERIALS*

A. Omnisports Extreme - Prefabricated sport surface 12 mm (0.47”) with wood flooring design and slightly textured embossed surface as supplied by Tarkett.
   1. Embossing of wood design and solid colors must be the same; varying embossing or surface textures will not be allowed.
   2. Printing of wood design shall closely resemble standard wood strip flooring in size, color, board length, and grain appearance.
   3. The wood design shall be protected by a clear layer of pure PVC (Polyvinyl Chloride) and TopClean xp, a factory-applied UV cured urethane treatment.
   4. Intermediate layers shall be fortified with a non-woven fiberglass grid for increased dimensional stability.
   5. The foam force reduction layer shall be high-density closed cell PVC foam with honeycomb embossing, and is applied in one continuous manufacturing process.
   6. Laminated or adhered foam layers will not be allowed.
   7. Field constructed products will not be accepted.

A. Physical properties of the indoor resilient athletic surfacing shall conform to the following minimums:

Width	—	6’ 6” (2 m)
Length	—	49.2' (15m) approx.
Wear Layer	—	2 mm
Total Thickness	—	12 mm
Wear Layer	Type 1– Grade 1	ASTM F1303/F410
Vertical Deformation	PASSED	ASTM F2772
Rolling Load	PASSED	0.30 (EN 1569 {11/1999})
Surface Finish Effect	PASSED	ASTM F2772 (80 – 110)
Chemical Resistance	Excellent	ASTM F925
Impact Resistance	PASSED	EN 1717
Abrasion Resistance	PASSED	0.10 (EN ISO 5470-1 {06/1999})
Static Load Limit	PASSED	ASTM F970- Load 175 Lbs
Sound Insulation	Excellent	+/= 21 dB (ISO 717/2)
In-Room Sound Insulation	Excellent	61dB (NF S31-074)
Ball Rebound	PASSED	ASTM F2772 > 90%
Force Reduction	PASSED	ASTM F2772 Class 4
Fire Rating	PASSED	ASTM E648 Class 1
Microbial Assays Test	No Growth	G21 ASTM - Backing
Phthalate-free technology	—	YES
REACH Compliant	—	YES
Heavy Metals	—	NO
ISO 9001	—	YES
ISO 14001	—	YES

1. Color: As available from the indoor resilient athletic surfacing manufacturer’s standard range.
2. Hardwood Design Series: High definition printing for a realistic wood surface appearance as available from the indoor resilient athletic surfacing manufacturer’s standard range.
3. Texture: Texture to remain consistent between solid colors and wood design when blending colors.

C. Welding Rod: As supplied by the indoor resilient athletic surfacing manufacturer or supplier.
   1. Color to blend with the indoor resilient athletic surfacing color or design.
   2. All seams shall be welded to create a monolithic and impermeable surface.

D. Adhesive: As approved by the indoor resilient athletic surfacing manufacturer.

E. Game Line Paint and Primer: As approved by the indoor resilient athletic surfacing manufacturer.

PART 3 - EXECUTION

3.1 *EXAMINATION*

A. It is the responsibility of the general contractor/construction manager to ensure that project/site conditions are acceptable for the installation of the indoor resilient athletic flooring.
B. Verify that the area in which the indoor resilient athletic surfacing will be installed is dry and weather tight. Verify that permanent heat, light and ventilation are installed and operable.
C. Verify that all other work that could cause damage, dirt and dust or interrupt the normal pace of the indoor resilient athletic flooring installation is completed or suspended.
D. Verify that there is a stable room temperature of at least 65◦F.
E. Verify that there are no foreign materials or objects on the subfloor and that the subfloor is clean and ready for installation.
F. *Direct Full Spread Adhering to Concrete Subfloor Multi-Set : moisture content less than 83% RH when tested per ASTM F2170.*
G. Follow Fieldturf USA, Inc. installation recommendations.
H. Do not average the results of the tests. Report all field test results in writing to the General Contractor, Architect, and End User prior to installation.
I. Verify that the concrete subfloor surface pH level is within the 7 - 11 range.
J. Document the results confirming the slab is within manufacturer's tolerances for slab deviation.

3.2 *PREPARATION OF SURFACES*

A. Sand the entire surface of the concrete slab.
B. Sweep the concrete slab so as to remove all dirt and dust. If a sweeping compound is to be used it must be a sweeping compound that does not contain oil or other items that may inhibit the adhesive bond.
C. Slab must be dust free. In the event that dust impairs adhesive bond, priming the slab prior to application of adhesive may be necessary. Follow installation guidelines.
D. Follow OSHA guidelines.

3.3 *INSTALLATION*

A. The installation area shall be closed to all traffic and activity for a period to be set by the indoor resilient athletic surfacing installer. The indoor resilient athletic surfacing installation shall not begin until the installer is familiar with the existing conditions.
B. All necessary precautions should be taken to minimize noise, smell, dust, the use of hazardous materials and any other items that may inconvenience others.
C. Install the indoor resilient athletic surfacing in strict accordance with the indoor resilient athletic surfacing manufacturer's written instructions.
D. Install the indoor resilient athletic surfacing minimizing cross seams. Provide a seam diagram during the submittal process for approval prior to installation. Vinyl Sheet Flooring Seams: Comply with ASTM F 1516. Rout joints and heat weld to permanently and seamlessly fuse sections together.
E. Paint game lines using approved game line paint primer and game line paint in strict accordance with the game line paint manufacturer's instructions.
F. Install appropriate threshold plates or transition strips where necessary.

3.5 *CLEANING*

A. Remove all unused materials, tools, and equipment and dispose of any debris properly. Clean the indoor resilient athletic surfacing in accordance with the manufacturer's instructions.

3.6 *PROTECTION*

A. If required, protect the indoor resilient athletic surfacing from damage using coverings approved by the manufacturer until acceptance of work by the customer or their authorized representative.

3.7 *RELATED STANDARDS AND GUIDELINES*

A. ASTM F2170 "Standard Test Method for Determining Relative Humidity In Concrete Floor Slabs Using In-Situ Probes"
B. ASTM F710 "Standard Practice for Preparing Concrete Floors to Receive Resilient Flooring"
C. ACI 302.2R-06 "Guideline for Concrete Slabs that Receive Moisture-Sensitive Flooring Materials"
D. ASTM F2772-11 "Standard Specification for Athletic Performance Properties of Indoor Sports Floor Systems"

END OF SECTION

SECTION 09 65 66
ARCHITECTURAL SPECIFICATIONS FOR INDOOR RESILIENT ATHLETIC SURFACING

PART 1 – GENERAL

1.1 *SECTION INCLUDES*

A. Supply and installation of the indoor resilient multipurpose surfacing
B. Application of the game lines
C. References for the correct construction and preparation of concrete slabs to receive resilient flooring.

1.2 *SUBMITTALS*

A. Product Data:
   1. Manufacturer's promotional brochures, specifications and installation instructions
B. Manufacturer Certifications:
   1. Provide certification that accurately identifies the Original Equipment Manufacturer (OEM) of flooring furnished for this project including manufacturer's name, address and factory location.
   2. Suppliers of private label flooring for this project must identify themselves as such and fully disclose the OEM information listed above.
   3. All "manufacturer" requirements in these specifications must be complied with by the OEM, including warranties, certifications, qualifications, product data, test results, environmental requirements, performance data, etc.
C. Samples:
   1. Submit for selection and approval three (3) sets of the indoor resilient multipurpose surfacing, manufacturer's brochures, samples or sample boards of all of the available colors, textures and styles.
   2. Submit color samples of all the available game line paint colors for selection and approval.
D. Closeout Submittals:
   1. Submit three (3) copies of the indoor resilient multipurpose surfacing and manufacturer's maintenance instructions.
   2. Submit three (3) copies of the material and installation warranties as specified.

1.3 *QUALITY ASSURANCE*

A. Qualifications:
   1. The indoor resilient multipurpose surfacing shall have been actively marketed for a minimum of ten (10) years.
   2. The indoor resilient multipurpose surfacing shall be manufactured in an ISO 9001 certified plant.
   3. The indoor resilient multipurpose surfacing shall be manufactured in an ISO 14001 certified plant.
   4. The indoor resilient multipurpose surfacing supplier shall be an established firm, experienced in the field, and competent in the techniques required by the manufacturer.
   5. The installer of the indoor resilient multipurpose surfacing shall have a minimum of five (5) years of experience in the field installing indoor resilient multipurpose surfacing and have worked on at least five (5) projects of similar size, type and complexity.

B. Certifications:
   1. Installer to submit the indoor resilient athletic surfacing manufacturer's or distributor's certification attesting that they are an approved installer of the indoor resilient multipurpose surfacing.
   2. The ind**o**or resilient multipurpose surfacing manufacturer to submit official ISO 9001 certification for the facility in which the indoor resilient multipurpose surfacing is manufactured.

C. Testing:
   Tests shall be relative for multi-purpose use with certificates from independent testing resources to be made available upon request. Test results shall be performed according to ASTM standard testing procedures including ASTM F2772 "Standard Specification for Athletic Performance Properties of Indoor Sports Floor Systems".

1.4 *DELIVERY, STORAGE AND HANDLING*

A. Delivery:
   Material shall not be delivered until all related work is in place and finished and/or proper storage facilities and conditions can be provided and guaranteed stable according to FieldTurf USA, Inc. recommendations.

B. Storage:
   1. Store the material in a secure, clean and dry location.
   2. Maintain temperature between 55° and 85° Fahrenheit.
   3. Store the indoor resilient athletic surfacing rolls in an upright position on a smooth flat surface immediately upon delivery to jobsite.
   4. Rolls shipped in rigid protective cardboard containers can be laid horizontally prior to unpacking and installation.

1.5 *PROJECT/SITE CONDITIONS*

A. It is the responsibility of the general contractor/construction manager to maintain project/site conditions acceptable for the installation of the indoor resilient multipurpose flooring.

B. The area in which the indoor resilient multipurpose surfacing will be installed shall be dry and weather tight. Permanent heat, light and ventilation shall be installed and operable.

C. All other trades shall have completed their work prior to the installation of the resilient athletic flooring. The general contractor or construction manager shall maintain a secure and clean working environment before, during and after the installation.

D. Maintain a stable room temperature of at least 65°F for a minimum of one (1) week prior to, during and thereafter installation.

E. An effective low-permeance vapor barrier is placed directly beneath the concrete subfloor. For "on" or "below grade" installations, it is recommended to provide a permanent vapor barrier resistant to long term hydrostatic pressure/moisture exposure. Protrusions should be sealed to prevent moisture migration into the slab. Moisture should not be allowed to enter the slab after the completed construction.

F. Concrete subfloor surface pH level within the 7 to 11 range dependent upon installation type.

G. Concrete subfloor should be no greater than 1/8" within a 10 ft diameter. This tolerance can be measured in accordance with ASTM E1155. A specified (F_F) of 50 and an (F_L) of 30 should reach this degree of floor flatness and floor level. There is no numerical correlation between F numbers and the deviation from the straight

edge. However, the above specified numbers should achieve a flat floor with minimal deviation in the slab. Reference ACI 117 and ACI 302.1R. The general contractor should provide a certificate of compliance with the above recommendations.

H. Concrete subfloor must be clean and free of all foreign materials or objects including, but not limited to, curing compounds and sealers.

I. Fill cracks, grooves, voids, depressions, and other minor imperfections. Follow the manufacturer's directions. Moveable joints must be treated utilizing specific transitioning joint devices depending upon the architect's recommendations. Follow current ASTM F710 guidelines for the preparation of concrete slabs to receive resilient flooring.

J. Refer to ACI 302.2R "Guidelines for Concrete Slabs that Receive Moisture-Sensitive Flooring Materials" for concrete design and construction.

K. Concrete slab shall be fortified with continual steel reinforcement. Fiber reinforcement alone shall not be considered adequate fortification.

1.6 *WARRANTY*

A. Special Limited Warranty:
   1. Manufacturer's standard form in which manufacturer agrees to repair or replace sports flooring including labor that fails within specified warranty period.

B. Material warranty must be direct from the product manufacturer.
   1. Material warranties must come from original manufacturer or division thereof. Private label warranties from distributors or brokers are not valid. Supply original point of manufacturing upon request.

C. Failures include, but are not limited to, the following:
   1. Material manufacturing defects.
   2. Surface wear and deterioration to the point of wear-through of wear layer per ASTM F410/ASTM F1303.
   3. Failure due to substrate moisture exposure exceeding 98 percent relative humidity when tested according to ASTM F2170.

D. Warranty Period:
   1. For material defects and surface wear-through: **25** years from date of substantial completion.
   2. For moisture vapor tolerance: **25** years from date of substantial completion.

E. Installer's Limited Warranty:
   1. Installer's standard form in which installer agrees to repair or replace sports flooring that fails due to poor workmanship or faulty installation within the specified warranty period.
   2. Warranty Period: 2 years from date of substantial completion.

1.7 *ADDITIONAL MATERIALS*

A. Furnish to the owner additional materials containing a total of at least 1% of each different color or design of the indoor resilient athletic surfacing used on the project.

1.8 *LEED™ CERTIFICATION*

A. The indoor resilient athletic surfacing should be able to help this facility to achieve points towards *LEED™ certification.* Flooring system must be certified by FloorScore.
B. LEED categories positively affected by the indoor resilient athletic surfacing:

LEED™ V4 Credit		Contribution
Materials & Resources: Building Product Disclosure & Optimization (BPDO)		
MRc3: Sourcing of Raw Materials	Options 1 & 2	2 Points
MRc4: Material Ingredients	Option 1	1 Point
MRc5: Construction and Demolition Management	Reclamation and Recycling	ReStart® Program
Indoor Environmental Quality		
EQc2: Low-Emitting Materials	TVOC: 0.5 mg/m3 or less	FloorScore®

PART 2 - PRODUCTS

2.1 *MANUFACTURERS*

A. The basis of the design for the indoor resilient multipurpose surfacing is Omnisports Extreme as manufactured by Tarkett.
B. All other installation accessories and related components must be either made or approved by the indoor resilient athletic surfacing manufacturer.
C. Other products may be approved as equal if deemed qualified and submitted in accordance with the General Conditions.
D. Test reports confirming compliance from an independent sports laboratory must be provided along with samples, technical data, installation, maintenance, and warranty prior to acceptance as an alternative product.

2.2 *MATERIALS*

A. Omnisports Extreme - Prefabricated sport surface 12 mm (0.47”) with wood flooring design and slightly textured embossed surface as supplied by Tarkett.
   1. Embossing of wood design and solid colors must be the same; varying embossing or surface textures will not be allowed.
   2. Printing of wood design shall closely resemble standard wood strip flooring in size, color, board length, and grain appearance.
   3. The wood design shall be protected by a clear layer of pure PVC (Polyvinyl Chloride) and TopClean xp, a factory-applied UV cured urethane treatment.
   4. Intermediate layers shall be fortified with a non-woven fiberglass grid for increased dimensional stability.
   5. The foam force reduction layer shall be high-density closed cell PVC foam with honeycomb embossing, and is applied in one continuous manufacturing process.
   6. Laminated or adhered foam layers will not be allowed.
   7. Field constructed products will not be accepted.

A. Physical properties of the indoor resilient athletic surfacing shall conform to the following minimums:

Width	—	6’ 6” (2 m)
Length	—	49.2' (15m) approx.
Wear Layer	—	2 mm
Total Thickness	—	12 mm
Wear Layer	Type 1– Grade 1	ASTM F1303/F410
Vertical Deformation	PASSED	ASTM F2772
Rolling Load	PASSED	0.30 (EN 1569 {11/1999})
Surface Finish Effect	PASSED	ASTM F2772 (80 – 110)
Chemical Resistance	Excellent	ASTM F925
Impact Resistance	PASSED	EN 1717
Abrasion Resistance	PASSED	0.10 (EN ISO 5470-1 {06/1999})
Static Load Limit	PASSED	ASTM F970- Load 175 Lbs
Sound Insulation	Excellent	+/= 21 dB (ISO 717/2)
In-Room Sound Insulation	Excellent	61dB (NF S31-074)
Ball Rebound	PASSED	ASTM F2772 > 90%
Force Reduction	PASSED	ASTM F2772 Class 4
Fire Rating	PASSED	ASTM E648 Class 1
Microbial Assays Test	No Growth	G21 ASTM - Backing
Phthalate-free technology	—	YES
REACH Compliant	—	YES
Heavy Metals	—	NO
ISO 9001	—	YES
ISO 14001	—	YES

1. Color: As available from the indoor resilient athletic surfacing manufacturer’s standard range.
2. Hardwood Design Series: High definition printing for a realistic wood surface appearance as available from the indoor resilient athletic surfacing manufacturer’s standard range.
3. Texture: Texture to remain consistent between solid colors and wood design when blending colors.

C. Tarkolay – A high quality low permeance slip sheet vapor retarder designed to separate the installed system from the substrate below.
   1. Tarkolay as manufactured by Tarkett can be used below, on, or above grade substrates that experience elevated moisture conditions.
   2. Moisture tolerances shall have no limitation per ASTM F2170. Physical properties of the indoor resilient athletic surfacing shall conform to the following minimums:

Width	—	6’ 6” (2 m)
Length	—	147’7”’ (45 m) approx.
Total Thickness	—	1.3 mm
Dimensional Stability	PASSED	.01% (EN 1434)
Permeance	Excellent	<0.20 (ASTM E96

D. Welding Rod: As supplied by the indoor resilient athletic surfacing manufacturer or supplier.
   1. Color to blend with the indoor resilient athletic surfacing color or design.
   2. All seams shall be welded to create a monolithic and impermeable surface.
E. Adhesive: As approved by the indoor resilient athletic surfacing manufacturer.
F. Game Line Paint and Primer: As approved by the indoor resilient athletic surfacing manufacturer.

PART 3 - EXECUTION

3.1 *EXAMINATION*

A. It is the responsibility of the general contractor/construction manager to ensure that project/site conditions are acceptable for the installation of the indoor resilient athletic flooring.
B. Verify that the area in which the indoor resilient athletic surfacing will be installed is dry and weather tight. Verify that permanent heat, light and ventilation are installed and operable.
C. Verify that all other work that could cause damage, dirt and dust or interrupt the normal pace of the indoor resilient athletic flooring installation is completed or suspended.
D. Verify that there is a stable room temperature of at least 65°F.
E. Verify that there are no foreign materials or objects on the subfloor and that the subfloor is clean and ready for installation.
F. *Installation with Tarkolay to Concrete Subfloor : moisture content no limitation when tested per ASTM F2170.*
G. Follow Fieldturf USA, Inc. installation recommendations.
H. Do not average the results of the tests. Report all field test results in writing to the General Contractor, Architect, and End User prior to installation.
I. Verify that the concrete subfloor surface pH level is within the 7 - 11 range.
J. Document the results confirming the slab is within manufacturer's tolerances for slab deviation.

3.2 *PREPARATION OF SURFACES*

A. Sand the entire surface of the concrete slab.
B. Sweep the concrete slab so as to remove all dirt and dust. If a sweeping compound is to be used it must be a sweeping compound that does not contain oil or other items that may inhibit the adhesive bond.
C. Slab must be dust free. In the event that dust impairs adhesive bond, priming the slab prior to application of adhesive may be necessary. Follow installation guidelines.
D. Follow OSHA guidelines.

3.3 *INSTALLATION*

A. The installation area shall be closed to all traffic and activity for a period to be set by the indoor resilient athletic surfacing installer. The indoor resilient athletic surfacing installation shall not begin until the installer is familiar with the existing conditions.
B. All necessary precautions should be taken to minimize noise, smell, dust, the use of hazardous materials and any other items that may inconvenience others.
C. Install the indoor resilient athletic surfacing in strict accordance with the indoor resilient athletic surfacing manufacturer's written instructions.
D. Install the indoor resilient athletic surfacing minimizing cross seams. Provide a seam diagram during the submittal process for approval prior to installation. Vinyl Sheet Flooring Seams: Comply with ASTM F 1516. Rout joints and heat weld to permanently and seamlessly fuse sections together.
E. Paint game lines using approved game line paint primer and game line paint in strict accordance with the game line paint manufacturer's instructions.
F. Install appropriate threshold plates or transition strips where necessary.

3.5 *CLEANING*

A. Remove all unused materials, tools, and equipment and dispose of any debris properly. Clean the indoor resilient athletic surfacing in accordance with the manufacturer's instructions.

3.6 *PROTECTION*

A. If required, protect the indoor resilient athletic surfacing from damage using coverings approved by the manufacturer until acceptance of work by the customer or their authorized representative.

3.7 *RELATED STANDARDS AND GUIDELINES*

A. ASTM F2170 "Standard Test Method for Determining Relative Humidity In Concrete Floor Slabs Using In-Situ Probes"
B. ASTM F710 "Standard Practice for Preparing Concrete Floors to Receive Resilient Flooring"
C. ACI 302.2R-06 "Guideline for Concrete Slabs that Receive Moisture-Sensitive Flooring Materials"
D. ASTM F2772-11 "Standard Specification for Athletic Performance Properties of Indoor Sports Floor Systems"

END OF SECTION

SECTION 09 65 66
ARCHITECTURAL SPECIFICATIONS FOR INDOOR RESILIENT ATHLETIC SURFACING

PART 1 – GENERAL

1.1 *SECTION INCLUDES*

A. Supply and installation of the indoor resilient multipurpose surfacing
B. Application of the game lines
C. References for the correct construction and preparation of concrete slabs to receive resilient flooring.

1.2 *SUBMITTALS*

A. Product Data:
   1. Manufacturer's promotional brochures, specifications and installation instructions
B. Manufacturer Certifications:
   1. Provide certification that accurately identifies the Original Equipment Manufacturer (OEM) of flooring furnished for this project including manufacturer's name, address and factory location.
   2. Suppliers of private label flooring for this project must identify themselves as such and fully disclose the OEM information listed above.
   3. All "manufacturer" requirements in these specifications must be complied with by the OEM, including warranties, certifications, qualifications, product data, test results, environmental requirements, performance data, etc.
C. Samples:
   1. Submit for selection and approval three (3) sets of the indoor resilient multipurpose surfacing, manufacturer's brochures, samples or sample boards of all of the available colors, textures and styles.
   2. Submit color samples of all the available game line paint colors for selection and approval.
D. Closeout Submittals:
   1. Submit three (3) copies of the indoor resilient multipurpose surfacing and manufacturer's maintenance instructions.
   2. Submit three (3) copies of the material and installation warranties as specified.

1.3 *QUALITY ASSURANCE*

A. Qualifications:
   1. The indoor resilient multipurpose surfacing shall have been actively marketed for a minimum of ten (10) years.
   2. The indoor resilient multipurpose surfacing shall be manufactured in an ISO 9001 certified plant.
   3. The indoor resilient multipurpose surfacing shall be manufactured in an ISO 14001 certified plant.
   4. The indoor resilient multipurpose surfacing supplier shall be an established firm, experienced in the field, and competent in the techniques required by the manufacturer.
   5. The installer of the indoor resilient multipurpose surfacing shall have a minimum of five (5) years of experience in the field installing indoor resilient multipurpose surfacing and have worked on at least five (5) projects of similar size, type and complexity.

B. Certifications:
   1. Installer to submit the indoor resilient athletic surfacing manufacturer's or distributor's certification attesting that they are an approved installer of the indoor resilient multipurpose surfacing.
   2. The ind**o**or resilient multipurpose surfacing manufacturer to submit official ISO 9001 certification for the facility in which the indoor resilient multipurpose surfacing is manufactured.

C. Testing:
   Tests shall be relative for multi-purpose use with certificates from independent testing resources to be made available upon request. Test results shall be performed according to ASTM standard testing procedures including ASTM F2772 "Standard Specification for Athletic Performance Properties of Indoor Sports Floor Systems".

1.4 *DELIVERY, STORAGE AND HANDLING*

A. Delivery:
   Material shall not be delivered until all related work is in place and finished and/or proper storage facilities and conditions can be provided and guaranteed stable according to FieldTurf USA, Inc. recommendations.

B. Storage:
   1. Store the material in a secure, clean and dry location.
   2. Maintain temperature between 55° and 85° Fahrenheit.
   3. Store the indoor resilient athletic surfacing rolls in an upright position on a smooth flat surface immediately upon delivery to jobsite.
   4. Rolls shipped in rigid protective cardboard containers can be laid horizontally prior to unpacking and installation.

1.5 *PROJECT/SITE CONDITIONS*

A. It is the responsibility of the general contractor/construction manager to maintain project/site conditions acceptable for the installation of the indoor resilient multipurpose flooring.

B. The area in which the indoor resilient multipurpose surfacing will be installed shall be dry and weather tight. Permanent heat, light and ventilation shall be installed and operable.

C. All other trades shall have completed their work prior to the installation of the resilient athletic flooring. The general contractor or construction manager shall maintain a secure and clean working environment before, during and after the installation.

D. Maintain a stable room temperature of at least 65°F for a minimum of one (1) week prior to, during and thereafter installation.

E. An effective low-permeance vapor barrier is placed directly beneath the concrete subfloor. For "on" or "below grade" installations, it is recommended to provide a permanent vapor barrier resistant to long term hydrostatic pressure/moisture exposure. Protrusions should be sealed to prevent moisture migration into the slab. Moisture should not be allowed to enter the slab after the completed construction.

F. Concrete subfloor surface pH level within the 7 to 11 range dependent upon installation type.

G. Concrete subfloor should be no greater than 1/8" within a 10 ft diameter. This tolerance can be measured in accordance with ASTM E1155. A specified (F_F) of 50 and an (F_L) of 30 should reach this degree of floor flatness and floor level. There is no numerical correlation between F numbers and the deviation from the straight

edge. However, the above specified numbers should achieve a flat floor with minimal deviation in the slab. Reference ACI 117 and ACI 302.1R. The general contractor should provide a certificate of compliance with the above recommendations.

H. Concrete subfloor must be clean and free of all foreign materials or objects including, but not limited to, curing compounds and sealers.

I. Fill cracks, grooves, voids, depressions, and other minor imperfections. Follow the manufacturer's directions. Moveable joints must be treated utilizing specific transitioning joint devices depending upon the architect's recommendations. Follow current ASTM F710 guidelines for the preparation of concrete slabs to receive resilient flooring.

J. Refer to ACI 302.2R "Guidelines for Concrete Slabs that Receive Moisture-Sensitive Flooring Materials" for concrete design and construction.

K. Concrete slab shall be fortified with continual steel reinforcement. Fiber reinforcement alone shall not be considered adequate fortification.

1.6 *WARRANTY*

A. Special Limited Warranty:
   1. Manufacturer's standard form in which manufacturer agrees to repair or replace sports flooring including labor that fails within specified warranty period.

B. Material warranty must be direct from the product manufacturer.
   1. Material warranties must come from original manufacturer or division thereof. Private label warranties from distributors or brokers are not valid. Supply original point of manufacturing upon request.

C. Failures include, but are not limited to, the following:
   1. Material manufacturing defects.
   2. Surface wear and deterioration to the point of wear-through of wear layer per ASTM F410/ASTM F1303.
   3. Failure due to substrate moisture exposure exceeding 98 percent relative humidity when tested according to ASTM F2170.

D. Warranty Period:
   1. <u>For material defects and surface wear-through:</u> **15** years from date of substantial completion.
   2. <u>For moisture vapor tolerance:</u> **15** years from date of substantial completion.

E. Installer's Limited Warranty:
   1. Installer's standard form in which installer agrees to repair or replace sports flooring that fails due to poor workmanship or faulty installation within the specified warranty period.
   2. Warranty Period: 2 years from date of substantial completion.

1.7 *ADDITIONAL MATERIALS*

A. Furnish to the owner additional materials containing a total of at least 1% of each different color or design of the indoor resilient athletic surfacing used on the project.

1.8 *LEED™ CERTIFICATION*

A. The indoor resilient athletic surfacing should be able to help this facility to achieve points towards *LEED™ certification.*
B. LEED categories positively affected by the indoor resilient athletic surfacing:

LEED™ V4 Credit		Contribution
Materials & Resources: Building Product Disclosure & Optimization (BPDO)		
MRc3: Sourcing of Raw Materials	Options 1 & 2	2 Points
MRc4: Material Ingredients	Option 1	1 Point
MRc5: Construction and Demolition Management	Reclamation and Recycling	ReStart® Program

PART 2 - PRODUCTS

2.1 *MANUFACTURERS*

A. The basis of the design for the indoor resilient multipurpose surfacing is Omnisports HPL 7 mm as manufactured by Tarkett.
B. All other installation accessories and related components must be either made or approved by the indoor resilient athletic surfacing manufacturer.
C. Other products may be approved as equal if deemed qualified and submitted in accordance with the General Conditions.
D. Test reports confirming compliance from an independent sports laboratory must be provided along with samples, technical data, installation, maintenance, and warranty prior to acceptance as an alternative product.

2.2 *MATERIALS*

A. Omnisports HPL 7 mm - Prefabricated sport surface with wood flooring design and slightly textured embossed surface as supplied by Tarkett.
   1. Embossing of wood design and solid colors must be the same; varying embossing or surface textures will not be allowed.
   2. Printing of wood design shall closely resemble standard wood strip flooring in size, color, board length, and grain appearance.
   3. The wood design shall be protected by a clear layer of pure PVC (Polyvinyl Chloride) and TopClean xp, a factory-applied UV cured urethane treatment.
   4. Intermediate layers shall be fortified with a non-woven fiberglass grid for increased dimensional stability.
   5. A high density load resistant underlayment, field constructed and installed per manufacturer's construction specifications incorporated to provide higher load resistance.

B. Physical properties of the indoor resilient athletic surfacing shall conform to the following minimums:

Width	Omnisports	6′ 6″ (2 m)
Length	Omnisports	85′ (25.9m) approx.
Wear Layer	Omnisports	2 mm
Total Thickness	Omnisports HPL	7 mm (5 + 2)
High Density Underlayment	ASTM D297	0.67 g/cm^3
Tear Strength	ASTM D412	410-425 min. Die C
Elongation	ASTM D412	120-125 min. Die C
Static Load	ASTM F970	500 psi
Reaction to Fire	ASTM E648	Class 1
Specular Gloss	EN ISO 2813	13%
Wear Layer	Type 1, Grade 1	ASTM F1303/F410
Taber Abrasion	ASTM D3389	0.02 g (1000 cycles)
Stain Resistance	ASTM F925	Excellent
Moisture Tolerance with Multi-Poxy	ASTM F2170	98% RH
Vertical Deformation	PASSED	ASTM F2772
Surface Finish Effect	PASSED	ASTM F2772 (80 - 100)
Ball Rebound	PASSED	ASTM F2772 >90%
Force Reduction	PASSED	ASTM F2772 Class 1
Phthalate-free technology	—	YES
REACH Compliant	—	YES
Heavy Metals	—	NO
ISO 9001	—	YES
ISO 14001	—	YES

1. Color: As available from the indoor resilient athletic surfacing manufacturer's standard range.
2. Hardwood Design Series: High definition printing for a realistic wood surface appearance as available from the indoor resilient athletic surfacing manufacturer's standard range.
3. Texture: Texture to remain consistent between solid colors and wood design when blending colors.

C. Welding Rod: As supplied by the indoor resilient athletic surfacing manufacturer or supplier.
   1. Color to blend with the indoor resilient athletic surfacing color or design.
   2. All seams shall be welded to create a monolithic and impermeable surface.

D. Adhesive: As approved by the indoor resilient athletic surfacing manufacturer.

E. Game Line Paint and Primer: As approved by the indoor resilient athletic surfacing manufacturer.

PART 3 - EXECUTION

3.1 *EXAMINATION*

A. It is the responsibility of the general contractor/construction manager to ensure that project/site conditions are acceptable for the installation of the indoor resilient athletic flooring.
B. Verify that the area in which the indoor resilient athletic surfacing will be installed is dry and weather tight. Verify that permanent heat, light and ventilation are installed and operable.
C. Verify that all other work that could cause damage, dirt and dust or interrupt the normal pace of the indoor resilient athletic flooring installation is completed or suspended.
D. Verify that there is a stable room temperature of at least 65◦F.
E. Verify that there are no foreign materials or objects on the subfloor and that the subfloor is clean and ready for installation.
F. *Direct Full Spread Adhering to Concrete Subfloor Multi-Poxy : moisture content less than 98% RH when tested per ASTM F2170.*
G. Follow Fieldturf USA, Inc. installation recommendations.
H. Do not average the results of the tests. Report all field test results in writing to the General Contractor, Architect, and End User prior to installation.
I. Verify that the concrete subfloor surface pH level is within the 7 - 11 range.
J. Document the results confirming the slab is within manufacturer's tolerances for slab deviation.

3.2 *PREPARATION OF SURFACES*

A. Sand the entire surface of the concrete slab.
B. Sweep the concrete slab so as to remove all dirt and dust. If a sweeping compound is to be used it must be a sweeping compound that does not contain oil or other items that may inhibit the adhesive bond.
C. Slab must be dust free. In the event that dust impairs adhesive bond, priming the slab prior to application of adhesive may be necessary. Follow installation guidelines.
D. Follow OSHA guidelines.

3.3 *INSTALLATION*

A. The installation area shall be closed to all traffic and activity for a period to be set by the indoor resilient athletic surfacing installer. The indoor resilient athletic surfacing installation shall not begin until the installer is familiar with the existing conditions.
B. All necessary precautions should be taken to minimize noise, smell, dust, the use of hazardous materials and any other items that may inconvenience others.
C. Install the indoor resilient athletic surfacing in strict accordance with the indoor resilient athletic surfacing manufacturer's written instructions.
D. Install the indoor resilient athletic surfacing minimizing cross seams. Provide a seam diagram during the submittal process for approval prior to installation. Vinyl Sheet Flooring Seams: Comply with ASTM F 1516. Rout joints and heat weld to permanently and seamlessly fuse sections together.
E. Paint game lines using approved game line paint primer and game line paint in strict accordance with the game line paint manufacturer's instructions.
F. Install appropriate threshold plates or transition strips where necessary.

3.5 *CLEANING*

A. Remove all unused materials, tools, and equipment and dispose of any debris properly. Clean the indoor resilient athletic surfacing in accordance with the manufacturer's instructions.

3.6 *PROTECTION*

A. If required, protect the indoor resilient athletic surfacing from damage using coverings approved by the manufacturer until acceptance of work by the customer or their authorized representative.

3.7 *RELATED STANDARDS AND GUIDELINES*

A. ASTM F2170 "Standard Test Method for Determining Relative Humidity In Concrete Floor Slabs Using In-Situ Probes"
B. ASTM F710 "Standard Practice for Preparing Concrete Floors to Receive Resilient Flooring"
C. ACI 302.2R-06 "Guideline for Concrete Slabs that Receive Moisture-Sensitive Flooring Materials"
D. ASTM F2772-11 "Standard Specification for Athletic Performance Properties of Indoor Sports Floor Systems"

END OF SECTION

SECTION 09 65 66
ARCHITECTURAL SPECIFICATIONS FOR INDOOR RESILIENT ATHLETIC SURFACING

PART 1 – GENERAL

1.1 *SECTION INCLUDES*

A. Supply and installation of the indoor resilient multipurpose surfacing
B. Application of the game lines
C. References for the correct construction and preparation of concrete slabs to receive resilient flooring.

1.2 *SUBMITTALS*

A. Product Data:
   1. Manufacturer's promotional brochures, specifications and installation instructions
B. Manufacturer Certifications:
   1. Provide certification that accurately identifies the Original Equipment Manufacturer (OEM) of flooring furnished for this project including manufacturer's name, address and factory location.
   2. Suppliers of private label flooring for this project must identify themselves as such and fully disclose the OEM information listed above.
   3. All "manufacturer" requirements in these specifications must be complied with by the OEM, including warranties, certifications, qualifications, product data, test results, environmental requirements, performance data, etc.
C. Samples:
   1. Submit for selection and approval three (3) sets of the indoor resilient multipurpose surfacing, manufacturer's brochures, samples or sample boards of all of the available colors, textures and styles.
   2. Submit color samples of all the available game line paint colors for selection and approval.
D. Closeout Submittals:
   1. Submit three (3) copies of the indoor resilient multipurpose surfacing and manufacturer's maintenance instructions.
   2. Submit three (3) copies of the material and installation warranties as specified.

1.3 *QUALITY ASSURANCE*

A. Qualifications:
   1. The indoor resilient multipurpose surfacing shall have been actively marketed for a minimum of ten (10) years.
   2. The indoor resilient multipurpose surfacing shall be manufactured in an ISO 9001 certified plant.
   3. The indoor resilient multipurpose surfacing shall be manufactured in an ISO 14001 certified plant.
   4. The indoor resilient multipurpose surfacing supplier shall be an established firm, experienced in the field, and competent in the techniques required by the manufacturer.
   5. The installer of the indoor resilient multipurpose surfacing shall have a minimum of five (5) years of experience in the field installing indoor resilient multipurpose surfacing and have worked on at least five (5) projects of similar size, type and complexity.

B. Certifications:
   1. Installer to submit the indoor resilient athletic surfacing manufacturer's or distributor's certification attesting that they are an approved installer of the indoor resilient multipurpose surfacing.
   2. The ind**o**or resilient multipurpose surfacing manufacturer to submit official ISO 9001 certification for the facility in which the indoor resilient multipurpose surfacing is manufactured.

C. Testing:
   Tests shall be relative for multi-purpose use with certificates from independent testing resources to be made available upon request. Test results shall be performed according to ASTM standard testing procedures including ASTM F2772 "Standard Specification for Athletic Performance Properties of Indoor Sports Floor Systems".

1.4 *DELIVERY, STORAGE AND HANDLING*

A. Delivery:
   Material shall not be delivered until all related work is in place and finished and/or proper storage facilities and conditions can be provided and guaranteed stable according to FieldTurf USA, Inc. recommendations.

B. Storage:
   1. Store the material in a secure, clean and dry location.
   2. Maintain temperature between 55° and 85° Fahrenheit.
   3. Store the indoor resilient athletic surfacing rolls in an upright position on a smooth flat surface immediately upon delivery to jobsite.
   4. Rolls shipped in rigid protective cardboard containers can be laid horizontally prior to unpacking and installation.

1.5 *PROJECT/SITE CONDITIONS*

A. It is the responsibility of the general contractor/construction manager to maintain project/site conditions acceptable for the installation of the indoor resilient multipurpose flooring.

B. The area in which the indoor resilient multipurpose surfacing will be installed shall be dry and weather tight. Permanent heat, light and ventilation shall be installed and operable.

C. All other trades shall have completed their work prior to the installation of the resilient athletic flooring. The general contractor or construction manager shall maintain a secure and clean working environment before, during and after the installation.

D. Maintain a stable room temperature of at least 65°F for a minimum of one (1) week prior to, during and thereafter installation.

E. An effective low-permeance vapor barrier is placed directly beneath the concrete subfloor. For "on" or "below grade" installations, it is recommended to provide a permanent vapor barrier resistant to long term hydrostatic pressure/moisture exposure. Protrusions should be sealed to prevent moisture migration into the slab. Moisture should not be allowed to enter the slab after the completed construction.

F. Concrete subfloor surface pH level within the 7 to 11 range dependent upon installation type.

G. Concrete subfloor should be no greater than 1/8" within a 10 ft diameter. This tolerance can be measured in accordance with ASTM E1155. A specified (F_F) of 50 and an (F_L) of 30 should reach this degree of floor flatness and floor level. There is no numerical correlation between F numbers and the deviation from the straight

edge. However, the above specified numbers should achieve a flat floor with minimal deviation in the slab. Reference ACI 117 and ACI 302.1R. The general contractor should provide a certificate of compliance with the above recommendations.

H. Concrete subfloor must be clean and free of all foreign materials or objects including, but not limited to, curing compounds and sealers.

I. Fill cracks, grooves, voids, depressions, and other minor imperfections. Follow the manufacturer's directions. Moveable joints must be treated utilizing specific transitioning joint devices depending upon the architect's recommendations. Follow current ASTM F710 guidelines for the preparation of concrete slabs to receive resilient flooring.

J. Refer to ACI 302.2R "Guidelines for Concrete Slabs that Receive Moisture-Sensitive Flooring Materials" for concrete design and construction.

K. Concrete slab shall be fortified with continual steel reinforcement. Fiber reinforcement alone shall not be considered adequate fortification.

1.6 *WARRANTY*

A. Special Limited Warranty:
   1. Manufacturer's standard form in which manufacturer agrees to repair or replace sports flooring including labor that fails within specified warranty period.

B. Material warranty must be direct from the product manufacturer.
   1. Material warranties must come from original manufacturer or division thereof. Private label warranties from distributors or brokers are not valid. Supply original point of manufacturing upon request.

C. Failures include, but are not limited to, the following:
   1. Material manufacturing defects.
   2. Surface wear and deterioration to the point of wear-through of wear layer per ASTM F410/ASTM F1303.
   3. Failure due to substrate moisture exposure exceeding 98 percent relative humidity when tested according to ASTM F2170.

D. Warranty Period:
   1. <u>For material defects and surface wear-through:</u> **15** years from date of substantial completion.
   2. <u>For moisture vapor tolerance:</u> **15** years from date of substantial completion.

E. Installer's Limited Warranty:
   1. Installer's standard form in which installer agrees to repair or replace sports flooring that fails due to poor workmanship or faulty installation within the specified warranty period.
   2. Warranty Period: 2 years from date of substantial completion.

1.7 *ADDITIONAL MATERIALS*

A. Furnish to the owner additional materials containing a total of at least 1% of each different color or design of the indoor resilient athletic surfacing used on the project.

1.8 *LEED™ CERTIFICATION*

A. The indoor resilient athletic surfacing should be able to help this facility to achieve points towards *LEED™ certification.*
B. LEED categories positively affected by the indoor resilient athletic surfacing:

LEED™ V4 Credit		Contribution
Materials & Resources: Building Product Disclosure & Optimization (BPDO)		
MRc3: Sourcing of Raw Materials	Options 1 & 2	2 Points
MRc4: Material Ingredients	Option 1	1 Point
MRc5: Construction and Demolition Management	Reclamation and Recycling	ReStart® Program

PART 2 - PRODUCTS

2.1 *MANUFACTURERS*

A. The basis of the design for the indoor resilient multipurpose surfacing is Omnisports HPL 9 mm as manufactured by Tarkett.
B. All other installation accessories and related components must be either made or approved by the indoor resilient athletic surfacing manufacturer.
C. Other products may be approved as equal if deemed qualified and submitted in accordance with the General Conditions.
D. Test reports confirming compliance from an independent sports laboratory must be provided along with samples, technical data, installation, maintenance, and warranty prior to acceptance as an alternative product.

2.2 *MATERIALS*

A. Omnisports HPL 9 mm - Prefabricated sport surface with wood flooring design and slightly textured embossed surface as supplied by Tarkett.
   1. Embossing of wood design and solid colors must be the same; varying embossing or surface textures will not be allowed.
   2. Printing of wood design shall closely resemble standard wood strip flooring in size, color, board length, and grain appearance.
   3. The wood design shall be protected by a clear layer of pure PVC (Polyvinyl Chloride) and TopClean xp, a factory-applied UV cured urethane treatment.
   4. Intermediate layers shall be fortified with a non-woven fiberglass grid for increased dimensional stability.
   5. A high density load resistant underlayment, field constructed and installed per manufacturer's construction specifications incorporated to provide higher load resistance.

B. Physical properties of the indoor resilient athletic surfacing shall conform to the following minimums:

Width	Omnisports	6′ 6″ (2 m)
Length	Omnisports	85′ (25.9m) approx.
Wear Layer	Omnisports	2 mm
Total Thickness	Omnisports HPL	9 mm (7 + 2)
High Density Underlayment	ASTM D297	0.67 g/cm^3
Tear Strength	ASTM D412	410-425 min. Die C
Elongation	ASTM D412	120-125 min. Die C
Static Load	ASTM F970	500 psi
Reaction to Fire	ASTM E648	Class 1
Specular Gloss	EN ISO 2813	13%
Wear Layer	Type 1, Grade 1	ASTM F1303/F410
Taber Abrasion	ASTM D3389	0.02 g (1000 cycles)
Stain Resistance	ASTM F925	Excellent
Moisture Tolerance with Multi-Poxy	ASTM F2170	98% RH
Vertical Deformation	PASSED	ASTM F2772
Surface Finish Effect	PASSED	ASTM F2772 (80 - 100)
Ball Rebound	PASSED	ASTM F2772 >90%
Force Reduction	PASSED	ASTM F2772 Class 2
Phthalate-free technology	—	YES
REACH Compliant	—	YES
Heavy Metals	—	NO
ISO 9001	—	YES
ISO 14001	—	YES

1. Color: As available from the indoor resilient athletic surfacing manufacturer's standard range.
2. Hardwood Design Series: High definition printing for a realistic wood surface appearance as available from the indoor resilient athletic surfacing manufacturer's standard range.
3. Texture: Texture to remain consistent between solid colors and wood design when blending colors.

C. Welding Rod: As supplied by the indoor resilient athletic surfacing manufacturer or supplier.
   1. Color to blend with the indoor resilient athletic surfacing color or design.
   2. All seams shall be welded to create a monolithic and impermeable surface.

D. Adhesive: As approved by the indoor resilient athletic surfacing manufacturer.

E. Game Line Paint and Primer: As approved by the indoor resilient athletic surfacing manufacturer.

PART 3 - EXECUTION

3.1 *EXAMINATION*

A. It is the responsibility of the general contractor/construction manager to ensure that project/site conditions are acceptable for the installation of the indoor resilient athletic flooring.
B. Verify that the area in which the indoor resilient athletic surfacing will be installed is dry and weather tight. Verify that permanent heat, light and ventilation are installed and operable.
C. Verify that all other work that could cause damage, dirt and dust or interrupt the normal pace of the indoor resilient athletic flooring installation is completed or suspended.
D. Verify that there is a stable room temperature of at least 65◦F.
E. Verify that there are no foreign materials or objects on the subfloor and that the subfloor is clean and ready for installation.
F. *Direct Full Spread Adhering to Concrete Subfloor Multi-Poxy : moisture content less than 98% RH when tested per ASTM F2170.*
G. Follow Fieldturf USA, Inc. installation recommendations.
H. Do not average the results of the tests. Report all field test results in writing to the General Contractor, Architect, and End User prior to installation.
I. Verify that the concrete subfloor surface pH level is within the 7 - 11 range.
J. Document the results confirming the slab is within manufacturer's tolerances for slab deviation.

3.2 *PREPARATION OF SURFACES*

A. Sand the entire surface of the concrete slab.
B. Sweep the concrete slab so as to remove all dirt and dust. If a sweeping compound is to be used it must be a sweeping compound that does not contain oil or other items that may inhibit the adhesive bond.
C. Slab must be dust free. In the event that dust impairs adhesive bond, priming the slab prior to application of adhesive may be necessary. Follow installation guidelines.
D. Follow OSHA guidelines.

3.3 *INSTALLATION*

A. The installation area shall be closed to all traffic and activity for a period to be set by the indoor resilient athletic surfacing installer. The indoor resilient athletic surfacing installation shall not begin until the installer is familiar with the existing conditions.
B. All necessary precautions should be taken to minimize noise, smell, dust, the use of hazardous materials and any other items that may inconvenience others.
C. Install the indoor resilient athletic surfacing in strict accordance with the indoor resilient athletic surfacing manufacturer's written instructions.
D. Install the indoor resilient athletic surfacing minimizing cross seams. Provide a seam diagram during the submittal process for approval prior to installation. Vinyl Sheet Flooring Seams: Comply with ASTM F 1516. Rout joints and heat weld to permanently and seamlessly fuse sections together.
E. Paint game lines using approved game line paint primer and game line paint in strict accordance with the game line paint manufacturer's instructions.
F. Install appropriate threshold plates or transition strips where necessary.

3.5 *CLEANING*

A. Remove all unused materials, tools, and equipment and dispose of any debris properly. Clean the indoor resilient athletic surfacing in accordance with the manufacturer's instructions.

3.6 *PROTECTION*

A. If required, protect the indoor resilient athletic surfacing from damage using coverings approved by the manufacturer until acceptance of work by the customer or their authorized representative.

3.7 *RELATED STANDARDS AND GUIDELINES*

A. ASTM F2170 "Standard Test Method for Determining Relative Humidity In Concrete Floor Slabs Using In-Situ Probes"
B. ASTM F710 "Standard Practice for Preparing Concrete Floors to Receive Resilient Flooring"
C. ACI 302.2R-06 "Guideline for Concrete Slabs that Receive Moisture-Sensitive Flooring Materials"
D. ASTM F2772-11 "Standard Specification for Athletic Performance Properties of Indoor Sports Floor Systems"

END OF SECTION

SECTION 09 65 66
ARCHITECTURAL SPECIFICATIONS FOR INDOOR RESILIENT ATHLETIC SURFACING

PART 1 – GENERAL

1.1 *SECTION INCLUDES*

A. Supply and installation of the indoor resilient multipurpose surfacing
B. Application of the game lines
C. References for the correct construction and preparation of concrete slabs to receive resilient flooring.

1.2 *SUBMITTALS*

A. Product Data:
   1. Manufacturer's promotional brochures, specifications and installation instructions
B. Manufacturer Certifications:
   1. Provide certification that accurately identifies the Original Equipment Manufacturer (OEM) of flooring furnished for this project including manufacturer's name, address and factory location.
   2. Suppliers of private label flooring for this project must identify themselves as such and fully disclose the OEM information listed above.
   3. All "manufacturer" requirements in these specifications must be complied with by the OEM, including warranties, certifications, qualifications, product data, test results, environmental requirements, performance data, etc.
C. Samples:
   1. Submit for selection and approval three (3) sets of the indoor resilient multipurpose surfacing, manufacturer's brochures, samples or sample boards of all of the available colors, textures and styles.
   2. Submit color samples of all the available game line paint colors for selection and approval.
D. Closeout Submittals:
   1. Submit three (3) copies of the indoor resilient multipurpose surfacing and manufacturer's maintenance instructions.
   2. Submit three (3) copies of the material and installation warranties as specified.

1.3 *QUALITY ASSURANCE*

A. Qualifications:
   1. The indoor resilient multipurpose surfacing shall have been actively marketed for a minimum of ten (10) years.
   2. The indoor resilient multipurpose surfacing shall be manufactured in an ISO 9001 certified plant.
   3. The indoor resilient multipurpose surfacing shall be manufactured in an ISO 14001 certified plant.
   4. The indoor resilient multipurpose surfacing supplier shall be an established firm, experienced in the field, and competent in the techniques required by the manufacturer.
   5. The installer of the indoor resilient multipurpose surfacing shall have a minimum of five (5) years of experience in the field installing indoor resilient multipurpose surfacing and have worked on at least five (5) projects of similar size, type and complexity.

B. Certifications:
   1. Installer to submit the indoor resilient athletic surfacing manufacturer's or distributor's certification attesting that they are an approved installer of the indoor resilient multipurpose surfacing.
   2. The ind**o**or resilient multipurpose surfacing manufacturer to submit official ISO 9001 certification for the facility in which the indoor resilient multipurpose surfacing is manufactured.

C. Testing:
   Tests shall be relative for multi-purpose use with certificates from independent testing resources to be made available upon request. Test results shall be performed according to ASTM standard testing procedures including ASTM F2772 "Standard Specification for Athletic Performance Properties of Indoor Sports Floor Systems".

1.4 *DELIVERY, STORAGE AND HANDLING*

A. Delivery:
   Material shall not be delivered until all related work is in place and finished and/or proper storage facilities and conditions can be provided and guaranteed stable according to FieldTurf USA, Inc. recommendations.

B. Storage:
   1. Store the material in a secure, clean and dry location.
   2. Maintain temperature between 55° and 85° Fahrenheit.
   3. Store the indoor resilient athletic surfacing rolls in an upright position on a smooth flat surface immediately upon delivery to jobsite.
   4. Rolls shipped in rigid protective cardboard containers can be laid horizontally prior to unpacking and installation.

1.5 *PROJECT/SITE CONDITIONS*

A. It is the responsibility of the general contractor/construction manager to maintain project/site conditions acceptable for the installation of the indoor resilient multipurpose flooring.

B. The area in which the indoor resilient multipurpose surfacing will be installed shall be dry and weather tight. Permanent heat, light and ventilation shall be installed and operable.

C. All other trades shall have completed their work prior to the installation of the resilient athletic flooring. The general contractor or construction manager shall maintain a secure and clean working environment before, during and after the installation.

D. Maintain a stable room temperature of at least 65°F for a minimum of one (1) week prior to, during and thereafter installation.

E. An effective low-permeance vapor barrier is placed directly beneath the concrete subfloor. For "on" or "below grade" installations, it is recommended to provide a permanent vapor barrier resistant to long term hydrostatic pressure/moisture exposure. Protrusions should be sealed to prevent moisture migration into the slab. Moisture should not be allowed to enter the slab after the completed construction.

F. Concrete subfloor surface pH level within the 7 to 10 range dependent upon installation type.

G. Concrete subfloor should be no greater than 1/8" within a 10 ft diameter. This tolerance can be measured in accordance with ASTM E1155. A specified (F_F) of 50 and an (F_L) of 30 should reach this degree of floor flatness and floor level. There is no numerical correlation between F numbers and the deviation from the straight

edge. However, the above specified numbers should achieve a flat floor with minimal deviation in the slab. Reference ACI 117 and ACI 302.1R. The general contractor should provide a certificate of compliance with the above recommendations.

H. Concrete subfloor must be clean and free of all foreign materials or objects including, but not limited to, curing compounds and sealers.

I. Fill cracks, grooves, voids, depressions, and other minor imperfections. Follow the manufacturer's directions. Moveable joints must be treated utilizing specific transitioning joint devices depending upon the architect's recommendations. Follow current ASTM F710 guidelines for the preparation of concrete slabs to receive resilient flooring.

J. Refer to ACI 302.2R "Guidelines for Concrete Slabs that Receive Moisture-Sensitive Flooring Materials" for concrete design and construction.

K. Concrete slab shall be fortified with continual steel reinforcement. Fiber reinforcement alone shall not be considered adequate fortification.

1.6 *WARRANTY*

A. Special Limited Warranty:
   1. Manufacturer's standard form in which manufacturer agrees to repair or replace sports flooring including labor that fails within specified warranty period.

B. Material warranty must be direct from the product manufacturer.
   1. Material warranties must come from original manufacturer or division thereof. Private label warranties from distributors or brokers are not valid. Supply original point of manufacturing upon request.

C. Failures include, but are not limited to, the following:
   1. Material manufacturing defects.
   2. Surface wear and deterioration to the point of wear-through of wear layer per ASTM F410/ASTM F1303.
   3. Failure due to substrate moisture exposure exceeding 98 percent relative humidity when tested according to ASTM F2170.

D. Warranty Period:
   1. <u>For material defects and surface wear-through:</u> **25** years from date of substantial completion.
   2. <u>For moisture vapor tolerance:</u> **25** years from date of substantial completion.

E. Installer's Limited Warranty:
   1. Installer's standard form in which installer agrees to repair or replace sports flooring that fails due to poor workmanship or faulty installation within the specified warranty period.
   2. Warranty Period: 2 years from date of substantial completion.

1.7 *ADDITIONAL MATERIALS*

A. Furnish to the owner additional materials containing a total of at least 1% of each different color or design of the indoor resilient athletic surfacing used on the project.

1.8 *LEED™ CERTIFICATION*

A. The indoor resilient athletic surfacing should be able to help this facility to achieve points towards *LEED™ certification.* Flooring system must be certified by FloorScore.
B. LEED categories positively affected by the indoor resilient athletic surfacing:

LEED™ V4 Credit		Contribution
Materials & Resources: Building Product Disclosure & Optimization (BPDO)		
MRc3: Sourcing of Raw Materials	Options 1 & 2	2 Points
MRc4: Material Ingredients	Option 1	1 Point
MRc5: Construction and Demolition Management	Reclamation and Recycling	ReStart® Program
Indoor Environmental Quality		
EQc2: Low-Emitting Materials	TVOC: 0.5 mg/m3 or less	FloorScore®

PART 2 - PRODUCTS

2.1 *MANUFACTURERS*

A. The basis of the design for the indoor resilient multipurpose surfacing is Omnisports Multi-Use as manufactured by Tarkett.
B. All other installation accessories and related components must be either made or approved by the indoor resilient athletic surfacing manufacturer.
C. Other products may be approved as equal if deemed qualified and submitted in accordance with the General Conditions.
D. Test reports confirming compliance from an independent sports laboratory must be provided along with samples, technical data, installation, maintenance, and warranty prior to acceptance as an alternative product.

2.2 *MATERIALS*

A. Omnisports Multi-Use - Prefabricated sport surface 6.2 mm (0.14″) with wood flooring design, single surface embossing and Extreme Three (3) Layers technology (X3LT) as supplied by Tarkett.
   1. Embossing of wood design and solid colors must be the same; varying embossing or surface textures will not be allowed.
   2. Printing of wood design shall closely resemble standard wood strip flooring in size, color, board length, and grain appearance.
   3. Surface embossing combined with TopClean XP must offer proper balance of surface friction per the ASTM F2772.
   4. Surface embossing combined with TopClean XP must provide resistance to stains and scratches. Surface profile must not incorporate linear embossing.
   5. The wood design shall be protected by a clear layer of pure PVC (Polyvinyl Chloride) and TopClean XP, a factory-applied UV cured urethane treatment.
   6. Extreme Three (3) Layers technology (X3LT) includes Omnisports XCS cushion, glass veil and calendared sheet must offer improved shock absorbing comfort while providing better indentation recovery

7. The XCS cushion force reduction layer shall be high-density closed cell PVC foam with honeycomb embossing, and is applied in one continuous manufacturing process.
8. Laminated or adhered foam layers will not be allowed.
9. Field constructed products will not be accepted.

A. Physical properties of the indoor resilient athletic surfacing shall conform to the following minimums:

Width	—	6′ 5″ (2 m)
Length	—	85′ (26 m) approx.
Wear Layer	—	2 mm
Total Thickness	—	6.2 mm
Wear Layer	Type 1– Grade 1	ASTM F1303/F410
Vertical Deformation	PASSED	ASTM F2772
Rolling Load	PASSED	≤0.50 mm (EN 1569 {11/1999})
Surface Finish Effect	PASSED	ASTM F2772 (80 – 110)
Chemical Resistance	Excellent	ASTM F925
Impact Resistance	PASSED	EN 1717
Abrasion Resistance	PASSED	0.10 (EN ISO 5470-1 {06/1999})
Static Load Limit	PASSED	ASTM F970- Load 175 Lbs
Sound Insulation	Excellent	+/= 19 dB (ISO 717/2)
In-Room Sound Insulation	Excellent	65dB (NF S31-074)
Ball Rebound	PASSED	ASTM F2772 > 90%
Force Reduction	PASSED	ASTM F2772 Class 2
Fire Rating	PASSED	ASTM E648 Class 1
Microbial Assays Test	No Growth	G21 ASTM - Backing
Asthma and Allergy Friendly™	ASP: 05-01/101	Certified Compliant
VOC	<10µg/m³	ASTM D5116 (small chamber)
Phthalate-free technology	—	YES
REACH Compliant	—	YES
Heavy Metals	—	NO
ISO 9001	—	YES
ISO 14001	—	YES

1. Color: As available from the indoor resilient athletic surfacing manufacturer's standard range.
2. Hardwood Design Series: High definition printing for a realistic wood surface appearance as available from the indoor resilient athletic surfacing manufacturer's standard range.
3. Texture: Texture to remain consistent between solid colors and wood design when blending colors.

C. Welding Rod: As supplied by the indoor resilient athletic surfacing manufacturer or supplier.
1. Color to blend with the indoor resilient athletic surfacing color or design.
2. All seams shall be welded to create a monolithic and impermeable surface.

D. Adhesive: As approved by the indoor resilient athletic surfacing manufacturer.
E. Game Line Paint and Primer: As approved by the indoor resilient athletic surfacing manufacturer.

PART 3 - EXECUTION

3.1 *EXAMINATION*

A. It is the responsibility of the general contractor/construction manager to ensure that project/site conditions are acceptable for the installation of the indoor resilient athletic flooring.
B. Verify that the area in which the indoor resilient athletic surfacing will be installed is dry and weather tight. Verify that permanent heat, light and ventilation are installed and operable.
C. Verify that all other work that could cause damage, dirt and dust or interrupt the normal pace of the indoor resilient athletic flooring installation is completed or suspended.
D. Verify that there is a stable room temperature of at least 65◦F.
E. Verify that there are no foreign materials or objects on the subfloor and that the subfloor is clean and ready for installation.
F. *For GreenLay™ Installation to Concrete Subfloor: moisture content less than 92% RH when tested per ASTM F2170.*
G. Follow Fieldturf USA, Inc. installation recommendations.
H. Do not average the results of the tests. Report all field test results in writing to the General Contractor, Architect, and End User prior to installation.
I. Verify that the concrete subfloor surface pH level is within the 7 - 10 range.
J. Document the results confirming the slab is within manufacturer's tolerances for slab deviation.

3.2 *PREPARATION OF SURFACES*

A. Sand the entire surface of the concrete slab.
B. Sweep the concrete slab so as to remove all dirt and dust. If a sweeping compound is to be used it must be a sweeping compound that does not contain oil or other items that may inhibit the adhesive bond.
C. Slab must be dust free. In the event that dust impairs adhesive bond, priming the slab prior to application of adhesive may be necessary. Follow installation guidelines.
D. Follow OSHA guidelines

3.3 *INSTALLATION*

A. The installation area shall be closed to all traffic and activity for a period to be set by the indoor resilient athletic surfacing installer. The indoor resilient athletic surfacing installation shall not begin until the installer is familiar with the existing conditions.
B. All necessary precautions should be taken to minimize noise, smell, dust, the use of hazardous materials and any other items that may inconvenience others.
C. Install the indoor resilient athletic surfacing in strict accordance with the indoor resilient athletic surfacing manufacturer's written instructions.
D. Install the indoor resilient athletic surfacing minimizing cross seams. Provide a seam diagram during the submittal process for approval prior to installation. Vinyl Sheet Flooring Seams: Comply with ASTM F 1516. Rout joints and heat weld to permanently and seamlessly fuse sections together.
E. Paint game lines using approved game line paint primer and game line paint in strict accordance with the game line paint manufacturer's instructions.
F. Install appropriate threshold plates or transition strips where necessary.

3.5 *CLEANING*

A. Remove all unused materials, tools, and equipment and dispose of any debris properly. Clean the indoor resilient athletic surfacing in accordance with the manufacturer's instructions.

3.6 *PROTECTION*

A. If required, protect the indoor resilient athletic surfacing from damage using coverings approved by the manufacturer until acceptance of work by the customer or their authorized representative.

3.7 *RELATED STANDARDS AND GUIDELINES*

A. ASTM F2170 "Standard Test Method for Determining Relative Humidity In Concrete Floor Slabs Using In-Situ Probes"
B. ASTM F710 "Standard Practice for Preparing Concrete Floors to Receive Resilient Flooring"
C. ACI 302.2R-06 "Guideline for Concrete Slabs that Receive Moisture-Sensitive Flooring Materials"
D. ASTM F2772-11 "Standard Specification for Athletic Performance Properties of Indoor Sports Floor Systems"

END OF SECTION

SECTION 09 65 66
ARCHITECTURAL SPECIFICATIONS FOR INDOOR RESILIENT ATHLETIC SURFACING

PART 1 – GENERAL

1.1 *SECTION INCLUDES*

A. Supply and installation of the indoor resilient multipurpose surfacing
B. Application of the game lines
C. References for the correct construction and preparation of concrete slabs to receive resilient flooring.

1.2 *SUBMITTALS*

A. Product Data:
   1. Manufacturer's promotional brochures, specifications and installation instructions
B. Manufacturer Certifications:
   1. Provide certification that accurately identifies the Original Equipment Manufacturer (OEM) of flooring furnished for this project including manufacturer's name, address and factory location.
   2. Suppliers of private label flooring for this project must identify themselves as such and fully disclose the OEM information listed above.
   3. All "manufacturer" requirements in these specifications must be complied with by the OEM, including warranties, certifications, qualifications, product data, test results, environmental requirements, performance data, etc.
C. Samples:
   1. Submit for selection and approval three (3) sets of the indoor resilient multipurpose surfacing, manufacturer's brochures, samples or sample boards of all of the available colors, textures and styles.
   2. Submit color samples of all the available game line paint colors for selection and approval.
D. Closeout Submittals:
   1. Submit three (3) copies of the indoor resilient multipurpose surfacing and manufacturer's maintenance instructions.
   2. Submit three (3) copies of the material and installation warranties as specified.

1.3 *QUALITY ASSURANCE*

A. Qualifications:
   1. The indoor resilient multipurpose surfacing shall have been actively marketed for a minimum of ten (10) years.
   2. The indoor resilient multipurpose surfacing shall be manufactured in an ISO 9001 certified plant.
   3. The indoor resilient multipurpose surfacing shall be manufactured in an ISO 14001 certified plant.
   4. The indoor resilient multipurpose surfacing supplier shall be an established firm, experienced in the field, and competent in the techniques required by the manufacturer.
   5. The installer of the indoor resilient multipurpose surfacing shall have a minimum of five (5) years of experience in the field installing indoor resilient multipurpose surfacing and have worked on at least five (5) projects of similar size, type and complexity.

B. Certifications:
   1. Installer to submit the indoor resilient athletic surfacing manufacturer's or distributor's certification attesting that they are an approved installer of the indoor resilient multipurpose surfacing.
   2. The ind**o**or resilient multipurpose surfacing manufacturer to submit official ISO 9001 certification for the facility in which the indoor resilient multipurpose surfacing is manufactured.

C. Testing:
   Tests shall be relative for multi-purpose use with certificates from independent testing resources to be made available upon request. Test results shall be performed according to ASTM standard testing procedures including ASTM F2772 "Standard Specification for Athletic Performance Properties of Indoor Sports Floor Systems".

1.4 *DELIVERY, STORAGE AND HANDLING*

A. Delivery:
   Material shall not be delivered until all related work is in place and finished and/or proper storage facilities and conditions can be provided and guaranteed stable according to FieldTurf USA, Inc. recommendations.

B. Storage:
   1. Store the material in a secure, clean and dry location.
   2. Maintain temperature between 55° and 85° Fahrenheit.
   3. Store the indoor resilient athletic surfacing rolls in an upright position on a smooth flat surface immediately upon delivery to jobsite.
   4. Rolls shipped in rigid protective cardboard containers can be laid horizontally prior to unpacking and installation.

1.5 *PROJECT/SITE CONDITIONS*

A. It is the responsibility of the general contractor/construction manager to maintain project/site conditions acceptable for the installation of the indoor resilient multipurpose flooring.

B. The area in which the indoor resilient multipurpose surfacing will be installed shall be dry and weather tight. Permanent heat, light and ventilation shall be installed and operable.

C. All other trades shall have completed their work prior to the installation of the resilient athletic flooring. The general contractor or construction manager shall maintain a secure and clean working environment before, during and after the installation.

D. Maintain a stable room temperature of at least 65°F for a minimum of one (1) week prior to, during and thereafter installation.

E. An effective low-permeance vapor barrier is placed directly beneath the concrete subfloor. For "on" or "below grade" installations, it is recommended to provide a permanent vapor barrier resistant to long term hydrostatic pressure/moisture exposure. Protrusions should be sealed to prevent moisture migration into the slab. Moisture should not be allowed to enter the slab after the completed construction.

F. Concrete subfloor surface pH level within the 7 to 10 range dependent upon installation type.

G. Concrete subfloor should be no greater than 1/8" within a 10 ft diameter. This tolerance can be measured in accordance with ASTM E1155. A specified (F_F) of 50 and an (F_L) of 30 should reach this degree of floor flatness and floor level. There is no numerical correlation between F numbers and the deviation from the straight

edge. However, the above specified numbers should achieve a flat floor with minimal deviation in the slab. Reference ACI 117 and ACI 302.1R. The general contractor should provide a certificate of compliance with the above recommendations.

H. Concrete subfloor must be clean and free of all foreign materials or objects including, but not limited to, curing compounds and sealers.

I. Fill cracks, grooves, voids, depressions, and other minor imperfections. Follow the manufacturer's directions. Moveable joints must be treated utilizing specific transitioning joint devices depending upon the architect's recommendations. Follow current ASTM F710 guidelines for the preparation of concrete slabs to receive resilient flooring.

J. Refer to ACI 302.2R "Guidelines for Concrete Slabs that Receive Moisture-Sensitive Flooring Materials" for concrete design and construction.

K. Concrete slab shall be fortified with continual steel reinforcement. Fiber reinforcement alone shall not be considered adequate fortification.

1.6 *WARRANTY*

A. Special Limited Warranty:
   1. Manufacturer's standard form in which manufacturer agrees to repair or replace sports flooring including labor that fails within specified warranty period.

B. Material warranty must be direct from the product manufacturer.
   1. Material warranties must come from original manufacturer or division thereof. Private label warranties from distributors or brokers are not valid. Supply original point of manufacturing upon request.

C. Failures include, but are not limited to, the following:
   1. Material manufacturing defects.
   2. Surface wear and deterioration to the point of wear-through of wear layer per ASTM F410/ASTM F1303.
   3. Failure due to substrate moisture exposure exceeding 98 percent relative humidity when tested according to ASTM F2170.

D. Warranty Period:
   1. <u>For material defects and surface wear-through:</u> **25** years from date of substantial completion.
   2. <u>For moisture vapor tolerance:</u> **25** years from date of substantial completion.

E. Installer's Limited Warranty:
   1. Installer's standard form in which installer agrees to repair or replace sports flooring that fails due to poor workmanship or faulty installation within the specified warranty period.
   2. Warranty Period: 2 years from date of substantial completion.

1.7 *ADDITIONAL MATERIALS*

A. Furnish to the owner additional materials containing a total of at least 1% of each different color or design of the indoor resilient athletic surfacing used on the project.

1.8 *LEED™ CERTIFICATION*

A. The indoor resilient athletic surfacing should be able to help this facility to achieve points towards *LEED™ certification.* Flooring system must be certified by FloorScore.
B. LEED categories positively affected by the indoor resilient athletic surfacing:

LEED™ V4 Credit		Contribution
Materials & Resources: Building Product Disclosure & Optimization (BPDO)		
MRc3: Sourcing of Raw Materials	Options 1 & 2	2 Points
MRc4: Material Ingredients	Option 1	1 Point
MRc5: Construction and Demolition Management	Reclamation and Recycling	ReStart® Program
Indoor Environmental Quality		
EQc2: Low-Emitting Materials	TVOC: 0.5 mg/m3 or less	FloorScore®

PART 2 - PRODUCTS

2.1 *MANUFACTURERS*

A. The basis of the design for the indoor resilient multipurpose surfacing is Omnisports Multi-Use as manufactured by Tarkett.
B. All other installation accessories and related components must be either made or approved by the indoor resilient athletic surfacing manufacturer.
C. Other products may be approved as equal if deemed qualified and submitted in accordance with the General Conditions.
D. Test reports confirming compliance from an independent sports laboratory must be provided along with samples, technical data, installation, maintenance, and warranty prior to acceptance as an alternative product.

2.2 *MATERIALS*

A. Omnisports Multi-Use - Prefabricated sport surface 6.2 mm (0.14″) with wood flooring design, single surface embossing and Extreme Three (3) Layers technology (X3LT) as supplied by Tarkett.
   1. Embossing of wood design and solid colors must be the same; varying embossing or surface textures will not be allowed.
   2. Printing of wood design shall closely resemble standard wood strip flooring in size, color, board length, and grain appearance.
   3. Surface embossing combined with TopClean XP must offer proper balance of surface friction per the ASTM F2772.
   4. Surface embossing combined with TopClean XP must provide resistance to stains and scratches. Surface profile must not incorporate linear embossing.
   5. The wood design shall be protected by a clear layer of pure PVC (Polyvinyl Chloride) and TopClean XP, a factory-applied UV cured urethane treatment.
   6. Extreme Three (3) Layers technology (X3LT) includes Omnisports XCS cushion, glass veil and calendared sheet must offer improved shock absorbing comfort while providing better indentation recovery

7. The XCS cushion force reduction layer shall be high-density closed cell PVC foam with honeycomb embossing, and is applied in one continuous manufacturing process.
8. Laminated or adhered foam layers will not be allowed.
9. Field constructed products will not be accepted.

A. Physical properties of the indoor resilient athletic surfacing shall conform to the following minimums:

Width	—	6′ 6″ (2 m)
Length	—	85′ (25.9m) approx.
Wear Layer	—	2 mm
Total Thickness	—	6.2 mm
Wear Layer	Type 1– Grade 1	ASTM F1303/F410
Vertical Deformation	PASSED	ASTM F2772
Rolling Load	PASSED	≤0.50 mm (EN 1569 {11/1999})
Surface Finish Effect	PASSED	ASTM F2772 (80 – 110)
Chemical Resistance	Excellent	ASTM F925
Impact Resistance	PASSED	EN 1717
Abrasion Resistance	PASSED	0.10 (EN ISO 5470-1 {06/1999})
Static Load Limit	PASSED	ASTM F970- Load 175 Lbs
Sound Insulation	Excellent	+/= 19 dB (ISO 717/2)
In-Room Sound Insulation	Excellent	65dB (NF S31-074)
Ball Rebound	PASSED	ASTM F2772 > 90%
Force Reduction	PASSED	ASTM F2772 Class 2
Fire Rating	PASSED	ASTM E648 Class 1
Microbial Assays Test	No Growth	G21 ASTM - Backing
Asthma and Allergy Friendly™	ASP: 05-01/101	Certified Compliant
VOC	<10µg/m³	ASTM D5116 (small chamber)
Phthalate-free technology	—	YES
REACH Compliant	—	YES
Heavy Metals	—	NO
ISO 9001	—	YES
ISO 14001	—	YES

1. Color: As available from the indoor resilient athletic surfacing manufacturer's standard range.
2. Hardwood Design Series: High definition printing for a realistic wood surface appearance as available from the indoor resilient athletic surfacing manufacturer's standard range.
3. Texture: Texture to remain consistent between solid colors and wood design when blending colors.

C. Welding Rod: As supplied by the indoor resilient athletic surfacing manufacturer or supplier.
   1. Color to blend with the indoor resilient athletic surfacing color or design.
   2. All seams shall be welded to create a monolithic and impermeable surface.

D. Adhesive: As approved by the indoor resilient athletic surfacing manufacturer.

E. Game Line Paint and Primer: As approved by the indoor resilient athletic surfacing manufacturer.

PART 3 - EXECUTION

3.1 *EXAMINATION*

A. It is the responsibility of the general contractor/construction manager to ensure that project/site conditions are acceptable for the installation of the indoor resilient athletic flooring.
B. Verify that the area in which the indoor resilient athletic surfacing will be installed is dry and weather tight. Verify that permanent heat, light and ventilation are installed and operable.
C. Verify that all other work that could cause damage, dirt and dust or interrupt the normal pace of the indoor resilient athletic flooring installation is completed or suspended.
D. Verify that there is a stable room temperature of at least 65◦F.
E. Verify that there are no foreign materials or objects on the subfloor and that the subfloor is clean and ready for installation.
F. *Direct Full Spread Adhering to Concrete Subfloor HS Sports Spray : moisture content less than 90% RH when tested per ASTM F2170.*
G. Follow Fieldturf USA, Inc installation recommendations.
H. Do not average the results of the tests. Report all field test results in writing to the General Contractor, Architect, and End User prior to installation.
I. Verify that the concrete subfloor surface pH level is within the 7 - 10 range.
J. Document the results indicating the slab is within manufacturer's tolerances for slab deviation.

3.2 *PREPARATION OF SURFACES*

A. Sand the entire surface of the concrete slab.
B. Sweep the concrete slab so as to remove all dirt and dust. If a sweeping compound is to be used it must be a sweeping compound that does not contain oil or other items that may inhibit the adhesive bond.
C. Slab must be dust free. In the event that dust impairs adhesive bond, priming the slab prior to application of adhesive may be necessary. Follow installation guidelines.

3.3 *INSTALLATION*

A. The installation area shall be closed to all traffic and activity for a period to be set by the indoor resilient athletic surfacing installer. The indoor resilient athletic surfacing installation shall not begin until the installer is familiar with the existing conditions.
B. All necessary precautions should be taken to minimize noise, smell, dust, the use of hazardous materials and any other items that may inconvenience others.
C. Install the indoor resilient athletic surfacing in strict accordance with the indoor resilient athletic surfacing manufacturer's written instructions.
D. Install the indoor resilient athletic surfacing minimizing cross seams. Provide a seam diagram during the submittal process for approval prior to installation. Vinyl Sheet Flooring Seams: Comply with ASTM F 1516. Rout joints and heat weld to permanently and seamlessly fuse sections together. Apply transitions at doorways as needed.
E. Paint game lines using approved game line paint primer and game line paint in strict accordance with the game line paint manufacturer's instructions.
F. Install appropriate threshold plates or transition strips where necessary.

3.5 *CLEANING*

A. Remove all unused materials, tools, and equipment and dispose of any debris properly. Clean the indoor resilient athletic surfacing in accordance with the manufacturer's instructions.

3.6 *PROTECTION*

A. If required, protect the indoor resilient athletic surfacing from damage using coverings approved by the manufacturer until acceptance of work by the customer or their authorized representative.

3.7 *RELATED STANDARDS AND GUIDELINES*

A. ASTM F2170 "Standard Test Method for Determining Relative Humidity In Concrete Floor Slabs Using In-Situ Probes"
B. ASTM F710 "Standard Practice for Preparing Concrete Floors to Receive Resilient Flooring"
C. ACI 302.2R-06 "Guideline for Concrete Slabs that Receive Moisture-Sensitive Flooring Materials"
D. ASTM F2772-11 "Standard Specification for Athletic Performance Properties of Indoor Sports Floor Systems"

END OF SECTION

SECTION 09 65 66
ARCHITECTURAL SPECIFICATIONS FOR INDOOR RESILIENT ATHLETIC SURFACING

PART 1 – GENERAL

1.1 *SECTION INCLUDES*

A. Supply and installation of the indoor resilient multipurpose surfacing
B. Application of the game lines
C. References for the correct construction and preparation of concrete slabs to receive resilient flooring.

1.2 *SUBMITTALS*

A. Product Data:
   1. Manufacturer's promotional brochures, specifications and installation instructions
B. Manufacturer Certifications:
   1. Provide certification that accurately identifies the Original Equipment Manufacturer (OEM) of flooring furnished for this project including manufacturer's name, address and factory location.
   2. Suppliers of private label flooring for this project must identify themselves as such and fully disclose the OEM information listed above.
   3. All "manufacturer" requirements in these specifications must be complied with by the OEM, including warranties, certifications, qualifications, product data, test results, environmental requirements, performance data, etc.
C. Samples:
   1. Submit for selection and approval three (3) sets of the indoor resilient multipurpose surfacing, manufacturer's brochures, samples or sample boards of all of the available colors, textures and styles.
   2. Submit color samples of all the available game line paint colors for selection and approval.
D. Closeout Submittals:
   1. Submit three (3) copies of the indoor resilient multipurpose surfacing and manufacturer's maintenance instructions.
   2. Submit three (3) copies of the material and installation warranties as specified.

1.3 *QUALITY ASSURANCE*

A. Qualifications:
   1. The indoor resilient multipurpose surfacing shall have been actively marketed for a minimum of ten (10) years.
   2. The indoor resilient multipurpose surfacing shall be manufactured in an ISO 9001 certified plant.
   3. The indoor resilient multipurpose surfacing shall be manufactured in an ISO 14001 certified plant.
   4. The indoor resilient multipurpose surfacing supplier shall be an established firm, experienced in the field, and competent in the techniques required by the manufacturer.
   5. The installer of the indoor resilient multipurpose surfacing shall have a minimum of five (5) years of experience in the field installing indoor resilient multipurpose surfacing and have worked on at least five (5) projects of similar size, type and complexity.

B. Certifications:
   1. Installer to submit the indoor resilient athletic surfacing manufacturer's or distributor's certification attesting that they are an approved installer of the indoor resilient multipurpose surfacing.
   2. The ind**o**or resilient multipurpose surfacing manufacturer to submit official ISO 9001 certification for the facility in which the indoor resilient multipurpose surfacing is manufactured.

C. Testing:
   Tests shall be relative for multi-purpose use with certificates from independent testing resources to be made available upon request. Test results shall be performed according to ASTM standard testing procedures including ASTM F2772 "Standard Specification for Athletic Performance Properties of Indoor Sports Floor Systems".

1.4 *DELIVERY, STORAGE AND HANDLING*

A. Delivery:
   Material shall not be delivered until all related work is in place and finished and/or proper storage facilities and conditions can be provided and guaranteed stable according to FieldTurf USA, Inc. recommendations.

B. Storage:
   1. Store the material in a secure, clean and dry location.
   2. Maintain temperature between 55° and 85° Fahrenheit.
   3. Store the indoor resilient athletic surfacing rolls in an upright position on a smooth flat surface immediately upon delivery to jobsite.
   4. Rolls shipped in rigid protective cardboard containers can be laid horizontally prior to unpacking and installation.

1.5 *PROJECT/SITE CONDITIONS*

A. It is the responsibility of the general contractor/construction manager to maintain project/site conditions acceptable for the installation of the indoor resilient multipurpose flooring.

B. The area in which the indoor resilient multipurpose surfacing will be installed shall be dry and weather tight. Permanent heat, light and ventilation shall be installed and operable.

C. All other trades shall have completed their work prior to the installation of the resilient athletic flooring. The general contractor or construction manager shall maintain a secure and clean working environment before, during and after the installation.

D. Maintain a stable room temperature of at least 65°F for a minimum of one (1) week prior to, during and thereafter installation.

E. An effective low-permeance vapor barrier is placed directly beneath the concrete subfloor. For "on" or "below grade" installations, it is recommended to provide a permanent vapor barrier resistant to long term hydrostatic pressure/moisture exposure. Protrusions should be sealed to prevent moisture migration into the slab. Moisture should not be allowed to enter the slab after the completed construction.

F. Concrete subfloor surface pH level within the 7 to 11 range dependent upon installation type.

G. Concrete subfloor should be no greater than 1/8" within a 10 ft diameter. This tolerance can be measured in accordance with ASTM E1155. A specified (F_F) of 50 and an (F_L) of 30 should reach this degree of floor flatness and floor level. There is no numerical correlation between F numbers and the deviation from the straight

edge. However, the above specified numbers should achieve a flat floor with minimal deviation in the slab. Reference ACI 117 and ACI 302.1R. The general contractor should provide a certificate of compliance with the above recommendations.

H. Concrete subfloor must be clean and free of all foreign materials or objects including, but not limited to, curing compounds and sealers.

I. Fill cracks, grooves, voids, depressions, and other minor imperfections. Follow the manufacturer's directions. Moveable joints must be treated utilizing specific transitioning joint devices depending upon the architect's recommendations. Follow current ASTM F710 guidelines for the preparation of concrete slabs to receive resilient flooring.

J. Refer to ACI 302.2R "Guidelines for Concrete Slabs that Receive Moisture-Sensitive Flooring Materials" for concrete design and construction.

K. Concrete slab shall be fortified with continual steel reinforcement. Fiber reinforcement alone shall not be considered adequate fortification.

1.6 *WARRANTY*

A. Special Limited Warranty:
   1. Manufacturer's standard form in which manufacturer agrees to repair or replace sports flooring including labor that fails within specified warranty period.

B. Material warranty must be direct from the product manufacturer.
   1. Material warranties must come from original manufacturer or division thereof. Private label warranties from distributors or brokers are not valid. Supply original point of manufacturing upon request.

C. Failures include, but are not limited to, the following:
   1. Material manufacturing defects.
   2. Surface wear and deterioration to the point of wear-through of wear layer per ASTM F410/ASTM F1303.
   3. Failure due to substrate moisture exposure exceeding 98 percent relative humidity when tested according to ASTM F2170.

D. Warranty Period:
   1. <u>For material defects and surface wear-through:</u> **25** years from date of substantial completion.
   2. <u>For moisture vapor tolerance:</u> **25** years from date of substantial completion.

E. Installer's Limited Warranty:
   1. Installer's standard form in which installer agrees to repair or replace sports flooring that fails due to poor workmanship or faulty installation within the specified warranty period.
   2. Warranty Period: 2 years from date of substantial completion.

1.7 *ADDITIONAL MATERIALS*

A. Furnish to the owner additional materials containing a total of at least 1% of each different color or design of the indoor resilient athletic surfacing used on the project.

1.8 *LEED™ CERTIFICATION*

A. The indoor resilient athletic surfacing should be able to help this facility to achieve points towards *LEED™ certification.* Flooring system must be certified by FloorScore.
B. LEED categories positively affected by the indoor resilient athletic surfacing:

LEED™ V4 Credit		Contribution
Materials & Resources: Building Product Disclosure & Optimization (BPDO)		
MRc3: Sourcing of Raw Materials	Options 1 & 2	2 Points
MRc4: Material Ingredients	Option 1	1 Point
MRc5: Construction and Demolition Management	Reclamation and Recycling	ReStart® Program
Indoor Environmental Quality		
EQc2: Low-Emitting Materials	TVOC: 0.5 mg/m3 or less	FloorScore®

PART 2 - PRODUCTS

2.1 *MANUFACTURERS*

A. The basis of the design for the indoor resilient multipurpose surfacing is Omnisports Multi-Use as manufactured by Tarkett.
B. All other installation accessories and related components must be either made or approved by the indoor resilient athletic surfacing manufacturer.
C. Other products may be approved as equal if deemed qualified and submitted in accordance with the General Conditions.
D. Test reports confirming compliance from an independent sports laboratory must be provided along with samples, technical data, installation, maintenance, and warranty prior to acceptance as an alternative product.

2.2 *MATERIALS*

A. Omnisports Multi-Use - Prefabricated sport surface 6.2 mm (0.14″) with wood flooring design, single surface embossing and Extreme Three (3) Layers technology (X3LT) as supplied by Tarkett.
   1. Embossing of wood design and solid colors must be the same; varying embossing or surface textures will not be allowed.
   2. Printing of wood design shall closely resemble standard wood strip flooring in size, color, board length, and grain appearance.
   3. Surface embossing combined with TopClean XP must offer proper balance of surface friction per the ASTM F2772.
   4. Surface embossing combined with TopClean XP must provide resistance to stains and scratches. Surface profile must not incorporate linear embossing.
   5. The wood design shall be protected by a clear layer of pure PVC (Polyvinyl Chloride) and TopClean XP, a factory-applied UV cured urethane treatment.
   6. Extreme Three (3) Layers technology (X3LT) includes Omnisports XCS cushion, glass veil and calendared sheet must offer improved shock absorbing comfort while providing better indentation recovery

7. The XCS cushion force reduction layer shall be high-density closed cell PVC foam with honeycomb embossing, and is applied in one continuous manufacturing process.
8. Laminated or adhered foam layers will not be allowed.
9. Field constructed products will not be accepted.

A. Physical properties of the indoor resilient athletic surfacing shall conform to the following minimums:

Width	—	6′ 6″ (2 m)
Length	—	85′ (25.9m) approx.
Wear Layer	—	2 mm
Total Thickness	—	6.2 mm
Wear Layer	Type 1– Grade 1	ASTM F1303/F410
Vertical Deformation	PASSED	ASTM F2772
Rolling Load	PASSED	≤0.50 mm (EN 1569 {11/1999})
Surface Finish Effect	PASSED	ASTM F2772 (80 – 110)
Chemical Resistance	Excellent	ASTM F925
Impact Resistance	PASSED	EN 1717
Abrasion Resistance	PASSED	0.10 (EN ISO 5470-1 {06/1999})
Static Load Limit	PASSED	ASTM F970- Load 175 Lbs
Sound Insulation	Excellent	+/= 19 dB (ISO 717/2)
In-Room Sound Insulation	Excellent	65dB (NF S31-074)
Ball Rebound	PASSED	ASTM F2772 > 90%
Force Reduction	PASSED	ASTM F2772 Class 2
Fire Rating	PASSED	ASTM E648 Class 1
Microbial Assays Test	No Growth	G21 ASTM - Backing
Asthma and Allergy Friendly™	ASP: 05-01/101	Certified Compliant
VOC	<10µg/m³	ASTM D5116 (small chamber)
Phthalate-free technology	—	YES
REACH Compliant	—	YES
Heavy Metals	—	NO
ISO 9001	—	YES
ISO 14001	—	YES

1. Color: As available from the indoor resilient athletic surfacing manufacturer's standard range.
2. Hardwood Design Series: High definition printing for a realistic wood surface appearance as available from the indoor resilient athletic surfacing manufacturer's standard range.
3. Texture: Texture to remain consistent between solid colors and wood design when blending colors.

C. Welding Rod: As supplied by the indoor resilient athletic surfacing manufacturer or supplier.
   1. Color to blend with the indoor resilient athletic surfacing color or design.
   2. All seams shall be welded to create a monolithic and impermeable surface.

D. Adhesive: As approved by the indoor resilient athletic surfacing manufacturer.

E. Game Line Paint and Primer: As approved by the indoor resilient athletic surfacing manufacturer.

PART 3 - EXECUTION

3.1 *EXAMINATION*

A. It is the responsibility of the general contractor/construction manager to ensure that project/site conditions are acceptable for the installation of the indoor resilient athletic flooring.
B. Verify that the area in which the indoor resilient athletic surfacing will be installed is dry and weather tight. Verify that permanent heat, light and ventilation are installed and operable.
C. Verify that all other work that could cause damage, dirt and dust or interrupt the normal pace of the indoor resilient athletic flooring installation is completed or suspended.
D. Verify that there is a stable room temperature of at least 65◦F.
E. Verify that there are no foreign materials or objects on the subfloor and that the subfloor is clean and ready for installation.
F. *Direct Full Spread Adhering to Concrete Subfloor Multi-Poxy : moisture content less than 98% RH when tested per ASTM F2170.*
G. Follow Fieldturf USA, Inc. installation recommendations.
H. Do not average the results of the tests. Report all field test results in writing to the General Contractor, Architect, and End User prior to installation.
I. Verify that the concrete subfloor surface pH level is within the 7 - 11 range.
J. Document the results confirming the slab is within manufacturer's tolerances for slab deviation.

3.2 *PREPARATION OF SURFACES*

A. Sand the entire surface of the concrete slab.
B. Sweep the concrete slab so as to remove all dirt and dust. If a sweeping compound is to be used it must be a sweeping compound that does not contain oil or other items that may inhibit the adhesive bond.
C. Slab must be dust free. In the event that dust impairs adhesive bond, priming the slab prior to application of adhesive may be necessary. Follow installation guidelines.
D. Follow OSHA guidelines.

3.3 *INSTALLATION*

A. The installation area shall be closed to all traffic and activity for a period to be set by the indoor resilient athletic surfacing installer. The indoor resilient athletic surfacing installation shall not begin until the installer is familiar with the existing conditions.
B. All necessary precautions should be taken to minimize noise, smell, dust, the use of hazardous materials and any other items that may inconvenience others.
C. Install the indoor resilient athletic surfacing in strict accordance with the indoor resilient athletic surfacing manufacturer's written instructions.
D. Install the indoor resilient athletic surfacing minimizing cross seams. Provide a seam diagram during the submittal process for approval prior to installation. Vinyl Sheet Flooring Seams: Comply with ASTM F 1516. Rout joints and heat weld to permanently and seamlessly fuse sections together.
E. Paint game lines using approved game line paint primer and game line paint in strict accordance with the game line paint manufacturer's instructions.
F. Install appropriate threshold plates or transition strips where necessary.

3.5 *CLEANING*

A. Remove all unused materials, tools, and equipment and dispose of any debris properly. Clean the indoor resilient athletic surfacing in accordance with the manufacturer's instructions.

3.6 *PROTECTION*

A. If required, protect the indoor resilient athletic surfacing from damage using coverings approved by the manufacturer until acceptance of work by the customer or their authorized representative.

3.7 *RELATED STANDARDS AND GUIDELINES*

A. ASTM F2170 "Standard Test Method for Determining Relative Humidity In Concrete Floor Slabs Using In-Situ Probes"
B. ASTM F710 "Standard Practice for Preparing Concrete Floors to Receive Resilient Flooring"
C. ACI 302.2R-06 "Guideline for Concrete Slabs that Receive Moisture-Sensitive Flooring Materials"
D. ASTM F2772-11 "Standard Specification for Athletic Performance Properties of Indoor Sports Floor Systems"

END OF SECTION

SECTION 09 65 66
ARCHITECTURAL SPECIFICATIONS FOR INDOOR RESILIENT ATHLETIC SURFACING

PART 1 – GENERAL

1.1 *SECTION INCLUDES*

A. Supply and installation of the indoor resilient multipurpose surfacing
B. Application of the game lines
C. References for the correct construction and preparation of concrete slabs to receive resilient flooring.

1.2 *SUBMITTALS*

A. Product Data:
   1. Manufacturer's promotional brochures, specifications and installation instructions
B. Manufacturer Certifications:
   1. Provide certification that accurately identifies the Original Equipment Manufacturer (OEM) of flooring furnished for this project including manufacturer's name, address and factory location.
   2. Suppliers of private label flooring for this project must identify themselves as such and fully disclose the OEM information listed above.
   3. All "manufacturer" requirements in these specifications must be complied with by the OEM, including warranties, certifications, qualifications, product data, test results, environmental requirements, performance data, etc.
C. Samples:
   1. Submit for selection and approval three (3) sets of the indoor resilient multipurpose surfacing, manufacturer's brochures, samples or sample boards of all of the available colors, textures and styles.
   2. Submit color samples of all the available game line paint colors for selection and approval.
D. Closeout Submittals:
   1. Submit three (3) copies of the indoor resilient multipurpose surfacing and manufacturer's maintenance instructions.
   2. Submit three (3) copies of the material and installation warranties as specified.

1.3 *QUALITY ASSURANCE*

A. Qualifications:
   1. The indoor resilient multipurpose surfacing shall have been actively marketed for a minimum of ten (10) years.
   2. The indoor resilient multipurpose surfacing shall be manufactured in an ISO 9001 certified plant.
   3. The indoor resilient multipurpose surfacing shall be manufactured in an ISO 14001 certified plant.
   4. The indoor resilient multipurpose surfacing supplier shall be an established firm, experienced in the field, and competent in the techniques required by the manufacturer.
   5. The installer of the indoor resilient multipurpose surfacing shall have a minimum of five (5) years of experience in the field installing indoor resilient multipurpose surfacing and have worked on at least five (5) projects of similar size, type and complexity.

B. Certifications:
   1. Installer to submit the indoor resilient athletic surfacing manufacturer's or distributor's certification attesting that they are an approved installer of the indoor resilient multipurpose surfacing.
   2. The ind**o**or resilient multipurpose surfacing manufacturer to submit official ISO 9001 certification for the facility in which the indoor resilient multipurpose surfacing is manufactured.

C. Testing:
   Tests shall be relative for multi-purpose use with certificates from independent testing resources to be made available upon request. Test results shall be performed according to ASTM standard testing procedures including ASTM F2772 "Standard Specification for Athletic Performance Properties of Indoor Sports Floor Systems".

1.4 *DELIVERY, STORAGE AND HANDLING*

A. Delivery:
   Material shall not be delivered until all related work is in place and finished and/or proper storage facilities and conditions can be provided and guaranteed stable according to FieldTurf USA, Inc. recommendations.

B. Storage:
   1. Store the material in a secure, clean and dry location.
   2. Maintain temperature between 55° and 85° Fahrenheit.
   3. Store the indoor resilient athletic surfacing rolls in an upright position on a smooth flat surface immediately upon delivery to jobsite.
   4. Rolls shipped in rigid protective cardboard containers can be laid horizontally prior to unpacking and installation.

1.5 *PROJECT/SITE CONDITIONS*

A. It is the responsibility of the general contractor/construction manager to maintain project/site conditions acceptable for the installation of the indoor resilient multipurpose flooring.

B. The area in which the indoor resilient multipurpose surfacing will be installed shall be dry and weather tight. Permanent heat, light and ventilation shall be installed and operable.

C. All other trades shall have completed their work prior to the installation of the resilient athletic flooring. The general contractor or construction manager shall maintain a secure and clean working environment before, during and after the installation.

D. Maintain a stable room temperature of at least 65°F for a minimum of one (1) week prior to, during and thereafter installation.

E. An effective low-permeance vapor barrier is placed directly beneath the concrete subfloor. For "on" or "below grade" installations, it is recommended to provide a permanent vapor barrier resistant to long term hydrostatic pressure/moisture exposure. Protrusions should be sealed to prevent moisture migration into the slab. Moisture should not be allowed to enter the slab after the completed construction.

F. Concrete subfloor surface pH level within the 7 to 11 range dependent upon installation type.

G. Concrete subfloor should be no greater than 1/8" within a 10 ft diameter. This tolerance can be measured in accordance with ASTM E1155. A specified (F_F) of 50 and an (F_L) of 30 should reach this degree of floor flatness and floor level. There is no numerical correlation between F numbers and the deviation from the straight

edge. However, the above specified numbers should achieve a flat floor with minimal deviation in the slab. Reference ACI 117 and ACI 302.1R. The general contractor should provide a certificate of compliance with the above recommendations.

H. Concrete subfloor must be clean and free of all foreign materials or objects including, but not limited to, curing compounds and sealers.

I. Fill cracks, grooves, voids, depressions, and other minor imperfections. Follow the manufacturer's directions. Moveable joints must be treated utilizing specific transitioning joint devices depending upon the architect's recommendations. Follow current ASTM F710 guidelines for the preparation of concrete slabs to receive resilient flooring.

J. Refer to ACI 302.2R "Guidelines for Concrete Slabs that Receive Moisture-Sensitive Flooring Materials" for concrete design and construction.

K. Concrete slab shall be fortified with continual steel reinforcement. Fiber reinforcement alone shall not be considered adequate fortification.

1.6 *WARRANTY*

A. Special Limited Warranty:
   1. Manufacturer's standard form in which manufacturer agrees to repair or replace sports flooring including labor that fails within specified warranty period.

B. Material warranty must be direct from the product manufacturer.
   1. Material warranties must come from original manufacturer or division thereof. Private label warranties from distributors or brokers are not valid. Supply original point of manufacturing upon request.

C. Failures include, but are not limited to, the following:
   1. Material manufacturing defects.
   2. Surface wear and deterioration to the point of wear-through of wear layer per ASTM F410/ASTM F1303.
   3. Failure due to substrate moisture exposure exceeding 98 percent relative humidity when tested according to ASTM F2170.

D. Warranty Period:
   1. <u>For material defects and surface wear-through:</u> **25** years from date of substantial completion.
   2. <u>For moisture vapor tolerance:</u> **25** years from date of substantial completion.

E. Installer's Limited Warranty:
   1. Installer's standard form in which installer agrees to repair or replace sports flooring that fails due to poor workmanship or faulty installation within the specified warranty period.
   2. Warranty Period: 2 years from date of substantial completion.

1.7 *ADDITIONAL MATERIALS*

A. Furnish to the owner additional materials containing a total of at least 1% of each different color or design of the indoor resilient athletic surfacing used on the project.

1.8 *LEED™ CERTIFICATION*

A. The indoor resilient athletic surfacing should be able to help this facility to achieve points towards *LEED™ certification.* Flooring system must be certified by FloorScore.
B. LEED categories positively affected by the indoor resilient athletic surfacing:

LEED™ V4 Credit		Contribution
Materials & Resources: Building Product Disclosure & Optimization (BPDO)		
MRc3: Sourcing of Raw Materials	Options 1 & 2	2 Points
MRc4: Material Ingredients	Option 1	1 Point
MRc5: Construction and Demolition Management	Reclamation and Recycling	ReStart® Program
Indoor Environmental Quality		
EQc2: Low-Emitting Materials	TVOC: 0.5 mg/m3 or less	FloorScore®

PART 2 - PRODUCTS

2.1 *MANUFACTURERS*

A. The basis of the design for the indoor resilient multipurpose surfacing is Omnisports Multi-Use as manufactured by Tarkett.
B. All other installation accessories and related components must be either made or approved by the indoor resilient athletic surfacing manufacturer.
C. Other products may be approved as equal if deemed qualified and submitted in accordance with the General Conditions.
D. Test reports confirming compliance from an independent sports laboratory must be provided along with samples, technical data, installation, maintenance, and warranty prior to acceptance as an alternative product.

2.2 *MATERIALS*

A. Omnisports Multi-Use - Prefabricated sport surface 6.2 mm (0.22″) with wood flooring design and slightly textured embossed surface as supplied by Tarkett.
   1. Embossing of wood design and solid colors must be the same; varying embossing or surface textures will not be allowed.
   2. Printing of wood design shall closely resemble standard wood strip flooring in size, color, board length, and grain appearance.
   3. Surface embossing combined with TopClean XP must offer proper balance of surface friction per the ASTM F2772.
   4. Surface embossing combined with TopClean XP must provide resistance to stains and scratches. Surface profile must not incorporate linear embossing.
   5. The wood design shall be protected by a clear layer of pure PVC (Polyvinyl Chloride) and TopClean XP, a factory-applied UV cured urethane treatment.
   6. Extreme Three (3) Layers technology (X3LT) includes Omnisports XCS cushion, glass veil and calendared sheet must offer improved shock absorbing comfort while providing better indentation recovery
   7. The XCS cushion force reduction layer shall be high-density closed cell PVC foam with honeycomb embossing, and is applied in one continuous manufacturing process.

8. Laminated or adhered foam layers will not be allowed.
9. Field constructed products will not be accepted.

B. Physical properties of the indoor resilient athletic surfacing shall conform to the following minimums:

Width	—	6′ 6″ (2 m)
Length	—	85′ (25.9m) approx.
Wear Layer	—	2 mm
Total Thickness	—	6.2 mm
Wear Layer	Type 1– Grade 1	ASTM F1303/F410
Vertical Deformation	PASSED	ASTM F2772
Rolling Load	PASSED	0.30 (EN 1569 {11/1999})
Surface Finish Effect	PASSED	ASTM F2772 (80 – 110)
Chemical Resistance	Excellent	ASTM F925
Impact Resistance	PASSED	EN 1517
Abrasion Resistance	PASSED	0.10 (EN ISO 5470-1 {06/1999})
Static Load Limit	PASSED	ASTM F970- Load 175 Lbs
Sound Insulation	Excellent	+/= 19 dB (ISO 717/2)
In-Room Sound Insulation	Excellent	61dB (NF S31-074)
Ball Rebound	PASSED	ASTM F2772 > 90%
Force Reduction	PASSED	ASTM F2772 Class 2
Fire Rating	PASSED	ASTM E648 Class 1
Microbial Assays Test	No Growth	G21 ASTM - Backing
Phthalate-free technology	—	YES
REACH Compliant	—	YES
Heavy Metals	—	NO
ISO 9001	—	YES
ISO 14001	—	YES

1. Color: As available from the indoor resilient athletic surfacing manufacturer's standard range.
2. Hardwood Design Series: A wood look design as available from the indoor resilient athletic surfacing manufacturer's standard range.
3. Texture: Texture to remain consistent between solid colors and wood design when blending colors.

C. Welding Rod: As supplied by the indoor resilient athletic surfacing manufacturer or supplier.
   1. Color to blend with the indoor resilient athletic surfacing color or design.
   2. All seams shall be welded to create a monolithic and impermeable surface.

D. Adhesive: As approved by the indoor resilient athletic surfacing manufacturer.

E. Game Line Paint and Primer: As approved by the indoor resilient athletic surfacing manufacturer.

PART 3 - EXECUTION

3.1 *EXAMINATION*

A. It is the responsibility of the general contractor/construction manager to ensure that project/site conditions are acceptable for the installation of the indoor resilient athletic flooring.
B. Verify that the area in which the indoor resilient athletic surfacing will be installed is dry and weather tight. Verify that permanent heat, light and ventilation are installed and operable.
C. Verify that all other work that could cause damage, dirt and dust or interrupt the normal pace of the indoor resilient athletic flooring installation is completed or suspended.
D. Verify that there is a stable room temperature of at least 65◦F.
E. Verify that there are no foreign materials or objects on the subfloor and that the subfloor is clean and ready for installation.
F. *Direct Full Spread Adhering to Concrete Subfloor Multi-Set : moisture content less than 83% RH when tested per ASTM F2170.*
G. Follow Fieldturf USA, Inc. installation recommendations.
H. Do not average the results of the tests. Report all field test results in writing to the General Contractor, Architect, and End User prior to installation.
I. Verify that the concrete subfloor surface pH level is within the 7 - 11 range.
J. Document the results confirming the slab is within manufacturer's tolerances for slab deviation.

3.2 *PREPARATION OF SURFACES*

A. Sand the entire surface of the concrete slab.
B. Sweep the concrete slab so as to remove all dirt and dust. If a sweeping compound is to be used it must be a sweeping compound that does not contain oil or other items that may inhibit the adhesive bond.
C. Slab must be dust free. In the event that dust impairs adhesive bond, priming the slab prior to application of adhesive may be necessary. Follow installation guidelines.
D. Follow OSHA guidelines.

3.3 *INSTALLATION*

A. The installation area shall be closed to all traffic and activity for a period to be set by the indoor resilient athletic surfacing installer. The indoor resilient athletic surfacing installation shall not begin until the installer is familiar with the existing conditions.
B. All necessary precautions should be taken to minimize noise, smell, dust, the use of hazardous materials and any other items that may inconvenience others.
C. Install the indoor resilient athletic surfacing in strict accordance with the indoor resilient athletic surfacing manufacturer's written instructions.
D. Install the indoor resilient athletic surfacing minimizing cross seams. Provide a seam diagram during the submittal process for approval prior to installation. Vinyl Sheet Flooring Seams: Comply with ASTM F 1516. Rout joints and heat weld to permanently and seamlessly fuse sections together.
E. Paint game lines using approved game line paint primer and game line paint in strict accordance with the game line paint manufacturer's instructions.
F. Install appropriate threshold plates or transition strips where necessary.

3.5 *CLEANING*

A. Remove all unused materials, tools, and equipment and dispose of any debris properly. Clean the indoor resilient athletic surfacing in accordance with the manufacturer's instructions.

3.6 *PROTECTION*

A. If required, protect the indoor resilient athletic surfacing from damage using coverings approved by the manufacturer until acceptance of work by the customer or their authorized representative.

3.7 *RELATED STANDARDS AND GUIDELINES*

A. ASTM F2170 "Standard Test Method for Determining Relative Humidity In Concrete Floor Slabs Using In-Situ Probes"
B. ASTM F710 "Standard Practice for Preparing Concrete Floors to Receive Resilient Flooring"
C. ACI 302.2R-06 "Guideline for Concrete Slabs that Receive Moisture-Sensitive Flooring Materials"
D. ASTM F2772-11 "Standard Specification for Athletic Performance Properties of Indoor Sports Floor Systems"

END OF SECTION

SECTION 09 65 66
ARCHITECTURAL SPECIFICATIONS FOR INDOOR RESILIENT ATHLETIC SURFACING

PART 1 – GENERAL

1.1 *SECTION INCLUDES*

A. Supply and installation of the indoor resilient multipurpose surfacing
B. Application of the game lines
C. References for the correct construction and preparation of concrete slabs to receive resilient flooring.

1.2 *SUBMITTALS*

A. Product Data:
   1. Manufacturer's promotional brochures, specifications and installation instructions
B. Manufacturer Certifications:
   1. Provide certification that accurately identifies the Original Equipment Manufacturer (OEM) of flooring furnished for this project including manufacturer's name, address and factory location.
   2. Suppliers of private label flooring for this project must identify themselves as such and fully disclose the OEM information listed above.
   3. All "manufacturer" requirements in these specifications must be complied with by the OEM, including warranties, certifications, qualifications, product data, test results, environmental requirements, performance data, etc.
C. Samples:
   1. Submit for selection and approval three (3) sets of the indoor resilient multipurpose surfacing, manufacturer's brochures, samples or sample boards of all of the available colors, textures and styles.
   2. Submit color samples of all the available game line paint colors for selection and approval.
D. Closeout Submittals:
   1. Submit three (3) copies of the indoor resilient multipurpose surfacing and manufacturer's maintenance instructions.
   2. Submit three (3) copies of the material and installation warranties as specified.

1.3 *QUALITY ASSURANCE*

A. Qualifications:
   1. The indoor resilient multipurpose surfacing shall have been actively marketed for a minimum of ten (10) years.
   2. The indoor resilient multipurpose surfacing shall be manufactured in an ISO 9001 certified plant.
   3. The indoor resilient multipurpose surfacing shall be manufactured in an ISO 14001 certified plant.
   4. The indoor resilient multipurpose surfacing supplier shall be an established firm, experienced in the field, and competent in the techniques required by the manufacturer.
   5. The installer of the indoor resilient multipurpose surfacing shall have a minimum of five (5) years of experience in the field installing indoor resilient multipurpose surfacing and have worked on at least five (5) projects of similar size, type and complexity.

B. Certifications:
   1. Installer to submit the indoor resilient athletic surfacing manufacturer's or distributor's certification attesting that they are an approved installer of the indoor resilient multipurpose surfacing.
   2. The ind**o**or resilient multipurpose surfacing manufacturer to submit official ISO 9001 certification for the facility in which the indoor resilient multipurpose surfacing is manufactured.

C. Testing:
   Tests shall be relative for multi-purpose use with certificates from independent testing resources to be made available upon request. Test results shall be performed according to ASTM standard testing procedures including ASTM F2772 "Standard Specification for Athletic Performance Properties of Indoor Sports Floor Systems".

1.4 *DELIVERY, STORAGE AND HANDLING*

A. Delivery:
   Material shall not be delivered until all related work is in place and finished and/or proper storage facilities and conditions can be provided and guaranteed stable according to FieldTurf USA, Inc. recommendations.

B. Storage:
   1. Store the material in a secure, clean and dry location.
   2. Maintain temperature between 55° and 85° Fahrenheit.
   3. Store the indoor resilient athletic surfacing rolls in an upright position on a smooth flat surface immediately upon delivery to jobsite.
   4. Rolls shipped in rigid protective cardboard containers can be laid horizontally prior to unpacking and installation.

1.5 *PROJECT/SITE CONDITIONS*

A. It is the responsibility of the general contractor/construction manager to maintain project/site conditions acceptable for the installation of the indoor resilient multipurpose flooring.

B. The area in which the indoor resilient multipurpose surfacing will be installed shall be dry and weather tight. Permanent heat, light and ventilation shall be installed and operable.

C. All other trades shall have completed their work prior to the installation of the resilient athletic flooring. The general contractor or construction manager shall maintain a secure and clean working environment before, during and after the installation.

D. Maintain a stable room temperature of at least 65°F for a minimum of one (1) week prior to, during and thereafter installation.

E. An effective low-permeance vapor barrier is placed directly beneath the concrete subfloor. For "on" or "below grade" installations, it is recommended to provide a permanent vapor barrier resistant to long term hydrostatic pressure/moisture exposure. Protrusions should be sealed to prevent moisture migration into the slab. Moisture should not be allowed to enter the slab after the completed construction.

F. Concrete subfloor surface pH level within the 7 to 11 range dependent upon installation type.

G. Concrete subfloor should be no greater than 1/8" within a 10 ft diameter. This tolerance can be measured in accordance with ASTM E1155. A specified (F_F) of 50 and an (F_L) of 30 should reach this degree of floor flatness and floor level. There is no numerical correlation between F numbers and the deviation from the straight

edge. However, the above specified numbers should achieve a flat floor with minimal deviation in the slab. Reference ACI 117 and ACI 302.1R. The general contractor should provide a certificate of compliance with the above recommendations.

H. Concrete subfloor must be clean and free of all foreign materials or objects including, but not limited to, curing compounds and sealers.

I. Fill cracks, grooves, voids, depressions, and other minor imperfections. Follow the manufacturer's directions. Moveable joints must be treated utilizing specific transitioning joint devices depending upon the architect's recommendations. Follow current ASTM F710 guidelines for the preparation of concrete slabs to receive resilient flooring.

J. Refer to ACI 302.2R "Guidelines for Concrete Slabs that Receive Moisture-Sensitive Flooring Materials" for concrete design and construction.

K. Concrete slab shall be fortified with continual steel reinforcement. Fiber reinforcement alone shall not be considered adequate fortification.

1.6 *WARRANTY*

A. Special Limited Warranty:
   1. Manufacturer's standard form in which manufacturer agrees to repair or replace sports flooring including labor that fails within specified warranty period.

B. Material warranty must be direct from the product manufacturer.
   1. Material warranties must come from original manufacturer or division thereof. Private label warranties from distributors or brokers are not valid. Supply original point of manufacturing upon request.

C. Failures include, but are not limited to, the following:
   1. Material manufacturing defects.
   2. Surface wear and deterioration to the point of wear-through of wear layer per ASTM F410/ASTM F1303.
   3. Failure due to substrate moisture exposure exceeding 98 percent relative humidity when tested according to ASTM F2170.

D. Warranty Period:
   1. <u>For material defects and surface wear-through:</u> **25** years from date of substantial completion.
   2. <u>For moisture vapor tolerance:</u> **25** years from date of substantial completion.

E. Installer's Limited Warranty:
   1. Installer's standard form in which installer agrees to repair or replace sports flooring that fails due to poor workmanship or faulty installation within the specified warranty period.
   2. Warranty Period: 2 years from date of substantial completion.

1.7 *ADDITIONAL MATERIALS*

A. Furnish to the owner additional materials containing a total of at least 1% of each different color or design of the indoor resilient athletic surfacing used on the project.

1.8 *LEED™ CERTIFICATION*

A. The indoor resilient athletic surfacing should be able to help this facility to achieve points towards *LEED™ certification.* Flooring system must be certified by FloorScore.
B. LEED categories positively affected by the indoor resilient athletic surfacing:

LEED™ V4 Credit		Contribution
Materials & Resources: Building Product Disclosure & Optimization (BPDO)		
MRc3: Sourcing of Raw Materials	Options 1 & 2	2 Points
MRc4: Material Ingredients	Option 1	1 Point
MRc5: Construction and Demolition Management	Reclamation and Recycling	ReStart® Program
Indoor Environmental Quality		
EQc2: Low-Emitting Materials	TVOC: 0.5 mg/m3 or less	FloorScore®

PART 2 - PRODUCTS

2.1 *MANUFACTURERS*

A. The basis of the design for the indoor resilient multipurpose surfacing is Omnisports Multi-Use as manufactured by Tarkett.
B. All other installation accessories and related components must be either made or approved by the indoor resilient athletic surfacing manufacturer.
C. Other products may be approved as equal if deemed qualified and submitted in accordance with the General Conditions.
D. Test reports confirming compliance from an independent sports laboratory must be provided along with samples, technical data, installation, maintenance, and warranty prior to acceptance as an alternative product.

2.2 *MATERIALS*

A. Omnisports Multi-Use - Prefabricated sport surface 6.2 mm (0.14″) with wood flooring design, single surface embossing and Extreme Three (3) Layers technology (X3LT) as supplied by Tarkett.
   1. Embossing of wood design and solid colors must be the same; varying embossing or surface textures will not be allowed.
   2. Printing of wood design shall closely resemble standard wood strip flooring in size, color, board length, and grain appearance.
   3. Surface embossing combined with TopClean XP must offer proper balance of surface friction per the ASTM F2772.
   4. Surface embossing combined with TopClean XP must provide resistance to stains and scratches. Surface profile must not incorporate linear embossing.
   5. The wood design shall be protected by a clear layer of pure PVC (Polyvinyl Chloride) and TopClean XP, a factory-applied UV cured urethane treatment.
   6. Extreme Three (3) Layers technology (X3LT) includes Omnisports XCS cushion, glass veil and calendared sheet must offer improved shock absorbing comfort while providing better indentation recovery

7. The XCS cushion force reduction layer shall be high-density closed cell PVC foam with honeycomb embossing, and is applied in one continuous manufacturing process.
8. Laminated or adhered foam layers will not be allowed.
9. Field constructed products will not be accepted.

A. Physical properties of the indoor resilient athletic surfacing shall conform to the following minimums:

Width	—	6′ 6″ (2 m)
Length	—	85′ (25.9m) approx.
Wear Layer	—	2 mm
Total Thickness	—	6.2 mm
Wear Layer	Type 1– Grade 1	ASTM F1303/F410
Vertical Deformation	PASSED	ASTM F2772
Rolling Load	PASSED	≤0.50 mm (EN 1569 {11/1999})
Surface Finish Effect	PASSED	ASTM F2772 (80 – 110)
Chemical Resistance	Excellent	ASTM F925
Impact Resistance	PASSED	EN 1717
Abrasion Resistance	PASSED	0.10 (EN ISO 5470-1 {06/1999})
Static Load Limit	PASSED	ASTM F970- Load 175 Lbs
Sound Insulation	Excellent	+/= 19 dB (ISO 717/2)
In-Room Sound Insulation	Excellent	65dB (NF S31-074)
Ball Rebound	PASSED	ASTM F2772 > 90%
Force Reduction	PASSED	ASTM F2772 Class 2
Fire Rating	PASSED	ASTM E648 Class 1
Microbial Assays Test	No Growth	G21 ASTM - Backing
Asthma and Allergy Friendly™	ASP: 05-01/101	Certified Compliant
VOC	<10µg/m³	ASTM D5116 (small chamber)
Phthalate-free technology	—	YES
REACH Compliant	—	YES
Heavy Metals	—	NO
ISO 9001	—	YES
ISO 14001	—	YES

1. Color: As available from the indoor resilient athletic surfacing manufacturer's standard range.
2. Hardwood Design Series: High definition printing for a realistic wood surface appearance as available from the indoor resilient athletic surfacing manufacturer's standard range.
3. Texture: Texture to remain consistent between solid colors and wood design when blending colors.

C. Tarkolay – A high quality low permeance slip sheet vapor retarder designed to separate the installed system from the substrate below.
1. Tarkolay as manufactured by Tarkett can be used below, on, or above grade substrates that experience elevated moisture conditions.
2. Moisture tolerances shall have no limitation per ASTM F2170. Physical properties of the indoor resilient athletic surfacing shall conform to the following minimums:

Width	—	6′ 6″ (2 m)
Length	—	147′7‴ (45 m) approx.
Total Thickness	—	1.3 mm
Dimensional Stability	PASSED	.01% (EN 1434)

Permeance	Excellent	<0.20 (ASTM E96

D. Welding Rod: As supplied by the indoor resilient athletic surfacing manufacturer or supplier.
   1. Color to blend with the indoor resilient athletic surfacing color or design.
   2. All seams shall be welded to create a monolithic and impermeable surface.
E. Adhesive: As approved by the indoor resilient athletic surfacing manufacturer.
F. Game Line Paint and Primer: As approved by the indoor resilient athletic surfacing manufacturer.

PART 3 - EXECUTION

3.1 *EXAMINATION*

A. It is the responsibility of the general contractor/construction manager to ensure that project/site conditions are acceptable for the installation of the indoor resilient athletic flooring.
B. Verify that the area in which the indoor resilient athletic surfacing will be installed is dry and weather tight. Verify that permanent heat, light and ventilation are installed and operable.
C. Verify that all other work that could cause damage, dirt and dust or interrupt the normal pace of the indoor resilient athletic flooring installation is completed or suspended.
D. Verify that there is a stable room temperature of at least 65◦F.
E. Verify that there are no foreign materials or objects on the subfloor and that the subfloor is clean and ready for installation.
F. *Installation with Tarkolay to Concrete Subfloor : moisture content no limitation when tested per ASTM F2170.*
G. Follow Fieldturf USA, Inc. installation recommendations.
H. Do not average the results of the tests. Report all field test results in writing to the General Contractor, Architect, and End User prior to installation.
I. Verify that the concrete subfloor surface pH level is within the 7 - 11 range.
J. Document the results confirming the slab is within manufacturer's tolerances for slab deviation.

3.2 *PREPARATION OF SURFACES*

A. Sand the entire surface of the concrete slab.
B. Sweep the concrete slab so as to remove all dirt and dust. If a sweeping compound is to be used it must be a sweeping compound that does not contain oil or other items that may inhibit the adhesive bond.
C. Slab must be dust free. In the event that dust impairs adhesive bond, priming the slab prior to application of adhesive may be necessary. Follow installation guidelines.
D. Follow OSHA guidelines.

3.3 *INSTALLATION*

A. The installation area shall be closed to all traffic and activity for a period to be set by the indoor resilient athletic surfacing installer. The indoor resilient athletic surfacing installation shall not begin until the installer is familiar with the existing conditions.
B. All necessary precautions should be taken to minimize noise, smell, dust, the use of hazardous materials and any other items that may inconvenience others.
C. Install the indoor resilient athletic surfacing in strict accordance with the indoor resilient athletic surfacing manufacturer's written instructions.
D. Install the indoor resilient athletic surfacing minimizing cross seams. Provide a seam diagram during the submittal process for approval prior to installation. Vinyl Sheet Flooring Seams: Comply with ASTM F 1516. Rout joints and heat weld to permanently and seamlessly fuse sections together.
E. Paint game lines using approved game line paint primer and game line paint in strict accordance with the game line paint manufacturer's instructions.
F. Install appropriate threshold plates or transition strips where necessary.

3.5 *CLEANING*

A. Remove all unused materials, tools, and equipment and dispose of any debris properly. Clean the indoor resilient athletic surfacing in accordance with the manufacturer's instructions.

3.6 *PROTECTION*

A. If required, protect the indoor resilient athletic surfacing from damage using coverings approved by the manufacturer until acceptance of work by the customer or their authorized representative.

3.7 *RELATED STANDARDS AND GUIDELINES*

A. ASTM F2170 "Standard Test Method for Determining Relative Humidity In Concrete Floor Slabs Using In-Situ Probes"
B. ASTM F710 "Standard Practice for Preparing Concrete Floors to Receive Resilient Flooring"
C. ACI 302.2R-06 "Guideline for Concrete Slabs that Receive Moisture-Sensitive Flooring Materials"
D. ASTM F2772-11 "Standard Specification for Athletic Performance Properties of Indoor Sports Floor Systems"

END OF SECTION

SECTION 09 65 66
ARCHITECTURAL SPECIFICATIONS FOR INDOOR RESILIENT ATHLETIC SURFACING

PART 1 – GENERAL

1.1 *SECTION INCLUDES*

A. Supply and installation of the indoor resilient multipurpose surfacing
B. Application of the game lines
C. References for the correct construction and preparation of concrete slabs to receive resilient flooring.

1.2 *SUBMITTALS*

A. Product Data:
   1. Manufacturer's promotional brochures, specifications and installation instructions
B. Manufacturer Certifications:
   1. Provide certification that accurately identifies the Original Equipment Manufacturer (OEM) of flooring furnished for this project including manufacturer's name, address and factory location.
   2. Suppliers of private label flooring for this project must identify themselves as such and fully disclose the OEM information listed above.
   3. All "manufacturer" requirements in these specifications must be complied with by the OEM, including warranties, certifications, qualifications, product data, test results, environmental requirements, performance data, etc.
C. Samples:
   1. Submit for selection and approval three (3) sets of the indoor resilient multipurpose surfacing, manufacturer's brochures, samples or sample boards of all of the available colors, textures and styles.
   2. Submit color samples of all the available game line paint colors for selection and approval.
D. Closeout Submittals:
   1. Submit three (3) copies of the indoor resilient multipurpose surfacing and manufacturer's maintenance instructions.
   2. Submit three (3) copies of the material and installation warranties as specified.

1.3 *QUALITY ASSURANCE*

A. Qualifications:
   1. The indoor resilient multipurpose surfacing shall have been actively marketed for a minimum of ten (10) years.
   2. The indoor resilient multipurpose surfacing shall be manufactured in an ISO 9001 certified plant.
   3. The indoor resilient multipurpose surfacing shall be manufactured in an ISO 14001 certified plant.
   4. The indoor resilient multipurpose surfacing supplier shall be an established firm, experienced in the field, and competent in the techniques required by the manufacturer.
   5. The installer of the indoor resilient multipurpose surfacing shall have a minimum of five (5) years of experience in the field installing indoor resilient multipurpose surfacing and have worked on at least five (5) projects of similar size, type and complexity.

B. Certifications:
   1. Installer to submit the indoor resilient athletic surfacing manufacturer's or distributor's certification attesting that they are an approved installer of the indoor resilient multipurpose surfacing.
   2. The ind**o**or resilient multipurpose surfacing manufacturer to submit official ISO 9001 certification for the facility in which the indoor resilient multipurpose surfacing is manufactured.

C. Testing:
   Tests shall be relative for multi-purpose use with certificates from independent testing resources to be made available upon request. Test results shall be performed according to ASTM standard testing procedures including ASTM F2772 "Standard Specification for Athletic Performance Properties of Indoor Sports Floor Systems".

1.4 *DELIVERY, STORAGE AND HANDLING*

A. Delivery:
   Material shall not be delivered until all related work is in place and finished and/or proper storage facilities and conditions can be provided and guaranteed stable according to FieldTurf USA, Inc. recommendations.

B. Storage:
   1. Store the material in a secure, clean and dry location.
   2. Maintain temperature between 55° and 85° Fahrenheit.
   3. Store the indoor resilient athletic surfacing rolls in an upright position on a smooth flat surface immediately upon delivery to jobsite.
   4. Rolls shipped in rigid protective cardboard containers can be laid horizontally prior to unpacking and installation.

1.5 *PROJECT/SITE CONDITIONS*

A. It is the responsibility of the general contractor/construction manager to maintain project/site conditions acceptable for the installation of the indoor resilient multipurpose flooring.

B. The area in which the indoor resilient multipurpose surfacing will be installed shall be dry and weather tight. Permanent heat, light and ventilation shall be installed and operable.

C. All other trades shall have completed their work prior to the installation of the resilient athletic flooring. The general contractor or construction manager shall maintain a secure and clean working environment before, during and after the installation.

D. Maintain a stable room temperature of at least 65°F for a minimum of one (1) week prior to, during and thereafter installation.

E. An effective low-permeance vapor barrier is placed directly beneath the concrete subfloor. For "on" or "below grade" installations, it is recommended to provide a permanent vapor barrier resistant to long term hydrostatic pressure/moisture exposure. Protrusions should be sealed to prevent moisture migration into the slab. Moisture should not be allowed to enter the slab after the completed construction.

F. Concrete subfloor surface pH level within the 7 to 10 range dependent upon installation type.

G. Concrete subfloor should be no greater than 1/8" within a 10 ft diameter. This tolerance can be measured in accordance with ASTM E1155. A specified (F_F) of 50 and an (F_L) of 30 should reach this degree of floor flatness and floor level. There is no numerical correlation between F numbers and the deviation from the straight

edge. However, the above specified numbers should achieve a flat floor with minimal deviation in the slab. Reference ACI 117 and ACI 302.1R. The general contractor should provide a certificate of compliance with the above recommendations.

H. Concrete subfloor must be clean and free of all foreign materials or objects including, but not limited to, curing compounds and sealers.

I. Fill cracks, grooves, voids, depressions, and other minor imperfections. Follow the manufacturer's directions. Moveable joints must be treated utilizing specific transitioning joint devices depending upon the architect's recommendations. Follow current ASTM F710 guidelines for the preparation of concrete slabs to receive resilient flooring.

J. Refer to ACI 302.2R "Guidelines for Concrete Slabs that Receive Moisture-Sensitive Flooring Materials" for concrete design and construction.

K. Concrete slab shall be fortified with continual steel reinforcement. Fiber reinforcement alone shall not be considered adequate fortification.

1.6 *WARRANTY*

A. Special Limited Warranty:
   1. Manufacturer's standard form in which manufacturer agrees to repair or replace sports flooring including labor that fails within specified warranty period.

B. Material warranty must be direct from the product manufacturer.
   1. Material warranties must come from original manufacturer or division thereof. Private label warranties from distributors or brokers are not valid. Supply original point of manufacturing upon request.

C. Failures include, but are not limited to, the following:
   1. Material manufacturing defects.
   2. Surface wear and deterioration to the point of wear-through of wear layer per ASTM F410/ASTM F1303.
   3. Failure due to substrate moisture exposure exceeding 98 percent relative humidity when tested according to ASTM F2170.

D. Warranty Period:
   1. For material defects and surface wear-through: **25** years from date of substantial completion.
   2. For moisture vapor tolerance: **25** years from date of substantial completion.

E. Installer's Limited Warranty:
   1. Installer's standard form in which installer agrees to repair or replace sports flooring that fails due to poor workmanship or faulty installation within the specified warranty period.
   2. Warranty Period: 2 years from date of substantial completion.

1.7 *ADDITIONAL MATERIALS*

A. Furnish to the owner additional materials containing a total of at least 1% of each different color or design of the indoor resilient athletic surfacing used on the project.

1.8 *LEED™ CERTIFICATION*

A. The indoor resilient athletic surfacing should be able to help this facility to achieve points towards *LEED™ certification.* Flooring system must be certified by FloorScore.
B. LEED categories positively affected by the indoor resilient athletic surfacing:

LEED™ V4 Credit		Contribution
Materials & Resources: Building Product Disclosure & Optimization (BPDO)		
MRc3: Sourcing of Raw Materials	Options 1 & 2	2 Points
MRc4: Material Ingredients	Option 1	1 Point
MRc5: Construction and Demolition Management	Reclamation and Recycling	ReStart® Program
Indoor Environmental Quality		
EQc2: Low-Emitting Materials	TVOC: 0.5 mg/m3 or less	FloorScore®

PART 2 - PRODUCTS

2.1 *MANUFACTURERS*

A. The basis of the design for the indoor resilient multipurpose surfacing is Omnisports PurePlay as manufactured by Tarkett.
B. All other installation accessories and related components must be either made or approved by the indoor resilient athletic surfacing manufacturer.
C. Other products may be approved as equal if deemed qualified and submitted in accordance with the General Conditions.
D. Test reports confirming compliance from an independent sports laboratory must be provided along with samples, technical data, installation, maintenance, and warranty prior to acceptance as an alternative product.

2.2 *MATERIALS*

A. Omnisports PurePlay - Prefabricated sport surface 9.4 mm (3/8”) with wood flooring design and slightly textured embossed surface as supplied by Tarkett.
   1. Embossing of wood design and solid colors must be the same; varying embossing or surface textures will not be allowed.
   2. Printing of wood design shall closely resemble standard wood strip flooring in size, color, board length, and grain appearance.
   3. The wood design shall be protected by a clear layer of pure PVC (Polyvinyl Chloride) and TopClean xp, a factory-applied UV cured urethane treatment.
   4. Intermediate layers shall be fortified with a non-woven fiberglass grid for increased dimensional stability.
   5. The foam force reduction layer shall be high-density closed cell PVC foam with honeycomb embossing, and is applied in one continuous manufacturing process.
   6. Laminated or adhered foam layers will not be allowed.
   7. Field constructed products will not be accepted.

B. Physical properties of the indoor resilient athletic surfacing shall conform to the following minimums:

Width	—	6’ 6” (2 m)
Length	—	85’ (25.9m) approx.
Wear Layer	—	2 mm
Total Thickness	—	9.4 mm
Wear Layer	Type 1– Grade 1	ASTM F1303/F410
Vertical Deformation	PASSED	ASTM F2772
Rolling Load	PASSED	0.30 (EN 1569 {11/1999})
Surface Finish Effect	PASSED	ASTM F2772 (80 – 110)
Chemical Resistance	Excellent	ASTM F925
Impact Resistance	PASSED	EN 1517
Abrasion Resistance	PASSED	0.10 (EN ISO 5470-1 {06/1999})
Static Load Limit	PASSED	ASTM F970- Load 175 Lbs
Sound Insulation	Excellent	+/= 19 dB (ISO 717/2)
In-Room Sound Insulation	Excellent	61dB (NF S31-074)
Ball Rebound	PASSED	ASTM F2772 > 90%
Force Reduction	PASSED	ASTM F2772 Class 3
Fire Rating	PASSED	ASTM E648 Class 1
Microbial Assays Test	No Growth	G21 ASTM - Backing
Asthma and Allergy Friendly™	ASP: 05-01/101	Certified Compliant
Phthalate-free technology	—	YES
REACH Compliant	—	YES
Heavy Metals	—	NO
ISO 9001	—	YES
ISO 14001	—	YES

1. Color: As available from the indoor resilient athletic surfacing manufacturer’s standard range.
2. Hardwood Design Series: High definition printing for a realistic wood surface appearance as available from the indoor resilient athletic surfacing manufacturer’s standard range.
3. Texture: Texture to remain consistent between solid colors and wood design when blending colors.

C. Welding Rod: As supplied by the indoor resilient athletic surfacing manufacturer or supplier.
   1. Color to blend with the indoor resilient athletic surfacing color or design.
   2. All seams shall be welded to create a monolithic and impermeable surface.

D. Adhesive: As approved by the indoor resilient athletic surfacing manufacturer.

E. Game Line Paint and Primer: As approved by the indoor resilient athletic surfacing manufacturer.

PART 3 - EXECUTION

3.1 *EXAMINATION*

A. It is the responsibility of the general contractor/construction manager to ensure that project/site conditions are acceptable for the installation of the indoor resilient athletic flooring.
B. Verify that the area in which the indoor resilient athletic surfacing will be installed is dry and weather tight. Verify that permanent heat, light and ventilation are installed and operable.
C. Verify that all other work that could cause damage, dirt and dust or interrupt the normal pace of the indoor resilient athletic flooring installation is completed or suspended.
D. Verify that there is a stable room temperature of at least 65◦F.
E. Verify that there are no foreign materials or objects on the subfloor and that the subfloor is clean and ready for installation.
F. *For GreenLay™ Installation to Concrete Subfloor: moisture content less than 92% RH when tested per ASTM F2170.*
G. Follow Fieldturf USA, Inc. installation recommendations.
H. Do not average the results of the tests. Report all field test results in writing to the General Contractor, Architect, and End User prior to installation.
I. Verify that the concrete subfloor surface pH level is within the 7 - 10 range.
J. Document the results confirming the slab is within manufacturer's tolerances for slab deviation.

3.2 *PREPARATION OF SURFACES*

A. Sand the entire surface of the concrete slab.
B. Sweep the concrete slab so as to remove all dirt and dust. If a sweeping compound is to be used it must be a sweeping compound that does not contain oil or other items that may inhibit the adhesive bond.
C. Slab must be dust free. In the event that dust impairs adhesive bond, priming the slab prior to application of adhesive may be necessary. Follow installation guidelines.
D. Follow OSHA guidelines

3.3 *INSTALLATION*

A. The installation area shall be closed to all traffic and activity for a period to be set by the indoor resilient athletic surfacing installer. The indoor resilient athletic surfacing installation shall not begin until the installer is familiar with the existing conditions.
B. All necessary precautions should be taken to minimize noise, smell, dust, the use of hazardous materials and any other items that may inconvenience others.
C. Install the indoor resilient athletic surfacing in strict accordance with the indoor resilient athletic surfacing manufacturer's written instructions.
D. Install the indoor resilient athletic surfacing minimizing cross seams. Provide a seam diagram during the submittal process for approval prior to installation. Vinyl Sheet Flooring Seams: Comply with ASTM F 1516. Rout joints and heat weld to permanently and seamlessly fuse sections together.
E. Paint game lines using approved game line paint primer and game line paint in strict accordance with the game line paint manufacturer's instructions.
F. Install appropriate threshold plates or transition strips where necessary.

3.5 *CLEANING*

A. Remove all unused materials, tools, and equipment and dispose of any debris properly. Clean the indoor resilient athletic surfacing in accordance with the manufacturer's instructions.

3.6 *PROTECTION*

A. If required, protect the indoor resilient athletic surfacing from damage using coverings approved by the manufacturer until acceptance of work by the customer or their authorized representative.

3.7 *RELATED STANDARDS AND GUIDELINES*

A. ASTM F2170 "Standard Test Method for Determining Relative Humidity In Concrete Floor Slabs Using In-Situ Probes"
B. ASTM F710 "Standard Practice for Preparing Concrete Floors to Receive Resilient Flooring"
C. ACI 302.2R-06 "Guideline for Concrete Slabs that Receive Moisture-Sensitive Flooring Materials"
D. ASTM F2772-11 "Standard Specification for Athletic Performance Properties of Indoor Sports Floor Systems"

END OF SECTION

SECTION 09 65 66
ARCHITECTURAL SPECIFICATIONS FOR INDOOR RESILIENT ATHLETIC SURFACING

PART 1 – GENERAL

1.1 *SECTION INCLUDES*

A. Supply and installation of the indoor resilient multipurpose surfacing
B. Application of the game lines
C. References for the correct construction and preparation of concrete slabs to receive resilient flooring.

1.2 *SUBMITTALS*

A. Product Data:
   1. Manufacturer's promotional brochures, specifications and installation instructions
B. Manufacturer Certifications:
   1. Provide certification that accurately identifies the Original Equipment Manufacturer (OEM) of flooring furnished for this project including manufacturer's name, address and factory location.
   2. Suppliers of private label flooring for this project must identify themselves as such and fully disclose the OEM information listed above.
   3. All "manufacturer" requirements in these specifications must be complied with by the OEM, including warranties, certifications, qualifications, product data, test results, environmental requirements, performance data, etc.
C. Samples:
   1. Submit for selection and approval three (3) sets of the indoor resilient multipurpose surfacing, manufacturer's brochures, samples or sample boards of all of the available colors, textures and styles.
   2. Submit color samples of all the available game line paint colors for selection and approval.
D. Closeout Submittals:
   1. Submit three (3) copies of the indoor resilient multipurpose surfacing and manufacturer's maintenance instructions.
   2. Submit three (3) copies of the material and installation warranties as specified.

1.3 *QUALITY ASSURANCE*

A. Qualifications:
   1. The indoor resilient multipurpose surfacing shall have been actively marketed for a minimum of ten (10) years.
   2. The indoor resilient multipurpose surfacing shall be manufactured in an ISO 9001 certified plant.
   3. The indoor resilient multipurpose surfacing shall be manufactured in an ISO 14001 certified plant.
   4. The indoor resilient multipurpose surfacing supplier shall be an established firm, experienced in the field, and competent in the techniques required by the manufacturer.
   5. The installer of the indoor resilient multipurpose surfacing shall have a minimum of five (5) years of experience in the field installing indoor resilient multipurpose surfacing and have worked on at least five (5) projects of similar size, type and complexity.

B. Certifications:
   1. Installer to submit the indoor resilient athletic surfacing manufacturer's or distributor's certification attesting that they are an approved installer of the indoor resilient multipurpose surfacing.
   2. The ind**o**or resilient multipurpose surfacing manufacturer to submit official ISO 9001 certification for the facility in which the indoor resilient multipurpose surfacing is manufactured.

C. Testing:
   Tests shall be relative for multi-purpose use with certificates from independent testing resources to be made available upon request. Test results shall be performed according to ASTM standard testing procedures including ASTM F2772 "Standard Specification for Athletic Performance Properties of Indoor Sports Floor Systems".

1.4 *DELIVERY, STORAGE AND HANDLING*

A. Delivery:
   Material shall not be delivered until all related work is in place and finished and/or proper storage facilities and conditions can be provided and guaranteed stable according to FieldTurf USA, Inc. recommendations.

B. Storage:
   1. Store the material in a secure, clean and dry location.
   2. Maintain temperature between 55° and 85° Fahrenheit.
   3. Store the indoor resilient athletic surfacing rolls in an upright position on a smooth flat surface immediately upon delivery to jobsite.
   4. Rolls shipped in rigid protective cardboard containers can be laid horizontally prior to unpacking and installation.

1.5 *PROJECT/SITE CONDITIONS*

A. It is the responsibility of the general contractor/construction manager to maintain project/site conditions acceptable for the installation of the indoor resilient multipurpose flooring.

B. The area in which the indoor resilient multipurpose surfacing will be installed shall be dry and weather tight. Permanent heat, light and ventilation shall be installed and operable.

C. All other trades shall have completed their work prior to the installation of the resilient athletic flooring. The general contractor or construction manager shall maintain a secure and clean working environment before, during and after the installation.

D. Maintain a stable room temperature of at least 65°F for a minimum of one (1) week prior to, during and thereafter installation.

E. An effective low-permeance vapor barrier is placed directly beneath the concrete subfloor. For "on" or "below grade" installations, it is recommended to provide a permanent vapor barrier resistant to long term hydrostatic pressure/moisture exposure. Protrusions should be sealed to prevent moisture migration into the slab. Moisture should not be allowed to enter the slab after the completed construction.

F. Concrete subfloor surface pH level within the 7 to 11 range dependent upon installation type.

G. Concrete subfloor should be no greater than 1/8" within a 10 ft diameter. This tolerance can be measured in accordance with ASTM E1155. A specified (F_F) of 50 and an (F_L) of 30 should reach this degree of floor flatness and floor level. There is no numerical correlation between F numbers and the deviation from the straight

edge. However, the above specified numbers should achieve a flat floor with minimal deviation in the slab. Reference ACI 117 and ACI 302.1R. The general contractor should provide a certificate of compliance with the above recommendations.

H. Concrete subfloor must be clean and free of all foreign materials or objects including, but not limited to, curing compounds and sealers.

I. Fill cracks, grooves, voids, depressions, and other minor imperfections. Follow the manufacturer's directions. Moveable joints must be treated utilizing specific transitioning joint devices depending upon the architect's recommendations. Follow current ASTM F710 guidelines for the preparation of concrete slabs to receive resilient flooring.

J. Refer to ACI 302.2R "Guidelines for Concrete Slabs that Receive Moisture-Sensitive Flooring Materials" for concrete design and construction.

K. Concrete slab shall be fortified with continual steel reinforcement. Fiber reinforcement alone shall not be considered adequate fortification.

1.6 *WARRANTY*

A. Special Limited Warranty:
   1. Manufacturer's standard form in which manufacturer agrees to repair or replace sports flooring including labor that fails within specified warranty period.

B. Material warranty must be direct from the product manufacturer.
   1. Material warranties must come from original manufacturer or division thereof. Private label warranties from distributors or brokers are not valid. Supply original point of manufacturing upon request.

C. Failures include, but are not limited to, the following:
   1. Material manufacturing defects.
   2. Surface wear and deterioration to the point of wear-through of wear layer per ASTM F410/ASTM F1303.
   3. Failure due to substrate moisture exposure exceeding 98 percent relative humidity when tested according to ASTM F2170.

D. Warranty Period:
   1. For material defects and surface wear-through: **25** years from date of substantial completion.
   2. For moisture vapor tolerance: **25** years from date of substantial completion.

E. Installer's Limited Warranty:
   1. Installer's standard form in which installer agrees to repair or replace sports flooring that fails due to poor workmanship or faulty installation within the specified warranty period.
   2. Warranty Period: 2 years from date of substantial completion.

1.7 *ADDITIONAL MATERIALS*

A. Furnish to the owner additional materials containing a total of at least 1% of each different color or design of the indoor resilient athletic surfacing used on the project.

1.8 *LEED™ CERTIFICATION*

A. The indoor resilient athletic surfacing should be able to help this facility to achieve points towards *LEED™ certification.* Flooring system must be certified by FloorScore.
B. LEED categories positively affected by the indoor resilient athletic surfacing:

LEED™ V4 Credit		Contribution
Materials & Resources: Building Product Disclosure & Optimization (BPDO)		
MRc3: Sourcing of Raw Materials	Options 1 & 2	2 Points
MRc4: Material Ingredients	Option 1	1 Point
MRc5: Construction and Demolition Management	Reclamation and Recycling	ReStart® Program
Indoor Environmental Quality		
EQc2: Low-Emitting Materials	TVOC: 0.5 mg/m3 or less	FloorScore®

PART 2 - PRODUCTS

2.1 *MANUFACTURERS*

A. The basis of the design for the indoor resilient multipurpose surfacing is Omnisports PurePlay as manufactured by Tarkett.
B. All other installation accessories and related components must be either made or approved by the indoor resilient athletic surfacing manufacturer.
C. Other products may be approved as equal if deemed qualified and submitted in accordance with the General Conditions.
D. Test reports confirming compliance from an independent sports laboratory must be provided along with samples, technical data, installation, maintenance, and warranty prior to acceptance as an alternative product.

2.2 *MATERIALS*

A. Omnisports PurePlay - Prefabricated sport surface 9.4 mm (3/8”) with wood flooring design and slightly textured embossed surface as supplied by Tarkett.
   1. Embossing of wood design and solid colors must be the same; varying embossing or surface textures will not be allowed.
   2. Printing of wood design shall closely resemble standard wood strip flooring in size, color, board length, and grain appearance.
   3. The wood design shall be protected by a clear layer of pure PVC (Polyvinyl Chloride) and TopClean xp, a factory-applied UV cured urethane treatment.
   4. Intermediate layers shall be fortified with a non-woven fiberglass grid for increased dimensional stability.
   5. The foam force reduction layer shall be high-density closed cell PVC foam with honeycomb embossing, and is applied in one continuous manufacturing process.
   6. Laminated or adhered foam layers will not be allowed.
   7. Field constructed products will not be accepted.

A. Physical properties of the indoor resilient athletic surfacing shall conform to the following minimums:

Width	—	6’ 6” (2 m)
Length	—	85’ (25.9m) approx.
Wear Layer	—	2 mm
Total Thickness	—	9.4 mm
Wear Layer	Type 1– Grade 1	ASTM F1303/F410
Vertical Deformation	PASSED	ASTM F2772
Rolling Load	PASSED	0.30 (EN 1569 {11/1999})
Surface Finish Effect	PASSED	ASTM F2772 (80 – 110)
Chemical Resistance	Excellent	ASTM F925
Impact Resistance	PASSED	EN 1517
Abrasion Resistance	PASSED	0.10 (EN ISO 5470-1 {06/1999})
Static Load Limit	PASSED	ASTM F970- Load 175 Lbs
Sound Insulation	Excellent	+/= 19 dB (ISO 717/2)
In-Room Sound Insulation	Excellent	61dB (NF S31-074)
Ball Rebound	PASSED	ASTM F2772 > 90%
Force Reduction	PASSED	ASTM F2772 Class 3
Fire Rating	PASSED	ASTM E648 Class 1
Microbial Assays Test	No Growth	G21 ASTM - Backing
Asthma and Allergy Friendly™	ASP: 05-01/101	Certified Compliant
Phthalate-free technology	—	YES
REACH Compliant	—	YES
Heavy Metals	—	NO
ISO 9001	—	YES
ISO 14001	—	YES

1. Color: As available from the indoor resilient athletic surfacing manufacturer’s standard range.
2. Hardwood Design Series: High definition printing for a realistic wood surface appearance as available from the indoor resilient athletic surfacing manufacturer’s standard range.
3. Texture: Texture to remain consistent between solid colors and wood design when blending colors.

C. Welding Rod: As supplied by the indoor resilient athletic surfacing manufacturer or supplier.
   1. Color to blend with the indoor resilient athletic surfacing color or design.
   2. All seams shall be welded to create a monolithic and impermeable surface.

D. Adhesive: As approved by the indoor resilient athletic surfacing manufacturer.

E. Game Line Paint and Primer: As approved by the indoor resilient athletic surfacing manufacturer.

PART 3 - EXECUTION

3.1 *EXAMINATION*

A. It is the responsibility of the general contractor/construction manager to ensure that project/site conditions are acceptable for the installation of the indoor resilient athletic flooring.
B. Verify that the area in which the indoor resilient athletic surfacing will be installed is dry and weather tight. Verify that permanent heat, light and ventilation are installed and operable.
C. Verify that all other work that could cause damage, dirt and dust or interrupt the normal pace of the indoor resilient athletic flooring installation is completed or suspended.
D. Verify that there is a stable room temperature of at least 65◦F.
E. Verify that there are no foreign materials or objects on the subfloor and that the subfloor is clean and ready for installation.
F. *Direct Full Spread Adhering to Concrete Subfloor HS Sports Spray : moisture content less than 90% RH when tested per ASTM F2170.*
G. Follow Fieldturf USA, Inc. installation recommendations.
H. Do not average the results of the tests. Report all field test results in writing to the General Contractor, Architect, and End User prior to installation.
I. Verify that the concrete subfloor surface pH level is within the 7 - 11 range.
J. Document the results confirming the slab is within manufacturer's tolerances for slab deviation.

3.2 *PREPARATION OF SURFACES*

A. Sand the entire surface of the concrete slab.
B. Sweep the concrete slab so as to remove all dirt and dust. If a sweeping compound is to be used it must be a sweeping compound that does not contain oil or other items that may inhibit the adhesive bond.
C. Slab must be dust free. In the event that dust impairs adhesive bond, priming the slab prior to application of adhesive may be necessary. Follow installation guidelines.
D. Follow OSHA guidelines.

3.3 *INSTALLATION*

A. The installation area shall be closed to all traffic and activity for a period to be set by the indoor resilient athletic surfacing installer. The indoor resilient athletic surfacing installation shall not begin until the installer is familiar with the existing conditions.
B. All necessary precautions should be taken to minimize noise, smell, dust, the use of hazardous materials and any other items that may inconvenience others.
C. Install the indoor resilient athletic surfacing in strict accordance with the indoor resilient athletic surfacing manufacturer's written instructions.
D. Install the indoor resilient athletic surfacing minimizing cross seams. Provide a seam diagram during the submittal process for approval prior to installation. Vinyl Sheet Flooring Seams: Comply with ASTM F 1516. Rout joints and heat weld to permanently and seamlessly fuse sections together.
E. Paint game lines using approved game line paint primer and game line paint in strict accordance with the game line paint manufacturer's instructions.
F. Install appropriate threshold plates or transition strips where necessary.

3.5 *CLEANING*

A. Remove all unused materials, tools, and equipment and dispose of any debris properly. Clean the indoor resilient athletic surfacing in accordance with the manufacturer's instructions.

3.6 *PROTECTION*

A. If required, protect the indoor resilient athletic surfacing from damage using coverings approved by the manufacturer until acceptance of work by the customer or their authorized representative.

3.7 *RELATED STANDARDS AND GUIDELINES*

A. ASTM F2170 "Standard Test Method for Determining Relative Humidity In Concrete Floor Slabs Using In-Situ Probes"
B. ASTM F710 "Standard Practice for Preparing Concrete Floors to Receive Resilient Flooring"
C. ACI 302.2R-06 "Guideline for Concrete Slabs that Receive Moisture-Sensitive Flooring Materials"
D. ASTM F2772-11 "Standard Specification for Athletic Performance Properties of Indoor Sports Floor Systems"

END OF SECTION

SECTION 09 65 66
ARCHITECTURAL SPECIFICATIONS FOR INDOOR RESILIENT ATHLETIC SURFACING

PART 1 – GENERAL

1.1 *SECTION INCLUDES*

A. Supply and installation of the indoor resilient multipurpose surfacing
B. Application of the game lines
C. References for the correct construction and preparation of concrete slabs to receive resilient flooring.

1.2 *SUBMITTALS*

A. Product Data:
   1. Manufacturer's promotional brochures, specifications and installation instructions
B. Manufacturer Certifications:
   1. Provide certification that accurately identifies the Original Equipment Manufacturer (OEM) of flooring furnished for this project including manufacturer's name, address and factory location.
   2. Suppliers of private label flooring for this project must identify themselves as such and fully disclose the OEM information listed above.
   3. All "manufacturer" requirements in these specifications must be complied with by the OEM, including warranties, certifications, qualifications, product data, test results, environmental requirements, performance data, etc.
C. Samples:
   1. Submit for selection and approval three (3) sets of the indoor resilient multipurpose surfacing, manufacturer's brochures, samples or sample boards of all of the available colors, textures and styles.
   2. Submit color samples of all the available game line paint colors for selection and approval.
D. Closeout Submittals:
   1. Submit three (3) copies of the indoor resilient multipurpose surfacing and manufacturer's maintenance instructions.
   2. Submit three (3) copies of the material and installation warranties as specified.

1.3 *QUALITY ASSURANCE*

A. Qualifications:
   1. The indoor resilient multipurpose surfacing shall have been actively marketed for a minimum of ten (10) years.
   2. The indoor resilient multipurpose surfacing shall be manufactured in an ISO 9001 certified plant.
   3. The indoor resilient multipurpose surfacing shall be manufactured in an ISO 14001 certified plant.
   4. The indoor resilient multipurpose surfacing supplier shall be an established firm, experienced in the field, and competent in the techniques required by the manufacturer.
   5. The installer of the indoor resilient multipurpose surfacing shall have a minimum of five (5) years of experience in the field installing indoor resilient multipurpose surfacing and have worked on at least five (5) projects of similar size, type and complexity.

B. Certifications:
   1. Installer to submit the indoor resilient athletic surfacing manufacturer's or distributor's certification attesting that they are an approved installer of the indoor resilient multipurpose surfacing.
   2. The ind**o**or resilient multipurpose surfacing manufacturer to submit official ISO 9001 certification for the facility in which the indoor resilient multipurpose surfacing is manufactured.

C. Testing:
   Tests shall be relative for multi-purpose use with certificates from independent testing resources to be made available upon request. Test results shall be performed according to ASTM standard testing procedures including ASTM F2772 "Standard Specification for Athletic Performance Properties of Indoor Sports Floor Systems".

1.4 *DELIVERY, STORAGE AND HANDLING*

A. Delivery:
   Material shall not be delivered until all related work is in place and finished and/or proper storage facilities and conditions can be provided and guaranteed stable according to FieldTurf USA, Inc. recommendations.

B. Storage:
   1. Store the material in a secure, clean and dry location.
   2. Maintain temperature between 55° and 85° Fahrenheit.
   3. Store the indoor resilient athletic surfacing rolls in an upright position on a smooth flat surface immediately upon delivery to jobsite.
   4. Rolls shipped in rigid protective cardboard containers can be laid horizontally prior to unpacking and installation.

1.5 *PROJECT/SITE CONDITIONS*

A. It is the responsibility of the general contractor/construction manager to maintain project/site conditions acceptable for the installation of the indoor resilient multipurpose flooring.

B. The area in which the indoor resilient multipurpose surfacing will be installed shall be dry and weather tight. Permanent heat, light and ventilation shall be installed and operable.

C. All other trades shall have completed their work prior to the installation of the resilient athletic flooring. The general contractor or construction manager shall maintain a secure and clean working environment before, during and after the installation.

D. Maintain a stable room temperature of at least 65°F for a minimum of one (1) week prior to, during and thereafter installation.

E. An effective low-permeance vapor barrier is placed directly beneath the concrete subfloor. For "on" or "below grade" installations, it is recommended to provide a permanent vapor barrier resistant to long term hydrostatic pressure/moisture exposure. Protrusions should be sealed to prevent moisture migration into the slab. Moisture should not be allowed to enter the slab after the completed construction.

F. Concrete subfloor surface pH level within the 7 to 11 range dependent upon installation type.

G. Concrete subfloor should be no greater than 1/8" within a 10 ft diameter. This tolerance can be measured in accordance with ASTM E1155. A specified (F_F) of 50 and an (F_L) of 30 should reach this degree of floor flatness and floor level. There is no numerical correlation between F numbers and the deviation from the straight

edge. However, the above specified numbers should achieve a flat floor with minimal deviation in the slab. Reference ACI 117 and ACI 302.1R. The general contractor should provide a certificate of compliance with the above recommendations.

H. Concrete subfloor must be clean and free of all foreign materials or objects including, but not limited to, curing compounds and sealers.

I. Fill cracks, grooves, voids, depressions, and other minor imperfections. Follow the manufacturer's directions. Moveable joints must be treated utilizing specific transitioning joint devices depending upon the architect's recommendations. Follow current ASTM F710 guidelines for the preparation of concrete slabs to receive resilient flooring.

J. Refer to ACI 302.2R "Guidelines for Concrete Slabs that Receive Moisture-Sensitive Flooring Materials" for concrete design and construction.

K. Concrete slab shall be fortified with continual steel reinforcement. Fiber reinforcement alone shall not be considered adequate fortification.

1.6 *WARRANTY*

A. Special Limited Warranty:
   1. Manufacturer's standard form in which manufacturer agrees to repair or replace sports flooring including labor that fails within specified warranty period.

B. Material warranty must be direct from the product manufacturer.
   1. Material warranties must come from original manufacturer or division thereof. Private label warranties from distributors or brokers are not valid. Supply original point of manufacturing upon request.

C. Failures include, but are not limited to, the following:
   1. Material manufacturing defects.
   2. Surface wear and deterioration to the point of wear-through of wear layer per ASTM F410/ASTM F1303.
   3. Failure due to substrate moisture exposure exceeding 98 percent relative humidity when tested according to ASTM F2170.

D. Warranty Period:
   1. For material defects and surface wear-through: **25** years from date of substantial completion.
   2. For moisture vapor tolerance: **25** years from date of substantial completion.

E. Installer's Limited Warranty:
   1. Installer's standard form in which installer agrees to repair or replace sports flooring that fails due to poor workmanship or faulty installation within the specified warranty period.
   2. Warranty Period: 2 years from date of substantial completion.

1.7 *ADDITIONAL MATERIALS*

A. Furnish to the owner additional materials containing a total of at least 1% of each different color or design of the indoor resilient athletic surfacing used on the project.

1.8 *LEED™ CERTIFICATION*

A. The indoor resilient athletic surfacing should be able to help this facility to achieve points towards *LEED™ certification.* Flooring system must be certified by FloorScore.
B. LEED categories positively affected by the indoor resilient athletic surfacing:

LEED™ V4 Credit		Contribution
Materials & Resources: Building Product Disclosure & Optimization (BPDO)		
MRc3: Sourcing of Raw Materials	Options 1 & 2	2 Points
MRc4: Material Ingredients	Option 1	1 Point
MRc5: Construction and Demolition Management	Reclamation and Recycling	ReStart® Program
Indoor Environmental Quality		
EQc2: Low-Emitting Materials	TVOC: 0.5 mg/m3 or less	FloorScore®

PART 2 - PRODUCTS

2.1 *MANUFACTURERS*

A. The basis of the design for the indoor resilient multipurpose surfacing is Omnisports PurePlay as manufactured by Tarkett.
B. All other installation accessories and related components must be either made or approved by the indoor resilient athletic surfacing manufacturer.
C. Other products may be approved as equal if deemed qualified and submitted in accordance with the General Conditions.
D. Test reports confirming compliance from an independent sports laboratory must be provided along with samples, technical data, installation, maintenance, and warranty prior to acceptance as an alternative product.

2.2 *MATERIALS*

A. Omnisports PurePlay - Prefabricated sport surface 9.4 mm (3/8”) with wood flooring design and slightly textured embossed surface as supplied by Tarkett.
   1. Embossing of wood design and solid colors must be the same; varying embossing or surface textures will not be allowed.
   2. Printing of wood design shall closely resemble standard wood strip flooring in size, color, board length, and grain appearance.
   3. The wood design shall be protected by a clear layer of pure PVC (Polyvinyl Chloride) and TopClean xp, a factory-applied UV cured urethane treatment.
   4. Intermediate layers shall be fortified with a non-woven fiberglass grid for increased dimensional stability.
   5. The foam force reduction layer shall be high-density closed cell PVC foam with honeycomb embossing, and is applied in one continuous manufacturing process.
   6. Laminated or adhered foam layers will not be allowed.
   7. Field constructed products will not be accepted.

A. Physical properties of the indoor resilient athletic surfacing shall conform to the following minimums:

Width	—	6’ 6” (2 m)
Length	—	85’ (25.9m) approx.
Wear Layer	—	2 mm
Total Thickness	—	9.4 mm
Wear Layer	Type 1– Grade 1	ASTM F1303/F410
Vertical Deformation	PASSED	ASTM F2772
Rolling Load	PASSED	0.30 (EN 1569 {11/1999})
Surface Finish Effect	PASSED	ASTM F2772 (80 – 110)
Chemical Resistance	Excellent	ASTM F925
Impact Resistance	PASSED	EN 1517
Abrasion Resistance	PASSED	0.10 (EN ISO 5470-1 {06/1999})
Static Load Limit	PASSED	ASTM F970- Load 175 Lbs
Sound Insulation	Excellent	+/= 19 dB (ISO 717/2)
In-Room Sound Insulation	Excellent	61dB (NF S31-074)
Ball Rebound	PASSED	ASTM F2772 > 90%
Force Reduction	PASSED	ASTM F2772 Class 3
Fire Rating	PASSED	ASTM E648 Class 1
Microbial Assays Test	No Growth	G21 ASTM - Backing
Asthma and Allergy Friendly™	ASP: 05-01/101	Certified Compliant
Phthalate-free technology	—	YES
REACH Compliant	—	YES
Heavy Metals	—	NO
ISO 9001	—	YES
ISO 14001	—	YES

1. Color: As available from the indoor resilient athletic surfacing manufacturer’s standard range.
2. Hardwood Design Series: High definition printing for a realistic wood surface appearance as available from the indoor resilient athletic surfacing manufacturer’s standard range.
3. Texture: Texture to remain consistent between solid colors and wood design when blending colors.

C. Welding Rod: As supplied by the indoor resilient athletic surfacing manufacturer or supplier.
   1. Color to blend with the indoor resilient athletic surfacing color or design.
   2. All seams shall be welded to create a monolithic and impermeable surface.

D. Adhesive: As approved by the indoor resilient athletic surfacing manufacturer.

E. Game Line Paint and Primer: As approved by the indoor resilient athletic surfacing manufacturer.

PART 3 - EXECUTION

3.1 *EXAMINATION*

A. It is the responsibility of the general contractor/construction manager to ensure that project/site conditions are acceptable for the installation of the indoor resilient athletic flooring.
B. Verify that the area in which the indoor resilient athletic surfacing will be installed is dry and weather tight. Verify that permanent heat, light and ventilation are installed and operable.
C. Verify that all other work that could cause damage, dirt and dust or interrupt the normal pace of the indoor resilient athletic flooring installation is completed or suspended.
D. Verify that there is a stable room temperature of at least 65◦F.
E. Verify that there are no foreign materials or objects on the subfloor and that the subfloor is clean and ready for installation.
F. *Direct Full Spread Adhering to Concrete Subfloor Multi-Poxy : moisture content less than 98% RH when tested per ASTM F2170.*
G. Follow Fieldturf USA, Inc. installation recommendations.
H. Do not average the results of the tests. Report all field test results in writing to the General Contractor, Architect, and End User prior to installation.
I. Verify that the concrete subfloor surface pH level is within the 7 - 11 range.
J. Document the results confirming the slab is within manufacturer's tolerances for slab deviation.

3.2 *PREPARATION OF SURFACES*

A. Sand the entire surface of the concrete slab.
B. Sweep the concrete slab so as to remove all dirt and dust. If a sweeping compound is to be used it must be a sweeping compound that does not contain oil or other items that may inhibit the adhesive bond.
C. Slab must be dust free. In the event that dust impairs adhesive bond, priming the slab prior to application of adhesive may be necessary. Follow installation guidelines.
D. Follow OSHA guidelines.

3.3 *INSTALLATION*

A. The installation area shall be closed to all traffic and activity for a period to be set by the indoor resilient athletic surfacing installer. The indoor resilient athletic surfacing installation shall not begin until the installer is familiar with the existing conditions.
B. All necessary precautions should be taken to minimize noise, smell, dust, the use of hazardous materials and any other items that may inconvenience others.
C. Install the indoor resilient athletic surfacing in strict accordance with the indoor resilient athletic surfacing manufacturer's written instructions.
D. Install the indoor resilient athletic surfacing minimizing cross seams. Provide a seam diagram during the submittal process for approval prior to installation. Vinyl Sheet Flooring Seams: Comply with ASTM F 1516. Rout joints and heat weld to permanently and seamlessly fuse sections together.
E. Paint game lines using approved game line paint primer and game line paint in strict accordance with the game line paint manufacturer's instructions.
F. Install appropriate threshold plates or transition strips where necessary.

3.5 *CLEANING*

A. Remove all unused materials, tools, and equipment and dispose of any debris properly. Clean the indoor resilient athletic surfacing in accordance with the manufacturer's instructions.

3.6 *PROTECTION*

A. If required, protect the indoor resilient athletic surfacing from damage using coverings approved by the manufacturer until acceptance of work by the customer or their authorized representative.

3.7 *RELATED STANDARDS AND GUIDELINES*

A. ASTM F2170 "Standard Test Method for Determining Relative Humidity In Concrete Floor Slabs Using In-Situ Probes"
B. ASTM F710 "Standard Practice for Preparing Concrete Floors to Receive Resilient Flooring"
C. ACI 302.2R-06 "Guideline for Concrete Slabs that Receive Moisture-Sensitive Flooring Materials"
D. ASTM F2772-11 "Standard Specification for Athletic Performance Properties of Indoor Sports Floor Systems"

END OF SECTION

SECTION 09 65 66
ARCHITECTURAL SPECIFICATIONS FOR INDOOR RESILIENT ATHLETIC SURFACING

PART 1 – GENERAL

1.1 *SECTION INCLUDES*

A. Supply and installation of the indoor resilient multipurpose surfacing
B. Application of the game lines
C. References for the correct construction and preparation of concrete slabs to receive resilient flooring.

1.2 *SUBMITTALS*

A. Product Data:
   1. Manufacturer's promotional brochures, specifications and installation instructions
B. Manufacturer Certifications:
   1. Provide certification that accurately identifies the Original Equipment Manufacturer (OEM) of flooring furnished for this project including manufacturer's name, address and factory location.
   2. Suppliers of private label flooring for this project must identify themselves as such and fully disclose the OEM information listed above.
   3. All "manufacturer" requirements in these specifications must be complied with by the OEM, including warranties, certifications, qualifications, product data, test results, environmental requirements, performance data, etc.
C. Samples:
   1. Submit for selection and approval three (3) sets of the indoor resilient multipurpose surfacing, manufacturer's brochures, samples or sample boards of all of the available colors, textures and styles.
   2. Submit color samples of all the available game line paint colors for selection and approval.
D. Closeout Submittals:
   1. Submit three (3) copies of the indoor resilient multipurpose surfacing and manufacturer's maintenance instructions.
   2. Submit three (3) copies of the material and installation warranties as specified.

1.3 *QUALITY ASSURANCE*

A. Qualifications:
   1. The indoor resilient multipurpose surfacing shall have been actively marketed for a minimum of ten (10) years.
   2. The indoor resilient multipurpose surfacing shall be manufactured in an ISO 9001 certified plant.
   3. The indoor resilient multipurpose surfacing shall be manufactured in an ISO 14001 certified plant.
   4. The indoor resilient multipurpose surfacing supplier shall be an established firm, experienced in the field, and competent in the techniques required by the manufacturer.
   5. The installer of the indoor resilient multipurpose surfacing shall have a minimum of five (5) years of experience in the field installing indoor resilient multipurpose surfacing and have worked on at least five (5) projects of similar size, type and complexity.

B. Certifications:
   1. Installer to submit the indoor resilient athletic surfacing manufacturer's or distributor's certification attesting that they are an approved installer of the indoor resilient multipurpose surfacing.
   2. The ind**o**or resilient multipurpose surfacing manufacturer to submit official ISO 9001 certification for the facility in which the indoor resilient multipurpose surfacing is manufactured.

C. Testing:
   Tests shall be relative for multi-purpose use with certificates from independent testing resources to be made available upon request. Test results shall be performed according to ASTM standard testing procedures including ASTM F2772 "Standard Specification for Athletic Performance Properties of Indoor Sports Floor Systems".

1.4 *DELIVERY, STORAGE AND HANDLING*

A. Delivery:
   Material shall not be delivered until all related work is in place and finished and/or proper storage facilities and conditions can be provided and guaranteed stable according to FieldTurf USA, Inc. recommendations.

B. Storage:
   1. Store the material in a secure, clean and dry location.
   2. Maintain temperature between 55° and 85° Fahrenheit.
   3. Store the indoor resilient athletic surfacing rolls in an upright position on a smooth flat surface immediately upon delivery to jobsite.
   4. Rolls shipped in rigid protective cardboard containers can be laid horizontally prior to unpacking and installation.

1.5 *PROJECT/SITE CONDITIONS*

A. It is the responsibility of the general contractor/construction manager to maintain project/site conditions acceptable for the installation of the indoor resilient multipurpose flooring.

B. The area in which the indoor resilient multipurpose surfacing will be installed shall be dry and weather tight. Permanent heat, light and ventilation shall be installed and operable.

C. All other trades shall have completed their work prior to the installation of the resilient athletic flooring. The general contractor or construction manager shall maintain a secure and clean working environment before, during and after the installation.

D. Maintain a stable room temperature of at least 65°F for a minimum of one (1) week prior to, during and thereafter installation.

E. An effective low-permeance vapor barrier is placed directly beneath the concrete subfloor. For "on" or "below grade" installations, it is recommended to provide a permanent vapor barrier resistant to long term hydrostatic pressure/moisture exposure. Protrusions should be sealed to prevent moisture migration into the slab. Moisture should not be allowed to enter the slab after the completed construction.

F. Concrete subfloor surface pH level within the 7 to 11 range dependent upon installation type.

G. Concrete subfloor should be no greater than 1/8" within a 10 ft diameter. This tolerance can be measured in accordance with ASTM E1155. A specified (F_F) of 50 and an (F_L) of 30 should reach this degree of floor flatness and floor level. There is no numerical correlation between F numbers and the deviation from the straight

edge. However, the above specified numbers should achieve a flat floor with minimal deviation in the slab. Reference ACI 117 and ACI 302.1R. The general contractor should provide a certificate of compliance with the above recommendations.

H. Concrete subfloor must be clean and free of all foreign materials or objects including, but not limited to, curing compounds and sealers.

I. Fill cracks, grooves, voids, depressions, and other minor imperfections. Follow the manufacturer's directions. Moveable joints must be treated utilizing specific transitioning joint devices depending upon the architect's recommendations. Follow current ASTM F710 guidelines for the preparation of concrete slabs to receive resilient flooring.

J. Refer to ACI 302.2R "Guidelines for Concrete Slabs that Receive Moisture-Sensitive Flooring Materials" for concrete design and construction.

K. Concrete slab shall be fortified with continual steel reinforcement. Fiber reinforcement alone shall not be considered adequate fortification.

1.6 *WARRANTY*

A. Special Limited Warranty:
   1. Manufacturer's standard form in which manufacturer agrees to repair or replace sports flooring including labor that fails within specified warranty period.

B. Material warranty must be direct from the product manufacturer.
   1. Material warranties must come from original manufacturer or division thereof. Private label warranties from distributors or brokers are not valid. Supply original point of manufacturing upon request.

C. Failures include, but are not limited to, the following:
   1. Material manufacturing defects.
   2. Surface wear and deterioration to the point of wear-through of wear layer per ASTM F410/ASTM F1303.
   3. Failure due to substrate moisture exposure exceeding 98 percent relative humidity when tested according to ASTM F2170.

D. Warranty Period:
   1. For material defects and surface wear-through: **25** years from date of substantial completion.
   2. For moisture vapor tolerance: **25** years from date of substantial completion.

E. Installer's Limited Warranty:
   1. Installer's standard form in which installer agrees to repair or replace sports flooring that fails due to poor workmanship or faulty installation within the specified warranty period.
   2. Warranty Period: 2 years from date of substantial completion.

1.7 *ADDITIONAL MATERIALS*

A. Furnish to the owner additional materials containing a total of at least 1% of each different color or design of the indoor resilient athletic surfacing used on the project.

1.8 *LEED™ CERTIFICATION*

A. The indoor resilient athletic surfacing should be able to help this facility to achieve points towards *LEED™ certification.* Flooring system must be certified by FloorScore.
B. LEED categories positively affected by the indoor resilient athletic surfacing:

LEED™ V4 Credit		Contribution
Materials & Resources: Building Product Disclosure & Optimization (BPDO)		
MRc3: Sourcing of Raw Materials	Options 1 & 2	2 Points
MRc4: Material Ingredients	Option 1	1 Point
MRc5: Construction and Demolition Management	Reclamation and Recycling	ReStart® Program
Indoor Environmental Quality		
EQc2: Low-Emitting Materials	TVOC: 0.5 mg/m3 or less	FloorScore®

PART 2 - PRODUCTS

2.1 *MANUFACTURERS*

A. The basis of the design for the indoor resilient multipurpose surfacing is Omnisports PurePlay as manufactured by Tarkett.
B. All other installation accessories and related components must be either made or approved by the indoor resilient athletic surfacing manufacturer.
C. Other products may be approved as equal if deemed qualified and submitted in accordance with the General Conditions.
D. Test reports confirming compliance from an independent sports laboratory must be provided along with samples, technical data, installation, maintenance, and warranty prior to acceptance as an alternative product.

2.2 *MATERIALS*

A. Omnisports PurePlay - Prefabricated sport surface 9.4 mm (3/8”) with wood flooring design and slightly textured embossed surface as supplied by Tarkett.
   1. Embossing of wood design and solid colors must be the same; varying embossing or surface textures will not be allowed.
   2. Printing of wood design shall closely resemble standard wood strip flooring in size, color, board length, and grain appearance.
   3. The wood design shall be protected by a clear layer of pure PVC (Polyvinyl Chloride) and TopClean xp, a factory-applied UV cured urethane treatment.
   4. Intermediate layers shall be fortified with a non-woven fiberglass grid for increased dimensional stability.
   5. The foam force reduction layer shall be high-density closed cell PVC foam with honeycomb embossing, and is applied in one continuous manufacturing process.
   6. Laminated or adhered foam layers will not be allowed.
   7. Field constructed products will not be accepted.

A. Physical properties of the indoor resilient athletic surfacing shall conform to the following minimums:

Width	—	6’ 6” (2 m)
Length	—	85’ (25.9m) approx.
Wear Layer	—	2 mm
Total Thickness	—	9.4 mm
Wear Layer	Type 1– Grade 1	ASTM F1303/F410
Vertical Deformation	PASSED	ASTM F2772
Rolling Load	PASSED	0.30 (EN 1569 {11/1999})
Surface Finish Effect	PASSED	ASTM F2772 (80 – 110)
Chemical Resistance	Excellent	ASTM F925
Impact Resistance	PASSED	EN 1517
Abrasion Resistance	PASSED	0.10 (EN ISO 5470-1 {06/1999})
Static Load Limit	PASSED	ASTM F970- Load 175 Lbs
Sound Insulation	Excellent	+/= 19 dB (ISO 717/2)
In-Room Sound Insulation	Excellent	61dB (NF S31-074)
Ball Rebound	PASSED	ASTM F2772 > 90%
Force Reduction	PASSED	ASTM F2772 Class 3
Fire Rating	PASSED	ASTM E648 Class 1
Microbial Assays Test	No Growth	G21 ASTM - Backing
Asthma and Allergy Friendly™	ASP: 05-01/101	Certified Compliant
Phthalate-free technology	—	YES
REACH Compliant	—	YES
Heavy Metals	—	NO
ISO 9001	—	YES
ISO 14001	—	YES

1. Color: As available from the indoor resilient athletic surfacing manufacturer’s standard range.
2. Hardwood Design Series: High definition printing for a realistic wood surface appearance as available from the indoor resilient athletic surfacing manufacturer’s standard range.
3. Texture: Texture to remain consistent between solid colors and wood design when blending colors.

C. Welding Rod: As supplied by the indoor resilient athletic surfacing manufacturer or supplier.
   1. Color to blend with the indoor resilient athletic surfacing color or design.
   2. All seams shall be welded to create a monolithic and impermeable surface.

D. Adhesive: As approved by the indoor resilient athletic surfacing manufacturer.

E. Game Line Paint and Primer: As approved by the indoor resilient athletic surfacing manufacturer.

PART 3 - EXECUTION

3.1 *EXAMINATION*

A. It is the responsibility of the general contractor/construction manager to ensure that project/site conditions are acceptable for the installation of the indoor resilient athletic flooring.
B. Verify that the area in which the indoor resilient athletic surfacing will be installed is dry and weather tight. Verify that permanent heat, light and ventilation are installed and operable.
C. Verify that all other work that could cause damage, dirt and dust or interrupt the normal pace of the indoor resilient athletic flooring installation is completed or suspended.
D. Verify that there is a stable room temperature of at least 65◦F.
E. Verify that there are no foreign materials or objects on the subfloor and that the subfloor is clean and ready for installation.
F. *Direct Full Spread Adhering to Concrete Subfloor Multi-Set : moisture content less than 83% RH when tested per ASTM F2170.*
G. Follow Fieldturf USA, Inc. installation recommendations.
H. Do not average the results of the tests. Report all field test results in writing to the General Contractor, Architect, and End User prior to installation.
I. Verify that the concrete subfloor surface pH level is within the 7 - 11 range.
J. Document the results confirming the slab is within manufacturer's tolerances for slab deviation.

3.2 *PREPARATION OF SURFACES*

A. Sand the entire surface of the concrete slab.
B. Sweep the concrete slab so as to remove all dirt and dust. If a sweeping compound is to be used it must be a sweeping compound that does not contain oil or other items that may inhibit the adhesive bond.
C. Slab must be dust free. In the event that dust impairs adhesive bond, priming the slab prior to application of adhesive may be necessary. Follow installation guidelines.
D. Follow OSHA guidelines.

3.3 *INSTALLATION*

A. The installation area shall be closed to all traffic and activity for a period to be set by the indoor resilient athletic surfacing installer. The indoor resilient athletic surfacing installation shall not begin until the installer is familiar with the existing conditions.
B. All necessary precautions should be taken to minimize noise, smell, dust, the use of hazardous materials and any other items that may inconvenience others.
C. Install the indoor resilient athletic surfacing in strict accordance with the indoor resilient athletic surfacing manufacturer's written instructions.
D. Install the indoor resilient athletic surfacing minimizing cross seams. Provide a seam diagram during the submittal process for approval prior to installation. Vinyl Sheet Flooring Seams: Comply with ASTM F 1516. Rout joints and heat weld to permanently and seamlessly fuse sections together.
E. Paint game lines using approved game line paint primer and game line paint in strict accordance with the game line paint manufacturer's instructions.
F. Install appropriate threshold plates or transition strips where necessary.

3.5 *CLEANING*

A. Remove all unused materials, tools, and equipment and dispose of any debris properly. Clean the indoor resilient athletic surfacing in accordance with the manufacturer's instructions.

3.6 *PROTECTION*

A. If required, protect the indoor resilient athletic surfacing from damage using coverings approved by the manufacturer until acceptance of work by the customer or their authorized representative.

3.7 *RELATED STANDARDS AND GUIDELINES*

A. ASTM F2170 "Standard Test Method for Determining Relative Humidity In Concrete Floor Slabs Using In-Situ Probes"
B. ASTM F710 "Standard Practice for Preparing Concrete Floors to Receive Resilient Flooring"
C. ACI 302.2R-06 "Guideline for Concrete Slabs that Receive Moisture-Sensitive Flooring Materials"
D. ASTM F2772-11 "Standard Specification for Athletic Performance Properties of Indoor Sports Floor Systems"

END OF SECTION

SECTION 09 65 66
ARCHITECTURAL SPECIFICATIONS FOR INDOOR RESILIENT ATHLETIC SURFACING

PART 1 – GENERAL

1.1 *SECTION INCLUDES*

A. Supply and installation of the indoor resilient multipurpose surfacing
B. Application of the game lines
C. References for the correct construction and preparation of concrete slabs to receive resilient flooring.

1.2 *SUBMITTALS*

A. Product Data:
   1. Manufacturer's promotional brochures, specifications and installation instructions
B. Manufacturer Certifications:
   1. Provide certification that accurately identifies the Original Equipment Manufacturer (OEM) of flooring furnished for this project including manufacturer's name, address and factory location.
   2. Suppliers of private label flooring for this project must identify themselves as such and fully disclose the OEM information listed above.
   3. All "manufacturer" requirements in these specifications must be complied with by the OEM, including warranties, certifications, qualifications, product data, test results, environmental requirements, performance data, etc.
C. Samples:
   1. Submit for selection and approval three (3) sets of the indoor resilient multipurpose surfacing, manufacturer's brochures, samples or sample boards of all of the available colors, textures and styles.
   2. Submit color samples of all the available game line paint colors for selection and approval.
D. Closeout Submittals:
   1. Submit three (3) copies of the indoor resilient multipurpose surfacing and manufacturer's maintenance instructions.
   2. Submit three (3) copies of the material and installation warranties as specified.

1.3 *QUALITY ASSURANCE*

A. Qualifications:
   1. The indoor resilient multipurpose surfacing shall have been actively marketed for a minimum of ten (10) years.
   2. The indoor resilient multipurpose surfacing shall be manufactured in an ISO 9001 certified plant.
   3. The indoor resilient multipurpose surfacing shall be manufactured in an ISO 14001 certified plant.
   4. The indoor resilient multipurpose surfacing supplier shall be an established firm, experienced in the field, and competent in the techniques required by the manufacturer.
   5. The installer of the indoor resilient multipurpose surfacing shall have a minimum of five (5) years of experience in the field installing indoor resilient multipurpose surfacing and have worked on at least five (5) projects of similar size, type and complexity.

B. Certifications:
   1. Installer to submit the indoor resilient athletic surfacing manufacturer's or distributor's certification attesting that they are an approved installer of the indoor resilient multipurpose surfacing.
   2. The ind**o**or resilient multipurpose surfacing manufacturer to submit official ISO 9001 certification for the facility in which the indoor resilient multipurpose surfacing is manufactured.

C. Testing:
   Tests shall be relative for multi-purpose use with certificates from independent testing resources to be made available upon request. Test results shall be performed according to ASTM standard testing procedures including ASTM F2772 "Standard Specification for Athletic Performance Properties of Indoor Sports Floor Systems".

1.4 *DELIVERY, STORAGE AND HANDLING*

A. Delivery:
   Material shall not be delivered until all related work is in place and finished and/or proper storage facilities and conditions can be provided and guaranteed stable according to FieldTurf USA, Inc. recommendations.

B. Storage:
   1. Store the material in a secure, clean and dry location.
   2. Maintain temperature between 55° and 85° Fahrenheit.
   3. Store the indoor resilient athletic surfacing rolls in an upright position on a smooth flat surface immediately upon delivery to jobsite.
   4. Rolls shipped in rigid protective cardboard containers can be laid horizontally prior to unpacking and installation.

1.5 *PROJECT/SITE CONDITIONS*

A. It is the responsibility of the general contractor/construction manager to maintain project/site conditions acceptable for the installation of the indoor resilient multipurpose flooring.

B. The area in which the indoor resilient multipurpose surfacing will be installed shall be dry and weather tight. Permanent heat, light and ventilation shall be installed and operable.

C. All other trades shall have completed their work prior to the installation of the resilient athletic flooring. The general contractor or construction manager shall maintain a secure and clean working environment before, during and after the installation.

D. Maintain a stable room temperature of at least 65°F for a minimum of one (1) week prior to, during and thereafter installation.

E. An effective low-permeance vapor barrier is placed directly beneath the concrete subfloor. For "on" or "below grade" installations, it is recommended to provide a permanent vapor barrier resistant to long term hydrostatic pressure/moisture exposure. Protrusions should be sealed to prevent moisture migration into the slab. Moisture should not be allowed to enter the slab after the completed construction.

F. Concrete subfloor surface pH level within the 7 to 11 range dependent upon installation type.

G. Concrete subfloor should be no greater than 1/8" within a 10 ft diameter. This tolerance can be measured in accordance with ASTM E1155. A specified (F_F) of 50 and an (F_L) of 30 should reach this degree of floor flatness and floor level. There is no numerical correlation between F numbers and the deviation from the straight

edge. However, the above specified numbers should achieve a flat floor with minimal deviation in the slab. Reference ACI 117 and ACI 302.1R. The general contractor should provide a certificate of compliance with the above recommendations.

H. Concrete subfloor must be clean and free of all foreign materials or objects including, but not limited to, curing compounds and sealers.

I. Fill cracks, grooves, voids, depressions, and other minor imperfections. Follow the manufacturer's directions. Moveable joints must be treated utilizing specific transitioning joint devices depending upon the architect's recommendations. Follow current ASTM F710 guidelines for the preparation of concrete slabs to receive resilient flooring.

J. Refer to ACI 302.2R "Guidelines for Concrete Slabs that Receive Moisture-Sensitive Flooring Materials" for concrete design and construction.

K. Concrete slab shall be fortified with continual steel reinforcement. Fiber reinforcement alone shall not be considered adequate fortification.

1.6 *WARRANTY*

A. Special Limited Warranty:
   1. Manufacturer's standard form in which manufacturer agrees to repair or replace sports flooring including labor that fails within specified warranty period.

B. Material warranty must be direct from the product manufacturer.
   1. Material warranties must come from original manufacturer or division thereof. Private label warranties from distributors or brokers are not valid. Supply original point of manufacturing upon request.

C. Failures include, but are not limited to, the following:
   1. Material manufacturing defects.
   2. Surface wear and deterioration to the point of wear-through of wear layer per ASTM F410/ASTM F1303.
   3. Failure due to substrate moisture exposure exceeding 98 percent relative humidity when tested according to ASTM F2170.

D. Warranty Period:
   1. For material defects and surface wear-through: **25** years from date of substantial completion.
   2. For moisture vapor tolerance: **25** years from date of substantial completion.

E. Installer's Limited Warranty:
   1. Installer's standard form in which installer agrees to repair or replace sports flooring that fails due to poor workmanship or faulty installation within the specified warranty period.
   2. Warranty Period: 2 years from date of substantial completion.

1.7 *ADDITIONAL MATERIALS*

A. Furnish to the owner additional materials containing a total of at least 1% of each different color or design of the indoor resilient athletic surfacing used on the project.

1.8 *LEED™ CERTIFICATION*

A. The indoor resilient athletic surfacing should be able to help this facility to achieve points towards *LEED™ certification.* Flooring system must be certified by FloorScore.
B. LEED categories positively affected by the indoor resilient athletic surfacing:

LEED™ V4 Credit		Contribution
Materials & Resources: Building Product Disclosure & Optimization (BPDO)		
MRc3: Sourcing of Raw Materials	Options 1 & 2	2 Points
MRc4: Material Ingredients	Option 1	1 Point
MRc5: Construction and Demolition Management	Reclamation and Recycling	ReStart® Program
Indoor Environmental Quality		
EQc2: Low-Emitting Materials	TVOC: 0.5 mg/m3 or less	FloorScore®

PART 2 - PRODUCTS

2.1 *MANUFACTURERS*

A. The basis of the design for the indoor resilient multipurpose surfacing is Omnisports PurePlay as manufactured by Tarkett.
B. All other installation accessories and related components must be either made or approved by the indoor resilient athletic surfacing manufacturer.
C. Other products may be approved as equal if deemed qualified and submitted in accordance with the General Conditions.
D. Test reports confirming compliance from an independent sports laboratory must be provided along with samples, technical data, installation, maintenance, and warranty prior to acceptance as an alternative product.

2.2 *MATERIALS*

A. Omnisports PurePlay - Prefabricated sport surface 9.4 mm (3/8”) with wood flooring design and slightly textured embossed surface as supplied by Tarkett.
   1. Embossing of wood design and solid colors must be the same; varying embossing or surface textures will not be allowed.
   2. Printing of wood design shall closely resemble standard wood strip flooring in size, color, board length, and grain appearance.
   3. The wood design shall be protected by a clear layer of pure PVC (Polyvinyl Chloride) and TopClean xp, a factory-applied UV cured urethane treatment.
   4. Intermediate layers shall be fortified with a non-woven fiberglass grid for increased dimensional stability.
   5. The foam force reduction layer shall be high-density closed cell PVC foam with honeycomb embossing, and is applied in one continuous manufacturing process.
   6. Laminated or adhered foam layers will not be allowed.
   7. Field constructed products will not be accepted.

A. Physical properties of the indoor resilient athletic surfacing shall conform to the following minimums:

Width	—	6’ 6” (2 m)
Length	—	85’ (25.9m) approx.
Wear Layer	—	2 mm
Total Thickness	—	9.4 mm
Wear Layer	Type 1– Grade 1	ASTM F1303/F410
Vertical Deformation	PASSED	ASTM F2772
Rolling Load	PASSED	0.30 (EN 1569 {11/1999})
Surface Finish Effect	PASSED	ASTM F2772 (80 – 110)
Chemical Resistance	Excellent	ASTM F925
Impact Resistance	PASSED	EN 1517
Abrasion Resistance	PASSED	0.10 (EN ISO 5470-1 {06/1999})
Static Load Limit	PASSED	ASTM F970- Load 175 Lbs
Sound Insulation	Excellent	+/= 19 dB (ISO 717/2)
In-Room Sound Insulation	Excellent	61dB (NF S31-074)
Ball Rebound	PASSED	ASTM F2772 > 90%
Force Reduction	PASSED	ASTM F2772 Class 3
Fire Rating	PASSED	ASTM E648 Class 1
Microbial Assays Test	No Growth	G21 ASTM - Backing
Asthma and Allergy Friendly™	ASP: 05-01/101	Certified Compliant
Phthalate-free technology	—	YES
REACH Compliant	—	YES
Heavy Metals	—	NO
ISO 9001	—	YES
ISO 14001	—	YES

1. Color: As available from the indoor resilient athletic surfacing manufacturer’s standard range.
2. Hardwood Design Series: High definition printing for a realistic wood surface appearance as available from the indoor resilient athletic surfacing manufacturer’s standard range.
3. Texture: Texture to remain consistent between solid colors and wood design when blending colors.

C. Tarkolay – A high quality low permeance slip sheet vapor retarder designed to separate the installed system from the substrate below.
1. Tarkolay as manufactured by Tarkett can be used below, on, or above grade substrates that experience elevated moisture conditions.
2. Moisture tolerances shall have no limitation per ASTM F2170. Physical properties of the indoor resilient athletic surfacing shall conform to the following minimums:

Width	—	6’ 6” (2 m)
Length	—	147’7”’ (45 m) approx.
Total Thickness	—	1.3 mm
Dimensional Stability	PASSED	.01% (EN 1434)
Permeance	Excellent	<0.20 (ASTM E96

D. Welding Rod: As supplied by the indoor resilient athletic surfacing manufacturer or supplier.
   1. Color to blend with the indoor resilient athletic surfacing color or design.
   2. All seams shall be welded to create a monolithic and impermeable surface.
E. Adhesive: As approved by the indoor resilient athletic surfacing manufacturer.
F. Game Line Paint and Primer: As approved by the indoor resilient athletic surfacing manufacturer.

PART 3 - EXECUTION

3.1 *EXAMINATION*

A. It is the responsibility of the general contractor/construction manager to ensure that project/site conditions are acceptable for the installation of the indoor resilient athletic flooring.
B. Verify that the area in which the indoor resilient athletic surfacing will be installed is dry and weather tight. Verify that permanent heat, light and ventilation are installed and operable.
C. Verify that all other work that could cause damage, dirt and dust or interrupt the normal pace of the indoor resilient athletic flooring installation is completed or suspended.
D. Verify that there is a stable room temperature of at least 65◦F.
E. Verify that there are no foreign materials or objects on the subfloor and that the subfloor is clean and ready for installation.
F. *Installation with Tarkolay to Concrete Subfloor : moisture content no limitation when tested per ASTM F2170.*
G. Follow Fieldturf USA, Inc. installation recommendations.
H. Do not average the results of the tests. Report all field test results in writing to the General Contractor, Architect, and End User prior to installation.
I. Verify that the concrete subfloor surface pH level is within the 7 - 11 range.
J. Document the results indicating the slab is within manufacturer's tolerances for slab deviation.

3.2 *PREPARATION OF SURFACES*

A. Sand the entire surface of the concrete slab.
B. Sweep the concrete slab so as to remove all dirt and dust. If a sweeping compound is to be used it must be a sweeping compound that does not contain oil or other items that may inhibit the adhesive bond.
C. Slab must be dust free. In the event that dust impairs adhesive bond, priming the slab prior to application of adhesive may be necessary. Follow installation guidelines.
D. Follow OSHA guidelines.

3.3 *INSTALLATION*

A. The installation area shall be closed to all traffic and activity for a period to be set by the indoor resilient athletic surfacing installer. The indoor resilient athletic surfacing installation shall not begin until the installer is familiar with the existing conditions.
B. All necessary precautions should be taken to minimize noise, smell, dust, the use of hazardous materials and any other items that may inconvenience others.
C. Install the indoor resilient athletic surfacing in strict accordance with the indoor resilient athletic surfacing manufacturer's written instructions.
D. Install the indoor resilient athletic surfacing minimizing cross seams. Provide a seam diagram during the submittal process for approval prior to installation. Vinyl Sheet Flooring Seams: Comply with ASTM F 1516. Rout joints and heat weld to permanently and seamlessly fuse sections together.
E. Paint game lines using approved game line paint primer and game line paint in strict accordance with the game line paint manufacturer's instructions.
F. Install appropriate threshold plates or transition strips where necessary.

3.5 *CLEANING*

A. Remove all unused materials, tools, and equipment and dispose of any debris properly. Clean the indoor resilient athletic surfacing in accordance with the manufacturer's instructions.

3.6 *PROTECTION*

A. If required, protect the indoor resilient athletic surfacing from damage using coverings approved by the manufacturer until acceptance of work by the customer or their authorized representative.

3.7 *RELATED STANDARDS AND GUIDELINES*

A. ASTM F2170 "Standard Test Method for Determining Relative Humidity In Concrete Floor Slabs Using In-Situ Probes"
B. ASTM F710 "Standard Practice for Preparing Concrete Floors to Receive Resilient Flooring"
C. ACI 302.2R-06 "Guideline for Concrete Slabs that Receive Moisture-Sensitive Flooring Materials"
D. ASTM F2772-11 "Standard Specification for Athletic Performance Properties of Indoor Sports Floor Systems"

END OF SECTION

SECTION 09 65 66
ARCHITECTURAL SPECIFICATIONS FOR INDOOR RESILIENT ATHLETIC SURFACING

PART 1 – GENERAL

1.1 *SECTION INCLUDES*

A. Supply and installation of the indoor resilient multipurpose surfacing
B. Application of the game lines
C. References for the correct construction and preparation of concrete slabs to receive resilient flooring.

1.2 *SUBMITTALS*

A. Product Data:
   1. Manufacturer's promotional brochures, specifications and installation instructions
B. Manufacturer Certifications:
   1. Provide certification that accurately identifies the Original Equipment Manufacturer (OEM) of flooring furnished for this project including manufacturer's name, address and factory location.
   2. Suppliers of private label flooring for this project must identify themselves as such and fully disclose the OEM information listed above.
   3. All "manufacturer" requirements in these specifications must be complied with by the OEM, including warranties, certifications, qualifications, product data, test results, environmental requirements, performance data, etc.
C. Samples:
   1. Submit for selection and approval three (3) sets of the indoor resilient multipurpose surfacing, manufacturer's brochures, samples or sample boards of all of the available colors, textures and styles.
   2. Submit color samples of all the available game line paint colors for selection and approval.
D. Closeout Submittals:
   1. Submit three (3) copies of the indoor resilient multipurpose surfacing and manufacturer's maintenance instructions.
   2. Submit three (3) copies of the material and installation warranties as specified.

1.3 *QUALITY ASSURANCE*

A. Qualifications:
   1. The indoor resilient multipurpose surfacing shall have been actively marketed for a minimum of ten (10) years.
   2. The indoor resilient multipurpose surfacing shall be manufactured in an ISO 9001 certified plant.
   3. The indoor resilient multipurpose surfacing shall be manufactured in an ISO 14001 certified plant.
   4. The indoor resilient multipurpose surfacing supplier shall be an established firm, experienced in the field, and competent in the techniques required by the manufacturer.
   5. The installer of the indoor resilient multipurpose surfacing shall have a minimum of five (5) years of experience in the field installing indoor resilient multipurpose surfacing and have worked on at least five (5) projects of similar size, type and complexity.

B. Certifications:
   1. Installer to submit the indoor resilient athletic surfacing manufacturer's or distributor's certification attesting that they are an approved installer of the indoor resilient multipurpose surfacing.
   2. The ind**o**or resilient multipurpose surfacing manufacturer to submit official ISO 9001 certification for the facility in which the indoor resilient multipurpose surfacing is manufactured.

C. Testing:
   Tests shall be relative for multi-purpose use with certificates from independent testing resources to be made available upon request. Test results shall be performed according to ASTM standard testing procedures including ASTM F2772 "Standard Specification for Athletic Performance Properties of Indoor Sports Floor Systems".

1.4 *DELIVERY, STORAGE AND HANDLING*

A. Delivery:
   Material shall not be delivered until all related work is in place and finished and/or proper storage facilities and conditions can be provided and guaranteed stable according to FieldTurf USA, Inc. recommendations.

B. Storage:
   1. Store the material in a secure, clean and dry location.
   2. Maintain temperature between 55° and 85° Fahrenheit.
   3. Store the indoor resilient athletic surfacing rolls in an upright position on a smooth flat surface immediately upon delivery to jobsite.
   4. Rolls shipped in rigid protective cardboard containers can be laid horizontally prior to unpacking and installation.

1.5 *PROJECT/SITE CONDITIONS*

A. It is the responsibility of the general contractor/construction manager to maintain project/site conditions acceptable for the installation of the indoor resilient multipurpose flooring.

B. The area in which the indoor resilient multipurpose surfacing will be installed shall be dry and weather tight. Permanent heat, light and ventilation shall be installed and operable.

C. All other trades shall have completed their work prior to the installation of the resilient athletic flooring. The general contractor or construction manager shall maintain a secure and clean working environment before, during and after the installation.

D. Maintain a stable room temperature of at least 65°F for a minimum of one (1) week prior to, during and thereafter installation.

E. An effective low-permeance vapor barrier is placed directly beneath the concrete subfloor. For "on" or "below grade" installations, it is recommended to provide a permanent vapor barrier resistant to long term hydrostatic pressure/moisture exposure. Protrusions should be sealed to prevent moisture migration into the slab. Moisture should not be allowed to enter the slab after the completed construction.

F. Concrete subfloor surface pH level within the 7 to 11 range dependent upon installation type.

G. Concrete subfloor should be no greater than 1/8" within a 10 ft diameter. This tolerance can be measured in accordance with ASTM E1155. A specified (F_F) of 50 and an (F_L) of 30 should reach this degree of floor flatness and floor level. There is no numerical correlation between F numbers and the deviation from the straight

edge. However, the above specified numbers should achieve a flat floor with minimal deviation in the slab. Reference ACI 117 and ACI 302.1R. The general contractor should provide a certificate of compliance with the above recommendations.

H. Concrete subfloor must be clean and free of all foreign materials or objects including, but not limited to, curing compounds and sealers.

I. Fill cracks, grooves, voids, depressions, and other minor imperfections. Follow the manufacturer's directions. Moveable joints must be treated utilizing specific transitioning joint devices depending upon the architect's recommendations. Follow current ASTM F710 guidelines for the preparation of concrete slabs to receive resilient flooring.

J. Refer to ACI 302.2R "Guidelines for Concrete Slabs that Receive Moisture-Sensitive Flooring Materials" for concrete design and construction.

K. Concrete slab shall be fortified with continual steel reinforcement. Fiber reinforcement alone shall not be considered adequate fortification.

1.6 *WARRANTY*

A. Special Limited Warranty:
   1. Manufacturer's standard form in which manufacturer agrees to repair or replace sports flooring including labor that fails within specified warranty period.

B. Material warranty must be direct from the product manufacturer.
   1. Material warranties must come from original manufacturer or division thereof. Private label warranties from distributors or brokers are not valid. Supply original point of manufacturing upon request.

C. Failures include, but are not limited to, the following:
   1. Material manufacturing defects.
   2. Surface wear and deterioration to the point of wear-through of wear layer per ASTM F410/ASTM F1303.
   3. Failure due to substrate moisture exposure exceeding 98 percent relative humidity when tested according to ASTM F2170.

D. Warranty Period:
   1. <u>For material defects and surface wear-through:</u> **25** years from date of substantial completion.
   2. <u>For moisture vapor tolerance:</u> **25** years from date of substantial completion.

E. Installer's Limited Warranty:
   1. Installer's standard form in which installer agrees to repair or replace sports flooring that fails due to poor workmanship or faulty installation within the specified warranty period.
   2. Warranty Period: 2 years from date of substantial completion.

1.7 *ADDITIONAL MATERIALS*

A. Furnish to the owner additional materials containing a total of at least 1% of each different color or design of the indoor resilient athletic surfacing used on the project.

1.8 *LEED™ CERTIFICATION*

A. The indoor resilient athletic surfacing should be able to help this facility to achieve points towards *LEED™ certification.* Flooring system must be certified by FloorScore.
B. LEED categories positively affected by the indoor resilient athletic surfacing:

LEED™ V4 Credit		Contribution
Materials & Resources: Building Product Disclosure & Optimization (BPDO)		
MRc3: Sourcing of Raw Materials	Options 1 & 2	2 Points
MRc4: Material Ingredients	Option 1	1 Point
MRc5: Construction and Demolition Management	Reclamation and Recycling	ReStart® Program
Indoor Environmental Quality		
EQc2: Low-Emitting Materials	TVOC: 0.5 mg/m3 or less	FloorScore®

PART 2 - PRODUCTS

2.1 *MANUFACTURERS*

A. The basis of the design for the indoor resilient multipurpose surfacing is Omnisports Speed as manufactured by Tarkett.
B. All other installation accessories and related components must be either made or approved by the indoor resilient athletic surfacing manufacturer.
C. Other products may be approved as equal if deemed qualified and submitted in accordance with the General Conditions.
D. Test reports confirming compliance from an independent sports laboratory must be provided along with samples, technical data, installation, maintenance, and warranty prior to acceptance as an alternative product.

2.2 *MATERIALS*

A. Omnisports Speed - Prefabricated sport surface (0.14”) with wood flooring design, single surface embossing and Extreme Three (3) Layers technology (X3LT) as supplied by Tarkett.
   1. Embossing of wood design and solid colors must be the same; varying embossing or surface textures will not be allowed.
   2. Printing of wood design shall closely resemble standard wood strip flooring in size, color, board length, and grain appearance.
   3. Surface embossing combined with TopClean XP must offer proper balance of surface friction per the ASTM F2772.
   4. Surface embossing combined with TopClean XP must provide resistance to stains and scratches. Surface profile must not incorporate linear embossing.
   5. The wood design shall be protected by a clear layer of pure PVC (Polyvinyl Chloride) and TopClean XP, a factory-applied UV cured urethane treatment.
   6. Extreme Three (3) Layers technology (X3LT) includes Omnisports XCS cushion, glass veil and calendared sheet must offer improved shock absorbing comfort while providing better indentation recovery

7. The XCS cushion force reduction layer shall be high-density closed cell PVC foam with honeycomb embossing, and is applied in one continuous manufacturing process.
8. Laminated or adhered foam layers will not be allowed.
9. Field constructed products will not be accepted.

B. Physical properties of the indoor resilient athletic surfacing shall conform to the following minimums:

Width	—	6’ 6” (2 m)
Length	—	75.5’ (23m) approx.
Wear Layer	—	2 mm
Total Thickness	—	3.5 mm
Wear Layer	Type 1– Grade 1	ASTM F1303/F410
Vertical Deformation	PASSED	ASTM F2772
Rolling Load	PASSED	0.30 (EN 1569 {11/1999})
Surface Finish Effect	PASSED	ASTM F2772 (80 – 110)
Chemical Resistance	Excellent	ASTM F925
Impact Resistance	PASSED	EN 1517
Abrasion Resistance	PASSED	0.10 (EN ISO 5470-1 {06/1999})
Static Load Limit	PASSED	ASTM F970- Load 175 Lbs
Sound Insulation	Excellent	+/= 19 dB (ISO 717/2)
In-Room Sound Insulation	Excellent	62dB (NF S31-074)
Ball Rebound	PASSED	ASTM F2772 > 90%
Force Reduction	PASSED	ASTM F2772 Class 1
Fire Rating	PASSED	ASTM E648 Class 1
Microbial Assays Test	No Growth	G21 ASTM - Backing
Phthalate-free technology	—	YES
REACH Compliant	—	YES
Heavy Metals	—	NO
ISO 9001	—	YES
ISO 14001	—	YES

1. Color: As available from the indoor resilient athletic surfacing manufacturer’s standard range.
2. Hardwood Design Series: High definition printing for a realistic wood surface appearance as available from the indoor resilient athletic surfacing manufacturer’s standard range.
3. Texture: Texture to remain consistent between solid colors and wood design when blending colors.

C. Welding Rod: As supplied by the indoor resilient athletic surfacing manufacturer or supplier.
   1. Color to blend with the indoor resilient athletic surfacing color or design.
   2. All seams shall be welded to create a monolithic and impermeable surface.

D. Adhesive: As approved by the indoor resilient athletic surfacing manufacturer.

E. Game Line Paint and Primer: As approved by the indoor resilient athletic surfacing manufacturer.

PART 3 - EXECUTION

3.1 *EXAMINATION*

A. It is the responsibility of the general contractor/construction manager to ensure that project/site conditions are acceptable for the installation of the indoor resilient athletic flooring.
B. Verify that the area in which the indoor resilient athletic surfacing will be installed is dry and weather tight. Verify that permanent heat, light and ventilation are installed and operable.
C. Verify that all other work that could cause damage, dirt and dust or interrupt the normal pace of the indoor resilient athletic flooring installation is completed or suspended.
D. Verify that there is a stable room temperature of at least 65◦F.
E. Verify that there are no foreign materials or objects on the subfloor and that the subfloor is clean and ready for installation.
F. *Direct Full Spread Adhering to Concrete Subfloor HS Sports Spray : moisture content less than 90% RH when tested per ASTM F2170.*
G. Follow Fieldturf USA, Inc. installation recommendations.
H. Do not average the results of the tests. Report all field test results in writing to the General Contractor, Architect, and End User prior to installation.
I. Verify that the concrete subfloor surface pH level is within the 7 - 11 range.
J. Document the results confirming the slab is within manufacturer's tolerances for slab deviation.

3.2 *PREPARATION OF SURFACES*

A. Sand the entire surface of the concrete slab.
B. Sweep the concrete slab so as to remove all dirt and dust. If a sweeping compound is to be used it must be a sweeping compound that does not contain oil or other items that may inhibit the adhesive bond.
C. Slab must be dust free. In the event that dust impairs adhesive bond, priming the slab prior to application of adhesive may be necessary. Follow installation guidelines.
D. Follow OSHA guidelines.

3.3 *INSTALLATION*

A. The installation area shall be closed to all traffic and activity for a period to be set by the indoor resilient athletic surfacing installer. The indoor resilient athletic surfacing installation shall not begin until the installer is familiar with the existing conditions.
B. All necessary precautions should be taken to minimize noise, smell, dust, the use of hazardous materials and any other items that may inconvenience others.
C. Install the indoor resilient athletic surfacing in strict accordance with the indoor resilient athletic surfacing manufacturer's written instructions.
D. Install the indoor resilient athletic surfacing minimizing cross seams. Provide a seam diagram during the submittal process for approval prior to installation. Vinyl Sheet Flooring Seams: Comply with ASTM F 1516. Rout joints and heat weld to permanently and seamlessly fuse sections together.
E. Paint game lines using approved game line paint primer and game line paint in strict accordance with the game line paint manufacturer's instructions.
F. Install appropriate threshold plates or transition strips where necessary.

3.5 *CLEANING*

A. Remove all unused materials, tools, and equipment and dispose of any debris properly. Clean the indoor resilient athletic surfacing in accordance with the manufacturer's instructions.

3.6 *PROTECTION*

A. If required, protect the indoor resilient athletic surfacing from damage using coverings approved by the manufacturer until acceptance of work by the customer or their authorized representative.

3.7 *RELATED STANDARDS AND GUIDELINES*

A. ASTM F2170 "Standard Test Method for Determining Relative Humidity In Concrete Floor Slabs Using In-Situ Probes"
B. ASTM F710 "Standard Practice for Preparing Concrete Floors to Receive Resilient Flooring"
C. ACI 302.2R-06 "Guideline for Concrete Slabs that Receive Moisture-Sensitive Flooring Materials"
D. ASTM F2772-11 "Standard Specification for Athletic Performance Properties of Indoor Sports Floor Systems"

END OF SECTION

SECTION 09 65 66
ARCHITECTURAL SPECIFICATIONS FOR INDOOR RESILIENT ATHLETIC SURFACING

PART 1 – GENERAL

1.1 *SECTION INCLUDES*

A. Supply and installation of the indoor resilient multipurpose surfacing
B. Application of the game lines
C. References for the correct construction and preparation of concrete slabs to receive resilient flooring.

1.2 *SUBMITTALS*

A. Product Data:
   1. Manufacturer's promotional brochures, specifications and installation instructions
B. Manufacturer Certifications:
   1. Provide certification that accurately identifies the Original Equipment Manufacturer (OEM) of flooring furnished for this project including manufacturer's name, address and factory location.
   2. Suppliers of private label flooring for this project must identify themselves as such and fully disclose the OEM information listed above.
   3. All "manufacturer" requirements in these specifications must be complied with by the OEM, including warranties, certifications, qualifications, product data, test results, environmental requirements, performance data, etc.
C. Samples:
   1. Submit for selection and approval three (3) sets of the indoor resilient multipurpose surfacing, manufacturer's brochures, samples or sample boards of all of the available colors, textures and styles.
   2. Submit color samples of all the available game line paint colors for selection and approval.
D. Closeout Submittals:
   1. Submit three (3) copies of the indoor resilient multipurpose surfacing and manufacturer's maintenance instructions.
   2. Submit three (3) copies of the material and installation warranties as specified.

1.3 *QUALITY ASSURANCE*

A. Qualifications:
   1. The indoor resilient multipurpose surfacing shall have been actively marketed for a minimum of ten (10) years in the country.
   2. The indoor resilient multipurpose surfacing shall be manufactured in an ISO 9001 certified plant.
   3. The indoor resilient multipurpose surfacing shall be manufactured in an ISO 14001 certified plant.
   4. The indoor resilient multipurpose surfacing supplier shall be an established firm, experienced in the field, and competent in the techniques required by the manufacturer.
   5. The installer of the indoor resilient multipurpose surfacing shall have a minimum of five (5) years of experience in the field installing indoor resilient multipurpose surfacing and have worked on at least five (5) projects of similar size, type and complexity.

B. Certifications:
   1. Installer to submit the indoor resilient athletic surfacing manufacturer's or distributor's certification attesting that they are an approved installer of the indoor resilient multipurpose surfacing.
   2. The ind**o**or resilient multipurpose surfacing manufacturer to submit official ISO 9001 certification for the facility in which the indoor resilient multipurpose surfacing is manufactured.

C. Testing:
   Tests shall be relative for multi-purpose use with certificates from independent testing resources to be made available upon request. Test results shall be performed according to ASTM standard testing procedures including ASTM F2772 "Standard Specification for Athletic Performance Properties of Indoor Sports Floor Systems".

1.4 *DELIVERY, STORAGE AND HANDLING*

A. Delivery:
   Material shall not be delivered until all related work is in place and finished and/or proper storage facilities and conditions can be provided and guaranteed stable according to FieldTurf USA, Inc. recommendations.

B. Storage:
   1. Store the material in a secure, clean and dry location.
   2. Maintain temperature between 55° and 85° Fahrenheit.
   3. Store the indoor resilient athletic surfacing rolls in an upright position on a smooth flat surface immediately upon delivery to jobsite.
   4. Rolls shipped in rigid protective cardboard containers can be laid horizontally prior to unpacking and installation.

1.5 *PROJECT/SITE CONDITIONS*

A. It is the responsibility of the general contractor/construction manager to maintain project/site conditions acceptable for the installation of the indoor resilient multipurpose flooring.

B. The area in which the indoor resilient multipurpose surfacing will be installed shall be dry and weather tight. Permanent heat, light and ventilation shall be installed and operable.

C. All other trades shall have completed their work prior to the installation of the resilient athletic flooring. The general contractor or construction manager shall maintain a secure and clean working environment before, during and after the installation.

D. Maintain a stable room temperature of at least 65°F for a minimum of one (1) week prior to, during and thereafter installation.

E. An effective low-permeance vapor barrier is placed directly beneath the concrete subfloor. For "on" or "below grade" installations, it is recommended to provide a permanent vapor barrier resistant to long term hydrostatic pressure/moisture exposure. Protrusions should be sealed to prevent moisture migration into the slab. Moisture should not be allowed to enter the slab after the completed construction.

F. Concrete subfloor surface pH level within the 7 to 11 range dependent upon installation type.

G. Concrete subfloor should be no greater than 1/8" within a 10 ft diameter. This tolerance can be measured in accordance with ASTM E1155. A specified (F_F) of 50 and an (F_L) of 30 should reach this degree of floor flatness and floor level. There is no numerical correlation between F numbers and the deviation from the straight

edge. However, the above specified numbers should achieve a flat floor with minimal deviation in the slab. Reference ACI 117 and ACI 302.1R. The general contractor should provide a certificate of compliance with the above recommendations.

H. Concrete subfloor must be clean and free of all foreign materials or objects including, but not limited to, curing compounds and sealers.

I. Fill cracks, grooves, voids, depressions, and other minor imperfections. Follow the manufacturer's directions. Moveable joints must be treated utilizing specific transitioning joint devices depending upon the architect's recommendations. Follow current ASTM F710 guidelines for the preparation of concrete slabs to receive resilient flooring.

J. Refer to ACI 302.2R "Guidelines for Concrete Slabs that Receive Moisture-Sensitive Flooring Materials" for concrete design and construction.

K. Concrete slab shall be fortified with continual steel reinforcement. Fiber reinforcement alone shall not be considered adequate fortification.

1.6 *WARRANTY*

A. Special Limited Warranty:
   1. Manufacturer's standard form in which manufacturer agrees to repair or replace sports flooring including labor that fails within specified warranty period.

B. Material warranty must be direct from the product manufacturer.
   1. Material warranties must come from original manufacturer or division thereof. Private label warranties from distributors or brokers are not valid. Supply original point of manufacturing upon request.

C. Failures include, but are not limited to, the following:
   1. Material manufacturing defects.
   2. Surface wear and deterioration to the point of wear-through of wear layer per ASTM F410/ASTM F1303.
   3. Failure due to substrate moisture exposure exceeding 98 percent relative humidity when tested according to ASTM F2170.

D. Warranty Period:
   1. For material defects and surface wear-through: **25** years from date of substantial completion.
   2. For moisture vapor tolerance: **25** years from date of substantial completion.

E. Installer's Limited Warranty:
   1. Installer's standard form in which installer agrees to repair or replace sports flooring that fails due to poor workmanship or faulty installation within the specified warranty period.
   2. Warranty Period: 2 years from date of substantial completion.

1.7 *ADDITIONAL MATERIALS*

A. Furnish to the owner additional materials containing a total of at least 1% of each different color or design of the indoor resilient athletic surfacing used on the project.

1.8 *LEED™ CERTIFICATION*

A. The indoor resilient athletic surfacing should be able to help this facility to achieve points towards *LEED™ certification.* Flooring system must be certified by FloorScore.
B. LEED categories positively affected by the indoor resilient athletic surfacing:

LEED™ V4 Credit		Contribution
Materials & Resources: Building Product Disclosure & Optimization (BPDO)		
MRc3: Sourcing of Raw Materials	Options 1 & 2	2 Points
MRc4: Material Ingredients	Option 1	1 Point
MRc5: Construction and Demolition Management	Reclamation and Recycling	ReStart® Program
Indoor Environmental Quality		
EQc2: Low-Emitting Materials	TVOC: 0.5 mg/m3 or less	FloorScore®

PART 2 - PRODUCTS

2.1 *MANUFACTURERS*

A. The basis of the design for the indoor resilient multipurpose surfacing is Omnisports Speed as manufactured by Tarkett.
B. All other installation accessories and related components must be either made or approved by the indoor resilient athletic surfacing manufacturer.
C. Other products may be approved as equal if deemed qualified and submitted in accordance with the General Conditions.
D. Test reports confirming compliance from an independent sports laboratory must be provided along with samples, technical data, installation, maintenance, and warranty prior to acceptance as an alternative product.

2.2 *MATERIALS*

A. Omnisports Speed - Prefabricated sport surface (0.14”) with wood flooring design, single surface embossing and Extreme Three (3) Layers technology (X3LT) as supplied by Tarkett.
   1. Embossing of wood design and solid colors must be the same; varying embossing or surface textures will not be allowed.
   2. Printing of wood design shall closely resemble standard wood strip flooring in size, color, board length, and grain appearance.
   3. Surface embossing combined with TopClean XP must offer proper balance of surface friction per the ASTM F2772.
   4. Surface embossing combined with TopClean XP must provide resistance to stains and scratches. Surface profile must not incorporate linear embossing.
   5. The wood design shall be protected by a clear layer of pure PVC (Polyvinyl Chloride) and TopClean XP, a factory-applied UV cured urethane treatment.
   6. Extreme Three (3) Layers technology (X3LT) includes Omnisports XCS cushion, glass veil and calendared sheet must offer improved shock absorbing comfort while providing better indentation recovery

7. The XCS cushion force reduction layer shall be high-density closed cell PVC foam with honeycomb embossing, and is applied in one continuous manufacturing process.
8. Laminated or adhered foam layers will not be allowed.
9. Field constructed products will not be accepted.

B. Physical properties of the indoor resilient athletic surfacing shall conform to the following minimums:

Width	—	6’ 6” (2 m)
Length	—	75.5’ (23m) approx.
Wear Layer	—	2 mm
Total Thickness	—	3.5 mm
Wear Layer	Type 1– Grade 1	ASTM F1303/F410
Vertical Deformation	PASSED	ASTM F2772
Rolling Load	PASSED	0.30 (EN 1569 {11/1999})
Surface Finish Effect	PASSED	ASTM F2772 (80 – 110)
Chemical Resistance	Excellent	ASTM F925
Impact Resistance	PASSED	EN 1517
Abrasion Resistance	PASSED	0.10 (EN ISO 5470-1 {06/1999})
Static Load Limit	PASSED	ASTM F970- Load 175 Lbs
Sound Insulation	Excellent	+/= 19 dB (ISO 717/2)
In-Room Sound Insulation	Excellent	62dB (NF S31-074)
Ball Rebound	PASSED	ASTM F2772 > 90%
Force Reduction	PASSED	ASTM F2772 Class 1
Fire Rating	PASSED	ASTM E648 Class 1
Microbial Assays Test	No Growth	G21 ASTM - Backing
Phthalate-free technology	—	YES
REACH Compliant	—	YES
Heavy Metals	—	NO
ISO 9001	—	YES
ISO 14001	—	YES

1. Color: As available from the indoor resilient athletic surfacing manufacturer’s standard range.
2. Hardwood Design Series: High definition printing for a realistic wood surface appearance as available from the indoor resilient athletic surfacing manufacturer’s standard range.
3. Texture: Texture to remain consistent between solid colors and wood design when blending colors.

C. Welding Rod: As supplied by the indoor resilient athletic surfacing manufacturer or supplier.
   1. Color to blend with the indoor resilient athletic surfacing color or design.
   2. All seams shall be welded to create a monolithic and impermeable surface.

D. Adhesive: As approved by the indoor resilient athletic surfacing manufacturer.

E. Game Line Paint and Primer: As approved by the indoor resilient athletic surfacing manufacturer.

PART 3 - EXECUTION

3.1 *EXAMINATION*

A. It is the responsibility of the general contractor/construction manager to ensure that project/site conditions are acceptable for the installation of the indoor resilient athletic flooring.
B. Verify that the area in which the indoor resilient athletic surfacing will be installed is dry and weather tight. Verify that permanent heat, light and ventilation are installed and operable.
C. Verify that all other work that could cause damage, dirt and dust or interrupt the normal pace of the indoor resilient athletic flooring installation is completed or suspended.
D. Verify that there is a stable room temperature of at least 65◦F.
E. Verify that there are no foreign materials or objects on the subfloor and that the subfloor is clean and ready for installation.
F. *Direct Full Spread Adhering to Concrete Subfloor Multi-Poxy : moisture content less than 98% RH when tested per ASTM F2170.*
G. Follow Fieldturf USA, Inc. installation recommendations.
H. Do not average the results of the tests. Report all field test results in writing to the General Contractor, Architect, and End User prior to installation.
I. Verify that the concrete subfloor surface pH level is within the 7 - 11 range.
J. Document the results confirming the slab is within manufacturer's tolerances for slab deviation.

3.2 *PREPARATION OF SURFACES*

A. Sand the entire surface of the concrete slab.
B. Sweep the concrete slab so as to remove all dirt and dust. If a sweeping compound is to be used it must be a sweeping compound that does not contain oil or other items that may inhibit the adhesive bond.
C. Slab must be dust free. In the event that dust impairs adhesive bond, priming the slab prior to application of adhesive may be necessary. Follow installation guidelines.
D. Follow OSHA guidelines.

3.3 *INSTALLATION*

A. The installation area shall be closed to all traffic and activity for a period to be set by the indoor resilient athletic surfacing installer. The indoor resilient athletic surfacing installation shall not begin until the installer is familiar with the existing conditions.
B. All necessary precautions should be taken to minimize noise, smell, dust, the use of hazardous materials and any other items that may inconvenience others.
C. Install the indoor resilient athletic surfacing in strict accordance with the indoor resilient athletic surfacing manufacturer's written instructions.
D. Install the indoor resilient athletic surfacing minimizing cross seams. Provide a seam diagram during the submittal process for approval prior to installation. Vinyl Sheet Flooring Seams: Comply with ASTM F 1516. Rout joints and heat weld to permanently and seamlessly fuse sections together.
E. Paint game lines using approved game line paint primer and game line paint in strict accordance with the game line paint manufacturer's instructions.
F. Install appropriate threshold plates or transition strips where necessary.

3.5 *CLEANING*

A. Remove all unused materials, tools, and equipment and dispose of any debris properly. Clean the indoor resilient athletic surfacing in accordance with the manufacturer's instructions.

3.6 *PROTECTION*

A. If required, protect the indoor resilient athletic surfacing from damage using coverings approved by the manufacturer until acceptance of work by the customer or their authorized representative.

3.7 *RELATED STANDARDS AND GUIDELINES*

A. ASTM F2170 "Standard Test Method for Determining Relative Humidity In Concrete Floor Slabs Using In-Situ Probes"
B. ASTM F710 "Standard Practice for Preparing Concrete Floors to Receive Resilient Flooring"
C. ACI 302.2R-06 "Guideline for Concrete Slabs that Receive Moisture-Sensitive Flooring Materials"
D. ASTM F2772-11 "Standard Specification for Athletic Performance Properties of Indoor Sports Floor Systems"

END OF SECTION

SECTION 09 65 66
ARCHITECTURAL SPECIFICATIONS FOR INDOOR RESILIENT ATHLETIC SURFACING

PART 1 – GENERAL

1.1 *SECTION INCLUDES*

A. Supply and installation of the indoor resilient multipurpose surfacing
B. Application of the game lines
C. References for the correct construction and preparation of concrete slabs to receive resilient flooring.

1.2 *SUBMITTALS*

A. Product Data:
   1. Manufacturer's promotional brochures, specifications and installation instructions
B. Manufacturer Certifications:
   1. Provide certification that accurately identifies the Original Equipment Manufacturer (OEM) of flooring furnished for this project including manufacturer's name, address and factory location.
   2. Suppliers of private label flooring for this project must identify themselves as such and fully disclose the OEM information listed above.
   3. All "manufacturer" requirements in these specifications must be complied with by the OEM, including warranties, certifications, qualifications, product data, test results, environmental requirements, performance data, etc.
C. Samples:
   1. Submit for selection and approval three (3) sets of the indoor resilient multipurpose surfacing, manufacturer's brochures, samples or sample boards of all of the available colors, textures and styles.
   2. Submit color samples of all the available game line paint colors for selection and approval.
D. Closeout Submittals:
   1. Submit three (3) copies of the indoor resilient multipurpose surfacing and manufacturer's maintenance instructions.
   2. Submit three (3) copies of the material and installation warranties as specified.

1.3 *QUALITY ASSURANCE*

A. Qualifications:
   1. The indoor resilient multipurpose surfacing shall have been actively marketed for a minimum of ten (10) years.
   2. The indoor resilient multipurpose surfacing shall be manufactured in an ISO 9001 certified plant.
   3. The indoor resilient multipurpose surfacing shall be manufactured in an ISO 14001 certified plant.
   4. The indoor resilient multipurpose surfacing supplier shall be an established firm, experienced in the field, and competent in the techniques required by the manufacturer.
   5. The installer of the indoor resilient multipurpose surfacing shall have a minimum of five (5) years of experience in the field installing indoor resilient multipurpose surfacing and have worked on at least five (5) projects of similar size, type and complexity.

B. Certifications:
   1. Installer to submit the indoor resilient athletic surfacing manufacturer's or distributor's certification attesting that they are an approved installer of the indoor resilient multipurpose surfacing.
   2. The ind**o**or resilient multipurpose surfacing manufacturer to submit official ISO 9001 certification for the facility in which the indoor resilient multipurpose surfacing is manufactured.

C. Testing:
   Tests shall be relative for multi-purpose use with certificates from independent testing resources to be made available upon request. Test results shall be performed according to ASTM standard testing procedures including ASTM F2772 "Standard Specification for Athletic Performance Properties of Indoor Sports Floor Systems".

1.4 *DELIVERY, STORAGE AND HANDLING*

A. Delivery:
   Material shall not be delivered until all related work is in place and finished and/or proper storage facilities and conditions can be provided and guaranteed stable according to FieldTurf USA, Inc. recommendations.

B. Storage:
   1. Store the material in a secure, clean and dry location.
   2. Maintain temperature between 55° and 85° Fahrenheit.
   3. Store the indoor resilient athletic surfacing rolls in an upright position on a smooth flat surface immediately upon delivery to jobsite.
   4. Rolls shipped in rigid protective cardboard containers can be laid horizontally prior to unpacking and installation.

1.5 *PROJECT/SITE CONDITIONS*

A. It is the responsibility of the general contractor/construction manager to maintain project/site conditions acceptable for the installation of the indoor resilient multipurpose flooring.

B. The area in which the indoor resilient multipurpose surfacing will be installed shall be dry and weather tight. Permanent heat, light and ventilation shall be installed and operable.

C. All other trades shall have completed their work prior to the installation of the resilient athletic flooring. The general contractor or construction manager shall maintain a secure and clean working environment before, during and after the installation.

D. Maintain a stable room temperature of at least 65°F for a minimum of one (1) week prior to, during and thereafter installation.

E. An effective low-permeance vapor barrier is placed directly beneath the concrete subfloor. For "on" or "below grade" installations, it is recommended to provide a permanent vapor barrier resistant to long term hydrostatic pressure/moisture exposure. Protrusions should be sealed to prevent moisture migration into the slab. Moisture should not be allowed to enter the slab after the completed construction.

F. Concrete subfloor surface pH level within the 7 to 11 range dependent upon installation type.

G. Concrete subfloor should be no greater than 1/8" within a 10 ft diameter. This tolerance can be measured in accordance with ASTM E1155. A specified (F_F) of 50 and an (F_L) of 30 should reach this degree of floor flatness and floor level. There is no numerical correlation between F numbers and the deviation from the straight

edge. However, the above specified numbers should achieve a flat floor with minimal deviation in the slab. Reference ACI 117 and ACI 302.1R. The general contractor should provide a certificate of compliance with the above recommendations.

H. Concrete subfloor must be clean and free of all foreign materials or objects including, but not limited to, curing compounds and sealers.

I. Fill cracks, grooves, voids, depressions, and other minor imperfections. Follow the manufacturer's directions. Moveable joints must be treated utilizing specific transitioning joint devices depending upon the architect's recommendations. Follow current ASTM F710 guidelines for the preparation of concrete slabs to receive resilient flooring.

J. Refer to ACI 302.2R "Guidelines for Concrete Slabs that Receive Moisture-Sensitive Flooring Materials" for concrete design and construction.

K. Concrete slab shall be fortified with continual steel reinforcement. Fiber reinforcement alone shall not be considered adequate fortification.

1.6 *WARRANTY*

A. Special Limited Warranty:
   1. Manufacturer's standard form in which manufacturer agrees to repair or replace sports flooring including labor that fails within specified warranty period.

B. Material warranty must be direct from the product manufacturer.
   1. Material warranties must come from original manufacturer or division thereof. Private label warranties from distributors or brokers are not valid. Supply original point of manufacturing upon request.

C. Failures include, but are not limited to, the following:
   1. Material manufacturing defects.
   2. Surface wear and deterioration to the point of wear-through of wear layer per ASTM F410/ASTM F1303.
   3. Failure due to substrate moisture exposure exceeding 98 percent relative humidity when tested according to ASTM F2170.

D. Warranty Period:
   1. <u>For material defects and surface wear-through:</u> **25** years from date of substantial completion.
   2. <u>For moisture vapor tolerance:</u> **25** years from date of substantial completion.

E. Installer's Limited Warranty:
   1. Installer's standard form in which installer agrees to repair or replace sports flooring that fails due to poor workmanship or faulty installation within the specified warranty period.
   2. Warranty Period: 2 years from date of substantial completion.

1.7 *ADDITIONAL MATERIALS*

A. Furnish to the owner additional materials containing a total of at least 1% of each different color or design of the indoor resilient athletic surfacing used on the project.

1.8 *LEED™ CERTIFICATION*

A. The indoor resilient athletic surfacing should be able to help this facility to achieve points towards *LEED™ certification.* Flooring system must be certified by FloorScore.
B. LEED categories positively affected by the indoor resilient athletic surfacing:

LEED™ V4 Credit		Contribution
Materials & Resources: Building Product Disclosure & Optimization (BPDO)		
MRc3: Sourcing of Raw Materials	Options 1 & 2	2 Points
MRc4: Material Ingredients	Option 1	1 Point
MRc5: Construction and Demolition Management	Reclamation and Recycling	ReStart® Program
Indoor Environmental Quality		
EQc2: Low-Emitting Materials	TVOC: 0.5 mg/m3 or less	FloorScore®

PART 2 - PRODUCTS

2.1 *MANUFACTURERS*

A. The basis of the design for the indoor resilient multipurpose surfacing is Omnisports Speed as manufactured by Tarkett.
B. All other installation accessories and related components must be either made or approved by the indoor resilient athletic surfacing manufacturer.
C. Other products may be approved as equal if deemed qualified and submitted in accordance with the General Conditions.
D. Test reports confirming compliance from an independent sports laboratory must be provided along with samples, technical data, installation, maintenance, and warranty prior to acceptance as an alternative product.

2.2 *MATERIALS*

A. Omnisports Speed - Prefabricated sport surface (0.14”) with wood flooring design, single surface embossing and Extreme Three (3) Layers technology (X3LT) as supplied by Tarkett.
   1. Embossing of wood design and solid colors must be the same; varying embossing or surface textures will not be allowed.
   2. Printing of wood design shall closely resemble standard wood strip flooring in size, color, board length, and grain appearance.
   3. Surface embossing combined with TopClean XP must offer proper balance of surface friction per the ASTM F2772.
   4. Surface embossing combined with TopClean XP must provide resistance to stains and scratches. Surface profile must not incorporate linear embossing.
   5. The wood design shall be protected by a clear layer of pure PVC (Polyvinyl Chloride) and TopClean XP, a factory-applied UV cured urethane treatment.
   6. Extreme Three (3) Layers technology (X3LT) includes Omnisports XCS cushion, glass veil and calendared sheet must offer improved shock absorbing comfort while providing better indentation recovery

7. The XCS cushion force reduction layer shall be high-density closed cell PVC foam with honeycomb embossing, and is applied in one continuous manufacturing process.
8. Laminated or adhered foam layers will not be allowed.
9. Field constructed products will not be accepted.

A. Physical properties of the indoor resilient athletic surfacing shall conform to the following minimums:

Width	—	6’ 6” (2 m)
Length	—	75.5’ (23m) approx.
Wear Layer	—	2 mm
Total Thickness	—	3.5 mm
Wear Layer	Type 1– Grade 1	ASTM F1303/F410
Vertical Deformation	PASSED	ASTM F2772
Rolling Load	PASSED	0.30 (EN 1569 {11/1999})
Surface Finish Effect	PASSED	ASTM F2772 (80 – 110)
Chemical Resistance	Excellent	ASTM F925
Impact Resistance	PASSED	EN 1517
Abrasion Resistance	PASSED	0.10 (EN ISO 5470-1 {06/1999})
Static Load Limit	PASSED	ASTM F970- Load 175 Lbs
Sound Insulation	Excellent	+/= 19 dB (ISO 717/2)
In-Room Sound Insulation	Excellent	62dB (NF S31-074)
Ball Rebound	PASSED	ASTM F2772 > 90%
Force Reduction	PASSED	ASTM F2772 Class 1
Fire Rating	PASSED	ASTM E648 Class 1
Microbial Assays Test	No Growth	G21 ASTM - Backing
Phthalate-free technology	—	YES
REACH Compliant	—	YES
Heavy Metals	—	NO
ISO 9001	—	YES
ISO 14001	—	YES

1. Color: As available from the indoor resilient athletic surfacing manufacturer’s standard range.
2. Hardwood Design Series: High definition printing for a realistic wood surface appearance as available from the indoor resilient athletic surfacing manufacturer’s standard range.
3. Texture: Texture to remain consistent between solid colors and wood design when blending colors.

C. Welding Rod: As supplied by the indoor resilient athletic surfacing manufacturer or supplier.
   1. Color to blend with the indoor resilient athletic surfacing color or design.
   2. All seams shall be welded to create a monolithic and impermeable surface.

D. Adhesive: As approved by the indoor resilient athletic surfacing manufacturer.

E. Game Line Paint and Primer: As approved by the indoor resilient athletic surfacing manufacturer.

PART 3 - EXECUTION

3.1 *EXAMINATION*

A. It is the responsibility of the general contractor/construction manager to ensure that project/site conditions are acceptable for the installation of the indoor resilient athletic flooring.
B. Verify that the area in which the indoor resilient athletic surfacing will be installed is dry and weather tight. Verify that permanent heat, light and ventilation are installed and operable.
C. Verify that all other work that could cause damage, dirt and dust or interrupt the normal pace of the indoor resilient athletic flooring installation is completed or suspended.
D. Verify that there is a stable room temperature of at least 65◦F.
E. Verify that there are no foreign materials or objects on the subfloor and that the subfloor is clean and ready for installation.
F. *Direct Full Spread Adhering to Concrete Subfloor Multi-Set : moisture content less than 83% RH when tested per ASTM F2170.*
G. Follow Fieldturf USA, Inc. installation recommendations.
H. Do not average the results of the tests. Report all field test results in writing to the General Contractor, Architect, and End User prior to installation.
I. Verify that the concrete subfloor surface pH level is within the 7 - 11 range.
J. Document the results confirming the slab is within manufacturer's tolerances for slab deviation.

3.2 *PREPARATION OF SURFACES*

A. Sand the entire surface of the concrete slab.
B. Sweep the concrete slab so as to remove all dirt and dust. If a sweeping compound is to be used it must be a sweeping compound that does not contain oil or other items that may inhibit the adhesive bond.
C. Slab must be dust free. In the event that dust impairs adhesive bond, priming the slab prior to application of adhesive may be necessary. Follow installation guidelines.
D. Follow OSHA guidelines.

3.3 *INSTALLATION*

A. The installation area shall be closed to all traffic and activity for a period to be set by the indoor resilient athletic surfacing installer. The indoor resilient athletic surfacing installation shall not begin until the installer is familiar with the existing conditions.
B. All necessary precautions should be taken to minimize noise, smell, dust, the use of hazardous materials and any other items that may inconvenience others.
C. Install the indoor resilient athletic surfacing in strict accordance with the indoor resilient athletic surfacing manufacturer's written instructions.
D. Install the indoor resilient athletic surfacing minimizing cross seams. Provide a seam diagram during the submittal process for approval prior to installation. Vinyl Sheet Flooring Seams: Comply with ASTM F 1516. Rout joints and heat weld to permanently and seamlessly fuse sections together.
E. Paint game lines using approved game line paint primer and game line paint in strict accordance with the game line paint manufacturer's instructions.
F. Install appropriate threshold plates or transition strips where necessary.

3.5 *CLEANING*

A. Remove all unused materials, tools, and equipment and dispose of any debris properly. Clean the indoor resilient athletic surfacing in accordance with the manufacturer's instructions.

3.6 *PROTECTION*

A. If required, protect the indoor resilient athletic surfacing from damage using coverings approved by the manufacturer until acceptance of work by the customer or their authorized representative.

3.7 *RELATED STANDARDS AND GUIDELINES*

A. ASTM F2170 "Standard Test Method for Determining Relative Humidity In Concrete Floor Slabs Using In-Situ Probes"
B. ASTM F710 "Standard Practice for Preparing Concrete Floors to Receive Resilient Flooring"
C. ACI 302.2R-06 "Guideline for Concrete Slabs that Receive Moisture-Sensitive Flooring Materials"
D. ASTM F2772-11 "Standard Specification for Athletic Performance Properties of Indoor Sports Floor Systems"

END OF SECTION

SECTION 09 65 66
ARCHITECTURAL SPECIFICATIONS FOR INDOOR RESILIENT ATHLETIC SURFACING

PART 1 – GENERAL

1.1 *SECTION INCLUDES*

A. Supply and installation of the indoor resilient multipurpose surfacing
B. Application of the game lines
C. References for the correct construction and preparation of concrete slabs to receive resilient flooring.

1.2 *SUBMITTALS*

A. Product Data:
   1. Manufacturer's promotional brochures, specifications and installation instructions
B. Manufacturer Certifications:
   1. Provide certification that accurately identifies the Original Equipment Manufacturer (OEM) of flooring furnished for this project including manufacturer's name, address and factory location.
   2. Suppliers of private label flooring for this project must identify themselves as such and fully disclose the OEM information listed above.
   3. All "manufacturer" requirements in these specifications must be complied with by the OEM, including warranties, certifications, qualifications, product data, test results, environmental requirements, performance data, etc.
C. Samples:
   1. Submit for selection and approval three (3) sets of the indoor resilient multipurpose surfacing, manufacturer's brochures, samples or sample boards of all of the available colors, textures and styles.
   2. Submit color samples of all the available game line paint colors for selection and approval.
D. Closeout Submittals:
   1. Submit three (3) copies of the indoor resilient multipurpose surfacing and manufacturer's maintenance instructions.
   2. Submit three (3) copies of the material and installation warranties as specified.

1.3 *QUALITY ASSURANCE*

A. Qualifications:
   1. The indoor resilient multipurpose surfacing shall have been actively marketed for a minimum of ten (10) years.
   2. The indoor resilient multipurpose surfacing shall be manufactured in an ISO 9001 certified plant.
   3. The indoor resilient multipurpose surfacing shall be manufactured in an ISO 14001 certified plant.
   4. The indoor resilient multipurpose surfacing supplier shall be an established firm, experienced in the field, and competent in the techniques required by the manufacturer.
   5. The installer of the indoor resilient multipurpose surfacing shall have a minimum of five (5) years of experience in the field installing indoor resilient multipurpose surfacing and have worked on at least five (5) projects of similar size, type and complexity.

B. Certifications:
   1. Installer to submit the indoor resilient athletic surfacing manufacturer's or distributor's certification attesting that they are an approved installer of the indoor resilient multipurpose surfacing.
   2. The ind**o**or resilient multipurpose surfacing manufacturer to submit official ISO 9001 certification for the facility in which the indoor resilient multipurpose surfacing is manufactured.

C. Testing:
   Tests shall be relative for multi-purpose use with certificates from independent testing resources to be made available upon request. Test results shall be performed according to ASTM standard testing procedures including ASTM F2772 "Standard Specification for Athletic Performance Properties of Indoor Sports Floor Systems".

1.4 *DELIVERY, STORAGE AND HANDLING*

A. Delivery:
   Material shall not be delivered until all related work is in place and finished and/or proper storage facilities and conditions can be provided and guaranteed stable according to FieldTurf USA, Inc. recommendations.

B. Storage:
   1. Store the material in a secure, clean and dry location.
   2. Maintain temperature between 55° and 85° Fahrenheit.
   3. Store the indoor resilient athletic surfacing rolls in an upright position on a smooth flat surface immediately upon delivery to jobsite.
   4. Rolls shipped in rigid protective cardboard containers can be laid horizontally prior to unpacking and installation.

1.5 *PROJECT/SITE CONDITIONS*

A. It is the responsibility of the general contractor/construction manager to maintain project/site conditions acceptable for the installation of the indoor resilient multipurpose flooring.

B. The area in which the indoor resilient multipurpose surfacing will be installed shall be dry and weather tight. Permanent heat, light and ventilation shall be installed and operable.

C. All other trades shall have completed their work prior to the installation of the resilient athletic flooring. The general contractor or construction manager shall maintain a secure and clean working environment before, during and after the installation.

D. Maintain a stable room temperature of at least 65°F for a minimum of one (1) week prior to, during and thereafter installation.

E. An effective low-permeance vapor barrier is placed directly beneath the concrete subfloor. For "on" or "below grade" installations, it is recommended to provide a permanent vapor barrier resistant to long term hydrostatic pressure/moisture exposure. Protrusions should be sealed to prevent moisture migration into the slab. Moisture should not be allowed to enter the slab after the completed construction.

F. Concrete subfloor surface pH level within the 7 to 11 range dependent upon installation type.

G. Concrete subfloor should be no greater than 1/8" within a 10 ft diameter. This tolerance can be measured in accordance with ASTM E1155. A specified (F_F) of 50 and an (F_L) of 30 should reach this degree of floor flatness and floor level. There is no numerical correlation between F numbers and the deviation from the straight

edge. However, the above specified numbers should achieve a flat floor with minimal deviation in the slab. Reference ACI 117 and ACI 302.1R. The general contractor should provide a certificate of compliance with the above recommendations.

H. Concrete subfloor must be clean and free of all foreign materials or objects including, but not limited to, curing compounds and sealers.

I. Fill cracks, grooves, voids, depressions, and other minor imperfections. Follow the manufacturer's directions. Moveable joints must be treated utilizing specific transitioning joint devices depending upon the architect's recommendations. Follow current ASTM F710 guidelines for the preparation of concrete slabs to receive resilient flooring.

J. Refer to ACI 302.2R "Guidelines for Concrete Slabs that Receive Moisture-Sensitive Flooring Materials" for concrete design and construction.

K. Concrete slab shall be fortified with continual steel reinforcement. Fiber reinforcement alone shall not be considered adequate fortification.

1.6 *WARRANTY*

A. Special Limited Warranty:
   1. Manufacturer's standard form in which manufacturer agrees to repair or replace sports flooring including labor that fails within specified warranty period.

B. Material warranty must be direct from the product manufacturer.
   1. Material warranties must come from original manufacturer or division thereof. Private label warranties from distributors or brokers are not valid. Supply original point of manufacturing upon request.

C. Failures include, but are not limited to, the following:
   1. Material manufacturing defects.
   2. Surface wear and deterioration to the point of wear-through of wear layer per ASTM F410/ASTM F1303.
   3. Failure due to substrate moisture exposure exceeding 98 percent relative humidity when tested according to ASTM F2170.

D. Warranty Period:
   1. <u>For material defects and surface wear-through:</u> **25** years from date of substantial completion.
   2. <u>For moisture vapor tolerance:</u> **25** years from date of substantial completion.

E. Installer's Limited Warranty:
   1. Installer's standard form in which installer agrees to repair or replace sports flooring that fails due to poor workmanship or faulty installation within the specified warranty period.
   2. Warranty Period: 2 years from date of substantial completion.

1.7 *ADDITIONAL MATERIALS*

A. Furnish to the owner additional materials containing a total of at least 1% of each different color or design of the indoor resilient athletic surfacing used on the project.

1.8 *LEED™ CERTIFICATION*

A. The indoor resilient athletic surfacing should be able to help this facility to achieve points towards *LEED™ certification.* Flooring system must be certified by FloorScore.
B. LEED categories positively affected by the indoor resilient athletic surfacing:

LEED™ V4 Credit		Contribution
Materials & Resources: Building Product Disclosure & Optimization (BPDO)		
MRc3: Sourcing of Raw Materials	Options 1 & 2	2 Points
MRc4: Material Ingredients	Option 1	1 Point
MRc5: Construction and Demolition Management	Reclamation and Recycling	ReStart® Program
Indoor Environmental Quality		
EQc2: Low-Emitting Materials	TVOC: 0.5 mg/m3 or less	FloorScore®

PART 2 - PRODUCTS

2.1 *MANUFACTURERS*

A. The basis of the design for the indoor resilient multipurpose surfacing is Omnisports Speed as manufactured by Tarkett.
B. All other installation accessories and related components must be either made or approved by the indoor resilient athletic surfacing manufacturer.
C. Other products may be approved as equal if deemed qualified and submitted in accordance with the General Conditions.
D. Test reports confirming compliance from an independent sports laboratory must be provided along with samples, technical data, installation, maintenance, and warranty prior to acceptance as an alternative product.

2.2 *MATERIALS*

A. Omnisports Speed - Prefabricated sport surface (0.14”) with wood flooring design, single surface embossing and Extreme Three (3) Layers technology (X3LT) as supplied by Tarkett.
   1. Embossing of wood design and solid colors must be the same; varying embossing or surface textures will not be allowed.
   2. Printing of wood design shall closely resemble standard wood strip flooring in size, color, board length, and grain appearance.
   3. Surface embossing combined with TopClean XP must offer proper balance of surface friction per the ASTM F2772.
   4. Surface embossing combined with TopClean XP must provide resistance to stains and scratches. Surface profile must not incorporate linear embossing.
   5. The wood design shall be protected by a clear layer of pure PVC (Polyvinyl Chloride) and TopClean XP, a factory-applied UV cured urethane treatment.
   6. Extreme Three (3) Layers technology (X3LT) includes Omnisports XCS cushion, glass veil and calendared sheet must offer improved shock absorbing comfort while providing better indentation recovery

7. The XCS cushion force reduction layer shall be high-density closed cell PVC foam with honeycomb embossing, and is applied in one continuous manufacturing process.
8. Laminated or adhered foam layers will not be allowed.
9. Field constructed products will not be accepted.

A. Physical properties of the indoor resilient athletic surfacing shall conform to the following minimums:

Width	—	6’ 6” (2 m)
Length	—	75.5’ (23m) approx.
Wear Layer	—	2 mm
Total Thickness	—	3.5 mm
Wear Layer	Type 1– Grade 1	ASTM F1303/F410
Vertical Deformation	PASSED	ASTM F2772
Rolling Load	PASSED	0.30 (EN 1569 {11/1999})
Surface Finish Effect	PASSED	ASTM F2772 (80 – 110)
Chemical Resistance	Excellent	ASTM F925
Impact Resistance	PASSED	EN 1517
Abrasion Resistance	PASSED	0.10 (EN ISO 5470-1 {06/1999})
Static Load Limit	PASSED	ASTM F970- Load 175 Lbs
Sound Insulation	Excellent	+/= 19 dB (ISO 717/2)
In-Room Sound Insulation	Excellent	61dB (NF S31-074)
Ball Rebound	PASSED	ASTM F2772 > 90%
Force Reduction	PASSED	ASTM F2772 Class 1
Fire Rating	PASSED	ASTM E648 Class 1
Microbial Assays Test	No Growth	G21 ASTM - Backing
Phthalate-free technology	—	YES
REACH Compliant	—	YES
Heavy Metals	—	NO
ISO 9001	—	YES
ISO 14001	—	YES

1. Color: As available from the indoor resilient athletic surfacing manufacturer’s standard range.
2. Hardwood Design Series: High definition printing for a realistic wood surface appearance as available from the indoor resilient athletic surfacing manufacturer’s standard range.
3. Texture: Texture to remain consistent between solid colors and wood design when blending colors.

C. Tarkolay – A high quality low permeance slip sheet vapor retarder designed to separate the installed system from the substrate below.
1. Tarkolay as manufactured by Tarkett can be used below, on, or above grade substrates that experience elevated moisture conditions.
2. Moisture tolerances shall have no limitation per ASTM F2170. Physical properties of the indoor resilient athletic surfacing shall conform to the following minimums:

Width	—	6’ 6” (2 m)
Length	—	147’7”’ (45 m) approx.
Total Thickness	—	1.3 mm
Dimensional Stability	PASSED	.01% (EN 1434)
Permeance	Excellent	<0.20 (ASTM E96

D. Welding Rod: As supplied by the indoor resilient athletic surfacing manufacturer or supplier.
   1. Color to blend with the indoor resilient athletic surfacing color or design.
   2. All seams shall be welded to create a monolithic and impermeable surface.
E. Adhesive: As approved by the indoor resilient athletic surfacing manufacturer.
F. Game Line Paint and Primer: As approved by the indoor resilient athletic surfacing manufacturer.

PART 3 - EXECUTION

3.1 *EXAMINATION*

A. It is the responsibility of the general contractor/construction manager to ensure that project/site conditions are acceptable for the installation of the indoor resilient athletic flooring.
B. Verify that the area in which the indoor resilient athletic surfacing will be installed is dry and weather tight. Verify that permanent heat, light and ventilation are installed and operable.
C. Verify that all other work that could cause damage, dirt and dust or interrupt the normal pace of the indoor resilient athletic flooring installation is completed or suspended.
D. Verify that there is a stable room temperature of at least 65°F.
E. Verify that there are no foreign materials or objects on the subfloor and that the subfloor is clean and ready for installation.
F. *Installation with Tarkolay to Concrete Subfloor : moisture content no limitation when tested per ASTM F2170.*
G. Follow Fieldturf USA, Inc. installation recommendations.
H. Do not average the results of the tests. Report all field test results in writing to the General Contractor, Architect, and End User prior to installation.
I. Verify that the concrete subfloor surface pH level is within the 7 - 11 range.
J. Document the results confirming the slab is within manufacturer's tolerances for slab deviation.

3.2 *PREPARATION OF SURFACES*

A. Sand the entire surface of the concrete slab.
B. Sweep the concrete slab so as to remove all dirt and dust. If a sweeping compound is to be used it must be a sweeping compound that does not contain oil or other items that may inhibit the adhesive bond.
C. Slab must be dust free. In the event that dust impairs adhesive bond, priming the slab prior to application of adhesive may be necessary. Follow installation guidelines.
D. Follow OSHA guidelines.

3.3 *INSTALLATION*

A. The installation area shall be closed to all traffic and activity for a period to be set by the indoor resilient athletic surfacing installer. The indoor resilient athletic surfacing installation shall not begin until the installer is familiar with the existing conditions.
B. All necessary precautions should be taken to minimize noise, smell, dust, the use of hazardous materials and any other items that may inconvenience others.
C. Install the indoor resilient athletic surfacing in strict accordance with the indoor resilient athletic surfacing manufacturer's written instructions.
D. Install the indoor resilient athletic surfacing minimizing cross seams. Provide a seam diagram during the submittal process for approval prior to installation. Vinyl Sheet Flooring Seams: Comply with ASTM F 1516. Rout joints and heat weld to permanently and seamlessly fuse sections together.
E. Paint game lines using approved game line paint primer and game line paint in strict accordance with the game line paint manufacturer's instructions.
F. Install appropriate threshold plates or transition strips where necessary.

3.5 *CLEANING*

A. Remove all unused materials, tools, and equipment and dispose of any debris properly. Clean the indoor resilient athletic surfacing in accordance with the manufacturer's instructions.

3.6 *PROTECTION*

A. If required, protect the indoor resilient athletic surfacing from damage using coverings approved by the manufacturer until acceptance of work by the customer or their authorized representative.

3.7 *RELATED STANDARDS AND GUIDELINES*

A. ASTM F2170 "Standard Test Method for Determining Relative Humidity In Concrete Floor Slabs Using In-Situ Probes"
B. ASTM F710 "Standard Practice for Preparing Concrete Floors to Receive Resilient Flooring"
C. ACI 302.2R-06 "Guideline for Concrete Slabs that Receive Moisture-Sensitive Flooring Materials"
D. ASTM F2772-11 "Standard Specification for Athletic Performance Properties of Indoor Sports Floor Systems"

END OF SECTION

SECTION 09 65 66
ARCHITECTURAL SPECIFICATIONS FOR INDOOR RESILIENT ATHLETIC SURFACING

PART 1 – GENERAL

1.1 *SECTION INCLUDES*

A. Supply and installation of the indoor resilient multipurpose surfacing
B. Application of the game lines
C. References for the correct construction and preparation of concrete slabs to receive resilient flooring.

1.2 *SUBMITTALS*

A. Product Data:
   1. Manufacturer's promotional brochures, specifications and installation instructions
B. Manufacturer Certifications:
   1. Provide certification that accurately identifies the Original Equipment Manufacturer (OEM) of flooring furnished for this project including manufacturer's name, address and factory location.
   2. Suppliers of private label flooring for this project must identify themselves as such and fully disclose the OEM information listed above.
   3. All "manufacturer" requirements in these specifications must be complied with by the OEM, including warranties, certifications, qualifications, product data, test results, environmental requirements, performance data, etc.
C. Samples:
   1. Submit for selection and approval three (3) sets of the indoor resilient multipurpose surfacing, manufacturer's brochures, samples or sample boards of all of the available colors, textures and styles.
   2. Submit color samples of all the available game line paint colors for selection and approval.
D. Closeout Submittals:
   1. Submit three (3) copies of the indoor resilient multipurpose surfacing and manufacturer's maintenance instructions.
   2. Submit three (3) copies of the material and installation warranties as specified.

1.3 *QUALITY ASSURANCE*

A. Qualifications:
   1. The indoor resilient multipurpose surfacing shall have been actively marketed for a minimum of ten (10) years.
   2. The indoor resilient multipurpose surfacing shall be manufactured in an ISO 9001 certified plant.
   3. The indoor resilient multipurpose surfacing shall be manufactured in an ISO 14001 certified plant.
   4. The indoor resilient multipurpose surfacing supplier shall be an established firm, experienced in the field, and competent in the techniques required by the manufacturer.
   5. The installer of the indoor resilient multipurpose surfacing shall have a minimum of five (5) years of experience in the field installing indoor resilient multipurpose surfacing and have worked on at least five (5) projects of similar size, type and complexity.

B. Certifications:
   1. Installer to submit the indoor resilient athletic surfacing manufacturer's certification attesting that they are a trained installer of the indoor resilient multipurpose surfacing.
   2. The indoor resilient multipurpose surfacing manufacturer to submit official ISO 9001 certification for the facility in which the indoor resilient multipurpose surfacing is manufactured.

C. Testing:
   1. Tests shall be relative for multi-purpose use with certificates from independent testing resources to be made available upon request.
   2. Test results shall be no more than 5 years old and performed according to ASTM standard testing procedures.

1.4 *DELIVERY, STORAGE AND HANDLING*

A. Delivery:
   Material shall not be delivered until all related work is in place and finished and/or proper storage facilities and conditions can be provided and guaranteed stable according to FieldTurf USA, Inc. recommendations.

B. Storage:
   1. Store the material in a secure, clean and dry location.
   2. Maintain temperature between 55° and 85° Fahrenheit.
   3. Store the indoor resilient athletic surfacing rolls in an upright position on a smooth flat surface immediately upon delivery to jobsite.
   4. Rolls shipped in rigid protective cardboard containers can be laid horizontally prior to unpacking and installation.

1.5 *PROJECT/SITE CONDITIONS*

A. It is the responsibility of the general contractor/construction manager to maintain project/site conditions acceptable for the installation of the indoor resilient multipurpose flooring.

B. The area in which the indoor resilient multipurpose surfacing will be installed shall be dry and weather tight. Permanent heat, light and ventilation shall be installed and operable.

C. All other trades shall have completed their work prior to the installation of the resilient athletic flooring. The general contractor or construction manager shall maintain a secure and clean working environment before, during and after the installation.

D. Maintain a stable room temperature of at least 65°F for a minimum of one (1) week prior to, during and thereafter installation.

E. An effective low-permeance vapor barrier is placed directly beneath the concrete subfloor. For "on" or "below grade" installations, it is recommended to provide a permanent vapor barrier resistant to long term hydrostatic pressure/moisture exposure. Protrusions should be sealed to prevent moisture migration into the slab. Moisture should not be allowed to enter the slab after the completed construction.

F. Concrete subfloor surface pH level within the 7 to 11 range dependent upon installation type.

G. Concrete subfloor should be no greater than 1/8" within a 10 ft diameter. This tolerance can be measured in accordance with ASTM E1155. A specified (F_F) of 50 and an (F_L) of 30 should reach this degree of floor flatness and floor level. There is no numerical correlation between F numbers and the deviation from the straight

edge. However, the above specified numbers should achieve a flat floor with minimal deviation in the slab. Reference ACI 117 and ACI 302.1R. The general contractor should provide a certificate of compliance with the above recommendations.

H. Concrete subfloor must be clean and free of all foreign materials or objects including, but not limited to, curing compounds and sealers.

I. Fill cracks, grooves, voids, depressions, and other minor imperfections. Follow the manufacturer's directions. Moveable joints must be treated utilizing specific transitioning joint devices depending upon the architect's recommendations. Follow current ASTM F710 guidelines for the preparation of concrete slabs to receive resilient flooring.

J. Refer to ACI 302.2R "Guidelines for Concrete Slabs that Receive Moisture-Sensitive Flooring Materials" for concrete design and construction.

K. Concrete slab shall be fortified with continual steel reinforcement. Fiber reinforcement alone shall not be considered adequate fortification.

1.6 *WARRANTY*

A. Materials:
The indoor resilient athletic surfacing shall be covered by the manufacturer against surfacing product defects for 30 years. The manufacturer of the indoor resilient multipurpose surfacing must provide this warranty upon request.

B. Installation:
The installation of the indoor resilient multipurpose surfacing shall be covered against poor workmanship and faulty installation by a two (2) year written, limited warranty provided by the contractor performing/overseeing the installation.

1.7 *ADDITIONAL MATERIALS*

A. Furnish to the owner additional materials containing a total of at least 1% of each different color or design of the indoor resilient athletic surfacing used on the project.

1.8 *LEED™ CERTIFICATION*

A. The indoor resilient athletic surfacing should be able to help this facility to achieve points towards *LEED™ certification.* Flooring system must be certified by FloorScore.

B. LEED categories positively affected by the indoor resilient athletic surfacing:

Product Type			PU with Recycled Base Layer
Building Reuse Maintain Interior Nonstructural Elements	**MR 1.2**	Renovation	1
Construction Waste Management	**MR 2**	Renovation	2
Recycled Content	**MR 4** **20% - 2 points**	New/Renovation	2
Regional Materials	**MR 5** **20% - 2 points**	New/Renovation	2
Materials and Resources Rapidly Renewable Materials	**MR 6**	New/Renovation	1
Indoor Environmental Air Quality Low VOC Adhesives/Sealants	**IEQ 4.1**	New/Renovation	1
Low-emitting Materials Paints and Coatings	**IEQ 4.2**	New/Renovation	1

PART 2 - PRODUCTS

2.1 *MANUFACTURERS*

A. The basis of the design for the indoor resilient multipurpose surfacing is Polyturf Plus Elite Pad and Pour 4+ 2 and Lumaflex system as manufactured by Tarkett.
B. All other installation accessories and related components must be either made or approved by the indoor resilient athletic surfacing manufacturer.
C. Other products may be approved as equal if deemed qualified and submitted in accordance with the General Conditions.
D. Test reports confirming compliance from an independent sports laboratory must be provided along with samples, technical data, installation, maintenance, and warranty prior to acceptance as an alternative product.

2.2 *MATERIALS*

Flooring System:
Polyturf Plus Elite 4+2 (6mm total thickness) consists of a recycled resilient sheet force reduction layer integrated with seamless, liquid applied, and self-leveling 2 mm polyurethane topcoat.

A durable protective color coat shall be applied to a thickness of approximately 7 mils. The finished product shall be a seamless surface heterogeneous resilient multipurpose synthetic flooring system. System shall comply with the following criteria. Colors to be selected from manufacturer's standard range.

The Lumaflex System shall incorporate Lumaflex double tongue and grooved multi-ply engineered panels, force reduction cushion, and appropriate vapor retarder.

A. Physical properties of the indoor resilient athletic surfacing shall conform to the following minimums:

Properties	Standards	PolyTurf Plus Pad & Pour Base Mat + Wear Coat +Top Coat		
Base Mat Properties				
Width		59″		
Length		82 lin. ft		
Weight		1.2 lb/sq ft		
Density	ASTM D297	.67 min (g/cm□)		
Tensile Strength	ASTM D412	88 psi (Die Cast C)		
Elongation	ASTM D412	48.5% (Die Cast C)		
Compression	ASTM F36	@50 psi	@100 psi	@200 psi
		87%	91%	91%
Tear Strength	ASTM D624	30 PPI Die C		
Flexibility	ASTM F147	0-1		
Compression Set B	ASTM D395	37% (25% deflection 158°F/22hrs)		
Compression Set B	ASTM D395	26% (50% deflection 158°F/22hrs)		
2mm Wear Coat Properties				
Shore Hardness	Shore A	80		
Tensile Strength	ASTM D412	1600psi		
Elongation	ASTM D412	150%		
Tear Strength	ASTM D624	122PLI		
Misc Techical				
Environmental Certification	GreenGuard	GreenGuard Plus Certified		
Sports Characteristics				
Overall Thickness			37 mm	
Shock Absorption	ASTM F2772		Class 5	
Ball Bounce	ASTM F2772	>90%		
Vertical Deformation	ASTM F2772	Passed		
Surface Finish Effect	ASTM F2772	Passed		

B. Adhesive: As approved by the indoor resilient athletic surfacing manufacturer.
C. Game Line Paint and Primer: As approved by the indoor resilient athletic surfacing manufacturer.
D. Colors selected from standard color range.

PART 3 - EXECUTION

3.1 *EXAMINATION*

A. It is the responsibility of the general contractor/construction manager to ensure that project/site conditions are acceptable for the installation of the indoor resilient athletic flooring.
B. Verify that the area in which the indoor resilient athletic surfacing will be installed is dry and weather tight. Verify that permanent heat, light and ventilation are installed and operable.
C. Verify that all other work that could cause damage, dirt and dust or interrupt the normal pace of the indoor resilient athletic flooring installation is completed or suspended.
D. Verify that there is a stable room temperature of at least 65°F.
E. Verify that there are no foreign materials or objects on the subfloor and that the subfloor is clean and ready for installation.
F. *Concrete Subfloor: moisture content less than 85% RH when tested per ASTM F2170.*
G. Follow Fieldturf USA, Inc. installation recommendations.
H. Do not average the results of the tests. Report all field test results in writing to the General Contractor, Architect, and End User prior to installation.
I. Verify that the concrete subfloor surface pH level is within the 7 - 11 range.
J. Document the results confirming the slab is within manufacturer's tolerances for slab deviation.

3.2 *PREPARATION OF SURFACES*

A. Sand the entire surface of the concrete slab.
B. Sweep the concrete slab so as to remove all dirt and dust. If a sweeping compound is to be used it must be a sweeping compound that does not contain oil or other items that may inhibit the adhesive bond.
C. Slab must be dust free. In the event that dust impairs adhesive bond, priming the slab prior to application of adhesive may be necessary. Follow installation guidelines.
D. Follow OSHA guidelines.

3.3 *INSTALLATION*

A. The installation area shall be closed to all traffic and activity for a period to be set by the indoor resilient athletic surfacing installer. The indoor resilient athletic surfacing installation shall not begin until the installer is familiar with the existing conditions.
B. All necessary precautions should be taken to minimize noise, smell, dust, the use of hazardous materials and any other items that may inconvenience others.
C. Install the indoor resilient athletic surfacing in strict accordance with the indoor resilient athletic surfacing manufacturer's written instructions.
D. Paint game lines using approved game line paint primer and game line paint in strict accordance with the game line paint manufacturer's instructions.
E. Install appropriate threshold plates or transition strips where necessary.

2.0 *CLEANING*

A. Remove all unused materials, tools, and equipment and dispose of any debris properly. Clean the indoor resilient athletic surfacing in accordance with the manufacturer's instructions.

3.6 *PROTECTION*

A. If required, protect the indoor resilient athletic surfacing from damage using coverings approved by the manufacturer until acceptance of work by the customer or their authorized representative.

3.7 *RELATED STANDARDS AND GUIDELINES*

A. ASTM F2170 "Standard Test Method for Determining Relative Humidity In Concrete Floor Slabs Using In-Situ Probes"
B. ASTM F710 "Standard Practice for Preparing Concrete Floors to Receive Resilient Flooring"
C. ACI 302.2R-06 "Guideline for Concrete Slabs that Receive Moisture-Sensitive Flooring Materials"
D. ASTM F2772-11 "Standard Specification for Athletic Performance Properties of Indoor Sports Floor Systems"

END OF SECTION

SECTION 09 65 66
ARCHITECTURAL SPECIFICATIONS FOR INDOOR RESILIENT ATHLETIC SURFACING

PART 1 – GENERAL

1.1 *SECTION INCLUDES*

A. Supply and installation of the indoor resilient multipurpose surfacing
B. Application of the game lines
C. References for the correct construction and preparation of concrete slabs to receive resilient flooring.

1.2 *SUBMITTALS*

A. Product Data:
   1. Manufacturer's promotional brochures, specifications and installation instructions
B. Manufacturer Certifications:
   1. Provide certification that accurately identifies the Original Equipment Manufacturer (OEM) of flooring furnished for this project including manufacturer's name, address and factory location.
   2. Suppliers of private label flooring for this project must identify themselves as such and fully disclose the OEM information listed above.
   3. All "manufacturer" requirements in these specifications must be complied with by the OEM, including warranties, certifications, qualifications, product data, test results, environmental requirements, performance data, etc.
C. Samples:
   1. Submit for selection and approval three (3) sets of the indoor resilient multipurpose surfacing, manufacturer's brochures, samples or sample boards of all of the available colors, textures and styles.
   2. Submit color samples of all the available game line paint colors for selection and approval.
D. Closeout Submittals:
   1. Submit three (3) copies of the indoor resilient multipurpose surfacing and manufacturer's maintenance instructions.
   2. Submit three (3) copies of the material and installation warranties as specified.

1.3 *QUALITY ASSURANCE*

A. Qualifications:
   1. The indoor resilient multipurpose surfacing shall have been actively marketed for a minimum of ten (10) years.
   2. The indoor resilient multipurpose surfacing shall be manufactured in an ISO 9001 certified plant.
   3. The indoor resilient multipurpose surfacing shall be manufactured in an ISO 14001 certified plant.
   4. The indoor resilient multipurpose surfacing supplier shall be an established firm, experienced in the field, and competent in the techniques required by the manufacturer.
   5. The installer of the indoor resilient multipurpose surfacing shall have a minimum of five (5) years of experience in the field installing indoor resilient multipurpose surfacing and have worked on at least five (5) projects of similar size, type and complexity.

B. Certifications:
   1. Installer to submit the indoor resilient athletic surfacing manufacturer's certification attesting that they are a trained installer of the indoor resilient multipurpose surfacing.
   2. The indoor resilient multipurpose surfacing manufacturer to submit official ISO 9001 certification for the facility in which the indoor resilient multipurpose surfacing is manufactured.

C. Testing:
   1. Tests shall be relative for multi-purpose use with certificates from independent testing resources to be made available upon request.
   2. Test results shall be no more than 5 years old and performed according to ASTM standard testing procedures.

1.4 *DELIVERY, STORAGE AND HANDLING*

A. Delivery:
   Material shall not be delivered until all related work is in place and finished and/or proper storage facilities and conditions can be provided and guaranteed stable according to FieldTurf USA, Inc. recommendations.

B. Storage:
   1. Store the material in a secure, clean and dry location.
   2. Maintain temperature between 55° and 85° Fahrenheit.
   3. Store the indoor resilient athletic surfacing rolls in an upright position on a smooth flat surface immediately upon delivery to jobsite.
   4. Rolls shipped in rigid protective cardboard containers can be laid horizontally prior to unpacking and installation.

1.5 *PROJECT/SITE CONDITIONS*

A. It is the responsibility of the general contractor/construction manager to maintain project/site conditions acceptable for the installation of the indoor resilient multipurpose flooring.

B. The area in which the indoor resilient multipurpose surfacing will be installed shall be dry and weather tight. Permanent heat, light and ventilation shall be installed and operable.

C. All other trades shall have completed their work prior to the installation of the resilient athletic flooring. The general contractor or construction manager shall maintain a secure and clean working environment before, during and after the installation.

D. Maintain a stable room temperature of at least 65°F for a minimum of one (1) week prior to, during and thereafter installation.

E. An effective low-permeance vapor barrier is placed directly beneath the concrete subfloor. For "on" or "below grade" installations, it is recommended to provide a permanent vapor barrier resistant to long term hydrostatic pressure/moisture exposure. Protrusions should be sealed to prevent moisture migration into the slab. Moisture should not be allowed to enter the slab after the completed construction.

F. Concrete subfloor surface pH level within the 7 to 11 range dependent upon installation type.

G. Concrete subfloor should be no greater than 1/8" within a 10 ft diameter. This tolerance can be measured in accordance with ASTM E1155. A specified (F_F) of 50 and an (F_L) of 30 should reach this degree of floor flatness and floor level. There is no numerical correlation between F numbers and the deviation from the straight

edge. However, the above specified numbers should achieve a flat floor with minimal deviation in the slab. Reference ACI 117 and ACI 302.1R. The general contractor should provide a certificate of compliance with the above recommendations.

H. Concrete subfloor must be clean and free of all foreign materials or objects including, but not limited to, curing compounds and sealers.

I. Fill cracks, grooves, voids, depressions, and other minor imperfections. Follow the manufacturer's directions. Moveable joints must be treated utilizing specific transitioning joint devices depending upon the architect's recommendations. Follow current ASTM F710 guidelines for the preparation of concrete slabs to receive resilient flooring.

J. Refer to ACI 302.2R "Guidelines for Concrete Slabs that Receive Moisture-Sensitive Flooring Materials" for concrete design and construction.

K. Concrete slab shall be fortified with continual steel reinforcement. Fiber reinforcement alone shall not be considered adequate fortification.

1.6 *WARRANTY*

A. Materials:
The indoor resilient athletic surfacing shall be covered by the manufacturer against surfacing product defects for 30 years. The manufacturer of the indoor resilient multipurpose surfacing must provide this warranty upon request.

B. Installation:
The installation of the indoor resilient multipurpose surfacing shall be covered against poor workmanship and faulty installation by a two (2) year written, limited warranty provided by the contractor performing/overseeing the installation.

1.7 *ADDITIONAL MATERIALS*

A. Furnish to the owner additional materials containing a total of at least 1% of each different color or design of the indoor resilient athletic surfacing used on the project.

1.8 *LEED™ CERTIFICATION*

A. The indoor resilient athletic surfacing should be able to help this facility to achieve points towards *LEED™ certification.* Flooring system must be certified by FloorScore.

B. LEED categories positively affected by the indoor resilient athletic surfacing:

Product Type			PU with Recycled Base Layer
Building Reuse Maintain Interior Nonstructural Elements	**MR 1.2**	Renovation	1
Construction Waste Management	**MR 2**	Renovation	2
Recycled Content	**MR 4** **20% - 2 points**	New/Renovation	2
Regional Materials	**MR 5** **20% - 2 points**	New/Renovation	2
Materials and Resources Rapidly Renewable Materials	**MR 6**	New/Renovation	1
Indoor Environmental Air Quality Low VOC Adhesives/Sealants	**IEQ 4.1**	New/Renovation	1
Low-emitting Materials Paints and Coatings	**IEQ 4.2**	New/Renovation	1

PART 2 - PRODUCTS

2.1 *MANUFACTURERS*

A. The basis of the design for the indoor resilient multipurpose surfacing is Polyturf Plus Pad and Pour 4+ 2 and Lumaflex system as manufactured by Tarkett.
B. All other installation accessories and related components must be either made or approved by the indoor resilient athletic surfacing manufacturer.
C. Other products may be approved as equal if deemed qualified and submitted in accordance with the General Conditions.
D. Test reports confirming compliance from an independent sports laboratory must be provided along with samples, technical data, installation, maintenance, and warranty prior to acceptance as an alternative product.

2.2 *MATERIALS*

Flooring System:
Polyturf Plus 4+2 (6mm total thickness) consists of a recycled resilient sheet force reduction layer integrated with seamless, liquid applied, and self-leveling 2 mm polyurethane topcoat.

A durable protective color coat shall be applied to a thickness of approximately 7 mils. The finished product shall be a seamless surface heterogeneous resilient multipurpose synthetic flooring system. System shall comply with the following criteria. Colors to be selected from manufacturer's standard range.

The Lumaflex System shall incorporate Lumaflex double tongue and grooved multi-ply engineered panels, force reduction cushion, and appropriate vapor retarder.

A. Physical properties of the indoor resilient athletic surfacing shall conform to the following minimums:

Properties	Standards	PolyTurf Plus Pad & Pour Base Mat + Wear Coat +Top Coat		
Base Mat Properties				
Width		59″		
Length		82 lin. ft		
Weight		1.2 lb/sq ft		
Density	ASTM D297	.67 min (g/cm□)		
Tensile Strength	ASTM D412	88 psi (Die Cast C)		
Elongation	ASTM D412	48.5% (Die Cast C)		
Compression	ASTM F36	@50 psi	@100 psi	@200 psi
		87%	91%	91%
Tear Strength	ASTM D624	30 PPI Die C		
Flexibility	ASTM F147	0-1		
Compression Set B	ASTM D395	37% (25% deflection 158°F/22hrs)		
Compression Set B	ASTM D395	26% (50% deflection 158°F/22hrs)		
2mm Wear Coat Properties				
Shore Hardness	Shore A	80		
Tensile Strength	ASTM D412	1600psi		
Elongation	ASTM D412	150%		
Tear Strength	ASTM D624	122PLI		
Misc Techical				
Environmental Certification	GreenGuard	GreenGuard Plus Certified		
Sports Characteristics				
Overall Thickness			37 mm	
Shock Absorption	ASTM F2772		Class 4	
Ball Bounce	ASTM F2772	>90%		
Vertical Deformation	ASTM F2772	Passed		
Surface Finish Effect	ASTM F2772	Passed		

B. Adhesive: As approved by the indoor resilient athletic surfacing manufacturer.

C. Game Line Paint and Primer: As approved by the indoor resilient athletic surfacing manufacturer.

D. Colors selected from standard color range.

PART 3 - EXECUTION

3.1 *EXAMINATION*

A. It is the responsibility of the general contractor/construction manager to ensure that project/site conditions are acceptable for the installation of the indoor resilient athletic flooring.
B. Verify that the area in which the indoor resilient athletic surfacing will be installed is dry and weather tight. Verify that permanent heat, light and ventilation are installed and operable.
C. Verify that all other work that could cause damage, dirt and dust or interrupt the normal pace of the indoor resilient athletic flooring installation is completed or suspended.
D. Verify that there is a stable room temperature of at least 65°F.
E. Verify that there are no foreign materials or objects on the subfloor and that the subfloor is clean and ready for installation.
F. *Concrete Subfloor: moisture content less than 85% RH when tested per ASTM F2170.*
G. Follow Fieldturf USA, Inc. installation recommendations.
H. Do not average the results of the tests. Report all field test results in writing to the General Contractor, Architect, and End User prior to installation.
I. Verify that the concrete subfloor surface pH level is within the 7 - 11 range.
J. Document the results confirming the slab is within manufacturer's tolerances for slab deviation.

3.2 *PREPARATION OF SURFACES*

A. Sand the entire surface of the concrete slab.
B. Sweep the concrete slab so as to remove all dirt and dust. If a sweeping compound is to be used it must be a sweeping compound that does not contain oil or other items that may inhibit the adhesive bond.
C. Slab must be dust free. In the event that dust impairs adhesive bond, priming the slab prior to application of adhesive may be necessary. Follow installation guidelines.
D. Follow OSHA guidelines.

3.3 *INSTALLATION*

A. The installation area shall be closed to all traffic and activity for a period to be set by the indoor resilient athletic surfacing installer. The indoor resilient athletic surfacing installation shall not begin until the installer is familiar with the existing conditions.
B. All necessary precautions should be taken to minimize noise, smell, dust, the use of hazardous materials and any other items that may inconvenience others.
C. Install the indoor resilient athletic surfacing in strict accordance with the indoor resilient athletic surfacing manufacturer's written instructions.
D. Paint game lines using approved game line paint primer and game line paint in strict accordance with the game line paint manufacturer's instructions.
E. Install appropriate threshold plates or transition strips where necessary.

2.0 *CLEANING*

A. Remove all unused materials, tools, and equipment and dispose of any debris properly. Clean the indoor resilient athletic surfacing in accordance with the manufacturer's instructions.

3.6 *PROTECTION*

A. If required, protect the indoor resilient athletic surfacing from damage using coverings approved by the manufacturer until acceptance of work by the customer or their authorized representative.

3.7 *RELATED STANDARDS AND GUIDELINES*

A. ASTM F2170 "Standard Test Method for Determining Relative Humidity In Concrete Floor Slabs Using In-Situ Probes"
B. ASTM F710 "Standard Practice for Preparing Concrete Floors to Receive Resilient Flooring"
C. ACI 302.2R-06 "Guideline for Concrete Slabs that Receive Moisture-Sensitive Flooring Materials"
D. ASTM F2772-11 "Standard Specification for Athletic Performance Properties of Indoor Sports Floor Systems"

END OF SECTION

SECTION 09 65 66
ARCHITECTURAL SPECIFICATIONS FOR INDOOR RESILIENT ATHLETIC SURFACING

PART 1 – GENERAL

1.1 *SECTION INCLUDES*

A. Supply and installation of the indoor resilient multipurpose surfacing
B. Application of the game lines
C. References for the correct construction and preparation of concrete slabs to receive resilient flooring.

1.2 *SUBMITTALS*

A. Product Data:
   1. Manufacturer's promotional brochures, specifications and installation instructions
B. Manufacturer Certifications:
   1. Provide certification that accurately identifies the Original Equipment Manufacturer (OEM) of flooring furnished for this project including manufacturer's name, address and factory location.
   2. Suppliers of private label flooring for this project must identify themselves as such and fully disclose the OEM information listed above.
   3. All "manufacturer" requirements in these specifications must be complied with by the OEM, including warranties, certifications, qualifications, product data, test results, environmental requirements, performance data, etc.
C. Samples:
   1. Submit for selection and approval three (3) sets of the indoor resilient multipurpose surfacing, manufacturer's brochures, samples or sample boards of all of the available colors, textures and styles.
   2. Submit color samples of all the available game line paint colors for selection and approval.
D. Closeout Submittals:
   1. Submit three (3) copies of the indoor resilient multipurpose surfacing and manufacturer's maintenance instructions.
   2. Submit three (3) copies of the material and installation warranties as specified.

1.3 *QUALITY ASSURANCE*

A. Qualifications:
   1. The indoor resilient multipurpose surfacing shall have been actively marketed for a minimum of ten (10) years.
   2. The indoor resilient multipurpose surfacing shall be manufactured in an ISO 9001 certified plant.
   3. The indoor resilient multipurpose surfacing shall be manufactured in an ISO 14001 certified plant.
   4. The indoor resilient multipurpose surfacing supplier shall be an established firm, experienced in the field, and competent in the techniques required by the manufacturer.
   5. The installer of the indoor resilient multipurpose surfacing shall have a minimum of five (5) years of experience in the field installing indoor resilient multipurpose surfacing and have worked on at least five (5) projects of similar size, type and complexity.

B. Certifications:
   1. Installer to submit the indoor resilient athletic surfacing manufacturer's certification attesting that they are a trained installer of the indoor resilient multipurpose surfacing.
   2. The indoor resilient multipurpose surfacing manufacturer to submit official ISO 9001 certification for the facility in which the indoor resilient multipurpose surfacing is manufactured.

C. Testing:
   1. Tests shall be relative for multi-purpose use with certificates from independent testing resources to be made available upon request.
   2. Test results shall be no more than 5 years old and performed according to ASTM standard testing procedures.

1.4 *DELIVERY, STORAGE AND HANDLING*

A. Delivery:
   Material shall not be delivered until all related work is in place and finished and/or proper storage facilities and conditions can be provided and guaranteed stable according to FieldTurf USA, Inc. recommendations.

B. Storage:
   1. Store the material in a secure, clean and dry location.
   2. Maintain temperature between 55° and 85° Fahrenheit.
   3. Store the indoor resilient athletic surfacing rolls in an upright position on a smooth flat surface immediately upon delivery to jobsite.
   4. Rolls shipped in rigid protective cardboard containers can be laid horizontally prior to unpacking and installation.

1.5 *PROJECT/SITE CONDITIONS*

A. It is the responsibility of the general contractor/construction manager to maintain project/site conditions acceptable for the installation of the indoor resilient multipurpose flooring.

B. The area in which the indoor resilient multipurpose surfacing will be installed shall be dry and weather tight. Permanent heat, light and ventilation shall be installed and operable.

C. All other trades shall have completed their work prior to the installation of the resilient athletic flooring. The general contractor or construction manager shall maintain a secure and clean working environment before, during and after the installation.

D. Maintain a stable room temperature of at least 65°F for a minimum of one (1) week prior to, during and thereafter installation.

E. An effective low-permeance vapor barrier is placed directly beneath the concrete subfloor. For "on" or "below grade" installations, it is recommended to provide a permanent vapor barrier resistant to long term hydrostatic pressure/moisture exposure. Protrusions should be sealed to prevent moisture migration into the slab. Moisture should not be allowed to enter the slab after the completed construction.

F. Concrete subfloor surface pH level within the 7 to 11 range dependent upon installation type.

G. Concrete subfloor should be no greater than 1/8" within a 10 ft diameter. This tolerance can be measured in accordance with ASTM E1155. A specified (F_F) of 50 and an (F_L) of 30 should reach this degree of floor flatness and floor level. There is no numerical correlation between F numbers and the deviation from the straight

edge. However, the above specified numbers should achieve a flat floor with minimal deviation in the slab. Reference ACI 117 and ACI 302.1R. The general contractor should provide a certificate of compliance with the above recommendations.

H. Concrete subfloor must be clean and free of all foreign materials or objects including, but not limited to, curing compounds and sealers.

I. Fill cracks, grooves, voids, depressions, and other minor imperfections. Follow the manufacturer's directions. Moveable joints must be treated utilizing specific transitioning joint devices depending upon the architect's recommendations. Follow current ASTM F710 guidelines for the preparation of concrete slabs to receive resilient flooring.

J. Refer to ACI 302.2R "Guidelines for Concrete Slabs that Receive Moisture-Sensitive Flooring Materials" for concrete design and construction.

K. Concrete slab shall be fortified with continual steel reinforcement. Fiber reinforcement alone shall not be considered adequate fortification.

1.6 *WARRANTY*

A. Materials:
The indoor resilient athletic surfacing shall be covered by the manufacturer against surfacing product defects for 30 years. The manufacturer of the indoor resilient multipurpose surfacing must provide this warranty upon request.

B. Installation:
The installation of the indoor resilient multipurpose surfacing shall be covered against poor workmanship and faulty installation by a two (2) year written, limited warranty provided by the contractor performing/overseeing the installation.

1.7 *ADDITIONAL MATERIALS*

A. Furnish to the owner additional materials containing a total of at least 1% of each different color or design of the indoor resilient athletic surfacing used on the project.

1.8 *LEED™ CERTIFICATION*

A. The indoor resilient athletic surfacing should be able to help this facility to achieve points towards *LEED™ certification.* Flooring system must be certified by FloorScore.

B. LEED categories positively affected by the indoor resilient athletic surfacing:

Product Type			PU with Recycled Base Layer
Building Reuse Maintain Interior Nonstructural Elements	**MR 1.2**	Renovation	1
Construction Waste Management	**MR 2**	Renovation	2
Recycled Content	**MR 4** **20% - 2 points**	New/Renovation	2
Regional Materials	**MR 5** **20% - 2 points**	New/Renovation	2
Materials and Resources Rapidly Renewable Materials	**MR 6**	New/Renovation	1
Indoor Environmental Air Quality Low VOC Adhesives/Sealants	**IEQ 4.1**	New/Renovation	1
Low-emitting Materials Paints and Coatings	**IEQ 4.2**	New/Renovation	1

PART 2 - PRODUCTS

2.1 *MANUFACTURERS*

A. The basis of the design for the indoor resilient multipurpose surfacing is Polyturf Plus Elite Pad and Pour 7+2 and Lumaflex system as manufactured by Tarkett.
B. All other installation accessories and related components must be either made or approved by the indoor resilient athletic surfacing manufacturer.
C. Other products may be approved as equal if deemed qualified and submitted in accordance with the General Conditions.
D. Test reports confirming compliance from an independent sports laboratory must be provided along with samples, technical data, installation, maintenance, and warranty prior to acceptance as an alternative product.

2.2 *MATERIALS*

Flooring System:
Polyturf Plus Elite 7+2 (9mm total thickness) consists of a recycled resilient sheet force reduction layer integrated with seamless, liquid applied, and self-leveling 2 mm polyurethane topcoat.

A durable protective color coat shall be applied to a thickness of approximately 7 mils. The finished product shall be a seamless surface heterogeneous resilient multipurpose synthetic flooring system. System shall comply with the following criteria. Colors to be selected from manufacturer's standard range.

The Lumaflex System shall incorporate Lumaflex double tongue and grooved multi-ply engineered panels, force reduction cushion, and appropriate vapor retarder.

A. Physical properties of the indoor resilient athletic surfacing shall conform to the following minimums:

Properties	Standards	PolyTurf Plus Pad & Pour Base Mat + Wear Coat +Top Coat		
Base Mat Properties				
Width		59″		
Length		82 lin. ft		
Weight		1.2 lb/sq ft		
Density	ASTM D297	.67 min (g/cm□)		
Tensile Strength	ASTM D412	88 psi (Die Cast C)		
Elongation	ASTM D412	48.5% (Die Cast C)		
Compression	ASTM F36	@50 psi	@100 psi	@200 psi
		87%	91%	91%
Tear Strength	ASTM D624	30 PPI Die C		
Flexibility	ASTM F147	0-1		
Compression Set B	ASTM D395	37% (25% deflection 158°F/22hrs)		
Compression Set B	ASTM D395	26% (50% deflection 158°F/22hrs)		
2mm Wear Coat Properties				
Shore Hardness	Shore A	80		
Tensile Strength	ASTM D412	1600psi		
Elongation	ASTM D412	150%		
Tear Strength	ASTM D624	122PLI		
Misc Techical				
Environmental Certification	GreenGuard	GreenGuard Plus Certified		
Sports Characteristics				
Overall Thickness			40 mm	
Shock Absorption	ASTM F2772		Class 5	
Ball Bounce	ASTM F2772	>90%		
Vertical Deformation	ASTM F2772	Passed		
Surface Finish Effect	ASTM F2772	Passed		

B. Adhesive: As approved by the indoor resilient athletic surfacing manufacturer.
C. Game Line Paint and Primer: As approved by the indoor resilient athletic surfacing manufacturer.
D. Colors selected from standard color range.

PART 3 - EXECUTION

3.1 *EXAMINATION*

A. It is the responsibility of the general contractor/construction manager to ensure that project/site conditions are acceptable for the installation of the indoor resilient athletic flooring.
B. Verify that the area in which the indoor resilient athletic surfacing will be installed is dry and weather tight. Verify that permanent heat, light and ventilation are installed and operable.
C. Verify that all other work that could cause damage, dirt and dust or interrupt the normal pace of the indoor resilient athletic flooring installation is completed or suspended.
D. Verify that there is a stable room temperature of at least 65°F.
E. Verify that there are no foreign materials or objects on the subfloor and that the subfloor is clean and ready for installation.
F. *Concrete Subfloor: moisture content less than 85% RH when tested per ASTM F2170.*
G. Follow Fieldturf USA, Inc. installation recommendations.
H. Do not average the results of the tests. Report all field test results in writing to the General Contractor, Architect, and End User prior to installation.
I. Verify that the concrete subfloor surface pH level is within the 7 - 11 range.
J. Document the results confirming the slab is within manufacturer's tolerances for slab deviation.

3.2 *PREPARATION OF SURFACES*

A. Sand the entire surface of the concrete slab.
B. Sweep the concrete slab so as to remove all dirt and dust. If a sweeping compound is to be used it must be a sweeping compound that does not contain oil or other items that may inhibit the adhesive bond.
C. Slab must be dust free. In the event that dust impairs adhesive bond, priming the slab prior to application of adhesive may be necessary. Follow installation guidelines.
D. Follow OSHA guidelines.

3.3 *INSTALLATION*

A. The installation area shall be closed to all traffic and activity for a period to be set by the indoor resilient athletic surfacing installer. The indoor resilient athletic surfacing installation shall not begin until the installer is familiar with the existing conditions.
B. All necessary precautions should be taken to minimize noise, smell, dust, the use of hazardous materials and any other items that may inconvenience others.
C. Install the indoor resilient athletic surfacing in strict accordance with the indoor resilient athletic surfacing manufacturer's written instructions.
D. Paint game lines using approved game line paint primer and game line paint in strict accordance with the game line paint manufacturer's instructions.
E. Install appropriate threshold plates or transition strips where necessary.

2.0 *CLEANING*

A. Remove all unused materials, tools, and equipment and dispose of any debris properly. Clean the indoor resilient athletic surfacing in accordance with the manufacturer's instructions.

3.6 *PROTECTION*

A. If required, protect the indoor resilient athletic surfacing from damage using coverings approved by the manufacturer until acceptance of work by the customer or their authorized representative.

3.7 *RELATED STANDARDS AND GUIDELINES*

A. ASTM F2170 "Standard Test Method for Determining Relative Humidity In Concrete Floor Slabs Using In-Situ Probes"
B. ASTM F710 "Standard Practice for Preparing Concrete Floors to Receive Resilient Flooring"
C. ACI 302.2R-06 "Guideline for Concrete Slabs that Receive Moisture-Sensitive Flooring Materials"
D. ASTM F2772-11 "Standard Specification for Athletic Performance Properties of Indoor Sports Floor Systems"

END OF SECTION

SECTION 09 65 66
ARCHITECTURAL SPECIFICATIONS FOR INDOOR RESILIENT ATHLETIC SURFACING

PART 1 – GENERAL

1.1 *SECTION INCLUDES*

A. Supply and installation of the indoor resilient multipurpose surfacing
B. Application of the game lines
C. References for the correct construction and preparation of concrete slabs to receive resilient flooring.

1.2 *SUBMITTALS*

A. Product Data:
   1. Manufacturer's promotional brochures, specifications and installation instructions
B. Manufacturer Certifications:
   1. Provide certification that accurately identifies the Original Equipment Manufacturer (OEM) of flooring furnished for this project including manufacturer's name, address and factory location.
   2. Suppliers of private label flooring for this project must identify themselves as such and fully disclose the OEM information listed above.
   3. All "manufacturer" requirements in these specifications must be complied with by the OEM, including warranties, certifications, qualifications, product data, test results, environmental requirements, performance data, etc.
C. Samples:
   1. Submit for selection and approval three (3) sets of the indoor resilient multipurpose surfacing, manufacturer's brochures, samples or sample boards of all of the available colors, textures and styles.
   2. Submit color samples of all the available game line paint colors for selection and approval.
D. Closeout Submittals:
   1. Submit three (3) copies of the indoor resilient multipurpose surfacing and manufacturer's maintenance instructions.
   2. Submit three (3) copies of the material and installation warranties as specified.

1.3 *QUALITY ASSURANCE*

A. Qualifications:
   1. The indoor resilient multipurpose surfacing shall have been actively marketed for a minimum of ten (10) years.
   2. The indoor resilient multipurpose surfacing shall be manufactured in an ISO 9001 certified plant.
   3. The indoor resilient multipurpose surfacing shall be manufactured in an ISO 14001 certified plant.
   4. The indoor resilient multipurpose surfacing supplier shall be an established firm, experienced in the field, and competent in the techniques required by the manufacturer.
   5. The installer of the indoor resilient multipurpose surfacing shall have a minimum of five (5) years of experience in the field installing indoor resilient multipurpose surfacing and have worked on at least five (5) projects of similar size, type and complexity.

B. Certifications:
   1. Installer to submit the indoor resilient athletic surfacing manufacturer's certification attesting that they are a trained installer of the indoor resilient multipurpose surfacing.
   2. The indoor resilient multipurpose surfacing manufacturer to submit official ISO 9001 certification for the facility in which the indoor resilient multipurpose surfacing is manufactured.

C. Testing:
   1. Tests shall be relative for multi-purpose use with certificates from independent testing resources to be made available upon request.
   2. Test results shall be no more than 5 years old and performed according to ASTM standard testing procedures.

1.4 *DELIVERY, STORAGE AND HANDLING*

A. Delivery:
   Material shall not be delivered until all related work is in place and finished and/or proper storage facilities and conditions can be provided and guaranteed stable according to FieldTurf USA, Inc. recommendations.

B. Storage:
   1. Store the material in a secure, clean and dry location.
   2. Maintain temperature between 55° and 85° Fahrenheit.
   3. Store the indoor resilient athletic surfacing rolls in an upright position on a smooth flat surface immediately upon delivery to jobsite.
   4. Rolls shipped in rigid protective cardboard containers can be laid horizontally prior to unpacking and installation.

1.5 *PROJECT/SITE CONDITIONS*

A. It is the responsibility of the general contractor/construction manager to maintain project/site conditions acceptable for the installation of the indoor resilient multipurpose flooring.

B. The area in which the indoor resilient multipurpose surfacing will be installed shall be dry and weather tight. Permanent heat, light and ventilation shall be installed and operable.

C. All other trades shall have completed their work prior to the installation of the resilient athletic flooring. The general contractor or construction manager shall maintain a secure and clean working environment before, during and after the installation.

D. Maintain a stable room temperature of at least 65°F for a minimum of one (1) week prior to, during and thereafter installation.

E. An effective low-permeance vapor barrier is placed directly beneath the concrete subfloor. For "on" or "below grade" installations, it is recommended to provide a permanent vapor barrier resistant to long term hydrostatic pressure/moisture exposure. Protrusions should be sealed to prevent moisture migration into the slab. Moisture should not be allowed to enter the slab after the completed construction.

F. Concrete subfloor surface pH level within the 7 to 11 range dependent upon installation type.

G. Concrete subfloor should be no greater than 1/8" within a 10 ft diameter. This tolerance can be measured in accordance with ASTM E1155. A specified (F_F) of 50 and an (F_L) of 30 should reach this degree of floor flatness and floor level. There is no numerical correlation between F numbers and the deviation from the straight

edge. However, the above specified numbers should achieve a flat floor with minimal deviation in the slab. Reference ACI 117 and ACI 302.1R. The general contractor should provide a certificate of compliance with the above recommendations.

H. Concrete subfloor must be clean and free of all foreign materials or objects including, but not limited to, curing compounds and sealers.

I. Fill cracks, grooves, voids, depressions, and other minor imperfections. Follow the manufacturer's directions. Moveable joints must be treated utilizing specific transitioning joint devices depending upon the architect's recommendations. Follow current ASTM F710 guidelines for the preparation of concrete slabs to receive resilient flooring.

J. Refer to ACI 302.2R "Guidelines for Concrete Slabs that Receive Moisture-Sensitive Flooring Materials" for concrete design and construction.

K. Concrete slab shall be fortified with continual steel reinforcement. Fiber reinforcement alone shall not be considered adequate fortification.

1.6 *WARRANTY*

A. Materials:
The indoor resilient athletic surfacing shall be covered by the manufacturer against surfacing product defects for 30 years. The manufacturer of the indoor resilient multipurpose surfacing must provide this warranty upon request.

B. Installation:
The installation of the indoor resilient multipurpose surfacing shall be covered against poor workmanship and faulty installation by a two (2) year written, limited warranty provided by the contractor performing/overseeing the installation.

1.7 *ADDITIONAL MATERIALS*

A. Furnish to the owner additional materials containing a total of at least 1% of each different color or design of the indoor resilient athletic surfacing used on the project.

1.8 *LEED™ CERTIFICATION*

A. The indoor resilient athletic surfacing should be able to help this facility to achieve points towards *LEED™ certification.* Flooring system must be certified by FloorScore.

B. LEED categories positively affected by the indoor resilient athletic surfacing:

Product Type			PU with Recycled Base Layer
Building Reuse Maintain Interior Nonstructural Elements	**MR 1.2**	Renovation	1
Construction Waste Management	**MR 2**	Renovation	2
Recycled Content	**MR 4** **20% - 2 points**	New/Renovation	2
Regional Materials	**MR 5** **20% - 2 points**	New/Renovation	2
Materials and Resources Rapidly Renewable Materials	**MR 6**	New/Renovation	1
Indoor Environmental Air Quality Low VOC Adhesives/Sealants	**IEQ 4.1**	New/Renovation	1
Low-emitting Materials Paints and Coatings	**IEQ 4.2**	New/Renovation	1

PART 2 - PRODUCTS

2.1 *MANUFACTURERS*

A. The basis of the design for the indoor resilient multipurpose surfacing is Polyturf Plus Pad and Pour 7+2 and Lumaflex system as manufactured by Tarkett.
B. All other installation accessories and related components must be either made or approved by the indoor resilient athletic surfacing manufacturer.
C. Other products may be approved as equal if deemed qualified and submitted in accordance with the General Conditions.
D. Test reports confirming compliance from an independent sports laboratory must be provided along with samples, technical data, installation, maintenance, and warranty prior to acceptance as an alternative product.

2.2 *MATERIALS*

Flooring System:
Polyturf Plus Pad and Pour 7+2 (9 mm total thickness) consists of a recycled resilient sheet force reduction layer integrated with seamless, liquid applied, and self-leveling 2 mm polyurethane topcoat.

A durable protective color coat shall be applied to a thickness of approximately 7 mils. The finished product shall be a seamless surface heterogeneous resilient multipurpose synthetic flooring system. System shall comply with the following criteria. Colors to be selected from manufacturer's standard range.

The Lumaflex System shall incorporate Lumaflex double tongue and grooved multi-ply engineered panels, force reduction cushion, and appropriate vapor retarder.

A. Physical properties of the indoor resilient athletic surfacing shall conform to the following minimums:

Properties	Standards	PolyTurf Plus Pad & Pour Base Mat + Wear Coat +Top Coat		
Base Mat Properties				
Width		59″		
Length		82 lin. ft		
Weight		1.2 lb/sq ft		
Density	ASTM D297	.67 min (g/cm□)		
Tensile Strength	ASTM D412	88 psi (Die Cast C)		
Elongation	ASTM D412	48.5% (Die Cast C)		
Compression	ASTM F36	@50 psi	@100 psi	@200 psi
		87%	91%	91%
Tear Strength	ASTM D624	30 PPI Die C		
Flexibility	ASTM F147	0-1		
Compression Set B	ASTM D395	37% (25% deflection 158°F/22hrs)		
Compression Set B	ASTM D395	26% (50% deflection 158°F/22hrs)		
2mm Wear Coat Properties				
Shore Hardness	Shore A	80		
Tensile Strength	ASTM D412	1600psi		
Elongation	ASTM D412	150%		
Tear Strength	ASTM D624	122PLI		
Misc Techical				
Environmental Certification	GreenGuard	GreenGuard Plus Certified		
Sports Characteristics				
Overall Thickness			40 mm	
Shock Absorption	ASTM F2772		Class 4	
Ball Bounce	ASTM F2772	>90%		
Vertical Deformation	ASTM F2772	Passed		
Surface Finish Effect	ASTM F2772	Passed		

B. Adhesive: As approved by the indoor resilient athletic surfacing manufacturer.

C. Game Line Paint and Primer: As approved by the indoor resilient athletic surfacing manufacturer.

D. Colors selected from standard color range.

PART 3 - EXECUTION

3.1 *EXAMINATION*

A. It is the responsibility of the general contractor/construction manager to ensure that project/site conditions are acceptable for the installation of the indoor resilient athletic flooring.
B. Verify that the area in which the indoor resilient athletic surfacing will be installed is dry and weather tight. Verify that permanent heat, light and ventilation are installed and operable.
C. Verify that all other work that could cause damage, dirt and dust or interrupt the normal pace of the indoor resilient athletic flooring installation is completed or suspended.
D. Verify that there is a stable room temperature of at least 65◦F.
E. Verify that there are no foreign materials or objects on the subfloor and that the subfloor is clean and ready for installation.
F. *Concrete Subfloor: moisture content less than 85% RH when tested per ASTM F2170.*
G. Follow Fieldturf USA, Inc. installation recommendations.
H. Do not average the results of the tests. Report all field test results in writing to the General Contractor, Architect, and End User prior to installation.
I. Verify that the concrete subfloor surface pH level is within the 7 - 11 range.
J. Document the results confirming the slab is within manufacturer's tolerances for slab deviation.

3.2 *PREPARATION OF SURFACES*

A. Sand the entire surface of the concrete slab.
B. Sweep the concrete slab so as to remove all dirt and dust. If a sweeping compound is to be used it must be a sweeping compound that does not contain oil or other items that may inhibit the adhesive bond.
C. Slab must be dust free. In the event that dust impairs adhesive bond, priming the slab prior to application of adhesive may be necessary. Follow installation guidelines.
D. Follow OSHA guidelines.

3.3 *INSTALLATION*

A. The installation area shall be closed to all traffic and activity for a period to be set by the indoor resilient athletic surfacing installer. The indoor resilient athletic surfacing installation shall not begin until the installer is familiar with the existing conditions.
B. All necessary precautions should be taken to minimize noise, smell, dust, the use of hazardous materials and any other items that may inconvenience others.
C. Install the indoor resilient athletic surfacing in strict accordance with the indoor resilient athletic surfacing manufacturer's written instructions.
D. Paint game lines using approved game line paint primer and game line paint in strict accordance with the game line paint manufacturer's instructions.
E. Install appropriate threshold plates or transition strips where necessary.

2.0 *CLEANING*

A. Remove all unused materials, tools, and equipment and dispose of any debris properly. Clean the indoor resilient athletic surfacing in accordance with the manufacturer's instructions.

3.6 *PROTECTION*

A. If required, protect the indoor resilient athletic surfacing from damage using coverings approved by the manufacturer until acceptance of work by the customer or their authorized representative.

3.7 *RELATED STANDARDS AND GUIDELINES*

A. ASTM F2170 "Standard Test Method for Determining Relative Humidity In Concrete Floor Slabs Using In-Situ Probes"
B. ASTM F710 "Standard Practice for Preparing Concrete Floors to Receive Resilient Flooring"
C. ACI 302.2R-06 "Guideline for Concrete Slabs that Receive Moisture-Sensitive Flooring Materials"
D. ASTM F2772-11 "Standard Specification for Athletic Performance Properties of Indoor Sports Floor Systems"

END OF SECTION

SECTION 09 65 66
ARCHITECTURAL SPECIFICATIONS FOR INDOOR RESILIENT ATHLETIC SURFACING

PART 1 – GENERAL

1.1 *SECTION INCLUDES*

A. Supply and installation of the indoor resilient multipurpose surfacing
B. Application of the game lines
C. References for the correct construction and preparation of concrete slabs to receive resilient flooring.

1.2 *SUBMITTALS*

A. Product Data:
   1. Manufacturer's promotional brochures, specifications and installation instructions
B. Manufacturer Certifications:
   1. Provide certification that accurately identifies the Original Equipment Manufacturer (OEM) of flooring furnished for this project including manufacturer's name, address and factory location.
   2. Suppliers of private label flooring for this project must identify themselves as such and fully disclose the OEM information listed above.
   3. All "manufacturer" requirements in these specifications must be complied with by the OEM, including warranties, certifications, qualifications, product data, test results, environmental requirements, performance data, etc.
C. Samples:
   1. Submit for selection and approval three (3) sets of the indoor resilient multipurpose surfacing, manufacturer's brochures, samples or sample boards of all of the available colors, textures and styles.
   2. Submit color samples of all the available game line paint colors for selection and approval.
D. Closeout Submittals:
   1. Submit three (3) copies of the indoor resilient multipurpose surfacing and manufacturer's maintenance instructions.
   2. Submit three (3) copies of the material and installation warranties as specified.

1.3 *QUALITY ASSURANCE*

A. Qualifications:
   1. The indoor resilient multipurpose surfacing shall have been actively marketed for a minimum of ten (10) years.
   2. The indoor resilient multipurpose surfacing shall be manufactured in an ISO 9001 certified plant.
   3. The indoor resilient multipurpose surfacing shall be manufactured in an ISO 14001 certified plant.
   4. The indoor resilient multipurpose surfacing supplier shall be an established firm, experienced in the field, and competent in the techniques required by the manufacturer.
   5. The installer of the indoor resilient multipurpose surfacing shall have a minimum of five (5) years of experience in the field installing indoor resilient multipurpose surfacing and have worked on at least five (5) projects of similar size, type and complexity.

B. Certifications:
   1. Installer to submit the indoor resilient athletic surfacing manufacturer's certification attesting that they are a trained installer of the indoor resilient multipurpose surfacing.
   2. The indoor resilient multipurpose surfacing manufacturer to submit official ISO 9001 certification for the facility in which the indoor resilient multipurpose surfacing is manufactured.

C. Testing:
   1. Tests shall be relative for multi-purpose use with certificates from independent testing resources to be made available upon request.
   2. Test results shall be no more than 5 years old and performed according to ASTM standard testing procedures.

1.4 *DELIVERY, STORAGE AND HANDLING*

A. Delivery:
   Material shall not be delivered until all related work is in place and finished and/or proper storage facilities and conditions can be provided and guaranteed stable according to FieldTurf USA, Inc. recommendations.

B. Storage:
   1. Store the material in a secure, clean and dry location.
   2. Maintain temperature between 55° and 85° Fahrenheit.
   3. Store the indoor resilient athletic surfacing rolls in an upright position on a smooth flat surface immediately upon delivery to jobsite.
   4. Rolls shipped in rigid protective cardboard containers can be laid horizontally prior to unpacking and installation.

1.5 *PROJECT/SITE CONDITIONS*

A. It is the responsibility of the general contractor/construction manager to maintain project/site conditions acceptable for the installation of the indoor resilient multipurpose flooring.

B. The area in which the indoor resilient multipurpose surfacing will be installed shall be dry and weather tight. Permanent heat, light and ventilation shall be installed and operable.

C. All other trades shall have completed their work prior to the installation of the resilient athletic flooring. The general contractor or construction manager shall maintain a secure and clean working environment before, during and after the installation.

D. Maintain a stable room temperature of at least 65°F for a minimum of one (1) week prior to, during and thereafter installation.

E. An effective low-permeance vapor barrier is placed directly beneath the concrete subfloor. For "on" or "below grade" installations, it is recommended to provide a permanent vapor barrier resistant to long term hydrostatic pressure/moisture exposure. Protrusions should be sealed to prevent moisture migration into the slab. Moisture should not be allowed to enter the slab after the completed construction.

F. Concrete subfloor surface pH level within the 7 to 11 range dependent upon installation type.

G. Concrete subfloor should be no greater than 1/8" within a 10 ft diameter. This tolerance can be measured in accordance with ASTM E1155. A specified (F_F) of 50 and an (F_L) of 30 should reach this degree of floor flatness and floor level. There is no numerical correlation between F numbers and the deviation from the straight

edge. However, the above specified numbers should achieve a flat floor with minimal deviation in the slab. Reference ACI 117 and ACI 302.1R. The general contractor should provide a certificate of compliance with the above recommendations.

H. Concrete subfloor must be clean and free of all foreign materials or objects including, but not limited to, curing compounds and sealers.

I. Fill cracks, grooves, voids, depressions, and other minor imperfections. Follow the manufacturer's directions. Moveable joints must be treated utilizing specific transitioning joint devices depending upon the architect's recommendations. Follow current ASTM F710 guidelines for the preparation of concrete slabs to receive resilient flooring.

J. Refer to ACI 302.2R "Guidelines for Concrete Slabs that Receive Moisture-Sensitive Flooring Materials" for concrete design and construction.

K. Concrete slab shall be fortified with continual steel reinforcement. Fiber reinforcement alone shall not be considered adequate fortification.

1.6 *WARRANTY*

A. Materials:
The indoor resilient athletic surfacing shall be covered by the manufacturer against surfacing product defects for 30 years. The manufacturer of the indoor resilient multipurpose surfacing must provide this warranty upon request.

B. Installation:
The installation of the indoor resilient multipurpose surfacing shall be covered against poor workmanship and faulty installation by a two (2) year written, limited warranty provided by the contractor performing/overseeing the installation.

1.7 *ADDITIONAL MATERIALS*

A. Furnish to the owner additional materials containing a total of at least 1% of each different color or design of the indoor resilient athletic surfacing used on the project.

1.8 *LEED™ CERTIFICATION*

A. The indoor resilient athletic surfacing should be able to help this facility to achieve points towards *LEED™ certification.* Flooring system must be certified by FloorScore.

B. LEED categories positively affected by the indoor resilient athletic surfacing:

Product Type			PU with Recycled Base Layer
Building Reuse Maintain Interior Nonstructural Elements	**MR 1.2**	Renovation	1
Construction Waste Management	**MR 2**	Renovation	2
Recycled Content	**MR 4** **20% - 2 points**	New/Renovation	2
Regional Materials	**MR 5** **20% - 2 points**	New/Renovation	2
Materials and Resources Rapidly Renewable Materials	**MR 6**	New/Renovation	1
Indoor Environmental Air Quality Low VOC Adhesives/Sealants	**IEQ 4.1**	New/Renovation	1
Low-emitting Materials Paints and Coatings	**IEQ 4.2**	New/Renovation	1

PART 2 - PRODUCTS

2.1 *MANUFACTURERS*

A. The basis of the design for the indoor resilient multipurpose surfacing is Polyturf Plus Elite Pad and Pour 9+2 and Lumaflex system as manufactured by Tarkett.
B. All other installation accessories and related components must be either made or approved by the indoor resilient athletic surfacing manufacturer.
C. Other products may be approved as equal if deemed qualified and submitted in accordance with the General Conditions.
D. Test reports confirming compliance from an independent sports laboratory must be provided along with samples, technical data, installation, maintenance, and warranty prior to acceptance as an alternative product.

2.2 *MATERIALS*

Flooring System:
Polyturf Plus Elite 9+2 (11mm total thickness) consists of a recycled resilient sheet force reduction layer integrated with seamless, liquid applied, and self-leveling 2 mm polyurethane topcoat.

A durable protective color coat shall be applied to a thickness of approximately 7 mils. The finished product shall be a seamless surface heterogeneous resilient multipurpose synthetic flooring system. System shall comply with the following criteria. Colors to be selected from manufacturer's standard range.

The Lumaflex System shall incorporate Lumaflex double tongue and grooved multi-ply engineered panels, force reduction cushion, and appropriate vapor retarder.

A. Physical properties of the indoor resilient athletic surfacing shall conform to the following minimums:

Properties	Standards	PolyTurf Plus Pad & Pour Base Mat + Wear Coat +Top Coat		
Base Mat Properties				
Width		59″		
Length		82 lin. ft		
Weight		1.2 lb/sq ft		
Density	ASTM D297	.67 min (g/cm□)		
Tensile Strength	ASTM D412	88 psi (Die Cast C)		
Elongation	ASTM D412	48.5% (Die Cast C)		
Compression	ASTM F36	@50 psi	@100 psi	@200 psi
		87%	91%	91%
Tear Strength	ASTM D624	30 PPI Die C		
Flexibility	ASTM F147	0-1		
Compression Set B	ASTM D395	37% (25% deflection 158°F/22hrs)		
Compression Set B	ASTM D395	26% (50% deflection 158°F/22hrs)		
2mm Wear Coat Properties				
Shore Hardness	Shore A	80		
Tensile Strength	ASTM D412	1600psi		
Elongation	ASTM D412	150%		
Tear Strength	ASTM D624	122PLI		
Misc Techical				
Environmental Certification	GreenGuard	GreenGuard Plus Certified		
Sports Characteristics				
Overall Thickness			42 mm	
Shock Absorption	ASTM F2772		Class 5	
Ball Bounce	ASTM F2772	>90%		
Vertical Deformation	ASTM F2772	Passed		
Surface Finish Effect	ASTM F2772	Passed		

B. Adhesive: As approved by the indoor resilient athletic surfacing manufacturer.
C. Game Line Paint and Primer: As approved by the indoor resilient athletic surfacing manufacturer.
D. Colors selected from standard color range.

PART 3 - EXECUTION

3.1 *EXAMINATION*

A. It is the responsibility of the general contractor/construction manager to ensure that project/site conditions are acceptable for the installation of the indoor resilient athletic flooring.
B. Verify that the area in which the indoor resilient athletic surfacing will be installed is dry and weather tight. Verify that permanent heat, light and ventilation are installed and operable.
C. Verify that all other work that could cause damage, dirt and dust or interrupt the normal pace of the indoor resilient athletic flooring installation is completed or suspended.
D. Verify that there is a stable room temperature of at least 65°F.
E. Verify that there are no foreign materials or objects on the subfloor and that the subfloor is clean and ready for installation.
F. *Concrete Subfloor: moisture content less than 85% RH when tested per ASTM F2170.*
G. Follow Fieldturf USA, Inc. installation recommendations.
H. Do not average the results of the tests. Report all field test results in writing to the General Contractor, Architect, and End User prior to installation.
I. Verify that the concrete subfloor surface pH level is within the 7 - 11 range.
J. Document the results confirming the slab is within manufacturer's tolerances for slab deviation.

3.2 *PREPARATION OF SURFACES*

A. Sand the entire surface of the concrete slab.
B. Sweep the concrete slab so as to remove all dirt and dust. If a sweeping compound is to be used it must be a sweeping compound that does not contain oil or other items that may inhibit the adhesive bond.
C. Slab must be dust free. In the event that dust impairs adhesive bond, priming the slab prior to application of adhesive may be necessary. Follow installation guidelines.
D. Follow OSHA guidelines.

3.3 *INSTALLATION*

A. The installation area shall be closed to all traffic and activity for a period to be set by the indoor resilient athletic surfacing installer. The indoor resilient athletic surfacing installation shall not begin until the installer is familiar with the existing conditions.
B. All necessary precautions should be taken to minimize noise, smell, dust, the use of hazardous materials and any other items that may inconvenience others.
C. Install the indoor resilient athletic surfacing in strict accordance with the indoor resilient athletic surfacing manufacturer's written instructions.
D. Paint game lines using approved game line paint primer and game line paint in strict accordance with the game line paint manufacturer's instructions.
E. Install appropriate threshold plates or transition strips where necessary.

2.0 *CLEANING*

A. Remove all unused materials, tools, and equipment and dispose of any debris properly. Clean the indoor resilient athletic surfacing in accordance with the manufacturer's instructions.

3.6 *PROTECTION*

A. If required, protect the indoor resilient athletic surfacing from damage using coverings approved by the manufacturer until acceptance of work by the customer or their authorized representative.

3.7 *RELATED STANDARDS AND GUIDELINES*

A. ASTM F2170 "Standard Test Method for Determining Relative Humidity In Concrete Floor Slabs Using In-Situ Probes"
B. ASTM F710 "Standard Practice for Preparing Concrete Floors to Receive Resilient Flooring"
C. ACI 302.2R-06 "Guideline for Concrete Slabs that Receive Moisture-Sensitive Flooring Materials"
D. ASTM F2772-11 "Standard Specification for Athletic Performance Properties of Indoor Sports Floor Systems"

END OF SECTION

SECTION 09 65 66
ARCHITECTURAL SPECIFICATIONS FOR INDOOR RESILIENT ATHLETIC SURFACING

PART 1 – GENERAL

1.1 *SECTION INCLUDES*

A. Supply and installation of the indoor resilient multipurpose surfacing
B. Application of the game lines
C. References for the correct construction and preparation of concrete slabs to receive resilient flooring.

1.2 *SUBMITTALS*

A. Product Data:
   1. Manufacturer's promotional brochures, specifications and installation instructions
B. Manufacturer Certifications:
   1. Provide certification that accurately identifies the Original Equipment Manufacturer (OEM) of flooring furnished for this project including manufacturer's name, address and factory location.
   2. Suppliers of private label flooring for this project must identify themselves as such and fully disclose the OEM information listed above.
   3. All "manufacturer" requirements in these specifications must be complied with by the OEM, including warranties, certifications, qualifications, product data, test results, environmental requirements, performance data, etc.
C. Samples:
   1. Submit for selection and approval three (3) sets of the indoor resilient multipurpose surfacing, manufacturer's brochures, samples or sample boards of all of the available colors, textures and styles.
   2. Submit color samples of all the available game line paint colors for selection and approval.
D. Closeout Submittals:
   1. Submit three (3) copies of the indoor resilient multipurpose surfacing and manufacturer's maintenance instructions.
   2. Submit three (3) copies of the material and installation warranties as specified.

1.3 *QUALITY ASSURANCE*

A. Qualifications:
   1. The indoor resilient multipurpose surfacing shall have been actively marketed for a minimum of ten (10) years.
   2. The indoor resilient multipurpose surfacing shall be manufactured in an ISO 9001 certified plant.
   3. The indoor resilient multipurpose surfacing shall be manufactured in an ISO 14001 certified plant.
   4. The indoor resilient multipurpose surfacing supplier shall be an established firm, experienced in the field, and competent in the techniques required by the manufacturer.
   5. The installer of the indoor resilient multipurpose surfacing shall have a minimum of five (5) years of experience in the field installing indoor resilient multipurpose surfacing and have worked on at least five (5) projects of similar size, type and complexity.

B. Certifications:
   1. Installer to submit the indoor resilient athletic surfacing manufacturer's certification attesting that they are a trained installer of the indoor resilient multipurpose surfacing.
   2. The indoor resilient multipurpose surfacing manufacturer to submit official ISO 9001 certification for the facility in which the indoor resilient multipurpose surfacing is manufactured.

C. Testing:
   1. Tests shall be relative for multi-purpose use with certificates from independent testing resources to be made available upon request.
   2. Test results shall be no more than 5 years old and performed according to ASTM standard testing procedures.

1.4 *DELIVERY, STORAGE AND HANDLING*

A. Delivery:
   Material shall not be delivered until all related work is in place and finished and/or proper storage facilities and conditions can be provided and guaranteed stable according to FieldTurf USA, Inc. recommendations.

B. Storage:
   1. Store the material in a secure, clean and dry location.
   2. Maintain temperature between 55° and 85° Fahrenheit.
   3. Store the indoor resilient athletic surfacing rolls in an upright position on a smooth flat surface immediately upon delivery to jobsite.
   4. Rolls shipped in rigid protective cardboard containers can be laid horizontally prior to unpacking and installation.

1.5 *PROJECT/SITE CONDITIONS*

A. It is the responsibility of the general contractor/construction manager to maintain project/site conditions acceptable for the installation of the indoor resilient multipurpose flooring.

B. The area in which the indoor resilient multipurpose surfacing will be installed shall be dry and weather tight. Permanent heat, light and ventilation shall be installed and operable.

C. All other trades shall have completed their work prior to the installation of the resilient athletic flooring. The general contractor or construction manager shall maintain a secure and clean working environment before, during and after the installation.

D. Maintain a stable room temperature of at least 65°F for a minimum of one (1) week prior to, during and thereafter installation.

E. An effective low-permeance vapor barrier is placed directly beneath the concrete subfloor. For "on" or "below grade" installations, it is recommended to provide a permanent vapor barrier resistant to long term hydrostatic pressure/moisture exposure. Protrusions should be sealed to prevent moisture migration into the slab. Moisture should not be allowed to enter the slab after the completed construction.

F. Concrete subfloor surface pH level within the 7 to 11 range dependent upon installation type.

G. Concrete subfloor should be no greater than 1/8" within a 10 ft diameter. This tolerance can be measured in accordance with ASTM E1155. A specified (F_F) of 50 and an (F_L) of 30 should reach this degree of floor flatness and floor level. There is no numerical correlation between F numbers and the deviation from the straight

edge. However, the above specified numbers should achieve a flat floor with minimal deviation in the slab. Reference ACI 117 and ACI 302.1R. The general contractor should provide a certificate of compliance with the above recommendations.

H. Concrete subfloor must be clean and free of all foreign materials or objects including, but not limited to, curing compounds and sealers.

I. Fill cracks, grooves, voids, depressions, and other minor imperfections. Follow the manufacturer's directions. Moveable joints must be treated utilizing specific transitioning joint devices depending upon the architect's recommendations. Follow current ASTM F710 guidelines for the preparation of concrete slabs to receive resilient flooring.

J. Refer to ACI 302.2R "Guidelines for Concrete Slabs that Receive Moisture-Sensitive Flooring Materials" for concrete design and construction.

K. Concrete slab shall be fortified with continual steel reinforcement. Fiber reinforcement alone shall not be considered adequate fortification.

1.6 *WARRANTY*

A. Materials:
The indoor resilient athletic surfacing shall be covered by the manufacturer against surfacing product defects for 30 years. The manufacturer of the indoor resilient multipurpose surfacing must provide this warranty upon request.

B. Installation:
The installation of the indoor resilient multipurpose surfacing shall be covered against poor workmanship and faulty installation by a two (2) year written, limited warranty provided by the contractor performing/overseeing the installation.

1.7 *ADDITIONAL MATERIALS*

A. Furnish to the owner additional materials containing a total of at least 1% of each different color or design of the indoor resilient athletic surfacing used on the project.

1.8 *LEED™ CERTIFICATION*

A. The indoor resilient athletic surfacing should be able to help this facility to achieve points towards *LEED™ certification.* Flooring system must be certified by FloorScore.

B. LEED categories positively affected by the indoor resilient athletic surfacing:

Product Type			PU with Recycled Base Layer
Building Reuse Maintain Interior Nonstructural Elements	**MR 1.2**	Renovation	1
Construction Waste Management	**MR 2**	Renovation	2
Recycled Content	**MR 4** **20% - 2 points**	New/Renovation	2
Regional Materials	**MR 5** **20% - 2 points**	New/Renovation	2
Materials and Resources Rapidly Renewable Materials	**MR 6**	New/Renovation	1
Indoor Environmental Air Quality Low VOC Adhesives/Sealants	**IEQ 4.1**	New/Renovation	1
Low-emitting Materials Paints and Coatings	**IEQ 4.2**	New/Renovation	1

PART 2 - PRODUCTS

2.1 *MANUFACTURERS*

A. The basis of the design for the indoor resilient multipurpose surfacing is Polyturf Plus Pad and Pour 9+2 and Lumaflex system as manufactured by Tarkett.
B. All other installation accessories and related components must be either made or approved by the indoor resilient athletic surfacing manufacturer.
C. Other products may be approved as equal if deemed qualified and submitted in accordance with the General Conditions.
D. Test reports confirming compliance from an independent sports laboratory must be provided along with samples, technical data, installation, maintenance, and warranty prior to acceptance as an alternative product.

2.2 *MATERIALS*

Flooring System:
Polyturf Plus Pad and Pour 9+2 (11mm total thickness) consists of a recycled resilient sheet force reduction layer integrated with seamless, liquid applied, and self-leveling 2 mm polyurethane topcoat.

A durable protective color coat shall be applied to a thickness of approximately 7 mils. The finished product shall be a seamless surface heterogeneous resilient multipurpose synthetic flooring system. System shall comply with the following criteria. Colors to be selected from manufacturer's standard range.

The Lumaflex System shall incorporate Lumaflex double tongue and grooved multi-ply engineered panels, force reduction cushion, and appropriate vapor retarder.

A. Physical properties of the indoor resilient athletic surfacing shall conform to the following minimums:

Properties	Standards	PolyTurf Plus Pad & Pour Base Mat + Wear Coat +Top Coat		
Base Mat Properties				
Width		59″		
Length		82 lin. ft		
Weight		1.2 lb/sq ft		
Density	ASTM D297	.67 min (g/cm□)		
Tensile Strength	ASTM D412	88 psi (Die Cast C)		
Elongation	ASTM D412	48.5% (Die Cast C)		
Compression	ASTM F36	@50 psi	@100 psi	@200 psi
		87%	91%	91%
Tear Strength	ASTM D624	30 PPI Die C		
Flexibility	ASTM F147	0-1		
Compression Set B	ASTM D395	37% (25% deflection 158°F/22hrs)		
Compression Set B	ASTM D395	26% (50% deflection 158°F/22hrs)		
2mm Wear Coat Properties				
Shore Hardness	Shore A	80		
Tensile Strength	ASTM D412	1600psi		
Elongation	ASTM D412	150%		
Tear Strength	ASTM D624	122PLI		
Misc Techical				
Environmental Certification	GreenGuard	GreenGuard Plus Certified		
Sports Characteristics				
Overall Thickness			42 mm	
Shock Absorption	ASTM F2772		Class 4	
Ball Bounce	ASTM F2772	>90%		
Vertical Deformation	ASTM F2772	Passed		
Surface Finish Effect	ASTM F2772	Passed		

B. Adhesive: As approved by the indoor resilient athletic surfacing manufacturer.

C. Game Line Paint and Primer: As approved by the indoor resilient athletic surfacing manufacturer.

D. Colors selected from standard color range.

PART 3 - EXECUTION

3.1 *EXAMINATION*

A. It is the responsibility of the general contractor/construction manager to ensure that project/site conditions are acceptable for the installation of the indoor resilient athletic flooring.
B. Verify that the area in which the indoor resilient athletic surfacing will be installed is dry and weather tight. Verify that permanent heat, light and ventilation are installed and operable.
C. Verify that all other work that could cause damage, dirt and dust or interrupt the normal pace of the indoor resilient athletic flooring installation is completed or suspended.
D. Verify that there is a stable room temperature of at least 65°F.
E. Verify that there are no foreign materials or objects on the subfloor and that the subfloor is clean and ready for installation.
F. *Concrete Subfloor: moisture content less than 85% RH when tested per ASTM F2170.*
G. Follow Fieldturf USA, Inc. installation recommendations.
H. Do not average the results of the tests. Report all field test results in writing to the General Contractor, Architect, and End User prior to installation.
I. Verify that the concrete subfloor surface pH level is within the 7 - 11 range.
J. Document the results confirming the slab is within manufacturer's tolerances for slab deviation.

3.2 *PREPARATION OF SURFACES*

A. Sand the entire surface of the concrete slab.
B. Sweep the concrete slab so as to remove all dirt and dust. If a sweeping compound is to be used it must be a sweeping compound that does not contain oil or other items that may inhibit the adhesive bond.
C. Slab must be dust free. In the event that dust impairs adhesive bond, priming the slab prior to application of adhesive may be necessary. Follow installation guidelines.
D. Follow OSHA guidelines.

3.3 *INSTALLATION*

A. The installation area shall be closed to all traffic and activity for a period to be set by the indoor resilient athletic surfacing installer. The indoor resilient athletic surfacing installation shall not begin until the installer is familiar with the existing conditions.
B. All necessary precautions should be taken to minimize noise, smell, dust, the use of hazardous materials and any other items that may inconvenience others.
C. Install the indoor resilient athletic surfacing in strict accordance with the indoor resilient athletic surfacing manufacturer's written instructions.
D. Paint game lines using approved game line paint primer and game line paint in strict accordance with the game line paint manufacturer's instructions.
E. Install appropriate threshold plates or transition strips where necessary.

2.0 *CLEANING*

A. Remove all unused materials, tools, and equipment and dispose of any debris properly. Clean the indoor resilient athletic surfacing in accordance with the manufacturer's instructions.

3.6 *PROTECTION*

A. If required, protect the indoor resilient athletic surfacing from damage using coverings approved by the manufacturer until acceptance of work by the customer or their authorized representative.

3.7 *RELATED STANDARDS AND GUIDELINES*

A. ASTM F2170 "Standard Test Method for Determining Relative Humidity In Concrete Floor Slabs Using In-Situ Probes"
B. ASTM F710 "Standard Practice for Preparing Concrete Floors to Receive Resilient Flooring"
C. ACI 302.2R-06 "Guideline for Concrete Slabs that Receive Moisture-Sensitive Flooring Materials"
D. ASTM F2772-11 "Standard Specification for Athletic Performance Properties of Indoor Sports Floor Systems"

END OF SECTION

SECTION 09645
ARCHITECTURAL SPECIFICATIONS FOR INDOOR RESILIENT ATHLETIC SURFACING

PART 1 – GENERAL

1.1 *SECTION INCLUDES*

A. Supply and installation of the indoor resilient multipurpose surfacing
B. Application of the game lines
C. References for the construction and preparation of concrete slabs to receive resilient flooring.

1.2 *SUBMITTALS*

A. Product Data:
Manufacturer's promotional brochures, specifications and installation instructions
B. Samples:
1. Submit for selection and approval three (3) sets of the indoor resilient multipurpose surfacing, manufacturer's brochures, samples or sample boards of all of the available colors, textures and styles.
2. Submit color samples of all the available game line paint colors for selection and approval.
C. Closeout Submittals:
1. Submit three (3) copies of the indoor resilient multipurpose surfacing and manufacturer's maintenance instructions.
2. Submit three (3) copies of the material and installation warranties as specified.

1.3 *QUALITY ASSURANCE*

A. Qualifications:
1. The indoor resilient multipurpose surfacing shall have been actively marketed for a minimum of ten (10) years.
2. The indoor resilient multipurpose surfacing shall be manufactured in an ISO 9001 certified plant.
4. The indoor resilient multipurpose surfacing supplier shall be an established firm, experienced in the field, and appointed as a distributor by the manufacturer of the indoor resilient multipurpose surfacing.
5. The installer of the indoor resilient multipurpose surfacing shall have a minimum of five (5) years of experience in the field installing indoor resilient multipurpose surfacing and have worked on at least five (5) projects of similar size, type and complexity.
B. Certifications:
1. Installer to submit the indoor resilient athletic surfacing manufacturer's certification attesting that they are an approved installer of the indoor resilient multipurpose surfacing.
2. The indoor resilient multipurpose surfacing manufacturer to submit official ISO 9001 certification for the facility in which the indoor resilient multipurpose surfacing is manufactured.

C. Testing:
Tests shall be relative for multi-purpose use with certificates from independent testing resources to be made available upon request. Test results shall be no more than 5 years old and performed according to ASTM standard testing procedures.

B. Certifications:
3. Installer to submit the indoor resilient athletic surfacing manufacturer's or distributor's certification attesting that they are an approved installer of the indoor resilient multipurpose surfacing.

C. Testing:
Tests shall be relative for multi-purpose use with certificates from independent testing resources to be made available upon request. Test results shall be no more than 5 years old and performed according to ASTM F2772 standard testing procedures for force reduction, ball bounce, vertical deformation, and surface finish effect.

1.4 *DELIVERY, STORAGE AND HANDLING*

A. Delivery:
Material shall not be delivered until all related work is in place and finished and/or proper storage facilities and conditions can be provided and guaranteed stable according to Fieldturf' recommendations.

B. Storage:
Store the material in a secure, clean and dry location. Maintain temperature between 55° and 85° Fahrenheit.

1.5 *PROJECT/SITE CONDITIONS*

A. It is the responsibility of the general contractor/construction manager to maintain project/site conditions acceptable for the installation of the indoor resilient multipurpose flooring.

B. The area in which the indoor resilient multipurpose surfacing will be installed shall be dry and weather tight. Permanent heat, light and ventilation shall be installed and operable.

C. All other trades shall have completed their work prior to the installation of the resilient athletic flooring. The general contractor or Construction Manager shall maintain a secure and clean working environment before, during and after the installation. Suspension of other trades' work may be authorized providing their work will not damage the new flooring.

D. Maintain a stable room temperature of at least 65°F for a minimum of one (1) week prior to, during, and thereafter installation.

E. An effective low-permeance vapor barrier is placed directly beneath the concrete subfloor. For "on" or "below grade" installations, it is recommended to provide a permanent vapor barrier resistant to long term hydrostatic pressure/moisture exposure. Protrusions should be sealed to prevent moisture migration into the slab. Moisture should not be allowed to

enter the slab after the completed construction.

F. Concrete subfloor surface pH level within the 7 to 10 range dependent upon installation type.
G. Concrete subfloor should be no greater than 1/8" within a 10 ft diameter. This tolerance can be measured in accordance with ASTM E1155. A specified (F_F) of 50 and an (F_L) of 30 should reach this degree of floor flatness and floor level. There is no numerical correlation between F numbers and the deviation from the straight edge, however the above specified numbers should achieve a flat floor with minimal deviation in the slab. Reference ACI 117 and ACI 302.1R. The general contractor should provide a certificate of compliance with the above recommendations.
H. Concrete subfloor must be clean and free of all foreign materials or objects including, but not limited to, curing compounds and sealers.
I. Fill cracks, grooves, voids, depressions, and other minor imperfections with Ardex (or equal) cement-based patching/leveling compounds. Follow the manufacturer's directions. Moveable joints must be treated utilizing specific transitioning joint devices depending upon the architect's recommendations. Follow current ASTM F710 guidelines for the preparation of concrete slabs to receive resilient flooring.
J. Refer to ACI 302.2R "Guidelines for Concrete Slabs that Receive Moisture-Sensitive Flooring Materials" for concrete design and construction.
K. Concrete slab shall be fortified with continual steel reinforcement. Fiber reinforcement alone shall not be considered adequate fortification.

1.6 *WARRANTY*

A. Materials:
The indoor resilient athletic surfacing shall be covered by the manufacturer against product defects for 30 years and moisture warranty for 10 years. The manufacturer of the indoor resilient multipurpose surfacing must provide this warranty upon request.
B. Installation:
The installation of the indoor resilient multipurpose surfacing shall be covered against poor workmanship and faulty installation by a two (2) year written, limited warranty provided by the contractor performing/overseeing the installation.

1.7 *ADDITIONAL MATERIALS*

Furnish to the owner additional materials containing a total of at least 1% of each different color or design of the indoor resilient athletic surfacing used on the project.

1.8 *LEED™ CERTIFICATION*

The indoor resilient athletic surfacing should be able to help this facility to achieve points towards *LEED™* certification.

LEED categories positively affected by the indoor resilient athletic surfacing:

Product Type			PU with Recycled Base Layer
Building Reuse Maintain Interior Nonstructural Elements	MR 1.2	Renovation	1
Construction Waste Management	MR 2	Renovation	2
Recycled Content	MR 4 20% - 2 points	New/Renovation	2
Regional Materials	MR 5 20% - 2 points	New/Renovation	2
Materials and Resources Rapidly Renewable Materials	MR 6	New/Renovation	1
Indoor Environmental Air Quality Low VOC Adhesives/Sealants	IEQ 4.1	New/Renovation	1
Low-emitting Materials Paints and Coatings	IEQ 4.2	New/Renovation	1

PART 2 - PRODUCTS

2.1 *MANUFACTURERS*

The basis of the design for the indoor resilient multipurpose surfacing is Polyturf Plus Pad and Pour as provided by Fieldturf or equal. Product shall be manufactured by an ISO 9001 company.

2.2 *MATERIALS.*

A.) Flooring System:

Polyturf Plus 12+2 (11mm total thickness) consists of a recycled resilient sheet force reduction layer integrated with seamless, liquid applied, and self-leveling 2 mm polyurethane topcoat.

A durable protective color coat shall be applied to a thickness of approximately 7 mils. The finished product shall be a seamless surface heterogeneous resilient multipurpose synthetic flooring system. System shall comply with the following criteria. Colors to be selected from manufacturer's standard range.

Properties	Standards	PolyTurf Plus Pad & Pour Base Mat + Wear Coat +Top Coat
Base Mat Properties		
Width		59″
Length		82 lin. ft
Weight		1.2 lb/sq ft
Density	ASTM D297	.67 min (g/cm?)
Tensile Strength	ASTM D412	88 psi (Die Cast C)
Elongation	ASTM D412	48.5% (Die Cast C)
Compression	ASTM F36	@50 psi 87% @100 psi 91% @200 psi 91%
Tear Strength	ASTM D624	30 PPI Die C
Flexibility	ASTM F147	0-1
Compression Set B	ASTM D395	37% (25% deflection 158°F/22hrs)
Compression Set B	ASTM D395	26% (50% deflection 158°F/22hrs)
2mm Wear Coat Properties		
Shore Hardness	Shore A	80
Tensile Strength	ASTM D412	3200 psi
Elongation	ASTM D412	340%
Tear Strength	ASTM D624	360 PLI
Misc Techical		
Fire Classification	ASTM E648	Class 1
Environmental Certification	GreenGuard	GreenGuard Plus Certified
Sports Characteristics		
Overall Thickness		12+2 (14mm)
Shock Absorption	ASTM F2772	Class 3
Ball Bounce	ASTM F2772	>90%
Vertical Deformation	ASTM F2772	Passed
Surface Finish Effect	ASTM F2772	Passed
Installation with Multi-Poxy	98% Per ASTM F2170	

Game Line Paint:

As approved by the indoor resilient athletic surfacing manufacturer. Colors are to be selected from the manufacturer's standard range.

PART 3 - EXECUTION

3.1 *EXAMINATION*

A. It is the responsibility of the general contractor/construction manager to ensure that project/site conditions are acceptable for the installation of the indoor resilient athletic flooring.

B. Verify that the area in which the indoor resilient athletic surfacing will be installed is dry and weather tight. Verify that permanent heat, light and ventilation is installed and operable.

C. Verify that all other work that could cause damage, dirt and dust or interrupt the normal pace of the indoor resilient athletic flooring installation is completed or suspended.

D. Verify that there is a stable room temperature of at least 65°F.

E. Verify that there are no foreign materials or objects on the subfloor and that the subfloor is clean and ready for installation.

F. Moisture content less than 98 % RH when tested per ASTM F2170. Follow Fieldturf Installation Recommendations.
G. If both tests are performed, use the highest value. Do not average the results of the tests. Report all field test results in writing to the General Contractor, Architect, and End User prior to installation.
H. Verify that the concrete subfloor surface pH level is within the 7 - 10 range.
I. Document the results indicating the slab is within manufacturer's tolerances for slab deviation.

3.2 *PREPARATION OF SURFACES*

A. Sand the entire surface of the concrete slab.
B. Sweep the concrete slab so as to remove all dirt and dust. If a sweeping compound is to be used it must be a sweeping compound that does not contain oil or other items that may inhibit the adhesive bond.
C. Slab must be dust free. In the event that dust impairs adhesive bond, priming the slab prior to application of adhesive may be necessary. Follow installation guidelines.

3.3 *INSTALLATION*

A. The installation area shall be closed to all traffic and activity for a period to be set by the indoor resilient athletic surfacing installer. The indoor resilient athletic surfacing installation shall not begin until the installer is familiar with the existing conditions.
B. All necessary precautions should be taken to minimize noise, smell, dust, the use of hazardous materials, and any other items that may inconvenience others.
C. Install the indoor resilient athletic surfacing in strict accordance with the indoor resilient athletic surfacing manufacturer's written instructions.
D. Paint game lines using approved game line paint primer and game line paint in strict accordance with the game line paint manufacturer's instructions.
E. Install appropriate threshold plates or transition strips where necessary.
F. Use only approved adhesive as recommended by the manufacturer.

3.4 *CLEANING*

A. Remove all unused materials, tools, and equipment and dispose of any debris properly. Clean the indoor resilient athletic surfacing in accordance with the manufacturer's instructions.

3.5 *PROTECTION*

If required, protect the indoor resilient athletic surfacing from damage using coverings approved by the manufacturer until acceptance of work by the customer or their authorized representative.

3.6 RELATED STANDARDS AND GUIDELINES

A. ASTM F2170 "Standard Test Method for Determining Relative Humidity In Concrete Floor Slabs Using In-Situ Probes"
B. ASTM F710 "Standard Practice for Preparing Concrete Floors to Receive

Resilient Flooring"

C. ACI 302.2R-06 "Guideline for Concrete Slabs that Receive Moisture-Sensitive Flooring Materials"

END OF SECTION

PART 1 – GENERAL

1.1 *SECTION INCLUDES*

A. Supply and installation of the indoor resilient multipurpose surfacing
B. Application of the game lines
C. References for the construction and preparation of concrete slabs to receive resilient flooring.

1.2 *SUBMITTALS*

A. Product Data:
Manufacturer's promotional brochures, specifications and installation instructions
B. Samples:
1. Submit for selection and approval three (3) sets of the indoor resilient multipurpose surfacing, manufacturer's brochures, samples or sample boards of all of the available colors, textures and styles.
2. Submit color samples of all the available game line paint colors for selection and approval.
C. Closeout Submittals:
1. Submit three (3) copies of the indoor resilient multipurpose surfacing and manufacturer's maintenance instructions.
2. Submit three (3) copies of the material and installation warranties as specified.

1.3 *QUALITY ASSURANCE*

A. Qualifications:
1. The indoor resilient multipurpose surfacing shall have been actively marketed for a minimum of ten (10) years.
2. The indoor resilient multipurpose surfacing shall be manufactured in an ISO 9001 certified plant.
4. The indoor resilient multipurpose surfacing supplier shall be an established firm, experienced in the field, and appointed as a distributor by the manufacturer of the indoor resilient multipurpose surfacing.
5. The installer of the indoor resilient multipurpose surfacing shall have a minimum of five (5) years of experience in the field installing indoor resilient multipurpose surfacing and have worked on at least five (5) projects of similar size, type and complexity.
B. Certifications:
1. Installer to submit the indoor resilient athletic surfacing manufacturer's certification attesting that they are an approved installer of the indoor resilient multipurpose surfacing.
2. The indoor resilient multipurpose surfacing manufacturer to submit official ISO 9001 certification for the facility in which the indoor resilient multipurpose surfacing is manufactured.

C. Testing:
Tests shall be relative for multi-purpose use with certificates from independent testing resources to be made available upon request. Test

results shall be no more than 5 years old and performed according to ASTM standard testing procedures.

B. Certifications:
   3. Installer to submit the indoor resilient athletic surfacing manufacturer's or distributor's certification attesting that they are an approved installer of the indoor resilient multipurpose surfacing.

C. Testing:
   Tests shall be relative for multi-purpose use with certificates from independent testing resources to be made available upon request. Test results shall be no more than 5 years old and performed according to ASTM F2772 standard testing procedures for force reduction, ball bounce, vertical deformation, and surface finish effect.

1.4 *DELIVERY, STORAGE AND HANDLING*

A. Delivery:
   Material shall not be delivered until all related work is in place and finished and/or proper storage facilities and conditions can be provided and guaranteed stable according to Fieldturf' recommendations.
B. Storage:
   Store the material in a secure, clean and dry location. Maintain temperature between 55° and 85° Fahrenheit.

1.5 *PROJECT/SITE CONDITIONS*

A. It is the responsibility of the general contractor/construction manager to maintain project/site conditions acceptable for the installation of the indoor resilient multipurpose flooring.
B. The area in which the indoor resilient multipurpose surfacing will be installed shall be dry and weather tight. Permanent heat, light and ventilation shall be installed and operable.
C. All other trades shall have completed their work prior to the installation of the resilient athletic flooring. The general contractor or Construction Manager shall maintain a secure and clean working environment before, during and after the installation. Suspension of other trades' work may be authorized providing their work will not damage the new flooring.
D. Maintain a stable room temperature of at least 65°F for a minimum of one (1) week prior to, during, and thereafter installation.
E. An effective low-permeance vapor barrier is placed directly beneath the concrete subfloor. For "on" or "below grade" installations, it is recommended to provide a permanent vapor barrier resistant to long term hydrostatic pressure/moisture exposure. Protrusions should be sealed to prevent moisture migration into the slab. Moisture should not be allowed to enter the slab after the completed construction.
F. Concrete subfloor surface pH level within the 7 to 10 range dependent upon installation type.
G. Concrete subfloor should be no greater than 1/8" within a 10 ft diameter. This tolerance can be measured in accordance with ASTM E1155.
   A specified (F_F) of 50 and an (F_L) of 30 should reach this degree of floor

flatness and floor level. There is no numerical correlation between F numbers and the deviation from the straight edge, however the above specified numbers should achieve a flat floor with minimal deviation in the slab. Reference ACI 117 and ACI 302.1R. The general contractor should provide a certificate of compliance with the above recommendations.

H. Concrete subfloor must be clean and free of all foreign materials or objects including, but not limited to, curing compounds and sealers.

I. Fill cracks, grooves, voids, depressions, and other minor imperfections with Ardex (or equal) cement-based patching/leveling compounds. Follow the manufacturer's directions. Moveable joints must be treated utilizing specific transitioning joint devices depending upon the architect's recommendations. Follow current ASTM F710 guidelines for the preparation of concrete slabs to receive resilient flooring.

J. Refer to ACI 302.2R "Guidelines for Concrete Slabs that Receive Moisture-Sensitive Flooring Materials" for concrete design and construction.

K. Concrete slab shall be fortified with continual steel reinforcement. Fiber reinforcement alone shall not be considered adequate fortification.

1.6 *WARRANTY*

A. Materials:
The indoor resilient athletic surfacing shall be covered by the manufacturer against product defects for 30 years and moisture warranty for 10 years. The manufacturer of the indoor resilient multipurpose surfacing must provide this warranty upon request.

B. Installation:
The installation of the indoor resilient multipurpose surfacing shall be covered against poor workmanship and faulty installation by a two (2) year written, limited warranty provided by the contractor performing/overseeing the installation.

1.7 *ADDITIONAL MATERIALS*

Furnish to the owner additional materials containing a total of at least 1% of each different color or design of the indoor resilient athletic surfacing used on the project.

1.8 *LEED™ CERTIFICATION*

The indoor resilient athletic surfacing should be able to help this facility to achieve points towards *LEED™* certification.

LEED categories positively affected by the indoor resilient athletic surfacing:

Product Type			PU with Recycled Base Layer
Building Reuse Maintain Interior Nonstructural Elements	**MR 1.2**	Renovation	1
Construction Waste Management	**MR 2**	Renovation	2
Recycled Content	**MR 4** **20% - 2 points**	New/Renovation	2
Regional Materials	**MR 5** **20% - 2 points**	New/Renovation	2

Materials and Resources Rapidly Renewable Materials	**MR 6**	New/Renovation	1
Indoor Environmental Air Quality Low VOC Adhesives/Sealants	**IEQ 4.1**	New/Renovation	1
Low-emitting Materials Paints and Coatings	**IEQ 4.2**	New/Renovation	1

PART 2 - PRODUCTS

2.1 *MANUFACTURERS*

The basis of the design for the indoor resilient multipurpose surfacing is Polyturf Plus Pad and Pour as provided by Fieldturf or equal. Product shall be manufactured by an ISO 9001 company.

2.2 *MATERIALS.*

A.) Flooring System:

Polyturf Plus 12+2 (11 mm total thickness) consists of a recycled resilient sheet force reduction layer integrated with seamless, liquid applied, and self-leveling 2 mm polyurethane topcoat.

A durable protective color coat shall be applied to a thickness of approximately 7 mils. The finished product shall be a seamless surface heterogeneous resilient multipurpose synthetic flooring system. System shall comply with the following criteria. Colors to be selected from manufacturer's standard range.

Properties	**Standards**	**PolyTurf Plus Pad & Pour** **Base Mat + Wear Coat +Top Coat**
Base Mat Properties		
Width		59"
Length		82 lin. ft
Weight		1.2 lb/sq ft
Density	ASTM D297	.67 min (g/cm?)
Tensile Strength	ASTM D412	88 psi (Die Cast C)
Elongation	ASTM D412	48.5% (Die Cast C)
Compression	ASTM F36	@50 psi 87% @100 psi 91% @200 psi 91%
Tear Strength	ASTM D624	30 PPI Die C
Flexibility	ASTM F147	0-1
Compression Set B	ASTM D395	37% (25% deflection 158°F/22hrs)
Compression Set B	ASTM D395	26% (50% deflection 158°F/22hrs)
2mm Wear Coat Properties		
Shore Hardness	Shore A	80
Tensile Strength	ASTM D412	3200 psi
Elongation	ASTM D412	340%
Tear Strength	ASTM D624	360 PLI
Misc Technical		
Fire Classification	ASTM E648	Class 2
Environmental Certification	GreenGuard	GreenGuard Plus Certified
Sports Characteristics		
Overall Thickness		12+2 (14 mm)
Shock Absorption	ASTM F2772	Class 3
Ball Bounce	ASTM F2772	>90%
Vertical Deformation	ASTM F2772	Passed
Surface Finish Effect	ASTM F2772	Passed
Installation with Tarkolay	100% Per ASTM F2170	

1. Game Line Paint:
As approved by the indoor resilient athletic surfacing manufacturer. Colors are to be selected from the manufacturer's standard range.

B. Tarkolay – A high quality low permeance slip sheet vapor retarder designed to separate the installed system from the substrate below. Tarkolay as manufactured by FieldTurf USA, Inc. can be used below, on, or above grade substrates that experience elevated moisture conditions. Moisture tolerances shall not exceed 100% RH per ASTM F2170.

1. Physical properties of the vapor retarder shall conform to the following minimums:

Width	…….	6'6" (2 m)
Length	…….	147'7"' (45 m) approx.
Total Thickness	…….	1.3 mm
Dimensional Stability	PASSED	.01% (EN 1434)
Permeance	Excellent	<0.20 (ASTM E96

PART 3 - EXECUTION

3.1 *EXAMINATION*

A. It is the responsibility of the general contractor/construction manager to ensure that project/site conditions are acceptable for the installation of the indoor resilient athletic flooring.
B. Verify that the area in which the indoor resilient athletic surfacing will be installed is dry and weather tight. Verify that permanent heat, light and ventilation is installed and operable.
C. Verify that all other work that could cause damage, dirt and dust or interrupt the normal pace of the indoor resilient athletic flooring installation is completed or suspended.
D. Verify that there is a stable room temperature of at least 65°F.
E. Verify that there are no foreign materials or objects on the subfloor and that the subfloor is clean and ready for installation.
F. Moisture content less than 100 % RH when tested per ASTM F2170. Follow Fieldturf Installation Recommendations.
G. Do not average the results of the tests. Report all field test results in writing to the General Contractor, Architect, and End User prior to installation.
H. Verify that the concrete subfloor surface pH level is within the 7 - 10 range.
I. Document the results indicating the slab is within manufacturer's tolerances for slab deviation.

3.2 *PREPARATION OF SURFACES*

A. Sand the entire surface of the concrete slab.
B. Sweep the concrete slab so as to remove all dirt and dust. If a sweeping compound is to be used it must be a sweeping compound that does not contain oil or other items that may inhibit the adhesive bond.

C. Slab must be dust free. In the event that dust impairs adhesive bond, priming the slab prior to application of adhesive may be necessary. Follow installation guidelines.

3.3 *INSTALLATION*

A. The installation area shall be closed to all traffic and activity for a period to be set by the indoor resilient athletic surfacing installer. The indoor resilient athletic surfacing installation shall not begin until the installer is familiar with the existing conditions.
B. All necessary precautions should be taken to minimize noise, smell, dust, the use of hazardous materials, and any other items that may inconvenience others.
C. Install the indoor resilient athletic surfacing in strict accordance with the indoor resilient athletic surfacing manufacturer's written instructions.
D. Paint game lines using approved game line paint primer and game line paint in strict accordance with the game line paint manufacturer's instructions.
E. Install appropriate threshold plates or transition strips where necessary.
F. Use only approved adhesive as recommended by the manufacturer.

3.4 *CLEANING*

A. Remove all unused materials, tools, and equipment and dispose of any debris properly. Clean the indoor resilient athletic surfacing in accordance with the manufacturer's instructions.

3.5 *PROTECTION*

If required, protect the indoor resilient athletic surfacing from damage using coverings approved by the manufacturer until acceptance of work by the customer or their authorized representative.

3.6 RELATED STANDARDS AND GUIDELINES

A. ASTM F2170 "Standard Test Method for Determining Relative Humidity In Concrete Floor Slabs Using In-Situ Probes"
B. ASTM F710 "Standard Practice for Preparing Concrete Floors to Receive Resilient Flooring"
C. ACI 302.2R-06 "Guideline for Concrete Slabs that Receive Moisture-Sensitive Flooring Materials"

END OF SECTION

PolyTurf Plus
13+4 Pad and Pour

PolyTurf Plus Pad and Pour 13+4 is a seamless polyurethane sports surface that is designed for durability and spike resistance. This field-constructed system includes a 4 mm layer of polyurethane with a 7 mm recycled rubber base mat and a 6 mm foam pad underneath for comfort and shock absorption.

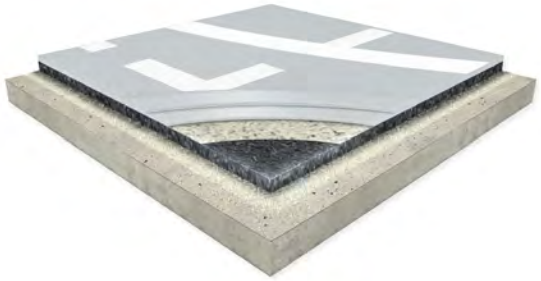

Warranty Protection

- 30-year comprehensive product coverage plus 10-year moisture tolerance coverage. Refer to sample warranty document for complete coverage details.

Environmental Facts and LEED

- For environmental facts and LEED credits, visit: tarkettsportsindoor.com/en/specs-and-data/environmental-fact-sheets and tarkettsportsindoor.com/en/specs-and-data/leed-information.

Maintenance Instructions

- For maintenance instructions, please refer to the PolyTurf Plus Pad and Pour maintenance guide at the following link: tarkettsportsindoor.com/en/specs-and-data/care-and-maintenance.

Installation Methods

- Multi-Poxy Adhesive: installation using Tarkett's solvent-free Multi-Poxy adhesive, which allows moisture tolerance of up to 98% relative humidity per ASTM F2170.
- Beybond 50 Adhesive: installation using Beybond 50 two-part polyurethane adhesive, which allows moisture tolerance of up to 92% relative humidity per ASTM F2170.
- Tarkolay with Multi-Poxy: installation over Tarkolay moisture barrier using Tarkett's solvent-free Multi-Poxy adhesive, which allows moisture tolerance of up to 100% relative humidity per ASTM F2170.

Sports Characteristics

Property	Standard	Value
Surface Finish Effect	ASTM F2772-11	Passed
Force Reduction	ASTM F3189	45.1 %

Technical Characteristics

Property	Standard	Value
Reaction to Fire	ASTM E648	Class 1 (Radiant Panel)
Shore Hardness	—	80 (Shore A)
Tensile Strength	ASTM D412	3200 psi
Elongation	ASTM D412	340 %
Tear Strength	ASTM D624	360 PLI
Thickness	—	17.0 mm (0.669") (4 mm Polyurethane + 7 mm Rubber Base Mat + 6 mm Foam Pad)

Compatible substrates include: properly constructed and prepared concrete, wood, asphalt, and cementitious underlayments. Refer to current installation guidelines, ASTM F710, ACI 302.2R, and other industry standard recommendations for more information. Tarkett Sports reserves the right to modify these specifications without affecting their compliance with standards. Some results may vary in relation to certain flexibilities found within specified testing procedures and manufacturing tolerances.

888.364.6541
tarkettsportsindoor.com

Available Colors for PolyTurf Plus Pad and Pour 13+4

Beige_1200-0133

Black_1200-0091

Blue Blood_1200-0184

Blue Chip_1200-0063

Blue Jay_1200-0125

Blue_1200-0161

Boyden Green_1200-0169

Bright Orange_1200-0065

Bright Red_1200-0044

Butterfield Yellow_1200-0177

Chapel Hill Blue_1200-0073

Classic Tan_1200-0089

Dark Navy Blue_1200-0081

Deep Blue_1200-0111

Desert_1200-0015

Dolphin Grey_1200-0004

Gallant Gold_1200-0123

Garden Cucumber_1200-0155

Garden Green_1200-0062

Gauntlet Grey_1200-0154

Gold_1200-0043

Grass Green_1200-0093

Green_1200-0113

Grey Cloud_1200-0085

Grey Screen_1200-0184

The colors presented here are representations only.
For information on obtaining individual color swatches, contact a local Tarkett Sports representative or call 888-364-6541.

Grey Smoke_1200-0077

Grey_1200-0060

Light Grey_1200-0083

Mid Grey_1200-0180

Midnight Blue_1200-0181

Morning Fog_1200-0066

Ocean Blue_1200-0011

Orange_1200-0094

Pink Panther_1200-0186

Pool Blue_1200-0096

Purdue Gold_1200-0162

Purple_1200-0175

Real Red_1200-0084

Red Theatre_1200-0181

Royal Blue_1200-0037

Sage Green_1200-0006

Smoothie_1200-0068

Southern Blue_1200-0168

Storm Grey_1200-0102

Sundried Tomato_1200-0122

Tarkett Blue_1200-0092

Tropical Green_1200-0135

Vibrant Yellow_1200-0149

White_1200-0900

Yellow_1200-0149

The colors presented here are representations only.
For information on obtaining individual color swatches, contact a local Tarkett Sports representative or call 888-364-6541.

Tarkett SPORTS | THE ULTIMATE SURFACE EXPERIENCE

29/09/20

Game Line Colors

Blue	Yellow	Orange	Aviation-Bright Red	White
Green	Black	Grey		

The colors presented here are representations only.
For information on obtaining individual color swatches, contact a local Tarkett Sports representative or call 888-364-6541.

SECTION 09645
ARCHITECTURAL SPECIFICATIONS FOR INDOOR RESILIENT ATHLETIC SURFACING

PART 1 – GENERAL

1.1 *SECTION INCLUDES*

A. Supply and installation of the indoor resilient multipurpose surfacing
B. Application of the game lines
C. References for the construction and preparation of concrete slabs to receive resilient flooring.

1.2 *SUBMITTALS*

A. Product Data:
Manufacturer's promotional brochures, specifications and installation instructions
B. Samples:
1. Submit for selection and approval three (3) sets of the indoor resilient multipurpose surfacing, manufacturer's brochures, samples or sample boards of all of the available colors, textures and styles.
2. Submit color samples of all the available game line paint colors for selection and approval.
C. Closeout Submittals:
1. Submit three (3) copies of the indoor resilient multipurpose surfacing and manufacturer's maintenance instructions.
2. Submit three (3) copies of the material and installation warranties as specified.

1.3 *QUALITY ASSURANCE*

A. Qualifications:
1. The indoor resilient multipurpose surfacing shall have been actively marketed for a minimum of ten (10) years.
2. The indoor resilient multipurpose surfacing shall be manufactured in an ISO 9001 certified plant.
4. The indoor resilient multipurpose surfacing supplier shall be an established firm, experienced in the field, and appointed as a distributor by the manufacturer of the indoor resilient multipurpose surfacing.
5. The installer of the indoor resilient multipurpose surfacing shall have a minimum of five (5) years of experience in the field installing indoor resilient multipurpose surfacing and have worked on at least five (5) projects of similar size, type and complexity.
B. Certifications:
1. Installer to submit the indoor resilient athletic surfacing manufacturer's certification attesting that they are an approved installer of the indoor resilient multipurpose surfacing.
2. The indoor resilient multipurpose surfacing manufacturer to submit official ISO 9001 certification for the facility in which the indoor resilient multipurpose surfacing is manufactured.

C. Testing:
Tests shall be relative for multi-purpose use with certificates from independent testing resources to be made available upon request. Test results shall be no more than 5 years old and performed according to ASTM standard testing procedures.

B. Certifications:
3. Installer to submit the indoor resilient athletic surfacing manufacturer's or distributor's certification attesting that they are an approved installer of the indoor resilient multipurpose surfacing.

C. Testing:
Tests shall be relative for multi-purpose use with certificates from independent testing resources to be made available upon request. Test results shall be no more than 5 years old and performed according to ASTM F2772 standard testing procedures for force reduction, ball bounce, vertical deformation, and surface finish effect.

1.4 *DELIVERY, STORAGE AND HANDLING*

A. Delivery:
Material shall not be delivered until all related work is in place and finished and/or proper storage facilities and conditions can be provided and guaranteed stable according to Fieldturf' recommendations.

B. Storage:
Store the material in a secure, clean and dry location. Maintain temperature between 55° and 85° Fahrenheit.

1.5 *PROJECT/SITE CONDITIONS*

A. It is the responsibility of the general contractor/construction manager to maintain project/site conditions acceptable for the installation of the indoor resilient multipurpose flooring.

B. The area in which the indoor resilient multipurpose surfacing will be installed shall be dry and weather tight. Permanent heat, light and ventilation shall be installed and operable.

C. All other trades shall have completed their work prior to the installation of the resilient athletic flooring. The general contractor or Construction Manager shall maintain a secure and clean working environment before, during and after the installation. Suspension of other trades' work may be authorized providing their work will not damage the new flooring.

D. Maintain a stable room temperature of at least 65°F for a minimum of one (1) week prior to, during, and thereafter installation.

E. An effective low-permeance vapor barrier is placed directly beneath the concrete subfloor. For "on" or "below grade" installations, it is recommended to provide a permanent vapor barrier resistant to long term hydrostatic pressure/moisture exposure. Protrusions should be sealed to prevent moisture migration into the slab. Moisture should not be allowed to

enter the slab after the completed construction.

F. Concrete subfloor surface pH level within the 7 to 10 range dependent upon installation type.
G. Concrete subfloor should be no greater than 1/8" within a 10 ft diameter. This tolerance can be measured in accordance with ASTM E1155. A specified (F_F) of 50 and an (F_L) of 30 should reach this degree of floor flatness and floor level. There is no numerical correlation between F numbers and the deviation from the straight edge, however the above specified numbers should achieve a flat floor with minimal deviation in the slab. Reference ACI 117 and ACI 302.1R. The general contractor should provide a certificate of compliance with the above recommendations.
H. Concrete subfloor must be clean and free of all foreign materials or objects including, but not limited to, curing compounds and sealers.
I. Fill cracks, grooves, voids, depressions, and other minor imperfections with Ardex (or equal) cement-based patching/leveling compounds. Follow the manufacturer's directions. Moveable joints must be treated utilizing specific transitioning joint devices depending upon the architect's recommendations. Follow current ASTM F710 guidelines for the preparation of concrete slabs to receive resilient flooring.
J. Refer to ACI 302.2R "Guidelines for Concrete Slabs that Receive Moisture-Sensitive Flooring Materials" for concrete design and construction.
K. Concrete slab shall be fortified with continual steel reinforcement. Fiber reinforcement alone shall not be considered adequate fortification.

1.6 *WARRANTY*

A. Materials:
The indoor resilient athletic surfacing shall be covered by the manufacturer against product defects for 30 years and moisture warranty for 10 years. The manufacturer of the indoor resilient multipurpose surfacing must provide this warranty upon request.
B. Installation:
The installation of the indoor resilient multipurpose surfacing shall be covered against poor workmanship and faulty installation by a two (2) year written, limited warranty provided by the contractor performing/overseeing the installation.

1.7 *ADDITIONAL MATERIALS*

Furnish to the owner additional materials containing a total of at least 1% of each different color or design of the indoor resilient athletic surfacing used on the project.

1.8 *LEED™ CERTIFICATION*

The indoor resilient athletic surfacing should be able to help this facility to achieve points towards *LEED™* certification.

LEED categories positively affected by the indoor resilient athletic surfacing:

Product Type			PU with Recycled Base Layer
Building Reuse Maintain Interior Nonstructural Elements	MR 1.2	Renovation	1
Construction Waste Management	MR 2	Renovation	2
Recycled Content	MR 4 20% - 2 points	New/Renovation	2
Regional Materials	MR 5 20% - 2 points	New/Renovation	2
Materials and Resources Rapidly Renewable Materials	MR 6	New/Renovation	1
Indoor Environmental Air Quality Low VOC Adhesives/Sealants	IEQ 4.1	New/Renovation	1
Low-emitting Materials Paints and Coatings	IEQ 4.2	New/Renovation	1

PART 2 - PRODUCTS

2.1 *MANUFACTURERS*

The basis of the design for the indoor resilient multipurpose surfacing is Polyturf Plus Pad and Pour as provided by Fieldturf or equal. Product shall be manufactured by an ISO 9001 company.

2.2 *MATERIALS.*

A.) Flooring System:

Polyturf Plus 4+2 (6mm total thickness) consists of a recycled resilient sheet force reduction layer integrated with seamless, liquid applied, and self-leveling 2 mm polyurethane topcoat.

A durable protective color coat shall be applied to a thickness of approximately 7 mils. The finished product shall be a seamless surface heterogeneous resilient multipurpose synthetic flooring system. System shall comply with the following criteria. Colors to be selected from manufacturer's standard range.

Properties	Standards	PolyTurf Plus Pad & Pour Base Mat + Wear Coat +Top Coat
Base Mat Properties		
Width		59″
Length		82 lin. ft
Weight		1.2 lb/sq ft
Density	ASTM D297	.67 min (g/cm?)
Tensile Strength	ASTM D412	88 psi (Die Cast C)
Elongation	ASTM D412	48.5% (Die Cast C)
Compression	ASTM F36	@50 psi 87% @100 psi 91% @200 psi 91%
Tear Strength	ASTM D624	30 PPI Die C
Flexibility	ASTM F147	0-1
Compression Set B	ASTM D395	37% (25% deflection 158°F/22hrs)
Compression Set B	ASTM D395	26% (50% deflection 158°F/22hrs)
2mm Wear Coat Properties		
Shore Hardness	Shore A	80
Tensile Strength	ASTM D412	3200psi
Elongation	ASTM D412	340%
Tear Strength	ASTM D624	360PLI
Misc Techical		
Fire Classification	ASTM E648	Class 1
Environmental Certification	GreenGuard	GreenGuard Plus Certified
Sports Characteristics		
Overall Thickness		4+2 (6mm)
Shock Absorption	ASTM F2772	Class 1
Ball Bounce	ASTM F2772	>90%
Vertical Deformation	ASTM F2772	Passed
Surface Finish Effect	ASTM F2772	Passed
Installation with Multi-Poxy	92% Per ASTM F2170	

Game Line Paint:

As approved by the indoor resilient athletic surfacing manufacturer. Colors are to be selected from the manufacturer's standard range.

PART 3 - EXECUTION

3.1 *EXAMINATION*

A. It is the responsibility of the general contractor/construction manager to ensure that project/site conditions are acceptable for the installation of the indoor resilient athletic flooring.

B. Verify that the area in which the indoor resilient athletic surfacing will be installed is dry and weather tight. Verify that permanent heat, light and ventilation is installed and operable.

C. Verify that all other work that could cause damage, dirt and dust or interrupt the normal pace of the indoor resilient athletic flooring installation is completed or suspended.

D. Verify that there is a stable room temperature of at least 65°F.

E. Verify that there are no foreign materials or objects on the subfloor and that the subfloor is clean and ready for installation.

F. Moisture content less than 98 % RH when tested per ASTM F2170. Follow Fieldturf Installation Recommendations.
G. If both tests are performed, use the highest value. Do not average the results of the tests. Report all field test results in writing to the General Contractor, Architect, and End User prior to installation.
H. Verify that the concrete subfloor surface pH level is within the 7 - 10 range.
I. Document the results indicating the slab is within manufacturer's tolerances for slab deviation.

3.2 *PREPARATION OF SURFACES*

A. Sand the entire surface of the concrete slab.
B. Sweep the concrete slab so as to remove all dirt and dust. If a sweeping compound is to be used it must be a sweeping compound that does not contain oil or other items that may inhibit the adhesive bond.
C. Slab must be dust free. In the event that dust impairs adhesive bond, priming the slab prior to application of adhesive may be necessary. Follow installation guidelines.

3.3 *INSTALLATION*

A. The installation area shall be closed to all traffic and activity for a period to be set by the indoor resilient athletic surfacing installer. The indoor resilient athletic surfacing installation shall not begin until the installer is familiar with the existing conditions.
B. All necessary precautions should be taken to minimize noise, smell, dust, the use of hazardous materials, and any other items that may inconvenience others.
C. Install the indoor resilient athletic surfacing in strict accordance with the indoor resilient athletic surfacing manufacturer's written instructions.
D. Paint game lines using approved game line paint primer and game line paint in strict accordance with the game line paint manufacturer's instructions.
E. Install appropriate threshold plates or transition strips where necessary.
F. Use only approved adhesive as recommended by the manufacturer.

3.4 *CLEANING*

A. Remove all unused materials, tools, and equipment and dispose of any debris properly. Clean the indoor resilient athletic surfacing in accordance with the manufacturer's instructions.

3.5 *PROTECTION*

If required, protect the indoor resilient athletic surfacing from damage using coverings approved by the manufacturer until acceptance of work by the customer or their authorized representative.

3.6 RELATED STANDARDS AND GUIDELINES

A. ASTM F2170 "Standard Test Method for Determining Relative Humidity In Concrete Floor Slabs Using In-Situ Probes"
B. ASTM F710 "Standard Practice for Preparing Concrete Floors to Receive

Resilient Flooring"

C. ACI 302.2R-06 "Guideline for Concrete Slabs that Receive Moisture-Sensitive Flooring Materials"

END OF SECTION

PART 1 – GENERAL

1.1 *SECTION INCLUDES*

A. Supply and installation of the indoor resilient multipurpose surfacing
B. Application of the game lines
C. References for the construction and preparation of concrete slabs to receive resilient flooring.

1.2 *SUBMITTALS*

A. Product Data:
Manufacturer's promotional brochures, specifications and installation instructions
B. Samples:
1. Submit for selection and approval three (3) sets of the indoor resilient multipurpose surfacing, manufacturer's brochures, samples or sample boards of all of the available colors, textures and styles.
2. Submit color samples of all the available game line paint colors for selection and approval.
C. Closeout Submittals:
1. Submit three (3) copies of the indoor resilient multipurpose surfacing and manufacturer's maintenance instructions.
2. Submit three (3) copies of the material and installation warranties as specified.

1.3 *QUALITY ASSURANCE*

A. Qualifications:
1. The indoor resilient multipurpose surfacing shall have been actively marketed for a minimum of ten (10) years.
2. The indoor resilient multipurpose surfacing shall be manufactured in an ISO 9001 certified plant.
4. The indoor resilient multipurpose surfacing supplier shall be an established firm, experienced in the field, and appointed as a distributor by the manufacturer of the indoor resilient multipurpose surfacing.
5. The installer of the indoor resilient multipurpose surfacing shall have a minimum of five (5) years of experience in the field installing indoor resilient multipurpose surfacing and have worked on at least five (5) projects of similar size, type and complexity.
B. Certifications:
1. Installer to submit the indoor resilient athletic surfacing manufacturer's certification attesting that they are an approved installer of the indoor resilient multipurpose surfacing.
2. The indoor resilient multipurpose surfacing manufacturer to submit official ISO 9001 certification for the facility in which the indoor resilient multipurpose surfacing is manufactured.

C. Testing:
Tests shall be relative for multi-purpose use with certificates from independent testing resources to be made available upon request. Test

results shall be no more than 5 years old and performed according to ASTM standard testing procedures.

B. Certifications:
   3. Installer to submit the indoor resilient athletic surfacing manufacturer's or distributor's certification attesting that they are an approved installer of the indoor resilient multipurpose surfacing.

C. Testing:
   Tests shall be relative for multi-purpose use with certificates from independent testing resources to be made available upon request. Test results shall be no more than 5 years old and performed according to ASTM F2772 standard testing procedures for force reduction, ball bounce, vertical deformation, and surface finish effect.

1.4 *DELIVERY, STORAGE AND HANDLING*

A. Delivery:
   Material shall not be delivered until all related work is in place and finished and/or proper storage facilities and conditions can be provided and guaranteed stable according to Fieldturf' recommendations.
B. Storage:
   Store the material in a secure, clean and dry location. Maintain temperature between 55° and 85° Fahrenheit.

1.5 *PROJECT/SITE CONDITIONS*

A. It is the responsibility of the general contractor/construction manager to maintain project/site conditions acceptable for the installation of the indoor resilient multipurpose flooring.
B. The area in which the indoor resilient multipurpose surfacing will be installed shall be dry and weather tight. Permanent heat, light and ventilation shall be installed and operable.
C. All other trades shall have completed their work prior to the installation of the resilient athletic flooring. The general contractor or Construction Manager shall maintain a secure and clean working environment before, during and after the installation. Suspension of other trades' work may be authorized providing their work will not damage the new flooring.
D. Maintain a stable room temperature of at least 65°F for a minimum of one (1) week prior to, during, and thereafter installation.
E. An effective low-permeance vapor barrier is placed directly beneath the concrete subfloor. For "on" or "below grade" installations, it is recommended to provide a permanent vapor barrier resistant to long term hydrostatic pressure/moisture exposure. Protrusions should be sealed to prevent moisture migration into the slab. Moisture should not be allowed to enter the slab after the completed construction.
F. Concrete subfloor surface pH level within the 7 to 10 range dependent upon installation type.
G. Concrete subfloor should be no greater than 1/8" within a 10 ft diameter. This tolerance can be measured in accordance with ASTM E1155.
   A specified (F_F) of 50 and an (F_L) of 30 should reach this degree of floor

flatness and floor level. There is no numerical correlation between F numbers and the deviation from the straight edge, however the above specified numbers should achieve a flat floor with minimal deviation in the slab. Reference ACI 117 and ACI 302.1R. The general contractor should provide a certificate of compliance with the above recommendations.

H. Concrete subfloor must be clean and free of all foreign materials or objects including, but not limited to, curing compounds and sealers.

I. Fill cracks, grooves, voids, depressions, and other minor imperfections with Ardex (or equal) cement-based patching/leveling compounds. Follow the manufacturer's directions. Moveable joints must be treated utilizing specific transitioning joint devices depending upon the architect's recommendations. Follow current ASTM F710 guidelines for the preparation of concrete slabs to receive resilient flooring.

J. Refer to ACI 302.2R "Guidelines for Concrete Slabs that Receive Moisture-Sensitive Flooring Materials" for concrete design and construction.

K. Concrete slab shall be fortified with continual steel reinforcement. Fiber reinforcement alone shall not be considered adequate fortification.

1.6 *WARRANTY*

A. Materials:
The indoor resilient athletic surfacing shall be covered by the manufacturer against product defects for 30 years and moisture warranty for 10 years. The manufacturer of the indoor resilient multipurpose surfacing must provide this warranty upon request.

B. Installation:
The installation of the indoor resilient multipurpose surfacing shall be covered against poor workmanship and faulty installation by a two (2) year written, limited warranty provided by the contractor performing/overseeing the installation.

1.7 *ADDITIONAL MATERIALS*

Furnish to the owner additional materials containing a total of at least 1% of each different color or design of the indoor resilient athletic surfacing used on the project.

1.8 *LEED™ CERTIFICATION*

The indoor resilient athletic surfacing should be able to help this facility to achieve points towards *LEED™* certification.

LEED categories positively affected by the indoor resilient athletic surfacing:

Product Type			PU with Recycled Base Layer
Building Reuse Maintain Interior Nonstructural Elements	**MR 1.2**	Renovation	1
Construction Waste Management	**MR 2**	Renovation	2
Recycled Content	**MR 4** **20% - 2 points**	New/Renovation	2
Regional Materials	**MR 5** **20% - 2 points**	New/Renovation	2

Materials and Resources Rapidly Renewable Materials	**MR 6**	New/Renovation	1
Indoor Environmental Air Quality Low VOC Adhesives/Sealants	**IEQ 4.1**	New/Renovation	1
Low-emitting Materials Paints and Coatings	**IEQ 4.2**	New/Renovation	1

PART 2 - PRODUCTS

2.1 *MANUFACTURERS*

The basis of the design for the indoor resilient multipurpose surfacing is Polyturf Plus Pad and Pour as provided by Fieldturf or equal. Product shall be manufactured by an ISO 9001 company.

2.2 *MATERIALS.*

A.) Flooring System:

Polyturf Plus 4+2 (6 mm total thickness) consists of a recycled resilient sheet force reduction layer integrated with seamless, liquid applied, and self-leveling 2 mm polyurethane topcoat.

A durable protective color coat shall be applied to a thickness of approximately 7 mils. The finished product shall be a seamless surface heterogeneous resilient multipurpose synthetic flooring system. System shall comply with the following criteria. Colors to be selected from manufacturer's standard range.

Properties	Standards	PolyTurf Plus Pad & Pour Base Mat + Wear Coat +Top Coat
Base Mat Properties		
Width		59"
Length		82 lin. ft
Weight		1.2 lb/sq ft
Density	ASTM D297	.67 min (g/cm?)
Tensile Strength	ASTM D412	88 psi (Die Cast C)
Elongation	ASTM D412	48.5% (Die Cast C)
Compression	ASTM F36	@50 psi 87% @100 psi 91% @200 psi 91%
Tear Strength	ASTM D624	30 PPI Die C
Flexibility	ASTM F147	0-1
Compression Set B	ASTM D395	37% (25% deflection 158°F/22hrs)
Compression Set B	ASTM D395	26% (50% deflection 158°F/22hrs)
2mm Wear Coat Properties		
Shore Hardness	Shore A	80
Tensile Strength	ASTM D412	3200 psi
Elongation	ASTM D412	340%
Tear Strength	ASTM D624	360 PLI
Misc Technical		
Fire Classification	ASTM E648	Class 1
Environmental Certification	GreenGuard	GreenGuard Plus Certified
Sports Characteristics		
Overall Thickness		4+2 (6 mm)
Shock Absorption	ASTM F2772	Class 1
Ball Bounce	ASTM F2772	>90%
Vertical Deformation	ASTM F2772	Passed
Surface Finish Effect	ASTM F2772	Passed
Installation with Multi-Poxy	92% Per ASTM F2170	

1. Game Line Paint: As approved by the indoor resilient athletic surfacing manufacturer. Colors are to be selected from the manufacturer's standard range.

B. Tarkolay – A high quality low permeance slip sheet vapor retarder designed to separate the installed system from the substrate below. Tarkolay as manufactured by FieldTurf USA, Inc. can be used below, on, or above grade substrates that experience elevated moisture conditions. Moisture tolerances shall not exceed 100% RH per ASTM F2170.

1. Physical properties of the vapor retarder shall conform to the following minimums:

Width	…….	6'6" (2 m)
Length	…….	147'7"' (45 m) approx.
Total Thickness	…….	1.3 mm
Dimensional Stability	PASSED	.01% (EN 1434)
Permeance	Excellent	<0.20 (ASTM E96

PART 3 - EXECUTION

3.1 *EXAMINATION*

A. It is the responsibility of the general contractor/construction manager to ensure that project/site conditions are acceptable for the installation of the indoor resilient athletic flooring.
B. Verify that the area in which the indoor resilient athletic surfacing will be installed is dry and weather tight. Verify that permanent heat, light and ventilation is installed and operable.
C. Verify that all other work that could cause damage, dirt and dust or interrupt the normal pace of the indoor resilient athletic flooring installation is completed or suspended.
D. Verify that there is a stable room temperature of at least 65°F.
E. Verify that there are no foreign materials or objects on the subfloor and that the subfloor is clean and ready for installation.
F. Moisture content less than 98 % RH when tested per ASTM F2170. Follow Fieldturf Installation Recommendations.
G. Do not average the results of the tests. Report all field test results in writing to the General Contractor, Architect, and End User prior to installation.
H. Verify that the concrete subfloor surface pH level is within the 7 - 10 range.
I. Document the results indicating the slab is within manufacturer's tolerances for slab deviation.

3.2 *PREPARATION OF SURFACES*

A. Sand the entire surface of the concrete slab.
B. Sweep the concrete slab so as to remove all dirt and dust. If a sweeping compound is to be used it must be a sweeping compound that does not contain oil or other items that may inhibit the adhesive bond.
C. Slab must be dust free. In the event that dust impairs adhesive bond, priming the slab prior to application of adhesive may be necessary. Follow installation guidelines.

3.3 *INSTALLATION*

A. The installation area shall be closed to all traffic and activity for a period to be set by the indoor resilient athletic surfacing installer. The indoor resilient athletic surfacing installation shall not begin until the installer is familiar with the existing conditions.
B. All necessary precautions should be taken to minimize noise, smell, dust, the use of hazardous materials, and any other items that may inconvenience others.
C. Install the indoor resilient athletic surfacing in strict accordance with the indoor resilient athletic surfacing manufacturer's written instructions.
D. Paint game lines using approved game line paint primer and game line paint in strict accordance with the game line paint manufacturer's instructions.
E. Install appropriate threshold plates or transition strips where necessary.
F. Use only approved adhesive as recommended by the manufacturer.

3.4 *CLEANING*

A. Remove all unused materials, tools, and equipment and dispose of any debris properly. Clean the indoor resilient athletic surfacing in accordance with the manufacturer's instructions.

3.5 *PROTECTION*

If required, protect the indoor resilient athletic surfacing from damage using coverings approved by the manufacturer until acceptance of work by the customer or their authorized representative.

3.6 RELATED STANDARDS AND GUIDELINES

A. ASTM F2170 "Standard Test Method for Determining Relative Humidity In Concrete Floor Slabs Using In-Situ Probes"
B. ASTM F710 "Standard Practice for Preparing Concrete Floors to Receive Resilient Flooring"
C. ACI 302.2R-06 "Guideline for Concrete Slabs that Receive Moisture-Sensitive Flooring Materials"

END OF SECTION

SECTION 09645
ARCHITECTURAL SPECIFICATIONS FOR INDOOR RESILIENT ATHLETIC SURFACING

PART 1 – GENERAL

1.1 *SECTION INCLUDES*

A. Supply and installation of the indoor resilient multipurpose surfacing
B. Application of the game lines
C. References for the construction and preparation of concrete slabs to receive resilient flooring.

1.2 *SUBMITTALS*

A. Product Data:
Manufacturer's promotional brochures, specifications and installation instructions
B. Samples:
1. Submit for selection and approval three (3) sets of the indoor resilient multipurpose surfacing, manufacturer's brochures, samples or sample boards of all of the available colors, textures and styles.
2. Submit color samples of all the available game line paint colors for selection and approval.
C. Closeout Submittals:
1. Submit three (3) copies of the indoor resilient multipurpose surfacing and manufacturer's maintenance instructions.
2. Submit three (3) copies of the material and installation warranties as specified.

1.3 *QUALITY ASSURANCE*

A. Qualifications:
1. The indoor resilient multipurpose surfacing shall have been actively marketed for a minimum of ten (10) years.
2. The indoor resilient multipurpose surfacing shall be manufactured in an ISO 9001 certified plant.
4. The indoor resilient multipurpose surfacing supplier shall be an established firm, experienced in the field, and appointed as a distributor by the manufacturer of the indoor resilient multipurpose surfacing.
5. The installer of the indoor resilient multipurpose surfacing shall have a minimum of five (5) years of experience in the field installing indoor resilient multipurpose surfacing and have worked on at least five (5) projects of similar size, type and complexity.
B. Certifications:
1. Installer to submit the indoor resilient athletic surfacing manufacturer's certification attesting that they are an approved installer of the indoor resilient multipurpose surfacing.
2. The indoor resilient multipurpose surfacing manufacturer to submit official ISO 9001 certification for the facility in which the indoor resilient multipurpose surfacing is manufactured.

C. Testing:
Tests shall be relative for multi-purpose use with certificates from independent testing resources to be made available upon request. Test results shall be no more than 5 years old and performed according to ASTM standard testing procedures.

B. Certifications:
3. Installer to submit the indoor resilient athletic surfacing manufacturer's or distributor's certification attesting that they are an approved installer of the indoor resilient multipurpose surfacing.

C. Testing:
Tests shall be relative for multi-purpose use with certificates from independent testing resources to be made available upon request. Test results shall be no more than 5 years old and performed according to ASTM F2772 standard testing procedures for force reduction, ball bounce, vertical deformation, and surface finish effect.

1.4 *DELIVERY, STORAGE AND HANDLING*

A. Delivery:
Material shall not be delivered until all related work is in place and finished and/or proper storage facilities and conditions can be provided and guaranteed stable according to Fieldturf' recommendations.

B. Storage:
Store the material in a secure, clean and dry location. Maintain temperature between 55° and 85° Fahrenheit.

1.5 *PROJECT/SITE CONDITIONS*

A. It is the responsibility of the general contractor/construction manager to maintain project/site conditions acceptable for the installation of the indoor resilient multipurpose flooring.

B. The area in which the indoor resilient multipurpose surfacing will be installed shall be dry and weather tight. Permanent heat, light and ventilation shall be installed and operable.

C. All other trades shall have completed their work prior to the installation of the resilient athletic flooring. The general contractor or Construction Manager shall maintain a secure and clean working environment before, during and after the installation. Suspension of other trades' work may be authorized providing their work will not damage the new flooring.

D. Maintain a stable room temperature of at least 65°F for a minimum of one (1) week prior to, during, and thereafter installation.

E. An effective low-permeance vapor barrier is placed directly beneath the concrete subfloor. For "on" or "below grade" installations, it is recommended to provide a permanent vapor barrier resistant to long term hydrostatic pressure/moisture exposure. Protrusions should be sealed to prevent moisture migration into the slab. Moisture should not be allowed to

enter the slab after the completed construction.

F. Concrete subfloor surface pH level within the 7 to 10 range dependent upon installation type.
G. Concrete subfloor should be no greater than 1/8" within a 10 ft diameter. This tolerance can be measured in accordance with ASTM E1155. A specified (F_F) of 50 and an (F_L) of 30 should reach this degree of floor flatness and floor level. There is no numerical correlation between F numbers and the deviation from the straight edge, however the above specified numbers should achieve a flat floor with minimal deviation in the slab. Reference ACI 117 and ACI 302.1R. The general contractor should provide a certificate of compliance with the above recommendations.
H. Concrete subfloor must be clean and free of all foreign materials or objects including, but not limited to, curing compounds and sealers.
I. Fill cracks, grooves, voids, depressions, and other minor imperfections with Ardex (or equal) cement-based patching/leveling compounds. Follow the manufacturer's directions. Moveable joints must be treated utilizing specific transitioning joint devices depending upon the architect's recommendations. Follow current ASTM F710 guidelines for the preparation of concrete slabs to receive resilient flooring.
J. Refer to ACI 302.2R "Guidelines for Concrete Slabs that Receive Moisture-Sensitive Flooring Materials" for concrete design and construction.
K. Concrete slab shall be fortified with continual steel reinforcement. Fiber reinforcement alone shall not be considered adequate fortification.

1.6 *WARRANTY*

A. Materials:
The indoor resilient athletic surfacing shall be covered by the manufacturer against product defects for 30 years and moisture warranty for 10 years. The manufacturer of the indoor resilient multipurpose surfacing must provide this warranty upon request.
B. Installation:
The installation of the indoor resilient multipurpose surfacing shall be covered against poor workmanship and faulty installation by a two (2) year written, limited warranty provided by the contractor performing/overseeing the installation.

1.7 *ADDITIONAL MATERIALS*

Furnish to the owner additional materials containing a total of at least 1% of each different color or design of the indoor resilient athletic surfacing used on the project.

1.8 *LEED™ CERTIFICATION*

The indoor resilient athletic surfacing should be able to help this facility to achieve points towards *LEED™* certification.

LEED categories positively affected by the indoor resilient athletic surfacing:

Product Type			PU with Recycled Base Layer
Building Reuse Maintain Interior Nonstructural Elements	MR 1.2	Renovation	1
Construction Waste Management	MR 2	Renovation	2
Recycled Content	MR 4 20% - 2 points	New/Renovation	2
Regional Materials	MR 5 20% - 2 points	New/Renovation	2
Materials and Resources Rapidly Renewable Materials	MR 6	New/Renovation	1
Indoor Environmental Air Quality Low VOC Adhesives/Sealants	IEQ 4.1	New/Renovation	1
Low-emitting Materials Paints and Coatings	IEQ 4.2	New/Renovation	1

PART 2 - PRODUCTS

2.1 *MANUFACTURERS*

The basis of the design for the indoor resilient multipurpose surfacing is Polyturf Plus Pad and Pour as provided by Fieldturf or equal. Product shall be manufactured by an ISO 9001 company.

2.2 *MATERIALS.*

A.) Flooring System:

Polyturf Plus 7+2 (9mm total thickness) consists of a recycled resilient sheet force reduction layer integrated with seamless, liquid applied, and self-leveling 2 mm polyurethane topcoat.

A durable protective color coat shall be applied to a thickness of approximately 7 mils. The finished product shall be a seamless surface heterogeneous resilient multipurpose synthetic flooring system. System shall comply with the following criteria. Colors to be selected from manufacturer's standard range.

Properties	Standards	PolyTurf Plus Pad & Pour Base Mat + Wear Coat +Top Coat
Base Mat Properties		
Width		59″
Length		82 lin. ft
Weight		1.2 lb/sq ft
Density	ASTM D297	.67 min (g/cm?)
Tensile Strength	ASTM D412	88 psi (Die Cast C)
Elongation	ASTM D412	48.5% (Die Cast C)
Compression	ASTM F36	@50 psi 87% @100 psi 91% @200 psi 91%
Tear Strength	ASTM D624	30 PPI Die C
Flexibility	ASTM F147	0-1
Compression Set B	ASTM D395	37% (25% deflection 158°F/22hrs)
Compression Set B	ASTM D395	26% (50% deflection 158°F/22hrs)
2mm Wear Coat Properties		
Shore Hardness	Shore A	80
Tensile Strength	ASTM D412	3200 psi
Elongation	ASTM D412	340%
Tear Strength	ASTM D624	360 PLI
Misc Techical		
Fire Classification	ASTM E648	Class 1
Environmental Certification	GreenGuard	GreenGuard Plus Certified
Sports Characteristics		
Overall Thickness		7+2 (9mm)
Shock Absorption	ASTM F2772	Class 2
Ball Bounce	ASTM F2772	>90%
Vertical Deformation	ASTM F2772	Passed
Surface Finish Effect	ASTM F2772	Passed
Installation with Multi-Poxy	92% Per ASTM F2170	

.

Game Line Paint:

As approved by the indoor resilient athletic surfacing manufacturer. Colors are to be selected from the manufacturer's standard range.

PART 3 - EXECUTION

3.1 *EXAMINATION*

A. It is the responsibility of the general contractor/construction manager to ensure that project/site conditions are acceptable for the installation of the indoor resilient athletic flooring.

B. Verify that the area in which the indoor resilient athletic surfacing will be installed is dry and weather tight. Verify that permanent heat, light and ventilation is installed and operable.

C. Verify that all other work that could cause damage, dirt and dust or interrupt the normal pace of the indoor resilient athletic flooring installation is completed or suspended.

D. Verify that there is a stable room temperature of at least 65°F.

E. Verify that there are no foreign materials or objects on the subfloor and that the subfloor is clean and ready for installation.

F. Moisture content less than 98 % RH when tested per ASTM F2170. Follow Fieldturf Installation Recommendations.
G. If both tests are performed, use the highest value. Do not average the results of the tests. Report all field test results in writing to the General Contractor, Architect, and End User prior to installation.
H. Verify that the concrete subfloor surface pH level is within the 7 - 10 range.
I. Document the results indicating the slab is within manufacturer's tolerances for slab deviation.

3.2 *PREPARATION OF SURFACES*

A. Sand the entire surface of the concrete slab.
B. Sweep the concrete slab so as to remove all dirt and dust. If a sweeping compound is to be used it must be a sweeping compound that does not contain oil or other items that may inhibit the adhesive bond.
C. Slab must be dust free. In the event that dust impairs adhesive bond, priming the slab prior to application of adhesive may be necessary. Follow installation guidelines.

3.3 *INSTALLATION*

A. The installation area shall be closed to all traffic and activity for a period to be set by the indoor resilient athletic surfacing installer. The indoor resilient athletic surfacing installation shall not begin until the installer is familiar with the existing conditions.
B. All necessary precautions should be taken to minimize noise, smell, dust, the use of hazardous materials, and any other items that may inconvenience others.
C. Install the indoor resilient athletic surfacing in strict accordance with the indoor resilient athletic surfacing manufacturer's written instructions.
D. Paint game lines using approved game line paint primer and game line paint in strict accordance with the game line paint manufacturer's instructions.
E. Install appropriate threshold plates or transition strips where necessary.
F. Use only approved adhesive as recommended by the manufacturer.

3.4 *CLEANING*

A. Remove all unused materials, tools, and equipment and dispose of any debris properly. Clean the indoor resilient athletic surfacing in accordance with the manufacturer's instructions.

3.5 *PROTECTION*

If required, protect the indoor resilient athletic surfacing from damage using coverings approved by the manufacturer until acceptance of work by the customer or their authorized representative.

3.6 RELATED STANDARDS AND GUIDELINES

A. ASTM F2170 "Standard Test Method for Determining Relative Humidity In Concrete Floor Slabs Using In-Situ Probes"
B. ASTM F710 "Standard Practice for Preparing Concrete Floors to Receive

Resilient Flooring"

C. ACI 302.2R-06 "Guideline for Concrete Slabs that Receive Moisture-Sensitive Flooring Materials"

END OF SECTION

PART 1 – GENERAL

1.1 *SECTION INCLUDES*

A. Supply and installation of the indoor resilient multipurpose surfacing
B. Application of the game lines
C. References for the construction and preparation of concrete slabs to receive resilient flooring.

1.2 *SUBMITTALS*

A. Product Data:
Manufacturer's promotional brochures, specifications and installation instructions
B. Samples:
1. Submit for selection and approval three (3) sets of the indoor resilient multipurpose surfacing, manufacturer's brochures, samples or sample boards of all of the available colors, textures and styles.
2. Submit color samples of all the available game line paint colors for selection and approval.
C. Closeout Submittals:
1. Submit three (3) copies of the indoor resilient multipurpose surfacing and manufacturer's maintenance instructions.
2. Submit three (3) copies of the material and installation warranties as specified.

1.3 *QUALITY ASSURANCE*

A. Qualifications:
1. The indoor resilient multipurpose surfacing shall have been actively marketed for a minimum of ten (10) years.
2. The indoor resilient multipurpose surfacing shall be manufactured in an ISO 9001 certified plant.
4. The indoor resilient multipurpose surfacing supplier shall be an established firm, experienced in the field, and appointed as a distributor by the manufacturer of the indoor resilient multipurpose surfacing.
5. The installer of the indoor resilient multipurpose surfacing shall have a minimum of five (5) years of experience in the field installing indoor resilient multipurpose surfacing and have worked on at least five (5) projects of similar size, type and complexity.
B. Certifications:
1. Installer to submit the indoor resilient athletic surfacing manufacturer's certification attesting that they are an approved installer of the indoor resilient multipurpose surfacing.
2. The indoor resilient multipurpose surfacing manufacturer to submit official ISO 9001 certification for the facility in which the indoor resilient multipurpose surfacing is manufactured.

C. Testing:
Tests shall be relative for multi-purpose use with certificates from independent testing resources to be made available upon request. Test

results shall be no more than 5 years old and performed according to ASTM standard testing procedures.

B. Certifications:
   3. Installer to submit the indoor resilient athletic surfacing manufacturer's or distributor's certification attesting that they are an approved installer of the indoor resilient multipurpose surfacing.

C. Testing:
   Tests shall be relative for multi-purpose use with certificates from independent testing resources to be made available upon request. Test results shall be no more than 5 years old and performed according to ASTM F2772 standard testing procedures for force reduction, ball bounce, vertical deformation, and surface finish effect.

1.4 *DELIVERY, STORAGE AND HANDLING*

A. Delivery:
   Material shall not be delivered until all related work is in place and finished and/or proper storage facilities and conditions can be provided and guaranteed stable according to Fieldturf' recommendations.
B. Storage:
   Store the material in a secure, clean and dry location. Maintain temperature between 55° and 85° Fahrenheit.

1.5 *PROJECT/SITE CONDITIONS*

A. It is the responsibility of the general contractor/construction manager to maintain project/site conditions acceptable for the installation of the indoor resilient multipurpose flooring.
B. The area in which the indoor resilient multipurpose surfacing will be installed shall be dry and weather tight. Permanent heat, light and ventilation shall be installed and operable.
C. All other trades shall have completed their work prior to the installation of the resilient athletic flooring. The general contractor or Construction Manager shall maintain a secure and clean working environment before, during and after the installation. Suspension of other trades' work may be authorized providing their work will not damage the new flooring.
D. Maintain a stable room temperature of at least 65°F for a minimum of one (1) week prior to, during, and thereafter installation.
E. An effective low-permeance vapor barrier is placed directly beneath the concrete subfloor. For "on" or "below grade" installations, it is recommended to provide a permanent vapor barrier resistant to long term hydrostatic pressure/moisture exposure. Protrusions should be sealed to prevent moisture migration into the slab. Moisture should not be allowed to enter the slab after the completed construction.
F. Concrete subfloor surface pH level within the 7 to 10 range dependent upon installation type.
G. Concrete subfloor should be no greater than 1/8" within a 10 ft diameter. This tolerance can be measured in accordance with ASTM E1155.
   A specified (F_F) of 50 and an (F_L) of 30 should reach this degree of floor

flatness and floor level. There is no numerical correlation between F numbers and the deviation from the straight edge, however the above specified numbers should achieve a flat floor with minimal deviation in the slab. Reference ACI 117 and ACI 302.1R. The general contractor should provide a certificate of compliance with the above recommendations.

H. Concrete subfloor must be clean and free of all foreign materials or objects including, but not limited to, curing compounds and sealers.

I. Fill cracks, grooves, voids, depressions, and other minor imperfections with Ardex (or equal) cement-based patching/leveling compounds. Follow the manufacturer's directions. Moveable joints must be treated utilizing specific transitioning joint devices depending upon the architect's recommendations. Follow current ASTM F710 guidelines for the preparation of concrete slabs to receive resilient flooring.

J. Refer to ACI 302.2R "Guidelines for Concrete Slabs that Receive Moisture-Sensitive Flooring Materials" for concrete design and construction.

K. Concrete slab shall be fortified with continual steel reinforcement. Fiber reinforcement alone shall not be considered adequate fortification.

1.6 *WARRANTY*

A. Materials:
The indoor resilient athletic surfacing shall be covered by the manufacturer against product defects for 30 years and moisture warranty for 10 years. The manufacturer of the indoor resilient multipurpose surfacing must provide this warranty upon request.

B. Installation:
The installation of the indoor resilient multipurpose surfacing shall be covered against poor workmanship and faulty installation by a two (2) year written, limited warranty provided by the contractor performing/overseeing the installation.

1.7 *ADDITIONAL MATERIALS*

Furnish to the owner additional materials containing a total of at least 1% of each different color or design of the indoor resilient athletic surfacing used on the project.

1.8 *LEED™ CERTIFICATION*

The indoor resilient athletic surfacing should be able to help this facility to achieve points towards *LEED*™ certification.

LEED categories positively affected by the indoor resilient athletic surfacing:

Product Type			PU with Recycled Base Layer
Building Reuse Maintain Interior Nonstructural Elements	**MR 1.2**	Renovation	1
Construction Waste Management	**MR 2**	Renovation	2
Recycled Content	**MR 4** **20% - 2 points**	New/Renovation	2
Regional Materials	**MR 5** **20% - 2 points**	New/Renovation	2

Materials and Resources Rapidly Renewable Materials	**MR 6**	New/Renovation	1
Indoor Environmental Air Quality Low VOC Adhesives/Sealants	**IEQ 4.1**	New/Renovation	1
Low-emitting Materials Paints and Coatings	**IEQ 4.2**	New/Renovation	1

PART 2 - PRODUCTS

2.1 *MANUFACTURERS*

The basis of the design for the indoor resilient multipurpose surfacing is Polyturf Plus Pad and Pour as provided by Fieldturf or equal. Product shall be manufactured by an ISO 9001 company.

2.2 *MATERIALS.*

A.) Flooring System:

Polyturf Plus 7+2 (9 mm total thickness) consists of a recycled resilient sheet force reduction layer integrated with seamless, liquid applied, and self-leveling 2 mm polyurethane topcoat.

A durable protective color coat shall be applied to a thickness of approximately 7 mils. The finished product shall be a seamless surface heterogeneous resilient multipurpose synthetic flooring system. System shall comply with the following criteria. Colors to be selected from manufacturer's standard range.

Properties	Standards	PolyTurf Plus Pad & Pour Base Mat + Wear Coat +Top Coat
Base Mat Properties		
Width		59"
Length		82 lin. ft
Weight		1.2 lb/sq ft
Density	ASTM D297	.67 min (g/cm?)
Tensile Strength	ASTM D412	88 psi (Die Cast C)
Elongation	ASTM D412	48.5% (Die Cast C)
Compression	ASTM F36	@50 psi 87% @100 psi 91% @200 psi 91%
Tear Strength	ASTM D624	30 PPI Die C
Flexibility	ASTM F147	0-1
Compression Set B	ASTM D395	37% (25% deflection 158°F/22hrs)
Compression Set B	ASTM D395	26% (50% deflection 158°F/22hrs)
2mm Wear Coat Properties		
Shore Hardness	Shore A	80
Tensile Strength	ASTM D412	3200 psi
Elongation	ASTM D412	340%
Tear Strength	ASTM D624	360 PLI
Misc Technical		
Fire Classification	ASTM E648	Class 2
Environmental Certification	GreenGuard	GreenGuard Plus Certified
Sports Characteristics		
Overall Thickness		7+2 (9 mm)
Shock Absorption	ASTM F2772	Class 1
Ball Bounce	ASTM F2772	>90%
Vertical Deformation	ASTM F2772	Passed
Surface Finish Effect	ASTM F2772	Passed
Installation with Multi-Poxy	92% Per ASTM F2170	

1. Game Line Paint:
As approved by the indoor resilient athletic surfacing manufacturer. Colors are to be selected from the manufacturer's standard range.

B. Tarkolay – A high quality low permeance slip sheet vapor retarder designed to separate the installed system from the substrate below. Tarkolay as manufactured by FieldTurf USA, Inc. can be used below, on, or above grade substrates that experience elevated moisture conditions. Moisture tolerances shall not exceed 100% RH per ASTM F2170.

1. Physical properties of the vapor retarder shall conform to the following minimums:

Width	…….	6'6" (2 m)
Length	…….	147'7"' (45 m) approx.
Total Thickness	…….	1.3 mm
Dimensional Stability	PASSED	.01% (EN 1434)
Permeance	Excellent	<0.20 (ASTM E96

PART 3 - EXECUTION

3.1 *EXAMINATION*

A. It is the responsibility of the general contractor/construction manager to ensure that project/site conditions are acceptable for the installation of the indoor resilient athletic flooring.
B. Verify that the area in which the indoor resilient athletic surfacing will be installed is dry and weather tight. Verify that permanent heat, light and ventilation is installed and operable.
C. Verify that all other work that could cause damage, dirt and dust or interrupt the normal pace of the indoor resilient athletic flooring installation is completed or suspended.
D. Verify that there is a stable room temperature of at least 65°F.
E. Verify that there are no foreign materials or objects on the subfloor and that the subfloor is clean and ready for installation.
F. Moisture content less than 98 % RH when tested per ASTM F2170. Follow Fieldturf Installation Recommendations.
G. Do not average the results of the tests. Report all field test results in writing to the General Contractor, Architect, and End User prior to installation.
H. Verify that the concrete subfloor surface pH level is within the 7 - 10 range.
I. Document the results indicating the slab is within manufacturer's tolerances for slab deviation.

3.2 *PREPARATION OF SURFACES*

A. Sand the entire surface of the concrete slab.
B. Sweep the concrete slab so as to remove all dirt and dust. If a sweeping compound is to be used it must be a sweeping compound that does not contain oil or other items that may inhibit the adhesive bond.

C. Slab must be dust free. In the event that dust impairs adhesive bond, priming the slab prior to application of adhesive may be necessary. Follow installation guidelines.

3.3 *INSTALLATION*

A. The installation area shall be closed to all traffic and activity for a period to be set by the indoor resilient athletic surfacing installer. The indoor resilient athletic surfacing installation shall not begin until the installer is familiar with the existing conditions.
B. All necessary precautions should be taken to minimize noise, smell, dust, the use of hazardous materials, and any other items that may inconvenience others.
C. Install the indoor resilient athletic surfacing in strict accordance with the indoor resilient athletic surfacing manufacturer's written instructions.
D. Paint game lines using approved game line paint primer and game line paint in strict accordance with the game line paint manufacturer's instructions.
E. Install appropriate threshold plates or transition strips where necessary.
F. Use only approved adhesive as recommended by the manufacturer.

3.4 *CLEANING*

A. Remove all unused materials, tools, and equipment and dispose of any debris properly. Clean the indoor resilient athletic surfacing in accordance with the manufacturer's instructions.

3.5 *PROTECTION*

If required, protect the indoor resilient athletic surfacing from damage using coverings approved by the manufacturer until acceptance of work by the customer or their authorized representative.

3.6 RELATED STANDARDS AND GUIDELINES

A. ASTM F2170 "Standard Test Method for Determining Relative Humidity In Concrete Floor Slabs Using In-Situ Probes"
B. ASTM F710 "Standard Practice for Preparing Concrete Floors to Receive Resilient Flooring"
C. ACI 302.2R-06 "Guideline for Concrete Slabs that Receive Moisture-Sensitive Flooring Materials"

END OF SECTION

SECTION 09645
ARCHITECTURAL SPECIFICATIONS FOR INDOOR RESILIENT ATHLETIC SURFACING

PART 1 – GENERAL

1.1 *SECTION INCLUDES*

A. Supply and installation of the indoor resilient multipurpose surfacing
B. Application of the game lines
C. References for the construction and preparation of concrete slabs to receive resilient flooring.

1.2 *SUBMITTALS*

A. Product Data:
Manufacturer's promotional brochures, specifications and installation instructions
B. Samples:
1. Submit for selection and approval three (3) sets of the indoor resilient multipurpose surfacing, manufacturer's brochures, samples or sample boards of all of the available colors, textures and styles.
2. Submit color samples of all the available game line paint colors for selection and approval.
C. Closeout Submittals:
1. Submit three (3) copies of the indoor resilient multipurpose surfacing and manufacturer's maintenance instructions.
2. Submit three (3) copies of the material and installation warranties as specified.

1.3 *QUALITY ASSURANCE*

A. Qualifications:
1. The indoor resilient multipurpose surfacing shall have been actively marketed for a minimum of ten (10) years.
2. The indoor resilient multipurpose surfacing shall be manufactured in an ISO 9001 certified plant.
4. The indoor resilient multipurpose surfacing supplier shall be an established firm, experienced in the field, and appointed as a distributor by the manufacturer of the indoor resilient multipurpose surfacing.
5. The installer of the indoor resilient multipurpose surfacing shall have a minimum of five (5) years of experience in the field installing indoor resilient multipurpose surfacing and have worked on at least five (5) projects of similar size, type and complexity.
B. Certifications:
1. Installer to submit the indoor resilient athletic surfacing manufacturer's certification attesting that they are an approved installer of the indoor resilient multipurpose surfacing.
2. The indoor resilient multipurpose surfacing manufacturer to submit official ISO 9001 certification for the facility in which the indoor resilient multipurpose surfacing is manufactured.

C. Testing:
Tests shall be relative for multi-purpose use with certificates from independent testing resources to be made available upon request. Test results shall be no more than 5 years old and performed according to ASTM standard testing procedures.

B. Certifications:
3. Installer to submit the indoor resilient athletic surfacing manufacturer's or distributor's certification attesting that they are an approved installer of the indoor resilient multipurpose surfacing.

C. Testing:
Tests shall be relative for multi-purpose use with certificates from independent testing resources to be made available upon request. Test results shall be no more than 5 years old and performed according to ASTM F2772 standard testing procedures for force reduction, ball bounce, vertical deformation, and surface finish effect.

1.4 *DELIVERY, STORAGE AND HANDLING*

A. Delivery:
Material shall not be delivered until all related work is in place and finished and/or proper storage facilities and conditions can be provided and guaranteed stable according to Fieldturf' recommendations.

B. Storage:
Store the material in a secure, clean and dry location. Maintain temperature between 55° and 85° Fahrenheit.

1.5 *PROJECT/SITE CONDITIONS*

A. It is the responsibility of the general contractor/construction manager to maintain project/site conditions acceptable for the installation of the indoor resilient multipurpose flooring.

B. The area in which the indoor resilient multipurpose surfacing will be installed shall be dry and weather tight. Permanent heat, light and ventilation shall be installed and operable.

C. All other trades shall have completed their work prior to the installation of the resilient athletic flooring. The general contractor or Construction Manager shall maintain a secure and clean working environment before, during and after the installation. Suspension of other trades' work may be authorized providing their work will not damage the new flooring.

D. Maintain a stable room temperature of at least 65°F for a minimum of one (1) week prior to, during, and thereafter installation.

E. An effective low-permeance vapor barrier is placed directly beneath the concrete subfloor. For "on" or "below grade" installations, it is recommended to provide a permanent vapor barrier resistant to long term hydrostatic pressure/moisture exposure. Protrusions should be sealed to prevent moisture migration into the slab. Moisture should not be allowed to

enter the slab after the completed construction.

F. Concrete subfloor surface pH level within the 7 to 10 range dependent upon installation type.
G. Concrete subfloor should be no greater than 1/8" within a 10 ft diameter. This tolerance can be measured in accordance with ASTM E1155. A specified (F_F) of 50 and an (F_L) of 30 should reach this degree of floor flatness and floor level. There is no numerical correlation between F numbers and the deviation from the straight edge, however the above specified numbers should achieve a flat floor with minimal deviation in the slab. Reference ACI 117 and ACI 302.1R. The general contractor should provide a certificate of compliance with the above recommendations.
H. Concrete subfloor must be clean and free of all foreign materials or objects including, but not limited to, curing compounds and sealers.
I. Fill cracks, grooves, voids, depressions, and other minor imperfections with Ardex (or equal) cement-based patching/leveling compounds. Follow the manufacturer's directions. Moveable joints must be treated utilizing specific transitioning joint devices depending upon the architect's recommendations. Follow current ASTM F710 guidelines for the preparation of concrete slabs to receive resilient flooring.
J. Refer to ACI 302.2R "Guidelines for Concrete Slabs that Receive Moisture-Sensitive Flooring Materials" for concrete design and construction.
K. Concrete slab shall be fortified with continual steel reinforcement. Fiber reinforcement alone shall not be considered adequate fortification.

1.6 *WARRANTY*

A. Materials:
The indoor resilient athletic surfacing shall be covered by the manufacturer against product defects for 30 years and moisture warranty for 10 years. The manufacturer of the indoor resilient multipurpose surfacing must provide this warranty upon request.
B. Installation:
The installation of the indoor resilient multipurpose surfacing shall be covered against poor workmanship and faulty installation by a two (2) year written, limited warranty provided by the contractor performing/overseeing the installation.

1.7 *ADDITIONAL MATERIALS*

Furnish to the owner additional materials containing a total of at least 1% of each different color or design of the indoor resilient athletic surfacing used on the project.

1.8 *LEED™ CERTIFICATION*

The indoor resilient athletic surfacing should be able to help this facility to achieve points towards *LEED™* certification.

LEED categories positively affected by the indoor resilient athletic surfacing:

Product Type			PU with Recycled Base Layer
Building Reuse Maintain Interior Nonstructural Elements	MR 1.2	Renovation	1
Construction Waste Management	MR 2	Renovation	2
Recycled Content	MR 4 20% - 2 points	New/Renovation	2
Regional Materials	MR 5 20% - 2 points	New/Renovation	2
Materials and Resources Rapidly Renewable Materials	MR 6	New/Renovation	1
Indoor Environmental Air Quality Low VOC Adhesives/Sealants	IEQ 4.1	New/Renovation	1
Low-emitting Materials Paints and Coatings	IEQ 4.2	New/Renovation	1

PART 2 - PRODUCTS

2.1 *MANUFACTURERS*

The basis of the design for the indoor resilient multipurpose surfacing is Polyturf Plus Pad and Pour as provided by Fieldturf or equal. Product shall be manufactured by an ISO 9001 company.

2.2 *MATERIALS.*

A.) Flooring System:

Polyturf Plus 9+2 (11mm total thickness) consists of a recycled resilient sheet force reduction layer integrated with seamless, liquid applied, and self-leveling 2 mm polyurethane topcoat.

A durable protective color coat shall be applied to a thickness of approximately 7 mils. The finished product shall be a seamless surface heterogeneous resilient multipurpose synthetic flooring system. System shall comply with the following criteria. Colors to be selected from manufacturer's standard range.

Properties	Standards	PolyTurf Plus Pad & Pour Base Mat + Wear Coat +Top Coat
Base Mat Properties		
Width		59″
Length		82 lin. ft
Weight		1.2 lb/sq ft
Density	ASTM D297	.67 min (g/cm?)
Tensile Strength	ASTM D412	88 psi (Die Cast C)
Elongation	ASTM D412	48.5% (Die Cast C)
Compression	ASTM F36	@50 psi 87% @100 psi 91% @200 psi 91%
Tear Strength	ASTM D624	30 PPI Die C
Flexibility	ASTM F147	0-1
Compression Set B	ASTM D395	37% (25% deflection 158°F/22hrs)
Compression Set B	ASTM D395	26% (50% deflection 158°F/22hrs)
2mm Wear Coat Properties		
Shore Hardness	Shore A	80
Tensile Strength	ASTM D412	3200 psi
Elongation	ASTM D412	340%
Tear Strength	ASTM D624	360 PLI
Misc Techical		
Fire Classification	ASTM E648	Class 1
Environmental Certification	GreenGuard	GreenGuard Plus Certified
Sports Characteristics		
Overall Thickness		9+2 (11mm)
Shock Absorption	ASTM F2772	Class 2
Ball Bounce	ASTM F2772	>90%
Vertical Deformation	ASTM F2772	Passed
Surface Finish Effect	ASTM F2772	Passed
Installation with Multi-Poxy	92% Per ASTM F2170	

Game Line Paint:

As approved by the indoor resilient athletic surfacing manufacturer. Colors are to be selected from the manufacturer's standard range.

PART 3 - EXECUTION

3.1 *EXAMINATION*

A. It is the responsibility of the general contractor/construction manager to ensure that project/site conditions are acceptable for the installation of the indoor resilient athletic flooring.

B. Verify that the area in which the indoor resilient athletic surfacing will be installed is dry and weather tight. Verify that permanent heat, light and ventilation is installed and operable.

C. Verify that all other work that could cause damage, dirt and dust or interrupt the normal pace of the indoor resilient athletic flooring installation is completed or suspended.

D. Verify that there is a stable room temperature of at least 65°F.

E. Verify that there are no foreign materials or objects on the subfloor and that the subfloor is clean and ready for installation.

F. Moisture content less than 98 % RH when tested per ASTM F2170. Follow Fieldturf Installation Recommendations.
G. If both tests are performed, use the highest value. Do not average the results of the tests. Report all field test results in writing to the General Contractor, Architect, and End User prior to installation.
H. Verify that the concrete subfloor surface pH level is within the 7 - 10 range.
I. Document the results indicating the slab is within manufacturer's tolerances for slab deviation.

3.2 *PREPARATION OF SURFACES*

A. Sand the entire surface of the concrete slab.
B. Sweep the concrete slab so as to remove all dirt and dust. If a sweeping compound is to be used it must be a sweeping compound that does not contain oil or other items that may inhibit the adhesive bond.
C. Slab must be dust free. In the event that dust impairs adhesive bond, priming the slab prior to application of adhesive may be necessary. Follow installation guidelines.

3.3 *INSTALLATION*

A. The installation area shall be closed to all traffic and activity for a period to be set by the indoor resilient athletic surfacing installer. The indoor resilient athletic surfacing installation shall not begin until the installer is familiar with the existing conditions.
B. All necessary precautions should be taken to minimize noise, smell, dust, the use of hazardous materials, and any other items that may inconvenience others.
C. Install the indoor resilient athletic surfacing in strict accordance with the indoor resilient athletic surfacing manufacturer's written instructions.
D. Paint game lines using approved game line paint primer and game line paint in strict accordance with the game line paint manufacturer's instructions.
E. Install appropriate threshold plates or transition strips where necessary.
F. Use only approved adhesive as recommended by the manufacturer.

3.4 *CLEANING*

A. Remove all unused materials, tools, and equipment and dispose of any debris properly. Clean the indoor resilient athletic surfacing in accordance with the manufacturer's instructions.

3.5 *PROTECTION*

If required, protect the indoor resilient athletic surfacing from damage using coverings approved by the manufacturer until acceptance of work by the customer or their authorized representative.

3.6 RELATED STANDARDS AND GUIDELINES

A. ASTM F2170 "Standard Test Method for Determining Relative Humidity In Concrete Floor Slabs Using In-Situ Probes"
B. ASTM F710 "Standard Practice for Preparing Concrete Floors to Receive

Resilient Flooring"

C. ACI 302.2R-06 "Guideline for Concrete Slabs that Receive Moisture-Sensitive Flooring Materials"

END OF SECTION

PART 1 – GENERAL

1.1 *SECTION INCLUDES*

A. Supply and installation of the indoor resilient multipurpose surfacing
B. Application of the game lines
C. References for the construction and preparation of concrete slabs to receive resilient flooring.

1.2 *SUBMITTALS*

A. Product Data:
Manufacturer's promotional brochures, specifications and installation instructions
B. Samples:
1. Submit for selection and approval three (3) sets of the indoor resilient multipurpose surfacing, manufacturer's brochures, samples or sample boards of all of the available colors, textures and styles.
2. Submit color samples of all the available game line paint colors for selection and approval.
C. Closeout Submittals:
1. Submit three (3) copies of the indoor resilient multipurpose surfacing and manufacturer's maintenance instructions.
2. Submit three (3) copies of the material and installation warranties as specified.

1.3 *QUALITY ASSURANCE*

A. Qualifications:
1. The indoor resilient multipurpose surfacing shall have been actively marketed for a minimum of ten (10) years.
2. The indoor resilient multipurpose surfacing shall be manufactured in an ISO 9001 certified plant.
4. The indoor resilient multipurpose surfacing supplier shall be an established firm, experienced in the field, and appointed as a distributor by the manufacturer of the indoor resilient multipurpose surfacing.
5. The installer of the indoor resilient multipurpose surfacing shall have a minimum of five (5) years of experience in the field installing indoor resilient multipurpose surfacing and have worked on at least five (5) projects of similar size, type and complexity.
B. Certifications:
1. Installer to submit the indoor resilient athletic surfacing manufacturer's certification attesting that they are an approved installer of the indoor resilient multipurpose surfacing.
2. The indoor resilient multipurpose surfacing manufacturer to submit official ISO 9001 certification for the facility in which the indoor resilient multipurpose surfacing is manufactured.

C. Testing:
Tests shall be relative for multi-purpose use with certificates from independent testing resources to be made available upon request. Test

results shall be no more than 5 years old and performed according to ASTM standard testing procedures.

B. Certifications:
   3. Installer to submit the indoor resilient athletic surfacing manufacturer's or distributor's certification attesting that they are an approved installer of the indoor resilient multipurpose surfacing.

C. Testing:
   Tests shall be relative for multi-purpose use with certificates from independent testing resources to be made available upon request. Test results shall be no more than 5 years old and performed according to ASTM F2772 standard testing procedures for force reduction, ball bounce, vertical deformation, and surface finish effect.

1.4 *DELIVERY, STORAGE AND HANDLING*

A. Delivery:
   Material shall not be delivered until all related work is in place and finished and/or proper storage facilities and conditions can be provided and guaranteed stable according to Fieldturf' recommendations.
B. Storage:
   Store the material in a secure, clean and dry location. Maintain temperature between 55° and 85° Fahrenheit.

1.5 *PROJECT/SITE CONDITIONS*

A. It is the responsibility of the general contractor/construction manager to maintain project/site conditions acceptable for the installation of the indoor resilient multipurpose flooring.
B. The area in which the indoor resilient multipurpose surfacing will be installed shall be dry and weather tight. Permanent heat, light and ventilation shall be installed and operable.
C. All other trades shall have completed their work prior to the installation of the resilient athletic flooring. The general contractor or Construction Manager shall maintain a secure and clean working environment before, during and after the installation. Suspension of other trades' work may be authorized providing their work will not damage the new flooring.
D. Maintain a stable room temperature of at least 65°F for a minimum of one (1) week prior to, during, and thereafter installation.
E. An effective low-permeance vapor barrier is placed directly beneath the concrete subfloor. For "on" or "below grade" installations, it is recommended to provide a permanent vapor barrier resistant to long term hydrostatic pressure/moisture exposure. Protrusions should be sealed to prevent moisture migration into the slab. Moisture should not be allowed to enter the slab after the completed construction.
F. Concrete subfloor surface pH level within the 7 to 10 range dependent upon installation type.
G. Concrete subfloor should be no greater than 1/8" within a 10 ft diameter. This tolerance can be measured in accordance with ASTM E1155.
   A specified (F_F) of 50 and an (F_L) of 30 should reach this degree of floor

flatness and floor level. There is no numerical correlation between F numbers and the deviation from the straight edge, however the above specified numbers should achieve a flat floor with minimal deviation in the slab. Reference ACI 117 and ACI 302.1R. The general contractor should provide a certificate of compliance with the above recommendations.

H. Concrete subfloor must be clean and free of all foreign materials or objects including, but not limited to, curing compounds and sealers.

I. Fill cracks, grooves, voids, depressions, and other minor imperfections with Ardex (or equal) cement-based patching/leveling compounds. Follow the manufacturer's directions. Moveable joints must be treated utilizing specific transitioning joint devices depending upon the architect's recommendations. Follow current ASTM F710 guidelines for the preparation of concrete slabs to receive resilient flooring.

J. Refer to ACI 302.2R "Guidelines for Concrete Slabs that Receive Moisture-Sensitive Flooring Materials" for concrete design and construction.

K. Concrete slab shall be fortified with continual steel reinforcement. Fiber reinforcement alone shall not be considered adequate fortification.

1.6 *WARRANTY*

A. Materials:
The indoor resilient athletic surfacing shall be covered by the manufacturer against product defects for 30 years and moisture warranty for 10 years. The manufacturer of the indoor resilient multipurpose surfacing must provide this warranty upon request.

B. Installation:
The installation of the indoor resilient multipurpose surfacing shall be covered against poor workmanship and faulty installation by a two (2) year written, limited warranty provided by the contractor performing/overseeing the installation.

1.7 *ADDITIONAL MATERIALS*

Furnish to the owner additional materials containing a total of at least 1% of each different color or design of the indoor resilient athletic surfacing used on the project.

1.8 *LEED™ CERTIFICATION*

The indoor resilient athletic surfacing should be able to help this facility to achieve points towards *LEED*™ certification.

LEED categories positively affected by the indoor resilient athletic surfacing:

Product Type			PU with Recycled Base Layer
Building Reuse Maintain Interior Nonstructural Elements	**MR 1.2**	Renovation	1
Construction Waste Management	**MR 2**	Renovation	2
Recycled Content	**MR 4** **20% - 2 points**	New/Renovation	2
Regional Materials	**MR 5** **20% - 2 points**	New/Renovation	2

Materials and Resources Rapidly Renewable Materials	**MR 6**	New/Renovation	1
Indoor Environmental Air Quality Low VOC Adhesives/Sealants	**IEQ 4.1**	New/Renovation	1
Low-emitting Materials Paints and Coatings	**IEQ 4.2**	New/Renovation	1

PART 2 - PRODUCTS

2.1 *MANUFACTURERS*

The basis of the design for the indoor resilient multipurpose surfacing is Polyturf Plus Pad and Pour as provided by Fieldturf or equal. Product shall be manufactured by an ISO 9001 company.

2.2 *MATERIALS.*

A.) Flooring System:

Polyturf Plus 9+2 (11 mm total thickness) consists of a recycled resilient sheet force reduction layer integrated with seamless, liquid applied, and self-leveling 2 mm polyurethane topcoat.

A durable protective color coat shall be applied to a thickness of approximately 7 mils. The finished product shall be a seamless surface heterogeneous resilient multipurpose synthetic flooring system. System shall comply with the following criteria. Colors to be selected from manufacturer's standard range.

Properties	**Standards**	**PolyTurf Plus Pad & Pour** **Base Mat + Wear Coat +Top Coat**
Base Mat Properties		
Width		59"
Length		82 lin. ft
Weight		1.2 lb/sq ft
Density	ASTM D297	.67 min (g/cm?)
Tensile Strength	ASTM D412	88 psi (Die Cast C)
Elongation	ASTM D412	48.5% (Die Cast C)
Compression	ASTM F36	@50 psi 87% @100 psi 91% @200 psi 91%
Tear Strength	ASTM D624	30 PPI Die C
Flexibility	ASTM F147	0-1
Compression Set B	ASTM D395	37% (25% deflection 158°F/22hrs)
Compression Set B	ASTM D395	26% (50% deflection 158°F/22hrs)
2mm Wear Coat Properties		
Shore Hardness	Shore A	80
Tensile Strength	ASTM D412	3200 psi
Elongation	ASTM D412	340%
Tear Strength	ASTM D624	360 PLI
Misc Technical		
Fire Classification	ASTM E648	Class 2
Environmental Certification	GreenGuard	GreenGuard Plus Certified
Sports Characteristics		
Overall Thickness		9+2 (11 mm)
Shock Absorption	ASTM F2772	Class 2
Ball Bounce	ASTM F2772	>90%
Vertical Deformation	ASTM F2772	Passed
Surface Finish Effect	ASTM F2772	Passed
Installation with Multi-Poxy	92% Per ASTM F2170	

1. Game Line Paint:
As approved by the indoor resilient athletic surfacing manufacturer. Colors are to be selected from the manufacturer's standard range.

B. Tarkolay – A high quality low permeance slip sheet vapor retarder designed to separate the installed system from the substrate below. Tarkolay as manufactured by FieldTurf USA, Inc. can be used below, on, or above grade substrates that experience elevated moisture conditions. Moisture tolerances shall not exceed 100% RH per ASTM F2170.

1. Physical properties of the vapor retarder shall conform to the following minimums:

Width	…….	6'6" (2 m)
Length	…….	147'7"' (45 m) approx.
Total Thickness	…….	1.3 mm
Dimensional Stability	PASSED	.01% (EN 1434)
Permeance	Excellent	<0.20 (ASTM E96

PART 3 - EXECUTION

3.1 *EXAMINATION*

A. It is the responsibility of the general contractor/construction manager to ensure that project/site conditions are acceptable for the installation of the indoor resilient athletic flooring.
B. Verify that the area in which the indoor resilient athletic surfacing will be installed is dry and weather tight. Verify that permanent heat, light and ventilation is installed and operable.
C. Verify that all other work that could cause damage, dirt and dust or interrupt the normal pace of the indoor resilient athletic flooring installation is completed or suspended.
D. Verify that there is a stable room temperature of at least 65°F.
E. Verify that there are no foreign materials or objects on the subfloor and that the subfloor is clean and ready for installation.
F. Moisture content less than 98 % RH when tested per ASTM F2170. Follow Fieldturf Installation Recommendations.
G. Do not average the results of the tests. Report all field test results in writing to the General Contractor, Architect, and End User prior to installation.
H. Verify that the concrete subfloor surface pH level is within the 7 - 10 range.
I. Document the results indicating the slab is within manufacturer's tolerances for slab deviation.

3.2 *PREPARATION OF SURFACES*

A. Sand the entire surface of the concrete slab.
B. Sweep the concrete slab so as to remove all dirt and dust. If a sweeping compound is to be used it must be a sweeping compound that does not contain oil or other items that may inhibit the adhesive bond.

C. Slab must be dust free. In the event that dust impairs adhesive bond, priming the slab prior to application of adhesive may be necessary. Follow installation guidelines.

3.3 *INSTALLATION*

A. The installation area shall be closed to all traffic and activity for a period to be set by the indoor resilient athletic surfacing installer. The indoor resilient athletic surfacing installation shall not begin until the installer is familiar with the existing conditions.
B. All necessary precautions should be taken to minimize noise, smell, dust, the use of hazardous materials, and any other items that may inconvenience others.
C. Install the indoor resilient athletic surfacing in strict accordance with the indoor resilient athletic surfacing manufacturer's written instructions.
D. Paint game lines using approved game line paint primer and game line paint in strict accordance with the game line paint manufacturer's instructions.
E. Install appropriate threshold plates or transition strips where necessary.
F. Use only approved adhesive as recommended by the manufacturer.

3.4 *CLEANING*

A. Remove all unused materials, tools, and equipment and dispose of any debris properly. Clean the indoor resilient athletic surfacing in accordance with the manufacturer's instructions.

3.5 *PROTECTION*

If required, protect the indoor resilient athletic surfacing from damage using coverings approved by the manufacturer until acceptance of work by the customer or their authorized representative.

3.6 RELATED STANDARDS AND GUIDELINES

A. ASTM F2170 "Standard Test Method for Determining Relative Humidity In Concrete Floor Slabs Using In-Situ Probes"
B. ASTM F710 "Standard Practice for Preparing Concrete Floors to Receive Resilient Flooring"
C. ACI 302.2R-06 "Guideline for Concrete Slabs that Receive Moisture-Sensitive Flooring Materials"

END OF SECTION

SECTION 09645
ARCHITECTURAL SPECIFICATIONS FOR INDOOR RESILIENT ATHLETIC SURFACING

PART 1 – GENERAL

1.1 *SECTION INCLUDES*

A. Supply and installation of the indoor resilient multipurpose surfacing
B. Application of the game lines
C. References for the construction and preparation of concrete slabs to receive resilient flooring.

1.2 *SUBMITTALS*

A. Product Data:
Manufacturer's promotional brochures, specifications and installation instructions
B. Samples:
1. Submit for selection and approval three (3) sets of the indoor resilient multipurpose surfacing, manufacturer's brochures, samples or sample boards of all of the available colors, textures and styles.
2. Submit color samples of all the available game line paint colors for selection and approval.
C. Closeout Submittals:
1. Submit three (3) copies of the indoor resilient multipurpose surfacing and manufacturer's maintenance instructions.
2. Submit three (3) copies of the material and installation warranties as specified.

1.3 *QUALITY ASSURANCE*

A. Qualifications:
1. The indoor resilient multipurpose surfacing shall have been actively marketed for a minimum of ten (10) years.
2. The indoor resilient multipurpose surfacing shall be manufactured in an ISO 9001 certified plant.
4. The indoor resilient multipurpose surfacing supplier shall be an established firm, experienced in the field, and appointed as a distributor by the manufacturer of the indoor resilient multipurpose surfacing.
5. The installer of the indoor resilient multipurpose surfacing shall have a minimum of five (5) years of experience in the field installing indoor resilient multipurpose surfacing and have worked on at least five (5) projects of similar size, type and complexity.
B. Certifications:
1. Installer to submit the indoor resilient athletic surfacing manufacturer's certification attesting that they are an approved installer of the indoor resilient multipurpose surfacing.
2. The indoor resilient multipurpose surfacing manufacturer to submit official ISO 9001 certification for the facility in which the indoor resilient multipurpose surfacing is manufactured.

C. Certifications:
   3. Installer to submit the indoor resilient athletic surfacing manufacturer's or distributor's certification attesting that they are an approved installer of the indoor resilient multipurpose surfacing.

1.4 *DELIVERY, STORAGE AND HANDLING*

A. Delivery:
   Material shall not be delivered until all related work is in place and finished and/or proper storage facilities and conditions can be provided and guaranteed stable according to Fieldturf' recommendations.

B. Storage:
   Store the material in a secure, clean and dry location. Maintain temperature between 55° and 85° Fahrenheit.

1.5 *PROJECT/SITE CONDITIONS*

A. The area in which the indoor resilient multipurpose surfacing will be installed shall be dry and weather tight. Permanent heat, light and ventilation shall be installed and operable.

B. All other trades shall have completed their work prior to the installation of the resilient athletic flooring. The general contractor or Construction Manager shall maintain a secure and clean working environment before, during and after the installation. Suspension of other trades' work may be authorized providing their work will not damage the new flooring.

C. Maintain a stable room temperature of at least 65°F for a minimum of one (1) week prior to, during, and thereafter installation.

D. Concrete subfloor should be no greater than 1/8" within a 10 ft diameter.

1.6 *WARRANTY*

A. Materials:
   The indoor resilient athletic surfacing shall be covered by the manufacturer against product defects for 30 years. The manufacturer of the indoor resilient multipurpose surfacing must provide this warranty upon request.

B. Installation:
   The installation of the indoor resilient multipurpose surfacing shall be covered against poor workmanship and faulty installation by a two (2) year written, limited warranty provided by the contractor performing/overseeing the installation.

1.7 *ADDITIONAL MATERIALS*

Furnish to the owner additional materials containing a total of at least 1% of each different color or design of the indoor resilient athletic surfacing used on the project.

PART 2 - PRODUCTS

2.1 *MANUFACTURERS*
The basis of the design for the indoor resilient multipurpose surfacing is Polyturf Plus Restart as provided by Fieldturf or equal. Product shall be manufactured by an ISO 9001 company.

2.2 *MATERIALS.*
A.) Flooring System:
Polyturf Plus 2mm over pour system.

A durable protective color coat shall be applied to a thickness of approximately 7 mils. The finished product shall be a seamless surface heterogeneous resilient multipurpose synthetic flooring system. System shall comply with the following criteria. Colors to be selected from manufacturer's standard range. Colors selected from standard range.

B. Game Line Paint:
As approved by the indoor resilient athletic surfacing manufacturer. Colors are to be selected from the manufacturer's standard range.

PART 3 - EXECUTION

3.1 *EXAMINATION*
A. Verify that the area in which the indoor resilient athletic surfacing will be installed is dry and weather tight. Verify that permanent heat, light and ventilation is installed and operable.
B. Verify that all other work that could cause damage, dirt and dust or interrupt the normal pace of the indoor resilient athletic flooring installation is completed or suspended.
C. Verify that there is a stable room temperature of at least 65°F.
D. Verify that there are no foreign materials or objects on the subfloor and that the subfloor is clean and ready for installation.
E. Ambient relative humidity should range between 40%-65%.

3.2 *PREPARATION OF SURFACES*
A. Sand the entire surface of the existing urethane and vacuum clean.
B. Surface must be dust free and free of contaminants that may impair proper bonding.

3.3 *INSTALLATION*
A. The installation area shall be closed to all traffic and activity for a period to be set by the indoor resilient athletic surfacing installer. The indoor resilient

athletic surfacing installation shall not begin until the installer is familiar with the existing conditions.

B. All necessary precautions should be taken to minimize noise, smell, dust, the use of hazardous materials, and any other items that may inconvenience others.
C. Install the indoor resilient athletic surfacing in strict accordance with the indoor resilient athletic surfacing manufacturer's written instructions.
D. Paint game lines using approved game line paint primer and game line paint in strict accordance with the game line paint manufacturer's instructions.
E. Install appropriate threshold plates or transition strips where necessary.
F. Allow the new installation to cure for a minimum of 14 days prior to placement and operation of bleachers and/or other portable athletic equipment.

3.4 *CLEANING*

A. Remove all unused materials, tools, and equipment and dispose of any debris properly. Clean the indoor resilient athletic surfacing in accordance with the manufacturer's instructions.

3.5 *PROTECTION*

If required, protect the indoor resilient athletic surfacing from damage using coverings approved by the manufacturer until acceptance of work by the customer or their authorized representative.

3.6 RELATED STANDARDS AND GUIDELINES

A. ASTM F710 "Standard Practice for Preparing Concrete Floors to Receive Resilient Flooring"

END OF SECTION

TEST REPORT

DATE: 09-20-2018 **Page 1 of 1** **TEST NUMBER**: 0250479

CLIENT	Tarkett Sports

TEST METHOD CONDUCTED	ASTM D6007 Standard Test Method for Determining Formaldehyde Concentrations in Air from Wood Products Using a Small-Scale Chamber

DESCRIPTION OF TEST SAMPLE	
IDENTIFICATION	Lumaflex
CONSTRUCTION	Birch Composite Plywood
REFERENCE	Invoice FieldTurf USA Inc./Tarkett Sports

GENERAL PRINCIPLE

This test method covers a small scale procedure for measuring formaldehyde emission potential from wood products. The formaldehyde level is determined by collecting air-borne formaldehyde in a small distilled water reservoir within a closed desiccator. The quantity of formaldehyde is determined by a modification of the National Institute for Occupational Safety and Health (NIOSH) 3500 chromotropic acid test procedure. The sample was deconstructed according to CARB II requirements.

Wood products typically evaluated by this test method are made with urea-formaldehyde adhesives and include but are not limited to particleboard, hardwood, plywood and medium-density fiber-board.

TEST RESULTS

	Formaldehyde	Lowest Calibrated Level	Blank Standard
Lumaflex Fit	<0.025 ppm	.025 ppm	<.025 ppm

COMMENTS

This material, as received, would likely meet the requirements set forth under the CARB II program established by the California Air Resource Board.

MAXIMUM ALLOWABLE				
HWPW-VA	**HWPW-CC**	**PB**	**MDF**	**tMDF**
0.05	0.05	0.09	0.11	0.13

APPROVED BY: Gary Asbury

This report is provided for the exclusive use of the client to whom it is addressed. It may be used in its entirety to gain product acceptance from duly constituted authorities. This report applies only to those samples tested and is not necessarily indicative of apparently identical of similar products. This report, or the name of Professional Testing Laboratory Inc. shall not be used under any circumstance in advertising to the general public.

714 Glenwood Place Dalton, GA 30721 Phone: 706-226-3283 Fax: 706-226-6787 email: protest@optilink.us

FieldTurf®
A Tarkett Sports Company

TECHNICAL PRODUCT SPECIFICATION

CLASSIC HD

SLIT-FILM 2.5"

PROPERTY	VALUE	UNITS	METHOD
Product Stock Code	FTHD-1-Indoor		
Pile Yarn Type	UV-resistant polyethylene		n/a
Yarn Structure	Slit-Film		n/a
Yarn Denier	10800	Denier	D1907
Pile Height	2.5	inches	D5823
Pile Weight	33	oz/yd^2	D5848
Primary Backing Weight	8+	oz/yd^2	D5848
Secondary Backing Weight (Perforated)	22	oz/yd^2	D5848
Total Carpet Weight	63	oz/yd^2	D5848
Stitch Gauge	3/4 inch centers		D5793
Tuft Bind	8+	lbs/force	D1335
Grab Tear Length	>200	lbs/force	D5034
Grab Tear Width	>200	lbs/force	D5034
Pill Burn Test	Pass		D2859
Impact Attenuation (Gmax)	<200	gmax	F1936
Water Permeability	>40	inch/hour	F1551; DIN 18-035
Cryogenic SBR Rubber Infill	3	Lbs/ft2	
Sand	6.2	Lbs/ft2	
Total Product Weight	1388	oz/yd^2	

Issue Date: 9/14/2021

Disclaimer: Variation of +/-5% on above listed property values is within normal manufacturing tolerances

FieldTurf®
COMMERCIAL
A Tarkett Sports Company

COMMAND AGILITY

PROPERTY	VALUE	METHOD
Pile Height	1.125”	D5823
Pile Weight	72 OZ/YD2	D5848
Total Weight	100 OZ/YD2	D5848
Gauge	3/16”	D5793
Primary Backing Weight	8+ OZ/YD2	D5848
Pile Yarn Type	UV-Resistant Polyethylene	N/A
Shape	Slit Film	N/A
Primary Yarn Color	Field Green	N/A
Primary Denier	10,000+	D1577
Secondary Yarn Structure	Thatch	N/A
Secondary Yarn Color	Field Green	N/A
Secondary Denier	5000	D1577
Coating Weight	20 OZ/YD2	D5848
Coating Type	Solid	N/A

** Variation of +/- 5% on above listed property values are within normal manufacturing tolerances.*

LEADING WARRANTY

PROUDLY CRAFTED IN THE USA

ENVIRONMENTALLY SUSTAINABLE

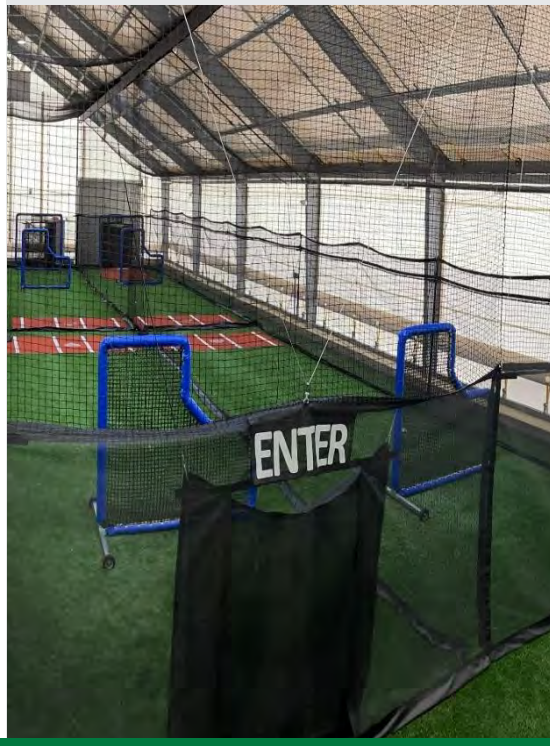

FieldTurf LANDSCAPE
A Tarkett Sports Company

EASY PLAY

EASYTURF® COLLECTION

PROPERTY	VALUE	METHOD
Pile Height	2.00”	D5823
Pile Weight	30 OZ/YD^2	D5848
Total Weight	53 OZ/YD^2	D5848
Gauge	3/4”	D5793
Primary Backing Weight	7+ OZ/YD^2	D5848
Primary Yarn Type	UV-Resistant Polyethylene	N/A
Primary Yarn Structure	Slit Film	N/A
Primary Yarn Color	Field Green	N/A
Primary Yarn Denier	10000+	D1907
Coating Weight	16 OZ/YD^2	D5848
Coating Type	Finger Unit	N/A
Water Permeability	40+ IN/HR	DIN 18-035
Total Infill	2-3 LBS/FT^2 Sand 3 LBS/FT^2 Crumb Rubber	N/A

Variation of +/- 5% on above listed property values are within normal manufacturing tolerances.

- **Unmatched Warranty**
- **Proudly Made in the USA with Global Components**
- **Industry Leading Drainage and Performance**
- **Environmentally Friendly**

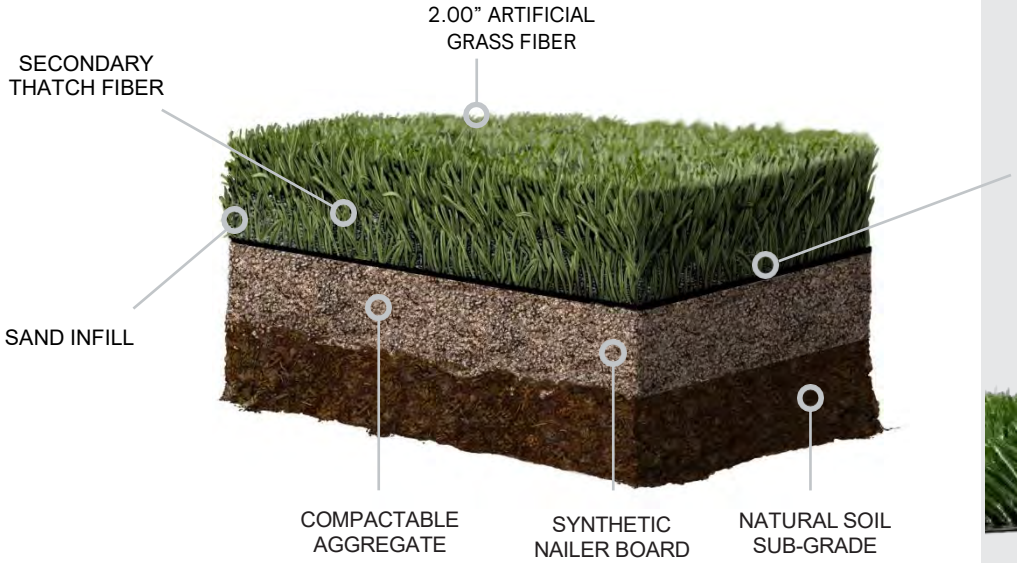

FINGER UNIT

FieldTurf LANDSCAPE
A Tarkett Sports Company

EZ PUTT2

EASYTURF® COLLECTION

PROPERTY	VALUE	METHOD
Pile Height	0.50”	D5823
Pile Weight	36 OZ/YD^2	D5848
Total Weight	63 OZ/YD^2	D5848
Gauge	3/16”	D5793
Primary Backing Weight	7+ OZ/YD^2	D5848
Primary Yarn Type	UV-Resistant Polyethylene	N/A
Primary Yarn Structure	Texturized Monofilament	N/A
Primary Yarn Color	Golf Green	N/A
Primary Yarn Denier	5000	D1907
Coating Weight	20 OZ/YD^2	D5848
Coating Type	Solid	N/A
Water Permeability	N/A	DIN 18-035
Total Infill	1-2 LBS/FT^2	N/A

Variation of +/- 5% on above listed property values are within normal manufacturing tolerances.

- Unmatched Warranty
- Proudly Made in the USA with Global Components
- Industry Leading Drainage and Performance
- Environmentally Friendly

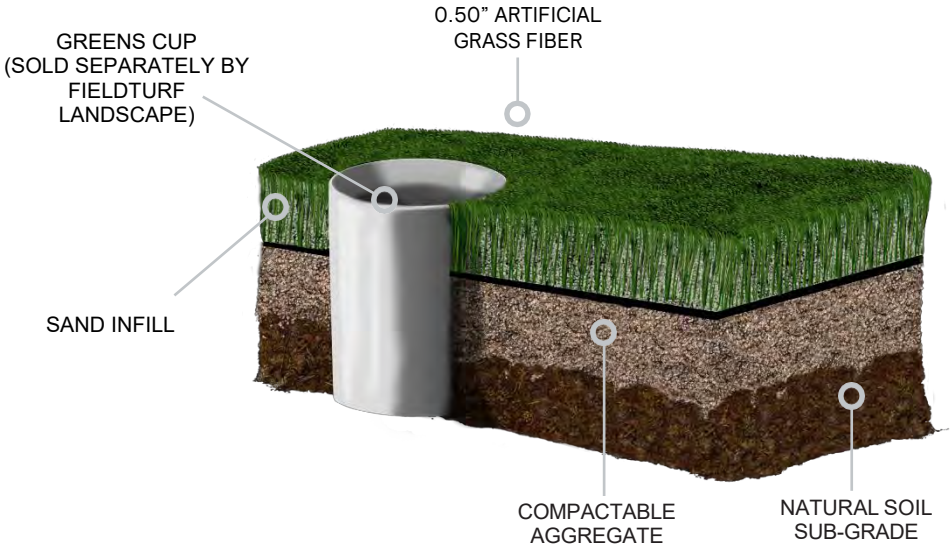

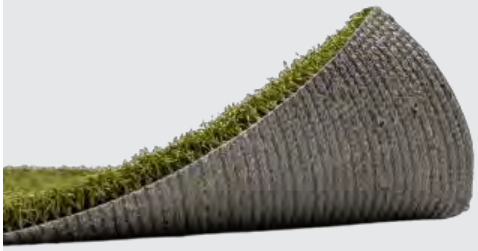

FieldTurf LANDSCAPE
A Tarkett Sports Company

VERSA LUSH XM

EASYTURF® COLLECTION

PROPERTY	VALUE	METHOD
Pile Height	1.00”	D5823
Pile Weight	48 OZ/YD^2	D5848
Total Weight	74 OZ/YD^2	D5848
Gauge	3/8”	D5793
Primary Backing Weight	8+ OZ/YD^2	D5848
Primary Yarn Type	UV-Resistant Polyethylene	N/A
Primary Yarn Structure	Diamond Mono	N/A
Primary Yarn Color	Field & Olive Green	N/A
Primary Yarn Denier	11970	D1907
Secondary Yarn Type	UV-Resistant Polyethylene	N/A
Secondary Yarn Structure	Thatch	N/A
Secondary Yarn Color	Olive Green	N/A
Secondary Yarn Denier	5000	D1907
Coating Weight	18 OZ/YD^2	D5848
Coating Type	MaxxFlow	N/A
Water Permeability	350+ IN/HR	DIN 18-035
Total Infill	2+ LBS/FT^2	N/A

- Unmatched Warranty
- Proudly Made in the USA with Global Components
- Industry Leading Drainage and Performance
- Environmentally Friendly

MAXXFLOW

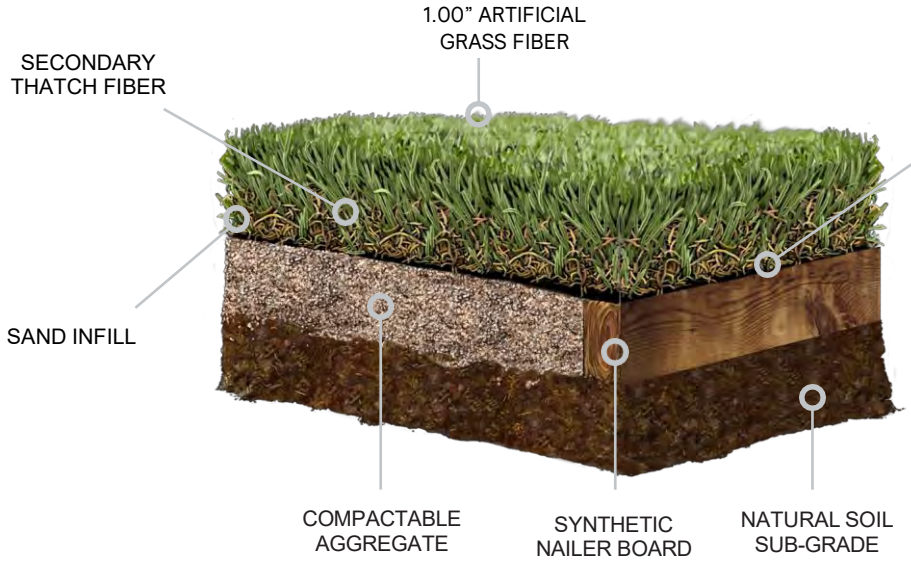

FieldTurf COMMERCIAL
A Tarkett Sports Company

COMMAND CORE

PROPERTY	VALUE	METHOD
Pile Height	1.625”	D5823
Pile Weight	65 OZ/YD^2	D5848
Total Weight	91 OZ/YD^2	D5848
Gauge	3/8”	D5793
Primary Backing Weight	8+ OZ/YD^2	D5848
Primary Yarn Type	UV-Resistant Polyethylene	N/A
Primary Yarn Structure	Mono/Thatch Combo	N/A
Primary Yarn Color	Field & Olive Green & Nutmeg	N/A
Primary Yarn Denier	19000	D1907
Secondary Yarn Type	UV-Resistant Polyethylene	N/A
Secondary Yarn Structure	Slit Film	N/A
Secondary Yarn Color	Field Green	N/A
Secondary Yarn Denier	10000+	D1907
Grab Tear Length	>275 LBS/Force	D5034
Grab Tear Width	>275 LBS/Force	D5848
Coating Weight	18 OZ/YD^2	D5848
Coating Type	AquaFlow	N/A
Water Permeability	300+ IN/HR	DIN 18-035
Total Infill	2.5-3 LBS/FT^2	N/A

Variation of +/- 5% on above listed property values are within normal manufacturing tolerances.

- Unmatched Warranty
- Proudly Made in the USA with Global Components
- Industry Leading Drainage and Performance
- Environmentally Friendly

AQUAFLOW

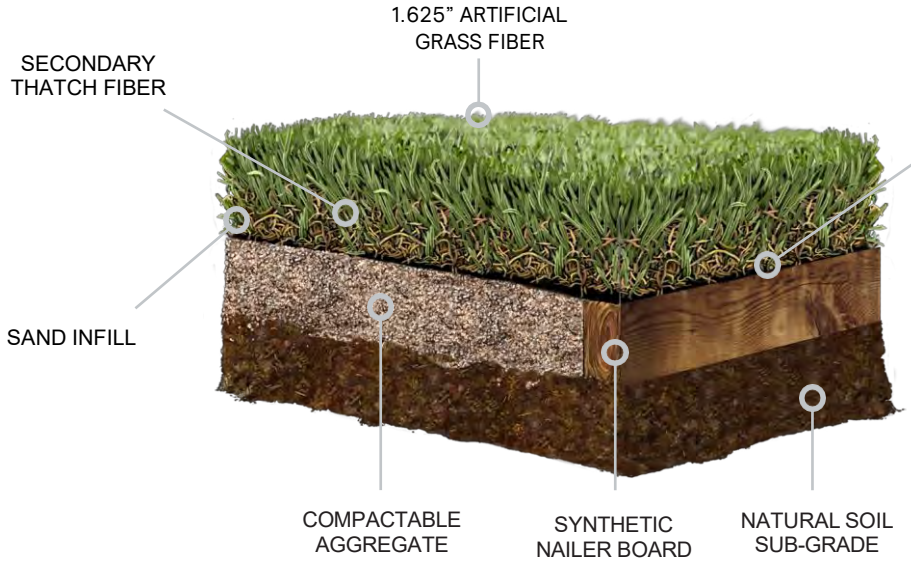

FieldTurf COMMERCIAL
A Tarkett Sports Company

COMMAND DUO

PROPERTY	VALUE	METHOD
Pile Height	1.50”	D5823
Pile Weight	55 OZ/YD^2	D5848
Total Weight	81 OZ/YD^2	D5848
Gauge	3/8”	D5793
Primary Backing Weight	8+ OZ/YD^2	D5848
Primary Yarn Type	UV-Resistant Polyethylene	N/A
Primary Yarn Structure	Diamond Mono	N/A
Primary Yarn Color	Field & Olive Green	N/A
Primary Yarn Denier	11970	D1907
Secondary Yarn Type	UV-Resistant Polyethylene	N/A
Secondary Yarn Structure	Slit Film	N/A
Secondary Yarn Color	Summer Green	N/A
Secondary Yarn Denier	4950	D1907
Grab Tear Length	>275 LBS/Force	D5034
Grab Tear Width	>275 LBS/Force	D5848
Coating Weight	18 OZ/YD^2	D5848
Coating Type	AquaFlow	N/A
Water Permeability	300+ IN/HR	DIN 18-035
Total Infill	2-3 LBS/FT^2	N/A

Variation of +/- 5% on above listed property values are within normal manufacturing tolerances.

- **Unmatched Warranty**
- **Proudly Made in the USA with Global Components**
- **Industry Leading Drainage and Performance**
- **Environmentally Friendly**

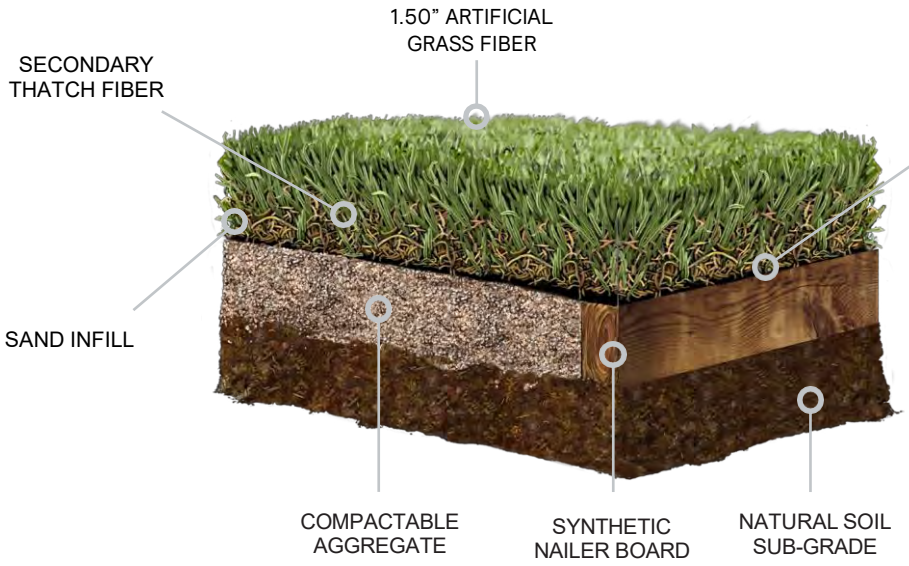

AQUAFLOW

FieldTurf COMMERCIAL
A Tarkett Sports Company

COMMAND PLAY

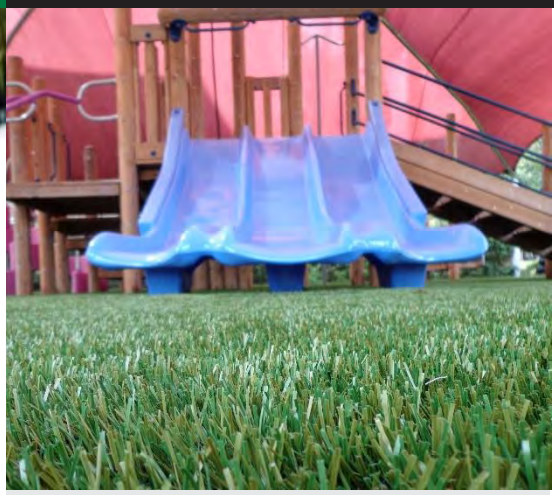

PROPERTY	VALUE	METHOD
Pile Height	1.625”	D5823
Pile Weight	65 OZ/YD^2	D5848
Total Weight	91 OZ/YD^2	D5848
Gauge	3/8”	D5793
Primary Backing Weight	8+ OZ/YD^2	D5848
Primary Yarn Type	UV-Resistant Polyethylene	N/A
Primary Yarn Structure	Diamond Mono	N/A
Primary Yarn Color	Field & Olive Green	N/A
Primary Yarn Denier	11970	D1907
Secondary Yarn Type	UV-Resistant Polyethylene	N/A
Secondary Yarn Structure	Thatch	N/A
Secondary Yarn Color	Nutmeg & Olive Green	N/A
Secondary Yarn Denier	5000	D1907
Grab Tear Length	>275 LBS/Force	D5034
Grab Tear Width	>275 LBS/Force	D5848
Coating Weight	18 OZ/YD^2	D5848
Coating Type	AquaFlow	N/A
Water Permeability	300+ IN/HR	DIN 18-035
Total Infill	3 LBS/FT^2	N/A

Variation of +/- 5% on above listed property values are within normal manufacturing tolerances.

- Unmatched Warranty
- Proudly Made in the USA with Global Components
- Industry Leading Drainage and Performance
- Environmentally Friendly

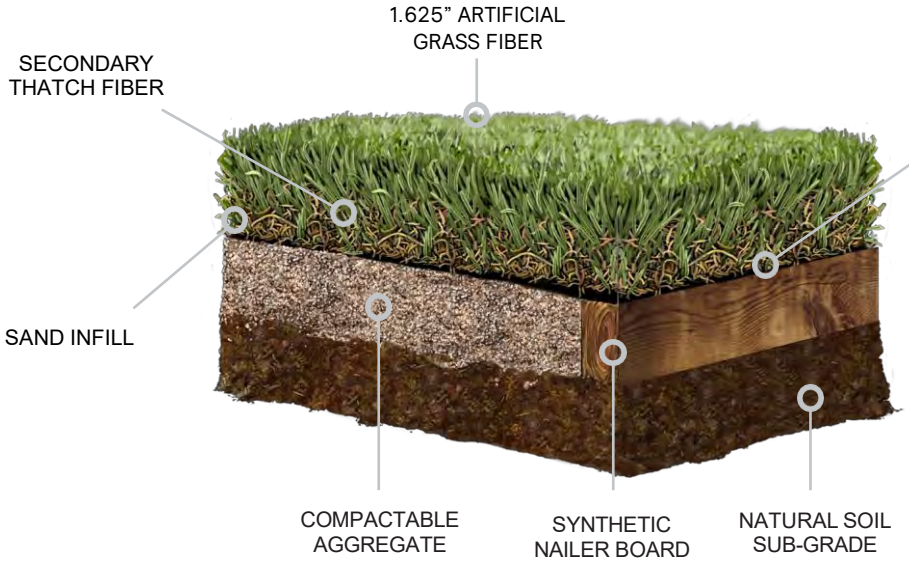

AQUAFLOW

FieldTurf®
COMMERCIAL
A Tarkett Sports Company

COMMAND PRO WITH PAD

PROPERTY	VALUE	METHOD
Pile Height	0.750"	D5823
Pile Weight	40 OZ/YD^2	D5848
Total Weight	133 OZ/YD^2	D5848
Gauge	3/16"	D5793
Primary Backing Weight	8+ OZ/YD^2	D5848
Primary Yarn Type	UV-Resistant Polyethylene	N/A
Primary Yarn Structure	Slit Film	N/A
Primary Yarn Color	Field Green	N/A
Primary Yarn Denier	10000+	D1907
Secondary Yarn Type	UV-Resistant Polyethylene	N/A
Secondary Yarn Structure	Thatch	N/A
Secondary Yarn Color	Field Green	N/A
Secondary Yarn Denier	5000	D1907
Coating Weight	20 OZ/YD^2	D5848
Coating Type	Solid	N/A
Water Permeability	N/A	DIN 18-035
Total Infill	None	N/A

Variation of +/- 5% on above listed property values are within normal manufacturing tolerances.

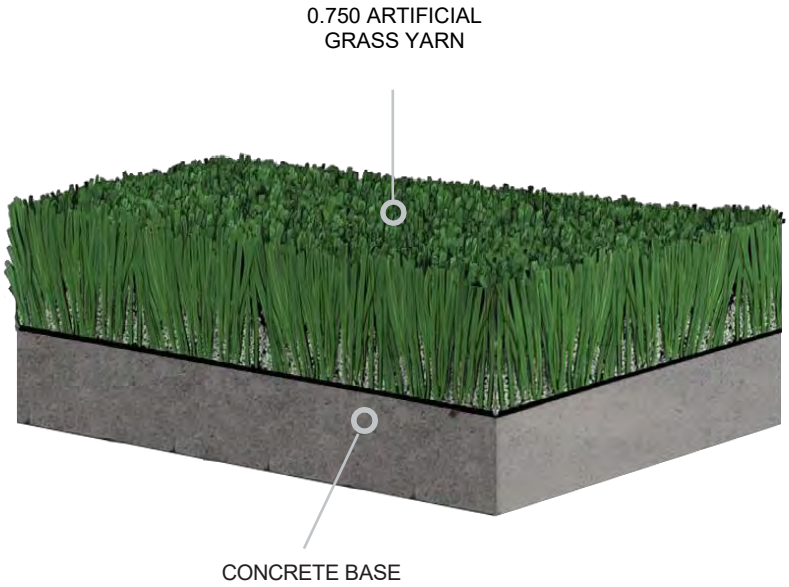

- Unmatched Warranty
- Proudly Made in the USA with Global Components
- Industry Leading Drainage and Performance
- Environmentally Friendly

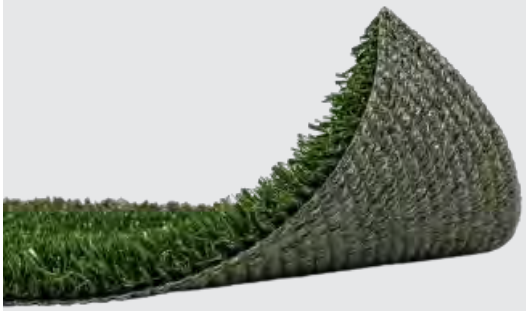

FieldTurf®
COMMERCIAL
A Tarkett Sports Company

COMMAND PRO

PROPERTY	VALUE	METHOD
Pile Height	0.750”	D5823
Pile Weight	40 OZ/YD^2	D5848
Total Weight	68 OZ/YD^2	D5848
Gauge	3/16”	D5793
Primary Backing Weight	8+ OZ/YD^2	D5848
Primary Yarn Type	UV-Resistant Polyethylene	N/A
Primary Yarn Structure	Slit Film	N/A
Primary Yarn Color	Field Green	N/A
Primary Yarn Denier	10000+	D1907
Secondary Yarn Type	UV-Resistant Polyethylene	N/A
Secondary Yarn Structure	Thatch	N/A
Secondary Yarn Color	Field Green	N/A
Secondary Yarn Denier	5000	D1907
Coating Weight	20 OZ/YD^2	D5848
Coating Type	Solid	N/A
Water Permeability	N/A	DIN 18-035
Total Infill	None	N/A

Variation of +/- 5% on above listed property values are within normal manufacturing tolerances.

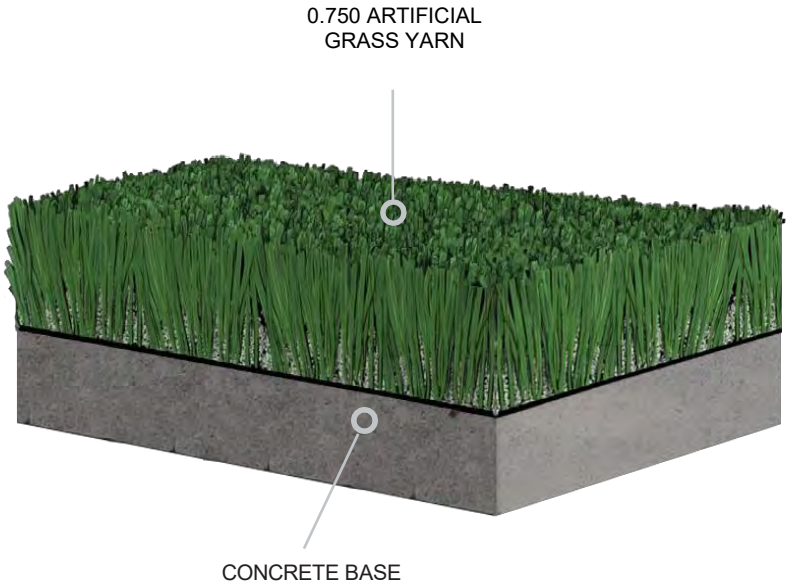

- Unmatched Warranty
- Proudly Made in the USA with Global Components
- Industry Leading Drainage and Performance
- Environmentally Friendly

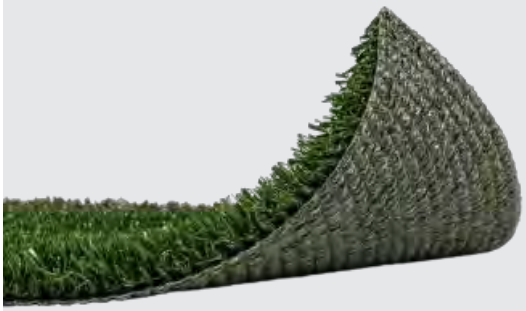

FIELDTURF INNOVATION+ PERFORMANCE CENTER

HINGED **VERSATILE**

The ultimate drainage and shock underlayment solution.

VersaTile	
Dimensions	42'' x 24''
Thickness	13mm / ½''
Weight per sq.ft.	220g / 0.5lbs
Dimensional Stability - 30°C / 60°C	< 1%
Installation specification	Liner between stones and tiles
Installation specificity	Unroll carpet over the tiles before applying any equipment load

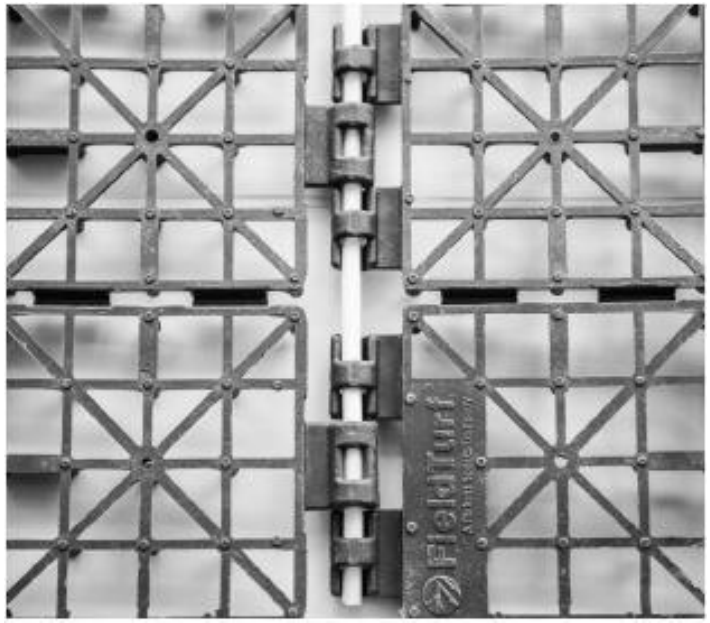

FIELDTURF INNOVATION & RESEARCH CENTRE
PRIVILEDGED & CONFIDENTIAL — THIS REPORT IS FOR INTERNAL USE ONLY.

FieldTurf®
A Tarkett Sports Company

TURF CUSHION™

Patent Pending

TECHNICAL DATA SHEET

PTS-KSF 024 (2 in) • PTS-KSF 016 (1.5 in) • PTS-KSF 100 (1.0 in) • PTS-KSF 050 (0.5 in)

TURF CUSHION™ with Eco Raw® is a Synthetic Turf Underlay that provides industry leading performance when used as part of an overall playground installation system. TURF CUSHION™ is a sustainable and renewable product that can be 100% reclaimed at the end of of its service life. Typical values are as follows:

PHYSICAL PROPERTIES	TEST METHOD	PTS-KSF 024 (2 in)	PTS-KSF 016 (1.5 in)	PTS-KSF 100 (1 in)	PTS-KSF 050 (0.5 in)
Density	ASTM 3575-08	1.5 lb/ft3	1.5 lb/ft3	1.5 lb/ft3	1.5 lb/ft3
Size	ASTM 3575-08	4'X5'	4'X5'	4'X5'	4'X125' rolls
Thickness	ASTM 357 8-08	2"	1.5"	1"	.50” (1/2”)
Compressive strength @ 25%	ASTM 3575-08	7 PSI	7 PSI	7 PSI	4.5 PSI
Compressive strength @ 50%	ASTM 3575-08	14 PSI	14 PSI	14 PSI	7.5 PSI
Compressive Set	ASTM 3575-08	< 20%	< 20%	< 20%	< 20%
Tensile Strength	ASTM 3575-08	23 PSI	23 PSI	23 PSI	23 PSI
Tear Resistance	ASTM 3575-08	7 lb/in	7 lb/in	6 lb/in	5.5lb/in
Cell Size	ASTM 3576-04	2.5MM	2.5MM	2.5MM	2.5MM
Water Absorption	ASTM 3575-08	< .3lb/ft2	< .3lb/ft2	< .3lb/ft2	< .3lb/ft2
Thermal Stability	ASTM 3575-08	<2%	<2%	<2%	<2%
GMAX	ASTM F 1292	Up to 12 ft	Up to 9 ft	Up to 7 ft	Up to 5 ft
HIC	ASTM F 1292	Up to 12 ft	Up to 9 ft	Up to 7 ft	Up to 5 ft

Note: GMAX and HIC values are dependent upon test conditions. Values shown are as reported by Pro-Turf Lab using 2 to 4 lbs. infill per sq. ft. and Synthetic Turf. The maximum criteria at a specific drop height is 200 GMAX and 1,000 HIC.

OUR TEAM

FieldTurf has one of the most experienced and knowledgeable teams in the industry. By choosing us, you're selecting a partner that is committed to you; and we're with you for the long term. From start to finish, your team of FieldTurf experts is ready to help turn your dream facility into reality. Let's Change the Game together.

MEET OUR LEADERSHIP TEAM

Eddy Schmitt, MBA
President & CEO, Tarkett Sports
eddy.schmitt@tarkettsports.com

- HEC Paris, University of Chicago Booth School of Business, Vienna University of Economics and Business

Drew Beynon, MBA
Chief Operating Officer
drew.beynon@tarkettsports.com

- Bucknell University University of North Carolina
- Over 20 years with Tarkett Sports

Jamie MacDonald
Senior Vice-President of Sales, North America
jamie.macdonald@tarkettsports.com

- Purdue University
- Over 15 years with FieldTurf

HOW WE CHANGE THE GAME

WE MAKE IT EASY

Everything we do, and the way we do it, is aimed to make the process easier for you. We focus on ensuring your experience is memorable and hassle-free.

WE INSIST ON QUALITY

We don't cut corners. We've invested in quality materials, quality manufacturing and quality teams to deliver sustainable surfaces that make a difference for your program.

WE INVEST IN INNOVATION

We're dedicated to an endless pursuit of innovation through science. Designed and tested at the FieldTurf Innovation and Performance Center, our systems set the bar in their respective classes. Our game-changing innovations continue to change the game.

WE GIVE BACK

Giving back to communities and youth sports is at the core of our values. Through partnerships with Make-A-Wish Georgia, Soccer in the Streets, USA Football and numerous others, FieldTurf continues to Change the Game.

OUR TEAM

FieldTurf has one of the most experienced and knowledgeable teams in the industry. By choosing us, you're selecting a partner that is committed to you; and we're with you for the long term. From start to finish, your team of FieldTurf experts is ready to help turn your dream facility into reality. Let's Change the Game together.

MEET OUR LEADERSHIP TEAM

Eddy Schmitt, MBA
President & CEO, Tarkett Sports
eddy.schmitt@tarkettsports.com

- HEC Paris, University of Chicago Booth School of Business, Vienna University of Economics and Business

Drew Beynon, MBA
Chief Operating Officer
drew.beynon@tarkettsports.com

- Bucknell University University of North Carolina
- Over 20 years with Tarkett Sports

Jamie MacDonald
Senior Vice-President of Sales, North America
jamie.macdonald@tarkettsports.com

- Purdue University
- Over 15 years with FieldTurf

HOW WE CHANGE THE GAME

WE MAKE IT EASY

Everything we do, and the way we do it, is aimed to make the process easier for you. We focus on ensuring your experience is memorable and hassle-free.

WE INSIST ON QUALITY

We don't cut corners. We've invested in quality materials, quality manufacturing and quality teams to deliver sustainable surfaces that make a difference for your program.

WE INVEST IN INNOVATION

We're dedicated to an endless pursuit of innovation through science. Designed and tested at the FieldTurf Innovation and Performance Center, our systems set the bar in their respective classes. Our game-changing innovations continue to change the game.

WE GIVE BACK

Giving back to communities and youth sports is at the core of our values. Through partnerships with Make-A-Wish Georgia, Soccer in the Streets, USA Football and numerous others, FieldTurf continues to Change the Game.

DARREN GILL

Phone:
(514) 375-2584
Email:
dgill@fieldturf.com

Overview

An insanely curious and decisive executive focused on achieving alignment, leading to execution. A highly adaptable leader that deals with members of our executive team from around the globe. Relentlessly reliable team player who connects the dots and is unbelievably agile, resilient, and committed. A servant leader who believes in integrity, transparceny, trust and accountability. Experienced marketer and innovator who has made an impact in the world of sports as a leading expert in the artificial turf industry.

Experience

FieldTurf (Tarkett Sports) – 2000 – Present

- Executive Vice-President (Mar 2022 – Present)
- Senior Vice-President of Marketing and Innovation (Sep 2018 – Mar 2022)
- Vice-President - Marketing, Innovation, Customer Service (Jul 2014 - Sep 2018)
- Vice-President - Global Marketing (Mar 2010 - Jul 2014)
- Director of Marketing (2007 – 2010)
- Marketing Manager (2004 – 2007)
- Marketing Coordinator (2001 – 2004)
- Marketing Assistant (Dec 2000 - Jun 2001)

Education

Concordia University
Bachelor of Commerce (B.Com.), Marketing
1998 - 2001

CEGEP - John Abbott College
1996 - 1998

Loyola High School of Montreal
1991 - 1996

Awards / Honors

Coach & Athletic Director – 40 Under 40 (Class of 2019)

Bidder: FieldTurf USA, Inc.

Eric J. Fisher
Director of Sales-SmartBuy
FieldTurf USA, Inc.
18765 SW Boones Ferry Rd, Suite 150
Tualatin, OR 97062

Education:

- West Linn High School- Diploma- June 2001
- Portland State University- B.S. Communications- June 2006

Experience:

- Atlas Tracks, Inc. Foreman-June 2005-2006
- Widmer Brothers Brewing- Waiter June 2007
- FieldTurf USA, Inc , Cooperative Purchasing Program-SmartBuy (Previously, Atlas Tracks, Inc.) October 2008 to 2011

Job Responsibilities:

- Promote and sell FieldTurf/SmartBuy Cooperative Purchasing Program
- Grow new markets in underperforming cooperative purchasing states
- Coordinate with Cooperative Purchasing Agency members nationwide to best market the contract
- Sell Cooperative Purchasing Program to schools/municipalities.
- Travel to trade shows in Cooperative Purchasing states to promote and educate schools/municipalities on how to utilize the program in their respective state.
- Create quotes and budget estimates for schools and owners.
- Compile and mail sales literature to clients who have expressed interest in the program.
- Aid in the design of spreadsheets including updating, changing and adding products and pricing.
- Work with FieldTurf, Beynon and California Products on marketing and sales ventures.
- Coordinate with Ross Hinrichs and Patrick Dawson regarding insurance, bonding and subcontracts.
- Visit jobsites to coordinate projects and network with owners and subcontractors.
- Attend school board meetings, presentations and roll-out meetings to help serve our clients and partners.
- Conduct presentations on the benefits of cooperative purchasing from a cost and efficiency perspective.

Interests:

- Superbike asphalt track riding
- Cooking
- Indy films
- Sports cars
- Skydiving
- Bicycling
- Music

Technical Skills:

- Microsoft word, excel, powerpoint and outlook proficient
- Excellent public speaker
- Organized and focused

- Task oriented
- Receptive to organizational and individual change
- Document editing and business writing
- Works well in groups
- Experienced and efficient traveler

Bidder: FieldTurf USA, Inc.

Sarah Morehead
Director of Operations - SmartBuy
FieldTurf USA, Inc.
18765 SW Boones Ferry Rd. Suite 150
Tualatin, OR 97062
888-209-0065 ext. 230

Education:
Kansas State University
B.A. Psychology- May 1994
M.B.A in Management- May 1996

Experience:
FieldTurf Cooperative Purchasing Program – SmartBuy (Previously Atlas Tracks, Inc.) Jan. 1, 2005 to Present

Director of Operations-SmartBuy Job Responsibilities:

- Manage FieldTurf Cooperative Purchasing Programs, Contracts and Bids
- Develop strong business relationships with Coop agency representatives in each state.
- Manage Coop projects nationwide
- Coordinate with Atlas, FieldTurf, Beynon, and California Products to establish Coop products, pricing, and marketing and promotion of Coop Programs.
- Sell Cooperative Purchasing Program to schools/municipalities.
- Limited travel to trade shows in Cooperative Purchasing states to promote and educate schools/municipalities on how to utilize the program in their respective states.
- Create quotes and budget estimates for municipalities and owners.
- Coordinate with Coop Account Specialists regarding insurance, bonding and subcontracts, change orders, and close out documents.
- Attend school board meetings, presentations and roll-out meetings to help serve our clients and partners.
- Calculate RS MEANS required Coop quotes

DREW BEYNON

3923 Briar Knoll Circle • Phoenix, Maryland 21131

PROFESSIONAL EXPERIENCE

TARKETT SPORTS (Track and Field Division), Hunt Valley, Maryland • 2008-Present
Largest global manufacturer and installer of high-performance athletic surfaces. A division of Tarkett, a $2.9B multinational flooring company owned by Kohlberg Kravis Roberts & Co. (KKR).

Chief Operating Officer, 2010-Present
Vice President of Business Development, 2008-2010

- Manages daily operations and strategic initiatives with full P&L responsibility. Develops sales strategies, cultivates executive relationships, and secures new accounts resulting in regional, national and international clients for this $60M business. Leads over 140 professionals in four (4) regional offices.

BEYNON SPORTS SURFACES, Hunt Valley, Maryland • 2005-2008
Family-owned manufacturing and construction firm focused on the sports surfacing market.

Vice President of Business Development

- Built Beynon Sports Surfaces (BSS) into the industry leader and widely-respected brand. Negotiated and closed sale of BSS to Tarkett Sports and continued to lead the organization.

NOTTINGHAM PROPERTIES, Towson, Maryland • 2003-2005
$110M regional real estate investment and development company.

Acquisitions and Development Manager

- Identified high-potential office, retail and industrial properties in the Baltimore, Harford and Howard County markets, and performed comprehensive financial analyses. Special emphasis on developing retail projects from conception to tenant build-out, with full authority for highest and best-use analysis, design, permitting, construction budget development, and lease negotiation. Managed 3 employees.

ACCENTURE, New York, New York and Washington, DC • 1997-2001
$22B global provider of management consulting, technology and outsourcing services.

Senior Consultant, 2000-2001
Consultant, 1999-2000
Process Analyst, 1997-1999

- Promoted 3 times in 3 years to provide financial and valuation analyses, project profitability and commencement decisions. Directed multiple technology initiatives for diverse Fortune 500 companies and public entities. Managed up to 6 team members, including recruiting, training and performance management.

EDUCATION

Master of Business Administration (MBA)
Kenan-Flagler Business School, University of North Carolina at Chapel Hill, Chapel Hill, North Carolina

Bachelor of Science in Business Administration
Bucknell University, Lewisburg, Pennsylvania

Donny Jones

Donny is one of the most experienced Turf Installer, Base Contractor, not only with FieldTurf, but in the world. He has been involved with the installations of artificial turf for over 25 years and with FieldTurf since the beginning for over ten years and has an impressive number of fields to his credit, the fields listed below are just a few of the fields in recent years where he was the supervisor. With Fieldturf and previous to Fieldturf he has done many NFL fields, Golf Driving Ranges, Major league Baseball Fields, Olympic Stadiums (Australia 2000 Olympic games) to just name a few. Most recently he was involved with the renovation of Seattle Parks Interbay Golf Driving Range to Fieldturf.

Magnusson Park (5 fields) 2009
Seattle, WA

New Lynnwood High School (5 fields) 2009
Bothell, WA

Maplewood Driving Range 2009
Drainage and Turf Repairs
Renton, WA

Muckleshoot K-12 2009

Chiawana High School 2009
Pasco, WA

University of Washington Husky Stadium 2009
Seattle, WA

Battlepoint Soccer Park (2) Fields 2009
Bainbridge Island, WA

Redmond High School 2009
Redmond, WA

Juanita High School 2009
Kirkland, WA

Sultan High School 2009
Sultan, WA

Orting High School 2009
Orting, WA

Hiawatha Playfields 2009
Seattle, WA

Steilacoom High School 2009
Steilacoom, WA

Sammamish High School 2009
Sammamish, WA

Bellevue High School 2009
Bellevue, WA

Interlake High School 2009
Bellevue, WA

Miller Playfields 2009
Seattle, WA

Woodinville High School (3 Fields) - 2009
Woodinville, WA

Miracle League Field 2009
Monroe, WA

Renton High School Stadium 2009
Renton, WA

Hazen High School - 2009
Renton, WA

Lindbergh High School - 2009
Renton, WA

Lower Woodland #7 - 2009
Seattle, WA

Mercer Island High School -2009
Mercer Island, WA

Seahawk Stadium – Qwest Field 2008
Seattle, WA

Mel Olsen 2008
Seattle, WA

Newport High School 2008
Bellevue, WA

Saghalie Soccer Field Park 2008
Federal Way, WA

Preston Park 2008
Preston, WA

Queen Anne Bowl – David Rodgers Park 2008
Seattle, WA

Glendale Golf Course 2008
Glendale, AZ

Moses Lake High School – 2008
Moses Lake, WA

Newport High School - 2008
Bellevue, WA

Georgetown Playfield - 2008

Seattle, WA

Glacier Peak High School - 2008
Snohomish, WA

Eastside Catholic - 2008
Sammamish, WA

Qwest Field - 2008
Seattle, WA

Seahawks Practice Facility - 2008
Renton, WA

Rainer Vista Boys & Girls Club-Soccer - 2008
Seattle, WA

Mel Olsen Stadium - 2008
Seattle, WA

Twin Ponds Soccer Fields (2 Fields) - 2008
Shoreline, WA

Lakeside Middle School – 2008
Bellevue, WA

Western Washington University - 2008
Bellingham, WA

Carl C. Sparks Stadium - 2008
Puyallup, WA

Memorial Field - 2008
Federal Way, WA

Royal High School - 2008
Royal City, WA

Kellogg Middle School - 2008
Shoreline, WA

Einstein Middle School - 2008
Shoreline, WA

Regional Athletic Complex (4 Fields) - 2008
Lacey, WA

Marymoor Park #1&#2 - 2008
Redmond, WA

Grasslawn Parks #2&#3 - 2008
Redmond, WA

Starfire Sports Complex (3 Soccer Fields) - 2008
Tukwila, WA

Microsoft West Campus-Soccer - 2008
Redmond, WA

Kings High School – Woolsey Stadium 2007
Seattle, WA

Washington Premier Soccer Club 2007
Puyallup, WA

Lakeside Upper School 2007
Seattle, WA

Shorecrest High School 2007
Shoreline, WA

Kalama High School 2007
Kalama, WA

Lake Stevens High School 2007
Everett, WA

Granite Falls High School 2007
Granite Falls, WA

Bothell High School 2007
Bothell, WA

Loyal Heights Playfield 2007
Seattle, WA

Marymoor Park – Baseball 2007
Redmond, WA

Edmonds – Woodway High School 2007
Edmonds, WA

Kiamak High School 2007
Mukilteo, WA

Mariner High School – Goddard Stadium 2007
Everett, WA

Robinswood Park 2007
Bellevue, WA

Brandies Hillel Day School 2007
San Rafael, CA

Granite Regional Park 2007
Sacramento, CA

Shorewood High School 2007
Shoreline, WA

Bothell High School 2007
Bothell, WA

Tassajara Soccer Complex 2006
Danville, CA

Mountlanke Terrace High School 2006
Mountlake Terrace, WA

Monterey Peninsula College 2006
Monterey, CA

Canyon Park Junior High School 2006
Bothell, WA

Shoreline School District 2006
Shoreline, WA

Washington State University – Martin Stadium 2006
Pullman, WA

Meadowdale High School 2006
Lynnwood, WA

Lampson Stadium – Kennewick Public Schools 2006
Kennewick, WA

Cowan Memorial Stadium – Fort Lewis Army Base 2005
Fort Lewis, WA

Inglemoor High School 2006
Kenmore, WA

Heritage Park Recreation Center 2005
Puyallup, WA

Bobby Morris Playfield – City of Seattle 2005
Seattle, WA
Lake Stevens High School 2005
Lake Stevens, WA

South Sound Stadium – North Thurston Public Schools 2005
Lacey, WA

Auburn Mountainview High School 2005
Auburn, WA

Denny Middle School 2005
Seattle, WA
Edmonds School District Stadium 2005
Seattle, WA

Whatcom Community College 2004
Bellingham, WA

Ingersol Stadium – Olympia High School 2004
Olympia, WA

Bishop Bllanchet High School 2004
Seattle, WA

Tahoma High School 2004
Covington, CA

Eastlake High School 2004
Sammamish, WA

Aloha High School 2004
Aloha, OR

BEYNON®
A Tarkett Sports Company
THE ULTIMATE SURFACE EXPERIENCE

Rob Gloeckner
Vice President Beynon West

19600 SW 129th Avenue
Suite A
Tualatin, OR 97062

Cell (503) 803-3060
Office (503) 691-2484
Fax (503) 692-0491

EXPERIENCE:

2013-present	Beynon Sports Surfaces, Inc. (Tarkett Sports) Vice President of West Coast Turf and Track Operations
2008-2013	FieldTurf Tarkett Director of Operations-North America
2001-2008	Field Turf Builders LLC General Manager

EDUCATION:

Linfield College, BA Finance

ADDITIONAL REFERENCES AVAILABLE ON REQUEST

BEYNON®
A Tarkett Sports Company
THE ULTIMATE SURFACE EXPERIENCE

www.beynonsports.com

RICK W. EDIGER

2613 Izoro Bend
Cedar Park, Texas 78613

Phone (512) 778-6170
Cell (512) 635-2594
Fax (512) 778-6180

EMPLOYMENT HISTORY

Vice President of Operations — January 2009 – Present
Beynon, A Tarkett Sports Company — Georgetown, TX

Responsible for the United States operations of Beynon Sports Surfaces, Inc. specializing in the installations of synthetic running tracks and elastic layer pad systems for artificial turf fields. Duties include overseeing all installation operations. Manage an office staff of five (5) and an installation staff of 50.

Vice President of Operations — March 2004 – Present
DeFargo Sports Surfaces, Inc. — Georgetown, TX

Responsible for the United States operations of Beynon Sports Surfaces, Inc. specializing in the installations of synthetic running tracks and elastic layer pad systems for artificial turf fields. Duties include overseeing all installation operations. Manage an office staff of five (5) and an installation staff of 50.

Vice President, Outdoor Operations — June 2003 – March 2004
SRI Sports, Inc. — Leander, TX

Southern District Manager — January 1999 – June 2003
SRI Sports, Inc. — Leander, TX

National Operations Manager — August 1990 – January 1999
SRI Sports, Inc. — Leander, TX

Responsible for the daily operation and installation of running tracks, Elastic Layer pads, Astroturf and Astroplay Fields. Manage an organization of six office personnel, 10 regional field superintendents, and over 200 field installers.

Duties Include:

- Annual Budgeting
- Procurement of Capital Expenditures for the Division
- Negotiation of Contracts and Change Orders
- Annual Negotiation of Vendor Contracts
- Job Estimating
- Job Cost Management
- Inventory Management
- Client and Architectural Relations
- Coordination of Installation Crews Nationally

Office Manager — 1982 – 1991
Tufflight Track Corp. — Wichita, KS

Responsible for all aspects of the daily operation of a small company engaged in selling and installation of latex running tracks.

EDUCATION

Wichita State University, Wichita, Kansas 1981-1986
B.B.A. Business Administration, Finance

ADDITIONAL REFERENCES AVAILABLE ON REQUEST

Michael Vincent

Senior Director of Construction and Estimation

Mike Vincent joins us after 12 years of experience in field and in office in the industry. He has experienced in numerous construction activities including the development and maintenance of build schedules, bid management, bonding and insurance, change management, cost control and estimating, document control and safety. He has had hands on involvement as a Project Manager and Superintendent for a local General Contractor in southeast Michigan. Mike has provided detailed cost analysis for numerous Design / Build applications to assist in obtaining a trusting working relationship between all parties.

Mike also has experience in civil construction during summer recess from Ferris State University where he received an Associates Degree of Science in Construction Management. He has also successfully completed the 30-hour OSHA course program.

Representative project experience includes:

- ***University of Michigan – Indoor Practice Facility, MI***
- ***University of Michigan – Stadium Replacement, MI***
- ***Central Michigan University – Indoor Practice Facility, MI***
- ***East Ridge High School, MN***
- ***Decatur High School - IN***
- ***Concordia College Jake Christiansen Stadium Field / Baseball In-field, MN***
- ***Winona St. MN.***
- ***Indiana State University – Stadium Replacement, IN***
- ***Indiana State University Baseball In-Field, IN***
- ***Purdue University Mackey Arena Practice Field, IN***
- ***University of Toledo Indoor Practice Facility, OH***
- ***Dixie State College Stadium Field Replacement, UT***
- ***Burleson High School – Stadium / Practice / Indoor Practice, TX***
- ***Mumford High School Baseball and Softball, TX***
- ***Independence Bowl, LA***
- ***Eastern Michigan University Indoor Practice Facility, MI***
- ***Ball State University Student Wellness Center, IN***
- ***Wabash College Stadium and Practice Fields, IN***
- ***Munster High School Stadium and Practice Fields, IN***
- ***Alma College Stadium Replacement, MI***
- ***Detroit Country Day School Stadium Replacement and Indoor Practice Facility, MI***
- ***Capital University Stadium Replacement, IN***
- ***Siena Heights University Stadium and Track, MI***
- ***Simpson College Stadium Field, IA***

*****additional references can be provided upon request***

MIKE GASPAROVIC

16 Alt Rd
Hunt Valley, MD 21030

Phone (410) 771-9473
Cell (410) 218-0792
Fax (410) 771-9479

EMPLOYMENT HISTORY

Vice-President of Research and Development
Beynon, A Tarkett Sports Company — 5/2008 – Present
Beynon Sports Surfaces, Inc. — 2002 – 4/2008
Hunt Valley, MD

Responsible for all aspects of the Beynon Sports Surfacing Inc. polyurethane program, including raw materials, Quality Control, manufacturing, research and development.

Head Chemist — 1997 – 2001
Martin Surfacing, Inc. — Hunt Valley, MD

Responsibilities included the development and implementation of polyurethane for athletic surfacing. Established Quality Control program for incoming and outgoing products. Accountable for Quality Control of manufactured products.

Research Scientist — 1995-1997
MCP Urethanes — Pittsburg, KS

Responsibilities include the development of plastics and polymers including polyurethanes, polyesters, epoxides and other polymers. Main focus was on developing polyurethane flooring system.

Research Associate — 1993-1995
Business and Technology Institute — Pittsburg, KS

Succeeded in developing a hydroxylation process for soybean oil, which was used to create a variety of low-viscosity polyols to be used in the manufacturing of polyurethane materials. Work includes several published papers and a major research grant from BF Goodrich.

EDUCATION

Pittsburg State University, Pittsburg, Kansas
BS and MS in Chemistry

ADDITIONAL REFERENCES AVAILABLE ON REQUEST

Marie-Christine Raymond,
Director of Operations

Mrs. Raymond has several years of experience in project management. Marie-Christine came to us in 2009 with 3 years of experience in dealing with General Contractors, Installers, Sales Representatives, Architects, Owners and FIFA Standards. She has coordinated projects from the bidding process to execution, invoicing and analysis of revenues and costs of projects. She is now leading the Project Management and Drafting teams who handle all the projects in North America.
Marie-Christine has a vast quality of leadership, teamwork and interpersonal communication skills. Marie-Christine has been with FieldTurf since 2009. Marie-Christine received her BA in Business Administration from Université du Québec à Montréal and was an employee of Lumid, Inc., manufacturer in custom lighting fixtures previously.

JOHN T. BEYNON

1685 Campbell Road
Forest Hill, Maryland 21050

Phone (410) 879-8526
Cell (410) 935-4058
Fax (410) 879-6899

CAREER OBJECTIVE

To provide consultation to owners, architects, and builders in the design and construction of state of the art indoor and outdoor athletic facilities.

SUMMARY OF QUALIFICATIONS

- 43 years experience in the design, construction and renovation of indoor and outdoor athletic facilities.
- Founder and Chief Executive Officer of the leading designer, manufacturer and installer of polyurethane athletic surfacing in the United States.
- Knowledge of wood flooring, wall lining systems, glass-viewing walls, artificial turf and reinforced natural grass playing fields.

EXPERIENCE

Founder, President and C.E.O.
Beynon, A Tarkett Sports Company — May 2008 – Present
Beynon Sports Surfaces, Inc. — December 2001 – April 2008
Hunt Valley, MD

Founded Beynon Sports Surfaces, Inc. as designer, manufacturer, and installer of polyurethane athletic surfacing. Manufacturer of full range of polyurethane, binder, structural spray and 2-C polyurethane, for approved applicators of BSS-track and field surfaces, tested and approved by IAAF. Provide and install IAAF certified full-depth polyurethane as collegiate running tracks with factory-trained crews.

Manufacture and install, with factory trained installation crews, gymnasiums and fieldhouse poured in place polyurethane athletic surfaces trademarked as PolyTurf™ and PolyTurf Plus™.

Founder, President and C.E.O. — November 1999–November 2001
John T. Beynon Athletic Facility Consultant — Forest Hill, MD

Consulted exclusively for Athletic Polymer Systems, Inc. of Corona, CA and Mission Clay Products, Inc. of Pittsburgh, KS. Provided expertise in design of polyurethane track and field surfaces, including installation personnel, equipment and procedures, sales techniques and services, and polyurethane manufacturing requirements.

Through my contacts and experience in the polyurethane athletic surfacing industry, assisted in developing APS, Inc. as a qualified track surfacing fieldhouse contractor.

Founder, President and C.E.O. — April 1974 – June 1999
Martin Surfacing, Inc. — Hunt Valley, MD

Founded Martin Surfacing as regional installation contractor for Versaturf 360™ poured-in-place polyurethane athletic surfacing, pre-finished wall panel systems and glass viewing walls for racquetball and squash courts.

- Provided leadership and developed reputation as the premier designer, manufacturer and installer of polyurethane athletic surfacing in the United States.
- Formed the entity DD Martin Surfacing, Inc. in 1998 through merging Martin Surfacing with Desso/DLW of Holland. Merger was an outcome of the working relationship between the two companies. Martin Surfacing provided distribution in North America of Desso's artificial turf systems.
- Produced knitted nylon artificial turf system – the only competitor to AstroTurf ™.
- Designed and installed Grass Master™ reinforced natural grass system, to become the state of the art natural grass playing field.
- Supervised the building of over 5,000 gymnasiums and fieldhouses and over 300 Olympic caliber running tracks – more than any other company in the United States.

National Sales Manager January 1971 – April 1974
Powerlock Systems, Inc. Philadelphia, PA

- Participated in the design and development of Versaturf 360™ and the aliphatic polyurethane coating. Included the development of proper installation techniques and sales and marketing procedures.
- Powerlock Systems are the manufactures and designers of premier wood flooring systems for indoor courts and multipurpose facilities. The originators of the 'clip and channel' wood flooring system and Versaturf 360™ poured-in-place polyurethane surfacing.

SAMPLE OF ACCOMPLISHED FACILITIES

- Boston University Track & Tennis Ctr — Boston, MA
- University of Iowa, Cretzmeyer Track — Iowa, IA
- University of Wisconsin — Whitewater, WI
- Fairfax County Public Schools — Fairfax, VA
- Tad Gormley Stadium — New Orleans, LA
- 1990 Goodwill Games, Huskey Stadium — Seattle, WA
- 1998 Goodwill Games, Mitchell Park — Nassau City, Long Island, NY
- Stanford University — Palo Alto, CA
- Disney Wide World of Sports — Orlando, FL
- United States Military Academy — West Point, NY
- University of Oregon — Eugene, OR
- United States Olympic Training Center — Chula Vista, CA
- University of North Carolina — Chapel Hill, NC
- North Carolina State University — Raleigh, NC
- University of Arkansas — Fayetteville, AR
- University of Maryland — College Park, MD

EDUCATION

Towson University, Towson, Maryland
Bachelor of Science in Mathematics, 1973
Minor: Business Administration

PROFESSIONAL AFFILIATIONS

- Maple Flooring Manufacturing Association, Member
- United States Tennis Court and Track Builders Association, Member

ADDITIONAL REFERENCES AVAILABLE ON REQUEST

Jeffery M. Yoos
1281 Manor Drive
Pittsburgh, PA 15241
412-475-3339
jyoos@fieldturf.com

PROFESSIONAL EXPERIENCE:

Russell Industries, Inc. – 1990-1996
Position: Project Management/Estimator/Sales
Duties: Manage multi-million dollar projects in the asphalt paving industry
Estimate & Bid as General Contractor for many types of projects – State, Turnpike, Commercial as well as Private
Surveying – differential leveling, layout, ect.
Scheduling
Contract Management
Design Build
Running Track/Synthetic Turf Base Construction

Amity Asphalt Paving, Inc. – 1996 – 2006
Position: Vice President/Operations
Duties: Manage operations for all work
Estimate & Bid as General Contractor for many types of projects – State, Turnpike, Commercial as well as Private.
Surveying – differential leveling, layout, ect.
Scheduling five (5) crews daily
Synthetic Turf Installations
Running Track/Synthetic Turf Base Construction

Fieldturf USA, Inc. – March 2006 – Present
Position: Vice President of Construction
Duties: Quality Control/Project Management for Fieldturf
Quality Control for base installations in North America
Bid & manage projects for Fieldturf as a General Contractor
Qualify & obtain Base Contractors in areas outside North Eastern United States
Manage Fieldturf's Pittsburgh Office

EDUCATION:

Purdue University – Building Construction Management – May 1990
Bachelor of Science- School of Technology

Related Course Work:

Construction Surveying	Construction Accounting	Construction Management
Construction Materials	Construction Scheduling	Document Administration
Construction Layout	Construction Site Planning	Construction Costs
Construction Estimating	Construction Supervision	Heavy Construction
Construction Mechanics	Soil Mechanics	Concrete Construction
Strength of Materials	Statics	

CFB-S

AMERICAN SPORTS BUILDERS ASSOCIATION

CERTIFIED FIELD BUILDER - Synthetic Turf

AMERICAN SPORTS BUILDERS ASSOCIATION

Through Its Certification Board

Has Conferred Upon

Jeff Yoos

The Designation

CERTIFIED FIELD BUILDER - Synthetic Turf

FOR EFFORTS TO RAISE THE PROFESSIONAL STANDARDS OF FIELD CONSTRUCTION AND FOR HAVING SUCCESSFULLY FULFILLED THE CONDITIONS OF ELIGIBILITY AND PASSED THE REQUIRED EXAMINATION.

In witness whereof we have set our hands on

this 31st *day of* December 2014

Certification valid for a period of 3 years.

Executive Vice President

Certification Chairman

FieldTurf
A Tarkett Sports Company
THE ULTIMATE SURFACE EXPERIENCE

Resume for

Gregory Weisbrich
2804 269th AVE NE
Redmond, WA 98053
425-246-8087
Greg.Weisbrich@fieldturf.com

My 24 years of expertise in the Athletic Field business as both a company owner and Manager has led to my current position of construction manager of the West Coast for Fieldturf USA. Managing sales, estimating and the construction process for complex projects in the synthetic turf and running track arena.

Projects I have been responsible for include the following types of work:

- Polyurethane playground surfaces
- Running tracks
- Residential sport courts
- Natural grass playing fields
- Synthetic turf playing fields

My responsibilities have included:

- Surveying of the construction limits
- Demolition
- Sub grade establishment
- Concrete installation. (Flatwork and curbing)
- Installation of drainage systems. (Drain pipe and catch basins)
- Installation of irrigation systems
- Installation of growing mediums and seeding of natural grass fields
- Quality Control/Project Management services
- Review and provide opinion letters for various sieve and gradation analyses
- Bid and manage projects
- Manage maintenance and installation personnel
- Perform pre-bid activities, such as procuring necessary plans and specifications, scope review, request for quotes from subcontractors, conducts site survey
- Attend pre-bid meetings and provide technical sales support
- Assemble bid forms and qualify all sub-trade proposals
- Verify site conditions throughout project and document critical site details
- Ensure construction execution complies with the plans and specifications
- Attend pre-construction and progress meetings
- Ensure that all needed materials and equipment for the project are delivered on time
- Ensure proper staging area for equipment and materials
- Verify that necessary critical documents, local rules, and permits are complete, delivered and/or posted
- Complete weekly forecast and production reports to Project Administrator and Director of Operations
- Monitor and communicate changes in the scope of a project and opportunities for additional revenue or cost savings to the Project Administrator
- Communicate work schedule to the owner, general contractor, subcontractors, and the Project Administrator
- Directly supervise subcontractors and vendors on the project site
- Enforce company and project-specific safety programs and regulations, standard operating procedures, and quality standards
- Work with customers, crews, and subcontractors to resolve operational and technical issues and challenges

- Review and approve subcontractor invoices, assist Project Administrator in billing subcontractor invoices and change orders
- Ensure proper project closeout; Certificate of Completion, maintenance hand-off and checklist completed
- Provide subject matter expert support to Sales/Customer to ensure award of contract
- Responsible for profit and loss of all projects to meet regional sales and earnings goals

Professional Experience

1989-1993	Precision Earthworks
1993-2001	Sports Systems International, Inc.
2001-2004	SRI Sports
2004-2009	Superior Sports Systems International, Co.
2004-present	Fieldturf USA, Inc.

Recent Projects Managed (Partial List)

September 2008	Miramar NAS synthetic ballfields
June 2008	King's School – Woolsey Stadium
April 2008	Ballard High School Athletic Field Renovation
October 2008	Rainier Vista Boys & Girls Club Field Renovation
May 2009	Grasslawn Park
June 2010	Marysville Getchell HS New Athletic Field
April 2011	Lakes High School, Turf, Tack & Tennis Project
May 2012	Centennial Middle School Track & Field Upgrades
June 2012	Lummi High School Track & Field Renovation
July 2012	University of Washington Bothell Recreation Field Development
January 2013	Big Finn Hill Park renovation
April 2013	University of Washington stadium field construction
January 2014	University of Washington Baseball field construction
April 2014	Jennie Hanson Park Soccer Fields, Snoqualmie, WA
May 2014	Rogers practice Field, WSU
June 2014	Martin Stadium, WSU
July 2014	Arlington HS synthetic turf renovation
August 2014	Fife HS synthetic turf renovation

.

Greg Hull

1533 E. Royal Palm Rd, Phoenix AZ 85020
Cell: 602-421-5722 - ghull@beynonsports.com

Summary

A long history of involvement in all aspects of the design, construction and utilization of track and field facilities. This work has been done in conjunction with a 40 year history of coaching in track and field at all levels including high school, university and international competitions. This combination of experience allows a unique perspective and understanding of the needs involved in all phases of facility planning and construction for high level track and field facilities.

Accomplishments

Lead designer and consultant on multiple university level track and field facility projects including complete involvement from concept through completion

Personal coach of multiple olympic and world class athletes including an olympic champion, two world record holders and 6 different national record holders in the pole vault.

Manager of a construction equipment company in the metropolitan Phoenix, AZ area with oversight of multiple salesman, a full service equipment and parts department.

Experience

Collegiate Sales Director
July 2010 to Current
Beynon Sports — Fresno, CA
Implemented and continuing to develop closer relationships between University and College coaches and Beynon Sports with an emphasis on the West Coast.

Department manager
July 2004 to July 2010
MF Athletic — Providence, RI
Implemented and oversaw the creation of a facility design and consulting division for the largest distributor of track and field equipment in the country.

Principal
July 1997 to July 2004
Southwest Consultants — Phoenix, AZ
Developed in conjunction with a local civil engineering firm a consulting service for schools designing new or overhauling existing track and field and other outdoor sports related facilities. Projects ran from the high school to university level projects.

General Manager
June 1980 to May 1989
Tolby Equipment — Glendale, AZ

Education

Bachelor of Arts : **Education**, 1975
Arizona State University — Tempe, AZ, USA

GEOFF DALEY, CTB

2423 Old Robin Hood
Havre De Grace, MD 21078

Phone (410) 262-9473
Cell (410) 262-1986
Fax (410) 771-9479

SUMMARY OF QUALIFICATIONS

More than 20 years experience; both installing and managing the installation of world class level running tracks; in the U.S.A. and internationally. Projects include the 1990 and 1998 Goodwill Games, the 1994 Commonwealth Games, and the U.S. Olympic Training Center in San Diego; along with many NCAA tracks including IAAF Certified Class I facilities at the University of Oregon and Auburn University. Geoff has extensive international track installation and management experience having worked on projects in Bermuda, the Bahamas, Guam, Malaysia, the Philippines and India, and several other countries.

EMPLOYMENT HISTORY

Director of Quality Assurance/ Chief Estimator
Beynon Sports Surfaces, Inc. — June 2003 – Present, Hunt Valley, MD

Polyurethane Track Project Manager
Southwest Recreational Industries, Inc. — 1999 - 2003, West Berlin, NJ

Polyurethane Track Installation Supervisor
Martin Surfacing, Inc. — 1988 – 1999, Hunt Valley, MD

ACCREDITATIONS

Certified Public Accountant (CPA), State of Massachusetts 1986

Certified Track Builder (CTB), 2005

EDUCATION

Williams College, Williamstown, MA — Bachelor of Arts, Economics, 1978

Northeastern University, Boston, MA — Master of Science, Accounting, 1983

INSTALLATION REFERENCES

- 2011 University of Oregon, Hayward Field, Eugene, OR
- 2010 Boston University Track & Tennis Center, Boston, MA
- 2009 Mount Saint Mary's University - Emmittsburg, MD
- 2009 George Mason University - Fairfax, VA
- 2008 United States Naval Hospital - Agana Heights, Guam
- 2007 University of Chicago - Chicago, IL
- 2006 United States Coast Guard Academy - New London, CT
- 2005 United States Military Academy - West Point, NY
- 2005 Thomas A. Robinson National Stadium - Nassau, Bahamas

- 2005 Auburn University - Auburn, AL
- 2004, 2007 University of Oregon-Haywood Field - Eugene, OR
- 2003 University of North Carolina @ Chapel Hill - Chapel Hill, NC
- 1999 Bermuda National Training Center-Hamilton Beach, Bermuda
- 1998 Goodwill Games-Mitchell Park-Nassau, NY
- 1994 US Olympic Training Center-San Diego, CA
- 1994 Commonwealth Games-University of Victoria, BC
- 1990 Goodwill Games-Huskey Stadium-University of Washington

ADDITIONAL REFERENCES AVAILABLE ON REQUEST

CTB
CERTIFIED TRACK BUILDER
ASBA

AMERICAN SPORTS BUILDERS ASSOCIATION

Through Its Certification Board

Has Conferred Upon

Todd Grimes

The Designation

CERTIFIED TRACK BUILDER

AMERICAN SPORTS BUILDERS ASSOCIATION
CORPORATE SEAL
1965
DELAWARE

FOR EFFORTS TO RAISE THE PROFESSIONAL STANDARDS OF RUNNING TRACK CONSTRUCTION AND FOR HAVING SUCCESSFULLY FULFILLED THE CONDITIONS OF ELIGIBILITY AND PASSED THE REQUIRED EXAMINATION.

In witness whereof we have set our hands on
this 31st *day of* December, 2015

Certification valid for a period of 3 years.

Executive Vice President

Certification Chairman

Kevan Pipe

President, Kevan Pipe Football Consulting Inc. 2007 ongoing

Owner of personal football management consulting company

THE CANADIAN SOCCER ASSOCIATION 1985 - 2006
Chief Operating Officer/General Secretary

After a 21 year career as head of Soccer in Canada and multiple international roles and activities in soccer, I set up my consulting company, Kevan Pipe Football Consulting Inc.

Since 2007, in addition to having consulted with FIFA from 2008-16, my primary client has been FieldTurf Tarkett, Canada's most successful artificial turf company.
Over the past dozen years, have assisted in the marketing/sales as well as project planning and implementation of approximately 100 FieldTurf field installations across Canada, including 70+ across Alberta, Saskatchewan and Manitoba.

Primary client references:

12 Sample Alberta/Saskatchewan/Manitoba References

1. ***City of Cold Lake Energy*** Centre – Cold Lake, AB. 97,000 sq ft football/soccer field installed October 2018 – Revolution 360 with cryo rubber elite infill. Glenn Barnes, General Manager of Community Services, City of Cold Lake, Ph: 780-594-4494 Ext. 7953 gbarnes@coldlake.com

2. ***Bonnyville Walsh Field at Notre Dame Elementary School***. 117,000 sq. ft Revolution 360 field with cryo rubber elite infill, 2017. Mickey Fagnan, Project Manager, 780/826-4113 cabinetmen@mcsnet.ca

3. ***Shell Place, Fort McMurray***. 3 FieldTurf fields (total 320,000 sq ft) installed 2014 with elite cryo rubber infill. Michael Bell, Supervisor, Sportsfields, Regional Recreation Corporation of Wood Buffalo. P: 780-791-0070, ext. 5122, C: 780-804-0334, Michael.bell@rrcwb.ca

4. ***Gordie Howe Sports Complex, Saskatoon***. 145,000 sq ft outdoor field installed in 2014 and indoor centre field (60,000 sq ft) in 2018. Another outdoor FieldTurf CORE field to be installed in 2019 (122,000 sq ft) and another baseball field (60,000 sq ft), all

with elite cryo rubber infill. Johnny Marciniuk, Gordie Howe Operations Manager. 306/227-7767 operations@howesports.ca

5. ***City of Calgary – Shouldice Park***, 3 fields installed in 2009, replaced due to Calgary Flood of 2013 (in 2016/17). Each Field was approximately 110,000 sq ft with FieldTurf Revolution 360 with elite cryo rubber infill, with each field **laid on Beynon 25 mm E-layer (same as Bold Center)** Laurie Darvill Superintendent, Calgary Recreation - North & West Region (403) 268-4586 Laurie.Darvill@calgary.ca

6. ***McMahon Stadium Society – University of Calgary***. CFL Stadium on Campus, installed 2014. FieldTurf Revolution with elite cryo rubber infill. 117,000 sq ft John Haverstock, CEO, johnhaverstock@shaw.ca

7. ***Cochrane, AB – Bow Valley High School*** multi-sport field installed 2016. FieldTurf Revolution with elite cryo rubber infill. 100,000 sq ft. Cam Cote, Project leader 2016 field camcote@shaw.ca 403 660-2936

8. Dakota Collegiate High School football/soccer field installed 2017. FieldTurf Revolution 360 with elite cryo rubber infill. 97,000 sq ft. VP Rob Mager 204/256-4366 robbie.mager@lrsd.net

9. Mosaic Stadium, Regina CFL stadium for football/soccer installed 2017. FieldTurf Revolution 360 with elite cryo rubber infill, 110,000 sq ft. Paul Hoffart, 306/777-7917 PHOFFART@regina.ca

10. University of Regina for football/soccer, installed 2017. 120,000 sq ft. FieldTurf Revolution 360 with elite cryo rubber. Trevor Rennick 306/337-2964 Trevor.Rennick@uregina.ca

11. Edmonton Scottish Soccer Society soccer complex completed in 2018, 135,000 sq ft FieldTurf CORE field with elite cryo rubber. Antony Bent, GM. 780/263-447

12. Calgary Foothills Soccer Centre 84,000 sq ft field installed in 2016 FieldTurf Revolution 360 elite cryo rubber. Colin McKay GM, socceroperations@calgaryfoothillssoccer.com 403/225.9388

Frederick A. Ballard II, P.E.

Director of Civil Engineering, North America

Education

Clarkson University/B.S. Engineering Management/1987
Syracuse University, NY/M.S. Civil Engineering/1994

Professional Registration and Activities

Licensed Professional Engineer/TX
Certified General Contractor/FL
KA Dual Engineering Contractor/AZ
Certified Erosion Control Inspector/GA/SC
Certified Level II Design Professional/GA
Certified Professional – Erosion and Sediment Control
QSD/QSP State of California

Mr. Ballard is the Director of Civil Engineering for FieldTurf USA, Inc. Mr. Ballard has over 30 years of experience in the design and construction of Natural Grass and Synthetic Turf Sports Facilities. His knowledge and commitment to this unique field, has allowed FieldTurf USA, Inc. to continue as a leader in the Sports Facility Design and Construction industry. Representative project experience includes:

- ***Texas State University Baseball & Softball Stadium Fields, San Marcos, TX, Design, Permitting, & QC***
- ***University of Texas Softball Stadium, Austin, TX, Design, Permitting, & QC***
- ***University of Notre Dame – Labar Football Complex, Fields 2 & 3, South Bend, IN, Design & QC***
- ***Ft. Bliss Stout Field, El Paso, TX, Design & QC***
- ***Elon University Football Complex, Elon, NC, Design, Permitting, & QC***
- ***Gulfport Baseball Complex, Gulfport, MS, Design & QC***
- ***Daytona Beach Municipal Stadium, Daytona Beach, FL, Design, Permitting, and QC***
- ***Greeley West Track and Field, Greeley, CO, Design, Permitting, and QC***
- ***Mercedes Benz Stadium, Atlanta, GA, Design Assist***
- ***NEISD (8 Fields), San Antonio, TX, Design and QC***
- ***University of Texas Permian Basin, Midland, TX, Design, Permitting, and QC***
- ***Huntington Beach USD (4 Fields), Huntington Beach, CA, Design***
- ***Rocky Mountain College, Billings, MT, Design and Permitting***
- ***Village Green Park, Greenwood Village, CO, Design and Permitting***
- ***Labar Football Practice Facility, University of Notre Dame, Notre Dame, IN, Design***
- ***Golden West College, Huntington Beach, CA, Design and Permitting***
- ***Western Michigan Baseball Stadium, Kalamazoo, MI, Design and Permitting***
- ***Lenoir Rhyne University, Moretz Stadium, Hickory, NC, Design and Permitting***
- ***University of North Georgia Soccer, Baseball, Softball, Dahlonega, GA, Design and Permitting***
- ***CEJU Belam Brazil FIFA Complex, Belam, Brazil, Design***
- ***Bonita Creek Park, Newport Beach, CA, Design Assist***
- ***UNC Wilmington Softball, Design and Construction***
- ***Regina City Stadium (Saskatchewan Rough Riders), Regina, SK, Design Assist***

- ***Armbrister Park, Miami, Florida, Design and Permitting***
- ***City of Tamarac, Tamarac, Florida, Design and Permitting***
- ***Allen Station Baseball Complex, Allen, Texas, Design and Permitting***
- ***Hyde Park High School Baseball, Austin, Texas, Design and Permitting***
- ***Anderson Park, City of Atlanta Parks, Atlanta, GA, Design and Construction***
- ***Ben Hill Park, City of Atlanta Parks, Atlanta, GA, Design and Construction***
- ***University of Notre Dame, Eck Baseball Stadium, South Bend, IN, Design and Construction***
- ***Winnipeg Blue Bombers Stadium, Winnipeg, MB, Design and Construction***
- ***McDonald Island Park, Ft. McMurray, AB, Design and Construction***

CHUBB

Surety
202B Halls Mill Road, PO Box 1650
Whitehouse Station, NJ 08889-1650

O + 908.903.3485
F + 908.903.3656

Federal Insurance Company

AIA Document A312™ - 2010 Performance Bond

Bond No. SAMPLE

Any singular reference to Contractor, Surety, Owner or other party shall be considered plural where applicable.

CONTRACTOR
(Name, legal status and address):
Fieldturf USA, Inc.
7445 Cote-de-Liesse Road, Suite 200
Montreal, QC H4T 1G2

OWNER
(Name, legal status and address):

SURETY *(Name and Principal Place of Business):*
Federal Insurance Company
202B Hall's Mill Road
Whitehouse Station, NJ 08889

The liability of the surety under this bond shall not extend beyond one year from the final completion and acceptance of the work by the owner/obligee and in no way shall the surety be liable under any extended warranty provided by Fieldturf USA, Inc. or the named Principal on this bond.

CONSTRUCTION CONTRACT
Date:
Amount:
Description *(Name and Location):*

BOND
Date (Not earlier than Construction Contract Date):
Amount:
Modifications to this Bond:

☒ None ☐ See Page 4

CONTRACTORS AS PRINCIPAL
Company: *(Corporate Seal)*
Fieldturf USA, Inc.

Signature: _____
Name and Title:

SURETY
Company: *(Corporate Seal)*
Federal Insurance Company

Signature: _____
Attorney-in-Fact Name: Jeffrey M. Wilson

Signed and Sealed this day of
(Any additional signatures appear on the last page of this Performance Bond.)

(FOR INFORMATION ONLY — Name, Address and Telephone)

AGENT or BROKER:
McGriff, a Marsh & McLennan Agency LLC Company
2000 International Park Dr., Suite 600
Birmingham, AL 35243
205-252-9871

OWNER'S REPRESENTATIVE *(Architect, Engineer or other party):*

SAMPLE

Printed in cooperation with the American Institute of Architects (AIA) by Chubb. The language in this document conforms to the language used in ***AIA Document A312 ™ - 2010.***

Form 15-02-0573-FED (Rev. 11/16)

1. The Contractor and the Surety, jointly and severally, bind themselves, their heirs, executors, administrators, successors and assigns to the Owner for the performance of the Construction Contract, which is incorporated herein by reference.
2. If the Contractor performs the Construction Contract, the Surety and the Contractor shall have no obligation under this Bond, except when applicable to participate in a conference as provided in Section 3.
3. If there is no Owner Default under the Construction Contract, the Surety's obligation under this Bond shall arise after:
   .1 the Owner first provides notice to the Contractor and the Surety that the Owner is considering declaring a Contractor Default. Such notice shall indicate whether the Owner is requesting a conference among the Owner, Contractor and Surety to discuss the Contractor's performance. If the Owner does not request a conference, the Surety may, within five (5) business days after receipt of the Owner's notice, request such a conference. If the Surety timely requests a conference, the Owner shall attend. Unless the Owner agrees otherwise, any conference requested under this Section 3.1 shall be held within ten (10) business days of the Surety's receipt of the Owner's notice. If the Owner, the Contractor and the Surety agree, the Contractor shall be allowed a reasonable time to perform the Construction Contract, but such an agreement shall not waive the Owner's right, if any, subsequently to declare a Contractor Default;
   .2 the Owner declares a Contractor Default, terminates the Construction Contract and notifies the Surety; and
   .3 the Owner has agreed to pay the Balance of the Contract Price in accordance with the terms of the Construction Contract to the Surety or to a contractor selected to perform the Construction Contract.
4. Failure on the part of the Owner to comply with the notice requirement in Section 3.1 shall not constitute a failure to comply with a condition precedent to the Surety's obligations, or release the Surety from its obligations, except to the extent the Surety demonstrates actual prejudice.
5. When the Owner has satisfied the conditions of Section 3, the Surety shall promptly and at the Surety's expense take one of the following actions:

5.1 Arrange for the Contractor, with consent of the Owner, to perform and complete the Construction Contract;

5.2 Undertake to perform and complete the Construction Contract itself, through its agents or independent contractors;

5.3 Obtain bids or negotiated proposals from qualified contractors acceptable to the Owner for a contract for performance and completion of the Construction Contract, arrange for a contract to be prepared for execution by the Owner and a contractor selected with the Owner's concurrence, to be secured with performance and payment bonds executed by a qualified surety equivalent to the bonds issued on the Construction Contract, and pay to the Owner the amount of damages as described in Section 7 in excess of the Balance of the Contract Price incurred by the Owner as a result of Contractor Default; or

5.4 Waive its right to perform and complete, arrange for completion, or obtain a new contractor and with reasonable promptness under the circumstances:
   .1 After investigation, determine the amount for which it may be liable to the Owner and, as soon as practicable after the amount is determined, make payment to the Owner; or
   .2 Deny liability in whole or in part and notify the Owner, citing the reasons for denial.

6. If the Surety does not proceed as provided in Section 5 with reasonable promptness, the Surety shall be deemed to be in default on this Bond seven days after receipt of an additional written notice from the Owner to the Surety demanding that the Surety perform its obligations under this Bond, and the Owner shall be entitled to enforce any remedy available to the Owner. If the Surety proceeds as provided in Section 5.4, and the Owner refuses the payment or the Surety has denied liability, in whole or in part, without further notice the Owner shall be entitled to enforce any remedy available to the Owner.

SAMPLE

7. If the Surety elects to act under Section 5.1, 5.2 or 5.3, then the responsibilities of the Surety to the Owner shall not be greater than those of the Contractor under the Construction Contract, and the responsibilities of the Owner to the Surety shall not be greater than those of the Owner under the Construction Contract. Subject to commitment by the Owner to pay the Balance of the Contract Price, the Surety Is obligated, without duplication, for
   .1 the responsibilities of the Contractor for correction of defective work and completion of the Construction Contract;
   .2 additional legal, design professional and delay costs resulting from the Contractor's Default, and resulting from the actions or failure to act of the Surety under Section 5; and
   .3 liquidated damages, or if no liquidated damages are specified in the Construction Contract, actual damages caused by delayed performance or non-performance of the Contractor.
8. If the Surety elects to act under Section 5.1, 5.3 or 5.4, the Surety's liability is limited to the amount of this Bond.
9. The Surety shall not be liable to the Owner or others for obligations of the Contractor that are unrelated to the Construction Contract, and the Balance of the Contract Price shall not be reduced or set off on account of any such unrelated obligations. No right of action shall accrue on this Bond to any person or entity other than the Owner or its heirs, executors, administrators successors and assigns.
10. The surety hereby waives notice of any change, including changes of time, to the Construction Contract or to related subcontracts, purchase orders and other obligations.
11. Any proceeding, legal or equitable, under this Bond may be instituted in any court of competent jurisdiction in the location in which the work or part of the work is located and shall be instituted within two years after a declaration of Contractor Default or within two years after the Contractor ceased working or within two years after the Surety refuses or fails to perform its obligations under this Bond, whichever occurs first. If the provisions of this Paragraph are void or prohibited by law, the minimum period of limitation available to sureties as a defense in the jurisdiction of the suit shall be applicable.
12. Notice to the Surety, the Owner or the Contractor shall be mailed or delivered to the address shown on the page on which their signature appears.
13. When this Bond has been furnished to comply with a statutory or other legal requirement in the location where the construction was to be performed, any provision in this Bond conflicting with said statutory or legal requirement shall be deemed deleted herefrom and provisions conforming to such statutory or other legal requirements shall be deemed incorporated herein. When so furnished, the intent is that this Bond shall be construed as a statutory bond and not as a common law bond.
14. **DEFINITIONS**

14.1 **Balance of the Contract Price:** The total amount payable by the Owner to the Contractor under the Construction Contract after all proper adjustments have been made, including allowance to the Contractor of any amounts received or to be received by the Owner in settlement of insurance or other claims for damages to which the Contractor is entitled, reduced by all valid and proper payments made to or on behalf of the Contractor under the Construction Contract.

14.2 **Construction Contract:** The agreement between the Owner and the Contractor identified on the cover page, including all Contract Documents and changes made to the agreement and the Contract Documents.

14.3 **Contractor Default:** Failure of the Contractor, which has not been remedied nor waived, to perform or otherwise to comply with the term of the Construction Contract.

14.4 **Owner Default:** Failure of the Owner, which has not been remedied or waived, to pay the Contractor as required under the Construction Contract or to perform and complete or comply with the other material terms of the Construction Contract.

14.5. **Contract Documents:** All the documents that comprise the agreement between the Owner and Contractor.

15. If this Bond is issued for an agreement between a Contractor and subcontractor, the term Contractor in this Bond shall be deemed to be Subcontractor and the term Owner shall be deemed to be Contractor.

SAMPLE

16 MODIFICATIONS TO THIS BOND ARE AS FOLLOWS:

SAMPLE

(Space is provided below for additional signatures of added parties, other than those appearing on the cover page.)

CONTRACTOR AS PRINCIPAL
Company: *(Corporate Seal)*

Signature:_____

Name and Title:

Address:

SURETY
Company: *(Corporate Seal)*
Federal Insurance Company

Signature:_____

Name and Title:

Address:

Printed in cooperation with the American Institute of Architects (AIA) by Chubb. The language in this document conforms to the language used in ***AIA Document A312 ™ - 2010.***

CHUBB

Power of Attorney

Federal Insurance Company | Vigilant Insurance Company | Pacific Indemnity Company
Westchester Fire Insurance Company | ACE American Insurance Company

Know All by These Presents, that **FEDERAL INSURANCE COMPANY**, an Indiana corporation, **VIGILANT INSURANCE COMPANY**, a New York corporation, **PACIFIC INDEMNITY COMPANY**, a Wisconsin corporation, **WESTCHESTER FIRE INSURANCE COMPANY** and **ACE AMERICAN INSURANCE COMPANY** corporations of the Commonwealth of Pennsylvania, do each hereby constitute and appoint Anna Childress, Mark W. Edwards II, Alisa B. Ferris, Robert R. Freel, Richard H. Mitchell, William M. Smith and Jeffrey M. Wilson of Birmingham, Alabama; Robert Read Davis of Atlanta, Georgia; Richard E. Daniels of Pensacola, Florida and Robert M. Verdin of Metairie, Louisiana ----------

each as their true and lawful Attorney-in-Fact to execute under such designation in their names and to affix their corporate seals to and deliver for and on their behalf as surety thereon or otherwise, bonds and undertakings and other writings obligatory in the nature thereof (other than bail bonds) given or executed in the course of business, and any instruments amending or altering the same, and consents to the modification or alteration of any instrument referred to in said bonds or obligations.

In Witness Whereof, said **FEDERAL INSURANCE COMPANY, VIGILANT INSURANCE COMPANY, PACIFIC INDEMNITY COMPANY, WESTCHESTER FIRE INSURANCE COMPANY** and **ACE AMERICAN INSURANCE COMPANY** have each executed and attested these presents and affixed their corporate seals on this **27th** day of **April, 2021.**

Dawn M. Chloros, Assistant Secretary

Stephen M. Haney, Vice President

STATE OF NEW JERSEY
County of Hunterdon SS.

On this **27th** day of **April, 2021** before me, a Notary Public of New Jersey, personally came Dawn M. Chloros and Stephen M. Haney, to me known to be Assistant Secretary and Vice President, respectively, of FEDERAL INSURANCE COMPANY, VIGILANT INSURANCE COMPANY, PACIFIC INDEMNITY COMPANY, WESTCHESTER FIRE INSURANCE COMPANY and ACE AMERICAN INSURANCE COMPANY, the companies which executed the foregoing Power of Attorney, and the said Dawn M. Chloros and Stephen M. Haney, being by me duly sworn, severally and each for herself and himself did depose and say that they are Assistant Secretary and Vice President, respectively, of FEDERAL INSURANCE COMPANY, VIGILANT INSURANCE COMPANY, PACIFIC INDEMNITY COMPANY, WESTCHESTER FIRE INSURANCE COMPANY and ACE AMERICAN INSURANCE COMPANY and know the corporate seals thereof, that the seals affixed to the foregoing Power of Attorney are such corporate seals and were thereto affixed by authority of said Companies; and that their signatures as such officers were duly affixed and subscribed by like authority.

Notarial Seal

KATHERINE J. ADELAAR
NOTARY PUBLIC OF NEW JERSEY
No. 2316685
Commission Expires July 16, 2024

Notary Public

CERTIFICATION

Resolutions adopted by the Boards of Directors of FEDERAL INSURANCE COMPANY, VIGILANT INSURANCE COMPANY, and PACIFIC INDEMNITY COMPANY on August 30, 2016; WESTCHESTER FIRE INSURANCE COMPANY on December 11, 2006; and ACE AMERICAN INSURANCE COMPANY on March 20, 2009:

"RESOLVED, that the following authorizations relate to the execution, for and on behalf of the Company, of bonds, undertakings, recognizances, contracts and other written commitments of the Company entered into in the ordinary course of business (each a "Written Commitment"):

(1) Each of the Chairman, the President and the Vice Presidents of the Company is hereby authorized to execute any Written Commitment for and on behalf of the Company, under the seal of the Company or otherwise.

(2) Each duly appointed attorney-in-fact of the Company is hereby authorized to execute any Written Commitment for and on behalf of the Company, under the seal of the Company or otherwise, to the extent that such action is authorized by the grant of powers provided for in such person's written appointment as such attorney-in-fact.

(3) Each of the Chairman, the President and the Vice Presidents of the Company is hereby authorized, for and on behalf of the Company, to appoint in writing any person the attorney-in-fact of the Company with full power and authority to execute, for and on behalf of the Company, under the seal of the Company or otherwise, such Written Commitments of the Company as may be specified in such written appointment, which specification may be by general type or class of Written Commitments or by specification of one or more particular Written Commitments.

(4) Each of the Chairman, the President and the Vice Presidents of the Company is hereby authorized, for and on behalf of the Company, to delegate in writing to any other officer of the Company the authority to execute, for and on behalf of the Company, under the Company's seal or otherwise, such Written Commitments of the Company as are specified in such written delegation, which specification may be by general type or class of Written Commitments or by specification of one or more particular Written Commitments.

(5) The signature of any officer or other person executing any Written Commitment or appointment or delegation pursuant to this Resolution, and the seal of the Company, may be affixed by facsimile on such Written Commitment or written appointment or delegation.

FURTHER RESOLVED, that the foregoing Resolution shall not be deemed to be an exclusive statement of the powers and authority of officers, employees and other persons to act for and on behalf of the Company, and such Resolution shall not limit or otherwise affect the exercise of any such power or authority otherwise validly granted or vested."

I, Dawn M. Chloros, Assistant Secretary of FEDERAL INSURANCE COMPANY, VIGILANT INSURANCE COMPANY, PACIFIC INDEMNITY COMPANY, WESTCHESTER FIRE INSURANCE COMPANY and ACE AMERICAN INSURANCE COMPANY (the "Companies") do hereby certify that

(i) the foregoing Resolutions adopted by the Board of Directors of the Companies are true, correct and in full force and effect,
(ii) the foregoing Power of Attorney is true, correct and in full force and effect.

Given under my hand and seals of said Companies at Whitehouse Station, NJ, this

Dawn M. Chloros, Assistant Secretary

IN THE EVENT YOU WISH TO VERIFY THE AUTHENTICITY OF THIS BOND OR NOTIFY US OF ANY OTHER MATTER, PLEASE CONTACT US AT:
Telephone (908) 903-3493 Fax (908) 903-3656 e-mail: surety@chubb.com

SAMPLE

CHUBB

Surety
202B Halls Mill Road, PO Box 1650
Whitehouse Station, NJ 08889-1650

O + 908.903.3485
F + 908.903.3656

Federal Insurance Company

AIA Document A312™ - 2010 Payment Bond

Bond No. SAMPLE

Any singular reference to Contractor, Surety, Owner or other party shall be considered plural where applicable.

CONTRACTOR
(Name, legal status and address):
Fieldturf USA, Inc.
7445 Cote-de-Liesse Road, Suite 200
Montreal, QC H4T 1G2

OWNER
(Name, legal status and address):

SURETY
(Name, legal status and principal place of business):
Federal Insurance Company
202B Hall's Mill Road
Whitehouse Station, NJ 08889

The liability of the surety under this bond shall not extend beyond one year from the final completion and acceptance of the work by the owner/obligee and in no way shall the surety be liable under any extended warranty provided by Fieldturf USA, Inc. or the named Principal on this bond.

CONSTRUCTION CONTRACT
Date:
Amount:
Description *(Name and Location)*:

BOND
Date *(Not earlier than Construction Contract Date)*:
Amount:
Modifications to this Bond:

☐ None ☒ See Page 4

CONTRACTORS AS PRINCIPAL
Company: *(Corporate Seal)*
Fieldturf USA, Inc.

Signature: _____
Name and Title:

SURETY
Company: *(Corporate Seal)*
Federal Insurance Company

Signature: _____
Attorney-in-Fact Name: Jeffrey M. Wilson

Signed and Sealed this day of
(Any additional signatures appear on the last page of this Performance Bond.)

(FOR INFORMATION ONLY – Name, Address and Telephone)

AGENT or BROKER:
McGriff, a Marsh & McLennan Agency LLC Company
2000 International Park Dr., Suite 600
Birmingham, AL 35243
205-252-9871

OWNER'S REPRESENTATIVE *(Architect, Engineer or other party)*

SAMPLE

*Printed in cooperation with the American Institute of Architects (AIA) by Chubb. The language in this document conforms to the language used in **AIA Document A312 ™ - 2010.***

Form 15-02-0574-FED (Rev. 11/16)

1. The Contractor and the Surety, jointly and severally, bind themselves, their heirs, executors, administrators, successors and assigns to the Owner to pay for labor, materials and equipment furnished for use in the performance of the Construction Contract, which is incorporated herein by reference, subject to the following terms.

2. If the Contractor promptly makes payment of all sums due to Claimants, and defends, indemnifies and holds harmless the Owner from claims, demands, liens or suits by any person or entity seeking payment for labor, materials or equipment furnished for use in the performance of the Construction Contract, then the Surety and the Contractor shall have no obligation under this Bond.

3. If there is no Owner Default under the Construction Contract, the Surety's obligation to the Owner under this Bond shall arise after the Owner has promptly notified the Contractor and the Surety (at the address described in Section 13) of claims, demands, liens or suits against the Owner or the Owner's property by any person or entity seeking payment for labor, materials or equipment furnished for use in the performance of the Construction Contract and tendered defense of such claims, demands, liens or suits to the Contractor and the Surety.

4. When the Owner has satisfied the conditions in Section 3, the Surety shall promptly and at the Surety's expense defend, indemnify and hold harmless the Owner against a duly tendered claim, demand, lien or suit.

5. The Surety's obligations to a Claimant under this Bond shall arise after the following:

5.1 Claimants, who do not have a direct contract with the Contractor,

.1 have furnished a written notice of non-payment to the Contractor, stating with substantial accuracy the amount claimed and the name of the party to whom the materials were, or equipment was, furnished or supplied or for whom the labor was done or performed, within ninety (90) days after having last performed labor or last furnished materials or equipment included in the Claim; and

.2 have sent a Claim to the Surety (at the address described in Section 13).

5.2 Claimants, who are employed by or have a direct contract with the Contractor, have sent a Claim to the Surety (at the address described in Section 13).

6. If a notice of non-payment required by Section 5.1.1 is given by the Owner to the Contractor, that is sufficient to satisfy a Claimant's obligation to furnish a written notice of non-payment under Section 5.1.1.

7. When a Claimant has satisfied the conditions of Sections 5.1 or 5.2, whichever is applicable, the Surety shall promptly and at the Surety's expense take the following actions:

7.1 Send an answer to the Claimant, with a copy to the Owner, within sixty (60) days after receipt of the Claim, stating the amounts that are undisputed and the basis for challenging any amounts that are disputed; and

7.2 Pay or arrange for payment of any undisputed amounts.

7.3 The Surety's failure to discharge its obligations under Section 7.1 or Section 7.2 shall not be deemed to constitute a waiver of defenses the Surety or Contractor may have or acquire as to a Claim, except as to undisputed amounts for which the Surety and Claimant have reached agreement. If, however, the Surety fails to discharge its obligations under Section 7.1 or Section 7.2, the Surety shall indemnify the Claimant for the reasonable attorney's fees the Claimant incurs thereafter to recover any sums found to be due and owing the Claimant.

8. The Surety's total obligation shall not exceed the amount of this Bond, plus the amount of reasonable attorney's fees provided under Section 7.3, and the amount of this Bond shall be credited for any payments made in good faith by the Surety.

9. Amounts owed by the Owner to the Contractor under the Construction Contract shall be used for the performance of the Construction Contract and to satisfy claims, if any, under any construction performance bond. By the Contractor furnishing and the Owner accepting this Bond, they agree that all funds earned by the Contractor in the performance of the Construction Contract are dedicated to satisfy obligations of the Contractor and the Surety under this Bond, subject to the Owner's priority to use the funds for the completion of the work.

SAMPLE

10. The Surety shall not be liable to the Owner, Claimants or others for obligations of the Contractor that are unrelated to the Construction Contract. The Owner shall not be liable for the payment of any costs or expenses of any Claimant under this Bond, and shall have under this Bond no obligations to make payments to, or give notice on behalf of, Claimants or otherwise have any obligations to Claimants under this Bond.

11. The Surety hereby waives notice of any change, including changes of time, to the Construction Contract or to related subcontracts, purchase orders and other obligations.

12. No suit or action shall be commenced by a Claimant under this Bond other than in a court of competent jurisdiction in the state in which the project that is subject of the Construction Contract is located or after the expiration of one year from the date (1) on which the Claimant sent a Claim to the Surety pursuant to Section 5.1.2 or 5.2, or (2) on which the last labor or service was performed by anyone or the last materials or equipment were furnished by anyone under the Construction Contract, whichever of (1) or (2) first occurs. If the provisions of this Paragraph are void or prohibited by law, the minimum period of limitation available to sureties as a defense in the jurisdiction of the suit shall be applicable.

13. Notice and Claims to the Surety, the Owner or the Contractor shall be mailed or delivered to the address shown on the page which their signature appears. Actual receipt of notice or Claims, however accomplished, shall be sufficient compliance as of the date received.

14. When this Bond has been furnished to comply with a statutory or other legal requirement in the location where the construction was to be performed, any provision in this Bond conflicting with said statutory or legal requirement shall be deemed deleted herefrom and provisions conforming to such statutory or other legal requirement shall be deemed incorporated herein. When so furnished, the intent is that this Bond shall be construed as a statutory bond and not as a common law bond.

15. Upon request by any person or entity appearing to be a potential beneficiary of this Bond, the Contractor and Owner shall promptly furnish a copy of this Bond or shall permit a copy to be made.

16. DEFINITIONS

16.1 Claim. A written statement by the Claimant including at a minimum:

.1 the name of the Claimant;

.2 the name of the person for whom the labor was done, or materials or equipment furnished;

.3 a copy of the agreement or purchase order pursuant to which labor, materials or equipment was furnished for use in the performance of the Construction Contract;

.4 a brief description of the labor, materials or equipment furnished;

.5 the date on which the Claimant last performed labor or last furnished materials or equipment for use in the performance of the Construction Contract;

.6 the total amount earned by the Claimant for labor, materials or equipment furnished as of the date of the Claim;

.7 the total amount of previous payments received by the Claimant; and,

.8 the total amount due and unpaid to the Claimant for labor, materials or equipment furnished as of the date of the Claim.

16.2 Claimant: An individual or entity having a direct contract with the Contractor or with a subcontractor of the Contractor to furnish labor, materials, or equipment for use in the performance of the Construction Contract. The term Claimant also includes any individual or entity that has rightfully asserted a claim under an applicable mechanic's lien or similar statute against the real property upon which the Project is located. The intent of this Bond shall be to include without limitation in the terms "labor, materials or equipment" that part of water, gas power, light, heat, oil gasoline, telephone service or rental equipment used in the Construction Contract, architectural and engineering services required for performance of the work of the Contractor

SAMPLE

and the Contractor's subcontractors, and all other items for which a mechanic's lien may be asserted in the jurisdiction where the labor, materials or equipment were furnished.

16.3 Construction Contract: The agreement between the Owner and the Contractor identified on the cover page, including all Contract Documents and all changes made to the agreement and the Contract Documents.

16.4 Owner Default: Failure of the Owner, which has neither been remedied nor waived, to pay the Contractor as required under the Construction Contract or to perform and complete or comply with the other material terms of the Construction Contract.

16.5 Contract Documents. All the documents that comprise the agreement between the Owner and Contractor.

17. If this Bond is issued for an agreement between a Contractor and subcontractor, the term Contractor in this Bond shall be deemed to be Subcontractor and the term Owner shall be deemed to be Contractor.

18. MODIFICATIONS TO THIS BOND ARE AS FOLLOWS:

18.1 "Claim notices for FEDERAL INSURANCE COMPANY must be sent to the following address: Chubb, PO Box 2191, Chesapeake, Virginia 23327, Attention: Surety Support Team."

SAMPLE

(Space is provided below for additional signatures of added parties, other than those appearing on the cover page.)

CONTRACTOR AS PRINCIPAL
Company: *(Corporate Seal)*

Signature: _____

Name and Title:

Address:

SURETY
Company: *(Corporate Seal)*
Federal Insurance Company

Signature: _____

Name and Title:

Address:

Printed in cooperation with the American Institute of Architects (AIA) by Chubb. The language in this document conforms to the language used in ***AIA Document A312 ™ - 2010.***

CHUBB

Power of Attorney

Federal Insurance Company | Vigilant Insurance Company | Pacific Indemnity Company
Westchester Fire Insurance Company | ACE American Insurance Company

Know All by These Presents, that **FEDERAL INSURANCE COMPANY**, an Indiana corporation, **VIGILANT INSURANCE COMPANY**, a New York corporation, **PACIFIC INDEMNITY COMPANY**, a Wisconsin corporation, **WESTCHESTER FIRE INSURANCE COMPANY** and **ACE AMERICAN INSURANCE COMPANY** corporations of the Commonwealth of Pennsylvania, do each hereby constitute and appoint Anna Childress, Mark W. Edwards II, Alisa B. Ferris, Robert R. Freel, Richard H. Mitchell, William M. Smith and Jeffrey M. Wilson of Birmingham, Alabama; Robert Read Davis of Atlanta, Georgia; Richard E. Daniels of Pensacola, Florida and Robert M. Verdin of Metairie, Louisiana ----------

each as their true and lawful Attorney-in-Fact to execute under such designation in their names and to affix their corporate seals to and deliver for and on their behalf as surety thereon or otherwise, bonds and undertakings and other writings obligatory in the nature thereof (other than bail bonds) given or executed in the course of business, and any instruments amending or altering the same, and consents to the modification or alteration of any instrument referred to in said bonds or obligations.

In Witness Whereof, said **FEDERAL INSURANCE COMPANY, VIGILANT INSURANCE COMPANY, PACIFIC INDEMNITY COMPANY, WESTCHESTER FIRE INSURANCE COMPANY** and **ACE AMERICAN INSURANCE COMPANY** have each executed and attested these presents and affixed their corporate seals on this **27th** day of **April, 2021.**

Dawn M. Chloros, Assistant Secretary

Stephen M. Haney, Vice President

STATE OF NEW JERSEY
County of Hunterdon SS.

On this **27th** day of **April, 2021** before me, a Notary Public of New Jersey, personally came Dawn M. Chloros and Stephen M. Haney, to me known to be Assistant Secretary and Vice President, respectively, of FEDERAL INSURANCE COMPANY, VIGILANT INSURANCE COMPANY, PACIFIC INDEMNITY COMPANY, WESTCHESTER FIRE INSURANCE COMPANY and ACE AMERICAN INSURANCE COMPANY, the companies which executed the foregoing Power of Attorney, and the said Dawn M. Chloros and Stephen M. Haney, being by me duly sworn, severally and each for herself and himself did depose and say that they are Assistant Secretary and Vice President, respectively, of FEDERAL INSURANCE COMPANY, VIGILANT INSURANCE COMPANY, PACIFIC INDEMNITY COMPANY, WESTCHESTER FIRE INSURANCE COMPANY and ACE AMERICAN INSURANCE COMPANY and know the corporate seals thereof, that the seals affixed to the foregoing Power of Attorney are such corporate seals and were thereto affixed by authority of said Companies; and that their signatures as such officers were duly affixed and subscribed by like authority.

Notarial Seal

KATHERINE J. ADELAAR
NOTARY PUBLIC OF NEW JERSEY
No. 2316685
Commission Expires July 16, 2024

Notary Public

CERTIFICATION

Resolutions adopted by the Boards of Directors of FEDERAL INSURANCE COMPANY, VIGILANT INSURANCE COMPANY, and PACIFIC INDEMNITY COMPANY on August 30, 2016; WESTCHESTER FIRE INSURANCE COMPANY on December 11, 2006; and ACE AMERICAN INSURANCE COMPANY on March 20, 2009:

"RESOLVED, that the following authorizations relate to the execution, for and on behalf of the Company, of bonds, undertakings, recognizances, contracts and other written commitments of the Company entered into in the ordinary course of business (each a "Written Commitment"):

(1) Each of the Chairman, the President and the Vice Presidents of the Company is hereby authorized to execute any Written Commitment for and on behalf of the Company, under the seal of the Company or otherwise.

(2) Each duly appointed attorney-in-fact of the Company is hereby authorized to execute any Written Commitment for and on behalf of the Company, under the seal of the Company or otherwise, to the extent that such action is authorized by the grant of powers provided for in such person's written appointment as such attorney-in-fact.

(3) Each of the Chairman, the President and the Vice Presidents of the Company is hereby authorized, for and on behalf of the Company, to appoint in writing any person the attorney-in-fact of the Company with full power and authority to execute, for and on behalf of the Company, under the seal of the Company or otherwise, such Written Commitments of the Company as may be specified in such written appointment, which specification may be by general type or class of Written Commitments or by specification of one or more particular Written Commitments.

(4) Each of the Chairman, the President and the Vice Presidents of the Company is hereby authorized, for and on behalf of the Company, to delegate in writing to any other officer of the Company the authority to execute, for and on behalf of the Company, under the Company's seal or otherwise, such Written Commitments of the Company as are specified in such written delegation, which specification may be by general type or class of Written Commitments or by specification of one or more particular Written Commitments.

(5) The signature of any officer or other person executing any Written Commitment or appointment or delegation pursuant to this Resolution, and the seal of the Company, may be affixed by facsimile on such Written Commitment or written appointment or delegation.

FURTHER RESOLVED, that the foregoing Resolution shall not be deemed to be an exclusive statement of the powers and authority of officers, employees and other persons to act for and on behalf of the Company, and such Resolution shall not limit or otherwise affect the exercise of any such power or authority otherwise validly granted or vested."

I, Dawn M. Chloros, Assistant Secretary of FEDERAL INSURANCE COMPANY, VIGILANT INSURANCE COMPANY, PACIFIC INDEMNITY COMPANY, WESTCHESTER FIRE INSURANCE COMPANY and ACE AMERICAN INSURANCE COMPANY (the "Companies") do hereby certify that

(i) the foregoing Resolutions adopted by the Board of Directors of the Companies are true, correct and in full force and effect,
(ii) the foregoing Power of Attorney is true, correct and in full force and effect.

Given under my hand and seals of said Companies at Whitehouse Station, NJ, this

Dawn M. Chloros, Assistant Secretary

IN THE EVENT YOU WISH TO VERIFY THE AUTHENTICITY OF THIS BOND OR NOTIFY US OF ANY OTHER MATTER, PLEASE CONTACT US AT:
Telephone (908) 903-3493 Fax (908) 903-3656 e-mail: surety@chubb.com

SAMPLE

CHUBB®

SURETY BOND CORPORATE SEAL NOTICE AND ADDENDUM

In an effort to facilitate the use of our respective corporate seals during the COVID-19 pandemic, FEDERAL INSURANCE COMPANY ("FEDERAL") has authorized its respective Attorneys-in-Fact to affix FEDERAL'S corporate seal to any surety bond executed on behalf of FEDERAL by any such Attorney-in-Fact by attaching this Notice and Addendum to said bond.

To the extent this Notice and Addendum is attached to a surety bond that is executed on behalf of FEDERAL by its Attorney-in-Fact, FEDERAL hereby agrees that the corporate seal below for FEDERAL shall be deemed affixed to said bond to the same extent as if its raised corporate seal was physically affixed to the face of the bond.

Dated this 30th day of March, 2020.

FEDERAL INSURANCE COMPANY

By: _____
Stephen M. Haney, Vice President

SAMPLE

150 Dascomb Road
Andover, MA 01810

978-623-9980
icpgroup.com

April 2025

To Whom It May Concern:

Beynon Sports/Fieldturf USA/Tarkett Sports is a certified dealer and applicator of Plexipave and all complementary products manufactured by California Sports Surfaces, a division of ICP Group. This includes, but is not limited to, Plexichrome Ultra Performance Color, Acrylic Resurfacer, Color Base, Court Patch Binder, Crack Filler, Ti-Coat Primer, Line Rite and Line Paint.

Please see attached certificate.

Dave Rosenthal
Regional Sales Manager
California Sports Surfaces
303-900-2479

2025
Authorized Applicator

Beynon Sports/Fieldturf USA/Tarkett Sports

This is to confirm that the above-named company is an Authorized Applicator of all brands of California Sports Surfaces, including Plexipave, DecoTurf, Premier Sports Coatings, Premier Court, Rebound Ace, CoolTop and Plexitrac. A select group of applicators have demonstrated the capability and the techniques to successfully install our athletic surfaces and California Sports Surfaces, a division of the ICP Group, fully supports their efforts with technical service and marketing assistance. This authorization is reviewed annually to ensure continued compliance with our standards. We are pleased to have this firm as a part of our network.

Tom Magner

Tom Magner
Director of Product Management - California Sports Surfaces

FieldTurf®
A Tarkett Sports Company

WORLD LEADER
IN ARTIFICIAL TURF

FIFA PREFERRED PROVIDER FOOTBALL TURF

PREFERRED SUPPLIER FIH QUALITY

PREFERRED TURF PRODUCER WORLD RUGBY

AFCA OFFICIAL TURF

NFCA OFFICIAL SPONSOR

NAIA OFFICIAL TURF PARTNER

HIGH SCHOOL BROYLES AWARD OFFICIAL SPONSOR

GOOD SPORTS® OFFICIAL SPONSOR

WHY FIELDTURF

VERTICALLY INTEGRATED

FieldTurf controls all aspects of the manufacturing value chain. From start to finish, we're in control of your field.

LEADING DURABILITY

Manufactured and installed with high attention to detail, FieldTurf systems showcase proven durability. There are over 2,000 FieldTurf fields still in use that are 8 or more years old.

FINANCIALLY STABLE

Part of Tarkett Sports, a division of the Tarkett Group, a worldwide leader of innovative flooring and sports surface solutions, FieldTurf has unprecedented financial support and stability. You can rest easy.

EXPERT INSTALLATION

FieldTurf has some of the most experienced and knowledgeable installation crews in the industry. The success of your field is heavily dependent on the quality of your installation crew.

EXPERIENCED

With over 25,000 installations worldwide, FieldTurf has been the surface of choice for the last 20+ years.

SERVICE

We are as committed to your program as you are; and we're with you for the long term. When you buy a field from FieldTurf, you're buying from a company that knows how to take care of you. It's what we do best.

ENDLESS PURSUIT OF INNOVATION

From the original 3-layer infill system to our SureLock coating drainage system to our game-changing CoolPlay system - our innovations continue to change the game.

PROVEN SAFETY

The findings of long-term independent research show that FieldTurf's heavyweight systems are safer than, or equal, to competitive systems and numerous published peer-reviewed studies show FieldTurf as safer than natural grass in the most critical areas of player safety.

FIND YOUR FIELDTURF EXPERT AT **FIELDTURF.COM** OR **800-724-2969**

TRUSTED AT EVERY LEVEL

PROFESSIONAL

COLLEGIATE

OVER 1500 INSTALLATIONS

HIGH SCHOOL & MUNICIPAL

OVER 6000 FACILITIES

WHICH SYSTEM IS RIGHT FOR YOU?

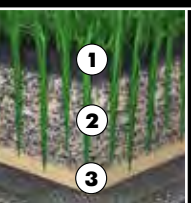

3-LAYER SYSTEM

One of the most intricate and meticulous infill systems available today. Designed to provide the best Gmax and energy restitution results, a 3-layer system provides athletes with improved safety and performance.

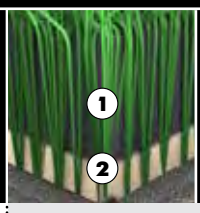

2-LAYER SYSTEM

This homogeneous infill system consists of a sand base with crumb rubber to provide the proper firmness required for optimal athletic performance while providing proper shock absorption.

CORE

Built from our 20+ years of industry-leading innovation and unmatched expertise, CORE, the first multi-layer dual-polymer fiber ever, rewrites the playbook for sports turf, reinvents the playing field and redefines the player experience.

Fiber	Multi-Layer Dual-Polymer Monofilament
Infill	3-layer
Backing	Finger-unit / SureLock

PRESTIGE XM

Our Prestige XM line offers proven success and best-in-class durability. Its ridged monofilament fiber technology provides a durable and resilient playing surface.

Fiber	Monofilament
Infill	2-layer
Backing	Solid Coated / Perforated

REVOLUTION 360

One of our most popular systems, Revolution 360 was named after the concept of completeness. The system features optimal durability, resilience and feel.

Fiber	Monofilament
Infill	3-layer
Backing	Finger-unit / SureLock

PRESTIGE VERTEX

FieldTurf Prestige Vertex features the same leading slit-film combination as Vertex Prime but designed in a two-layer system. A unique balance of quality and value. The system allows you to benefit from proper infill encapsulation and grass-like ball roll along with best-in-class performance characteristics.

Fiber	Hybrid - Monofilament & Slit-Film
Infill	2-layer
Backing	Solid Coated / Perforated

CLASSIC HD

Our leading slit-film fiber, Classic HD was carefully crafted to maximize durability and safety, as well as be aesthetically pleasing. Designed to deliver ultimate strength, the system is a perfect match for fields with high use. With less abrasion and splash than competitive systems, Classic HD is proven on the field and in the lab. As we say, it's a Beauty and a Beast.

Fiber	Slit-Film
Infill	3-layer
Backing	Finger-unit / SureLock

PRESTIGE XT

FieldTurf Prestige XT features the same leading slit-film as Classic HD, but designed in a two-layer system. A unique balance of quality and value. The system allows you to benefit from premier fiber performance along with best-in-class performance characteristics.

Fiber	Slit-Film
Infill	2-layer
Backing	Solid Coated / Perforated

VERTEX PRIME

FieldTurf Vertex Prime is comprised of specially designed slit-film fibers and high performance ridged monofilament fibers. The fibrillation process of the slit-film component allows for proper infill encapsulation while the monofilament fibers facilitate grass-like ball roll. Both fibers are tufted together in the same stitch for a superior aesthetic appearance.

Fiber	Hybrid - Monofilament & Slit-Film
Infill	3-layer
Backing	Finger-unit / SureLock

VINTAGE SERIES

Our Vintage Series features our highest quality slit-film fiber – the same fiber featured in our renowned Classic HD system – in a heavy and dense 2-layer pile. Our Vintage Series offers a soft, durable and low maintenance option.

Fiber	Slit-Film
Infill	2-layer
Backing	Solid Coated / Perforated

AT THE SURFACE OF THE BEST PROGRAMS IN THE WORLD

FOOTBALL

SOCCER

BASEBALL

SOFTBALL

LACROSSE

MULTI-SPORT

INDOOR

FIELD HOCKEY

RUGBY

PORTABLE

CHANGE THE GAME

THE TARKETT SPORTS FAMILY – LEADERS IN SPORTS SURFACING

FieldTurf® A Tarkett Sports Company | BEYNON® A Tarkett Sports Company | renner® A Tarkett Sports Company | Tarkett SPORTS CONSTRUCTION | Tarkett SPORTS INDOOR | FieldTurf® LANDSCAPE A Tarkett Sports Company | GRASSMASTER By Tarkett Sports

© Copyright 2022. FieldTurf USA, Inc. All Rights Reserved.

FieldTurf® A Tarkett Sports Company

800-724-2969 | info@fieldturf.com | fieldturf.com

FieldTurf®
A Tarkett Sports Company

YOUR TRUSTED PARTNER

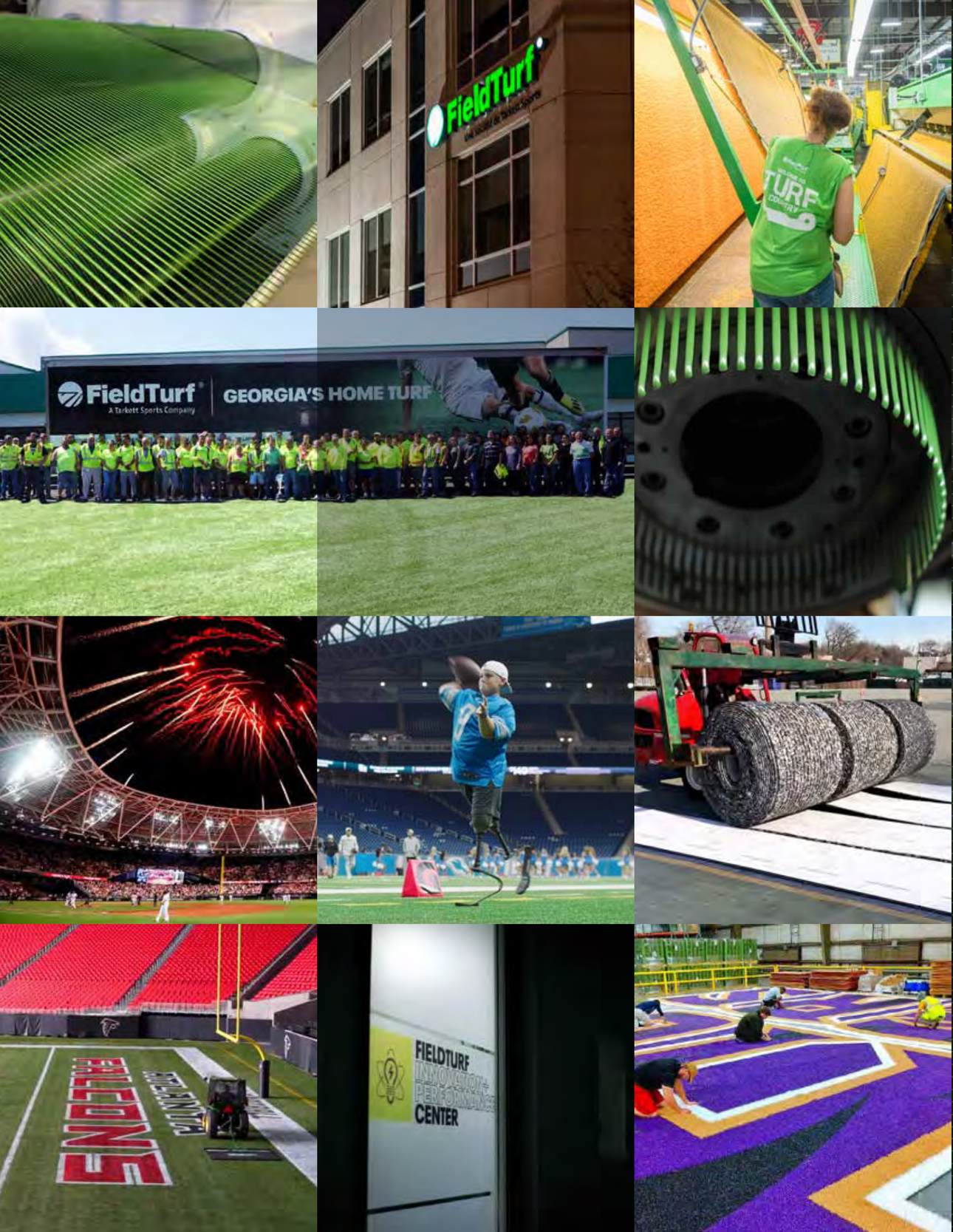

TOGETHER, WE CAN HELP PROTECT YOUR INVESTMENT

We've always done things differently: from our industry-leading innovations to our groundbreaking science on athlete safety and performance. Not all turf is created equal. You can see and feel the difference FieldTurf makes.

Long-term value is indispensable when investing in a new field. From surface performance to safety and long-term durability – your choice of system and supplier will have a major impact on your program.

YOUR ROADMAP TO A GREAT FIELD:

FOCUS ON TRUST AS YOU PARTNER FOR THE LONG-TERM

You'll be relying on your supplier for nearly a decade. Select one that you can trust and that will be reliable throughout the life of your field. Playing the long game always wins.

THE DETAILS YOU CAN'T SEE MATTER JUST AS MUCH

Go beyond first appearances and truly research your system and supplier. The design, manufacturing and installation of your field is an art. Don't settle.

SUCCESS LIES IN THE QUALITY OF THE INSTALLATION

Don't underestimate the value of an experienced installation crew. The success of your field greatly relies on their skill in execution.

ASK & VISIT

Do your homework! Ask for independent testing reports, speak to field owners and visit fields. You want to ensure that your supplier of choice has strong references.

FieldTurf®
A Tarkett Sports Company

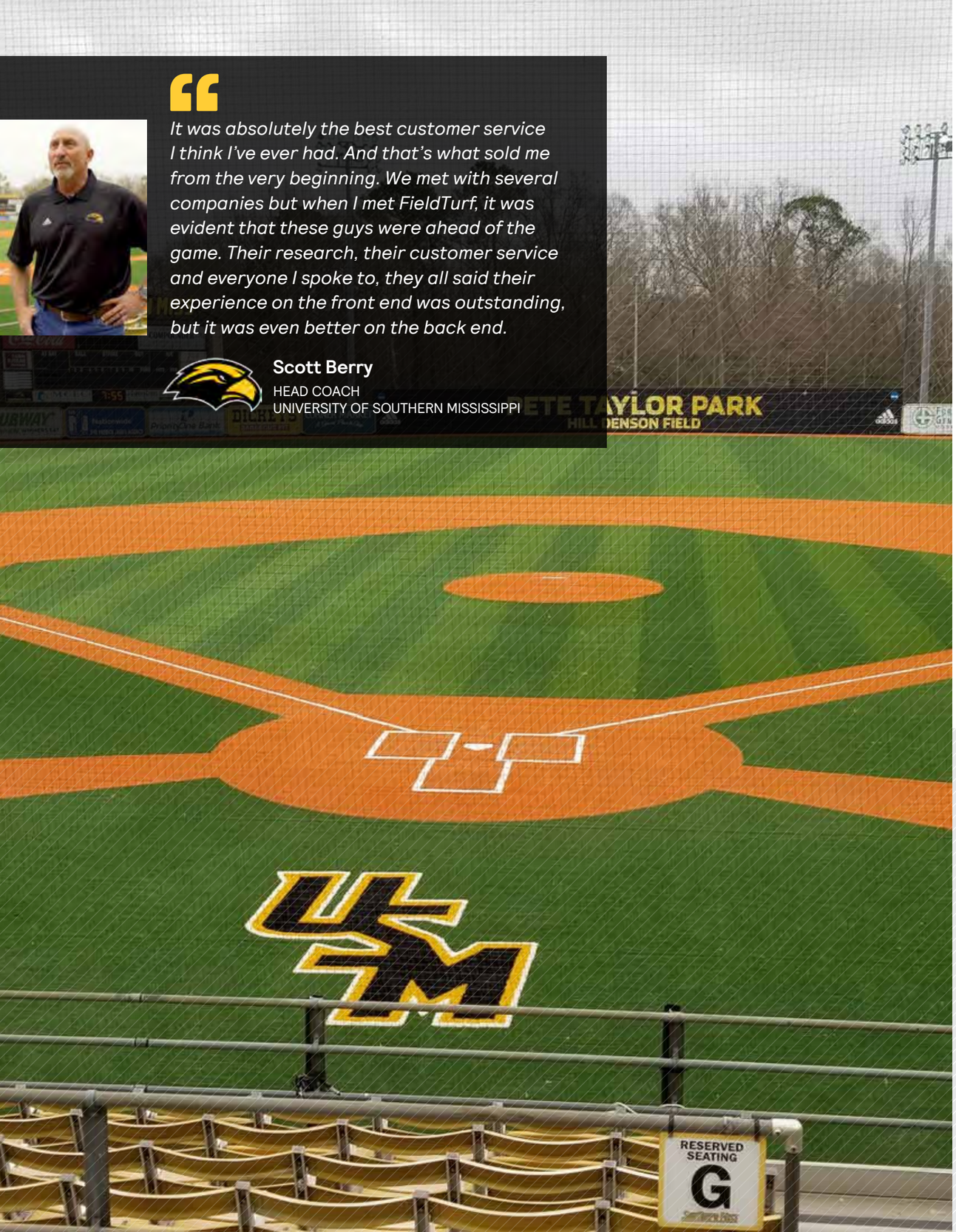

It was absolutely the best customer service I think I've ever had. And that's what sold me from the very beginning. We met with several companies but when I met FieldTurf, it was evident that these guys were ahead of the game. Their research, their customer service and everyone I spoke to, they all said their experience on the front end was outstanding, but it was even better on the back end.

Scott Berry
HEAD COACH
UNIVERSITY OF SOUTHERN MISSISSIPPI

WE'RE NOT GOING ANYWHERE

If you need us, we'll be here. As part of the Tarkett Group, a global leader in flooring solutions, FieldTurf has unmatched financial support and stability. With over 140 years of history, Tarkett has proved its strength having successfully weathered the toughest economic, social and commercial challenges.

You can be confident that we'll be around if you need us. We're not only with you for this field, but for the next one, the one after, and beyond.

FINANCIALLY STRONG

TARKETT SA
EPA: TKTT

TARKETT GROUP NET SALES **$3.5B USD**

TARKETT GROUP ADJUSTED EBITDA **$250M USD**

Results per December 31, 2022

SUPPORTED BY GLOBAL STRENGTH & HISTORY

12,500
EMPLOYEES

140 YEARS
COMPANY HISTORY

AND FOR ADDED SECURITY, YOUR FIELD COMES WITH THE BEST WARRANTY

We're not scared to back up what we preach. You'll probably never need to use our premier warranty, but if you do, you can rest easy knowing you're protected.

We were the first company in the industry to offer a third-party insured warranty, and we continue to lead the way.

Don't jeopardize your energy, time, and investment; protect it.

PREPAID FOR 8-YEARS
You should never have to pay for a warranty. Make sure yours doesn't have a buy-in cost.

NO DEDUCTIBLE, $0 OUT OF YOUR POCKET
Because if there is an issue, you shouldn't have to pay.

PER CLAIM & AGGREGATE LIMIT OF $33,000,000
What's a warranty good for if there are no funds remaining when you need it. Make sure you're actually covered.

EXCLUSIVE 10-YEAR WARRANTY ON OUR CORE SYSTEM

WE CONTROL QUALITY

WE CONTROL THE ENTIRE PROCESS

We're in control of your field from start to finish. We manage all aspects of the manufacturing value chain, which allows us to deliver products with proven leading quality.

A supplier that doesn't have full control over manufacturing has to purchase elements or outsource aspects of the process, increasing the chance of issues or finger-pointing and potentially leaving you out in the cold.

Ask the right questions to ensure your supplier has full control.

MANUFACTURING

+660M
SQ.FT. MANUFACTURED SINCE 2009

WORKFORCE

+500
FULL-TIME U.S. EMPLOYEES

+700
TOTAL U.S. EMPLOYEES DURING PEAK SEASON

WE DON'T CUT CORNERS BECAUSE WE UNDERSTAND WHAT'S ON THE LINE

When you choose FieldTurf, you're choosing quality. That's why we invest in quality materials, manufacturing and teams.

Our Calhoun manufacturing facility is one of the most advanced in North America, and one of the only in the industry to have their quality management systems certified to ISO 9001-2015, ISO 14001-2015 and health & safety management system certified to ISO 45001-2018.

MADE IN AMERICA

WITH LOCAL AND GLOBAL MATERIALS

"We've trusted FieldTurf for over 20 years now and have installed numerous fields, all with the same excellent experience. We can confidently say that this investment has paid dividends throughout our entire organization both immediately in the short-term and each and every year thereafter.

Jaime Sherwood
DIRECTOR OF ATHLETICS
WAYZATA HIGH SCHOOL, PLYMOUTH, MN

OUR PROOF IS IN THE GROUND

With over 25,000 installations worldwide, FieldTurf has been the surface of choice for over 20 years. We're trusted – at every level. From professional franchises (NFL, MLS, CFL, MLB, and more); NCAA Division I, II and III programs; to schools & municipalities.

EXPERIENCE

+15,000,000
HOURS OF EXPERIENCE

THAT'S ENOUGH TIME TO FLY AROUND THE WORLD
+4,500 TIMES

PRO

COLLEGIATE

OVER **1500** INSTALLATIONS

INSTALLATION IS OUR SECRET SAUCE

Don't underestimate the value of an experienced installation crew. Quality materials can only go so far. The success of your field greatly relies on their execution.

You will get one of the most experienced and knowledgeable teams in the industry. You'll access ASBA Certified Installers, in-house architects, expert project managers, and a team with thousands of years' experience in artificial turf.

"Absolutely amazing effort! These guys worked nights, weekends, holidays, in the rain and in the cold to finish the schedule as they promised. Like our team, they are committed to excellence!

Christopher Crenshaw
ASSOCIATE VP FOR FACILITIES PLANNING & MANAGEMENT
SOUTHERN MISSISSIPPI UNIVERSITY

+5 ASBA CERTIFIED BUILDERS

+65 FIELDTURF CERTIFIED INSTALLATION CREWS

+10 FIELDTURF CERTIFIED TURF PARTNERS

+40 FIELDTURF CERTIFIED CIVIL PARTNERS

WE MAKE IT EASY TO GET WHAT YOU WANT

Buying a new field can be a complex endeavor. Managing the bid process, fundraising, negotiating with contractors, committee meetings... a potential burden. That's why our SmartBuy Cooperative Purchasing Program is the leading solution to get the system you want at the best price. And it's easy!

1 → 2 → 3 → 4

SMARTBUY
Purchasing Program Tarkett Sports

+10 YEARS
EXPERIENCE

+1000
SUCCESSFULLY COMPLETED PROJECTS

PRE-NEGOTIATED PRICING - YOU KNOW YOU'RE GETTING
BEST PRICE

4 STEPS
SIMPLE 4 STEP PROCESS VS TRADITIONAL 13 STEP

DID YOU KNOW WE COULD EVEN FINANCE YOUR FIELD WITH FIELDTURF FINANCIAL?

IT'S NOT JUST SERVICE, IT'S A PARTNERSHIP

From the moment you purchase your field, we're partners, and our focus is your success. Our renowned Service team and FieldCare program are equipped with certified crews and leading experts. For repairs or maintenance, we're here to help. For us service isn't only about repairs, it's about arming you with the right tools to make you successful.

EXCLUSIVE ACCESS TO

Genius | SMART FIELD TECHNOLOGY

FieldSWEEP | LEADING FIELD SWEEPING UNIT

FieldCARE | LEADING MAINTENANCE PROGRAM

What it does ultimately is to ensure the lifespan of this field because now you're able to accurately measure what areas need maintenance and you're able to get that maintenance done. You can't beat it for the convenience and for what it gives you. It's going to definitely change your life and expand the lifespan of your field. And it makes your life as an athletic director that much easier.

Jasper E. Jewell, CMAA
DIRECTOR OF ATHLETICS
ATLANTA PUBLIC SCHOOLS

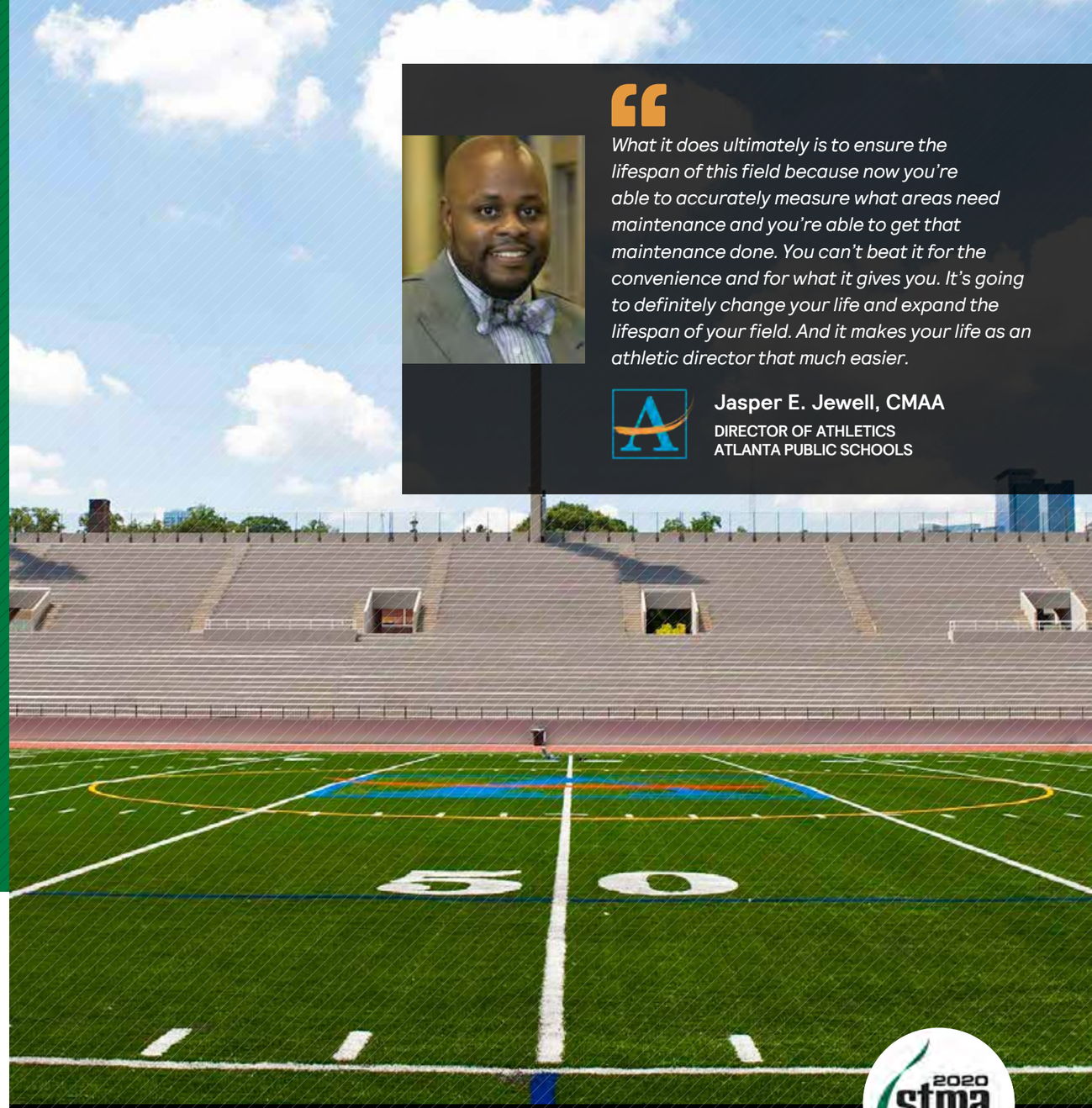

2020 stma INNOVATIVE AWARD

FieldTurf A Tarkett Sports Company | Genius Technology installed at:

Mercedes-Benz STADIUM · Los Angeles FC · OSU · RBM

CHANGE THE GAME

THE TARKETT SPORTS FAMILY – LEADERS IN SPORTS SURFACING

FieldTurf® A Tarkett Sports Company | BEYNON® A Tarkett Sports Company | renner® A Tarkett Sports Company | Tarkett SPORTS CONSTRUCTION | Tarkett SPORTS INDOOR | FieldTurf® LANDSCAPE A Tarkett Sports Company | GRASSMASTER By Tarkett Sports

© Copyright 2023. FieldTurf USA, Inc. All Rights Reserved.

FieldTurf®
A Tarkett Sports Company

800-724-2969 | info@fieldturf.com | fieldturf.com

FieldTurf®
A Tarkett Sports Company

THE GUIDE TO BUYING YOUR FIRST ARTIFICIAL TURF FIELD

WAIT...
NOT ALL ARTIFICIAL TURF IS MADE THE SAME?

YOU'VE DECIDED TO CONVERT YOUR NATURAL GRASS FIELD TO ARTIFICIAL TURF? THAT'S GREAT NEWS! WE APPLAUD YOUR DECISION TO OFFER YOUR PROGRAM A SURFACE THAT DELIVERS CONSISTENT PLAYABILITY AND SAFETY AND IS ENVIRONMENTALLY FRIENDLY.

So, what's next? How do you get started?

FUNDRAISING:
To move forward, you'll need the necessary funds to launch your project. You can raise funds through a variety of avenues like your booster club, alumni, grants, advertising, or partnerships. Did you know you can even finance your field? Ask your FieldTurf expert.

DESIGN YOUR DREAM FIELD:
This guide can help you evaluate what type of field is right for you. Read below!

FIND YOUR FIELDTURF EXPERT:
We have a team of leading experts to guide you through the process. Find your expert at **fieldturf.com.**

Did you know that by using the SmartBuy Cooperative Purchasing Program,the procurement process is simplified to a quick four-step process rather than the traditional way, which takes thirteen (or more) steps? Ask your FieldTurf expert about cooperative purchasing.

So, what type of field is right for you? Most would think all artificial turf is the same, "green-side up, please," but that's the furthest from the truth. There are numerous manufacturers that each deliver a variety of different systems. Let's start with the basics: fiber, infill, and backing:

TIP: **Take note of "KEY QUESTIONS" to ask throughout the guide.**

FIBER

Primarily made from polyethylene, the fibers act as the individual grass blades found in a natural grass field. These fibers are tufted ("stitched") into a carpet or backing, resembling a shag carpet. The carpet is rolled, delivered on-site, and assembled to build the field.

The ideal fiber should showcase low skin friction, superior durability, high resilience, and temperature stability.

KEY QUESTION

Ask your supplier if they manufacture their own fiber and if they have test reports attesting to the fibers' quality/durability.

Simple enough? But wait, there are several different types of fibers.

MONOFILAMENT

"Mono," a prefix that means "one, only, single," relates to one individual fiber blade. It's the most grass-like as it's designed to stand up straight. These types of systems are visually appealing and deliver natural ball-to-surface characteristics (ball-roll, ball-bounce), making them a popular choice for sports like soccer, lacrosse, and even football.

SLIT-FILM

These wider fibers are fibrillated to create a net or "honeycomb," which is designed to lie over and encapsulate the infill while absorbing heavy use from kicks, drags, tackles and slides. These systems are designed to be tough and deliver optimal agility.

HYBRID

With a combination of monofilament fibers and a slit-film fiber, hybrid systems are designed to provide fiber resilience while encapsulating the infill. It's the best of both worlds. Due to the variety of fibers, these systems deliver a full, lush look.

KEY QUESTION

Ask if the two fibers are tufted in the same stitch. This new method is preferred for long-term aesthetics. If they're tufted separately, the slit-film fiber can lay over while the monofilament will stand straight, creating a visual of unevenness and waving in the field.

INFILL DESIGN

If the fiber replicates the blades of grass, the infill acts as the...? You guessed it, the soil or dirt. Why is there a need for infill? Like in a natural grass system, you play in the soil and not on the grass. Infill is the cushioning layer of the turf system which absorbs the impact of falls. More infill will lead to better shock absorption.

Infill plays a vital part in performance, safety, and energy restitution. Selecting an infill system that is heavy and stable is critical in giving your athletes long-term and consistent safety. Extensive research and studies have proven that a minimum of 3 lbs. of sand + 3 lbs. of rubber, for a total of 6lbs. per square foot, is required to ensure that your field meets the safety threshold. Do your research.

The recipe is simple: More infill = Increased safety. There are three popular types of infill systems:

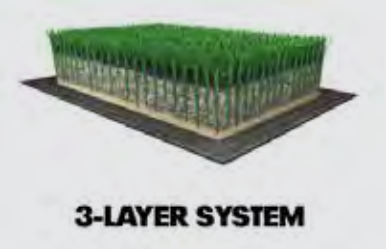

The system is built with a base layer of sand, a middle layer of sand and rubber, and a top layer of larger rubber. As the material properties of the rubber and sand in the middle layer interlock, the system offers added stability and energy restitution. Traditionally the heaviest system per square foot, the three-layer construction offers leading safety prevention. A proven system over the past 20 years, the three-layer system has proven experience.

This homogeneous infill system consists of a base layer of sand and a top layer of rubber to provide the optimal firmness required for athletic performance while providing proper shock absorption. A proven system over the past 20 years, the two-layer system has a dependable track record.

These systems are built on a pad and utilize a simple design, re-engineered with new age technology to offer an alternative surface solution constructed with thatch and either little rubber or completely rubber-free. This option can be the right choice for a variety of facilities depending on needs.

Here are the guidelines to follow to build a safe field:

1. Demand infill weights from every turf company.
2. Establish your infill weight minimums and have them written in the specifications. Make sure it's at least 6 lbs of infill per square foot.
3. Don't just list volume or weight ratios—you don't want companies cutting corners. Make sure the actual weight of sand and rubber is specified.

KEY QUESTION

Ask for independent safety research to validate the system's safety. Do your research, trust the science, and don't sacrifice on safety.

INFILL OPTIONS

When selecting your infill material, there are many options and categories, all with their own distinct benefits and drawbacks. The standard choice of infill material is styrene-butadiene rubber (SBR), which is primarily obtained through recycling the rubber in car tires.

Two types of SBR rubber are created through unique processes:

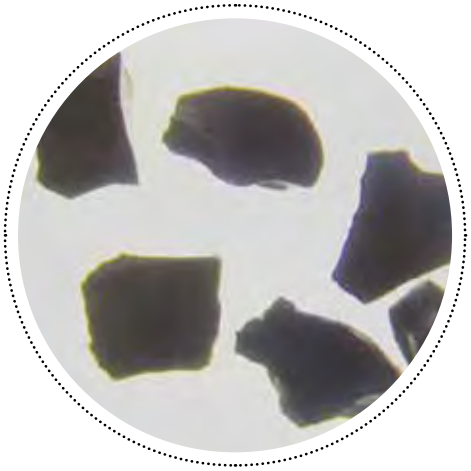

CRYOGENIC SBR RUBBER

The premier option of the two solutions, cryogenic SBR rubber is first ground through a mill, and then the smooth particles are separated from the rougher particles. Once separated, the rubber is frozen to a temperature of below -80 degrees Celsius (-112 degrees Fahrenheit,) creating a glass-like material which is processed again, this time through a specialized mill that cuts the frozen rubber into small, smooth and rounded particles. Cryogenic SBR rubber offers numerous benefits. Due to its round shape, the infill facilitates a consistent flow of water through the system, limiting the risk of infill migration caused by air bubbles in the system. Cryogenic SBR rubber connects effectively with silica sand to deliver premier energy restitution back to the athlete.

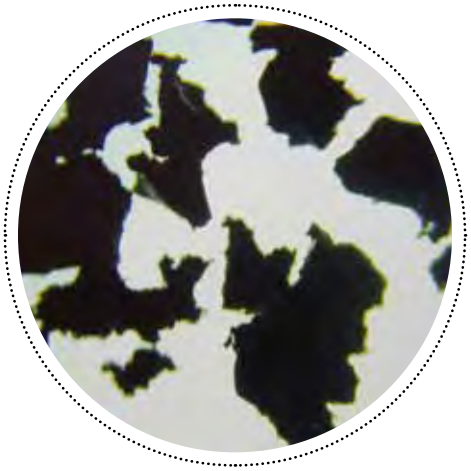

AMBIENT SBR RUBBER

During the grinding phase, ambient rubber is simply processed through a high-powered rubber mill. The result is granules that may be inconsistent in shape, with some appearing more jagged than others. Both cryogenic and ambient SBR rubber offer customers a quality system that has been tested, proven, and utilized in thousands of installations around the world.

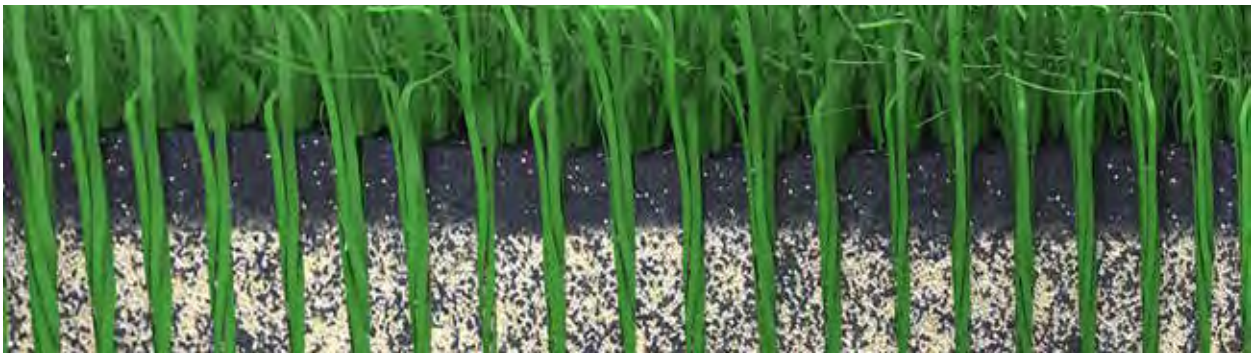

ALTERNATIVE INFILL OPTIONS

There is a wide array of infills for programs interested in alternative solutions to styrene-butadiene rubber (SBR). Before exploring options, it's essential to review the key questions to ask when researching "alternative solutions":

- Does the infill require additional irrigation?
- Does the system require the installation of an underlayment "shock pad"?
- Does the infill require additional maintenance?
- What's the lead time for the delivery of the material?
- What's the increased cost vs. styrene-butadiene rubber (SBR)?

Let's explore alternative solutions:

NATURAL INFILLS

These systems are produced using natural or organic materials, often helping divert waste from landfills. All natural infills will require the installation of an underlayment "shock pad" under the system to provide the proper shock absorption. Natural infills can be made from granulated olive cores, coconut peat, cork, and more.

POST-INDUSTRIAL RECYCLED RUBBER

The systems are produced using reclaimed post-industrial materials from various sources to create an alternative solution to SBR. A popular option is shoe grind material, created using excess/waste materials from leading shoe manufacturers. These infills will deliver similar performance, safety, and durability characteristics to the traditional styrene-butadiene rubber infill.

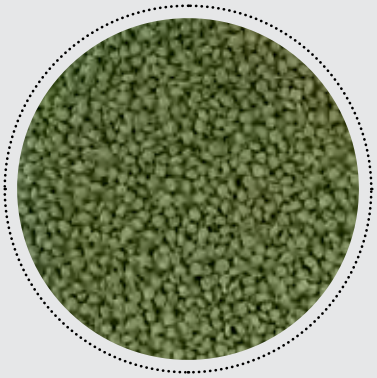

TPE - THERMOPLASTIC ELASTOMER

TPE is made from a class of copolymers or a physical mix of polymers and will also deliver similar performance, safety, and durability characteristics to the traditional styrene-butadiene rubber infill. Selecting a high-quality TPE can come at an expense but is crucial to ensure it can withstand rigorous mechanical wear and weathering.

BACKING & DRAINAGE

Why is the choice of backing so important? As the rows of fibers are tufted in the backing, they need to be coated to secure them. Your choice of coating application can lead to improved drainage results.

There exist two types of coating/backing systems:

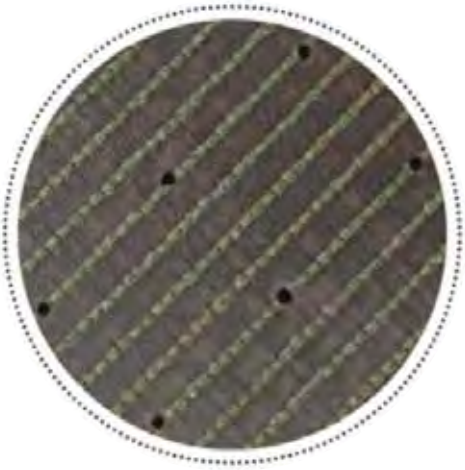

PERFORATED BACKING

The coating is applied across the entire backing, and then holes are punched to let water drain through when it rains. The thousands of holes allow for quick drainage.

FINGER-UNIT BACKING

The coating is only applied on the rows where fibers are tufted, leaving the rest of the backing completely porous for drainage. This method allows for ultra-quick drainage.

Depending on your budget, the region you're in, and the use that you're aiming to get out of your field, it may be worthwhile to invest in a superior drainage system. The right drainage system will ensure that your field can be used at all times—allowing you to maximize your investment. You don't want to convert from a natural grass field that doesn't drain to a turf field that doesn't drain.

THE RECIPE IS SIMPLE: BETTER DRAINAGE = MORE FIELD USE

Remember, when you're building your field, you're in control. Set the proper minimums to ensure every supplier adheres to your guidelines. Plan for long-term durability and don't sacrifice on safety.

CONVERSION

NATURAL GRASS TO ARTIFICIAL TURF

STAGE 1:
PLANNING
The project team reviews the site and performs a geotechnical survey to ensure it meets all soil requirements and stormwater management regulations.

STAGE 2:
EXCAVATION
The natural grass is removed, and the existing soil is excavated to the subgrade.

STAGE 3:
GEOTEXTILE
The specified underdrain system is installed and covered by a geotextile fabric.

STAGE 4:
PERIMETER CURB
The perimeter concrete curb and nailer are installed.

STAGE 5:
BASE
A free-draining stone base is installed and prepared for the carpet installation.

STAGE 6:
SURFACING
The artificial turf carpet is unrolled and sewn together in 5-yard sections from end to end.

STAGE 7:
FIELD MARKINGS
All the field lines, hash marks, logos, and marking are installed on the field manually by the field crew.

STAGE 8:
INFILL
The field carpet is infilled by spreading and brushing the materials in layers, slowly building up the field, following the infill system design.

FINAL INSPECTION
The finished field surface is inspected for final completion and approval.

CHANGE THE GAME

THE TARKETT SPORTS FAMILY – LEADERS IN SPORTS SURFACING

FieldTurf® A Tarkett Sports Company | BEYNON® A Tarkett Sports Company | renner® A Tarkett Sports Company | Tarkett SPORTS CONSTRUCTION | Tarkett SPORTS INDOOR | FieldTurf® LANDSCAPE A Tarkett Sports Company | GRASSMASTER By Tarkett Sports

© Copyright 2022. FieldTurf USA, Inc. All Rights Reserved.

FieldTurf®
A Tarkett Sports Company

800-724-2969 | info@fieldturf.com | fieldturf.com

BEYNON®

A Tarkett Sports Company

MAKING FAST LOOK GOOD

A VISION THAT CHANGED TRACK FOREVER

*THE LEADER IN TRACK SURFACING SINCE **1974***

WHY BEYNON

VERTICALLY INTEGRATED

Beynon controls all aspects of the manufacturing value chain. From start to finish, we're in control of your track.

TARKETT SPORTS BRAND

Part of Tarkett Sports, Beynon can offer a full range of additional surfacing products. From FieldTurf artificial turf to Tarkett gymnasium flooring, we have the solution for your project.

DESIGN & CONSTRUCTION EXPERTS

With over 30 factory trained installation crews worldwide, three Certified Track Builders on staff, in-house World Athletics testing, as well as a team of designers, Beynon has one of the most experienced and knowledgeable teams in the industry.

EXPERIENCE

With over 7,500 installations in North America in the last 10 years, Beynon Sports has been at the surface of the most significant moments in track & field: 2022 World Athletics Championships, 2022 Commonwealth Games, and NCAA Division I Outdoor Championships, to name a few.

FINANCIALLY STRONG

Part of Tarkett Sports, a division of the Tarkett Group, a worldwide leader of innovative flooring and sports surface solutions, Beynon has unprecedented financial support and stability. You can rest easy.

LEADING DURABILITY

Manufactured and installed with the highest attention to detail, Beynon's systems showcase proven durability. Numerous Beynon surfaces have seen over 20 years of use.

TRUSTED

At every level, Beynon Sports is the leading choice in track surfacing! Our systems are trusted by international governing bodies, NCAA Division I programs, thousands of high schools, and distinguished municipal facilities.

ENDLESS PURSUIT OF INNOVATION

From the original full pour systems to our resurfacing technology and post-tensioned concrete tracks, our innovations continue to sprint past the competition.

SERVICE

We are as committed to your program as you are, and we're with you for the long term. When you buy a track from Beynon, you're buying from a company that knows how to take care of you. It's what we do best.

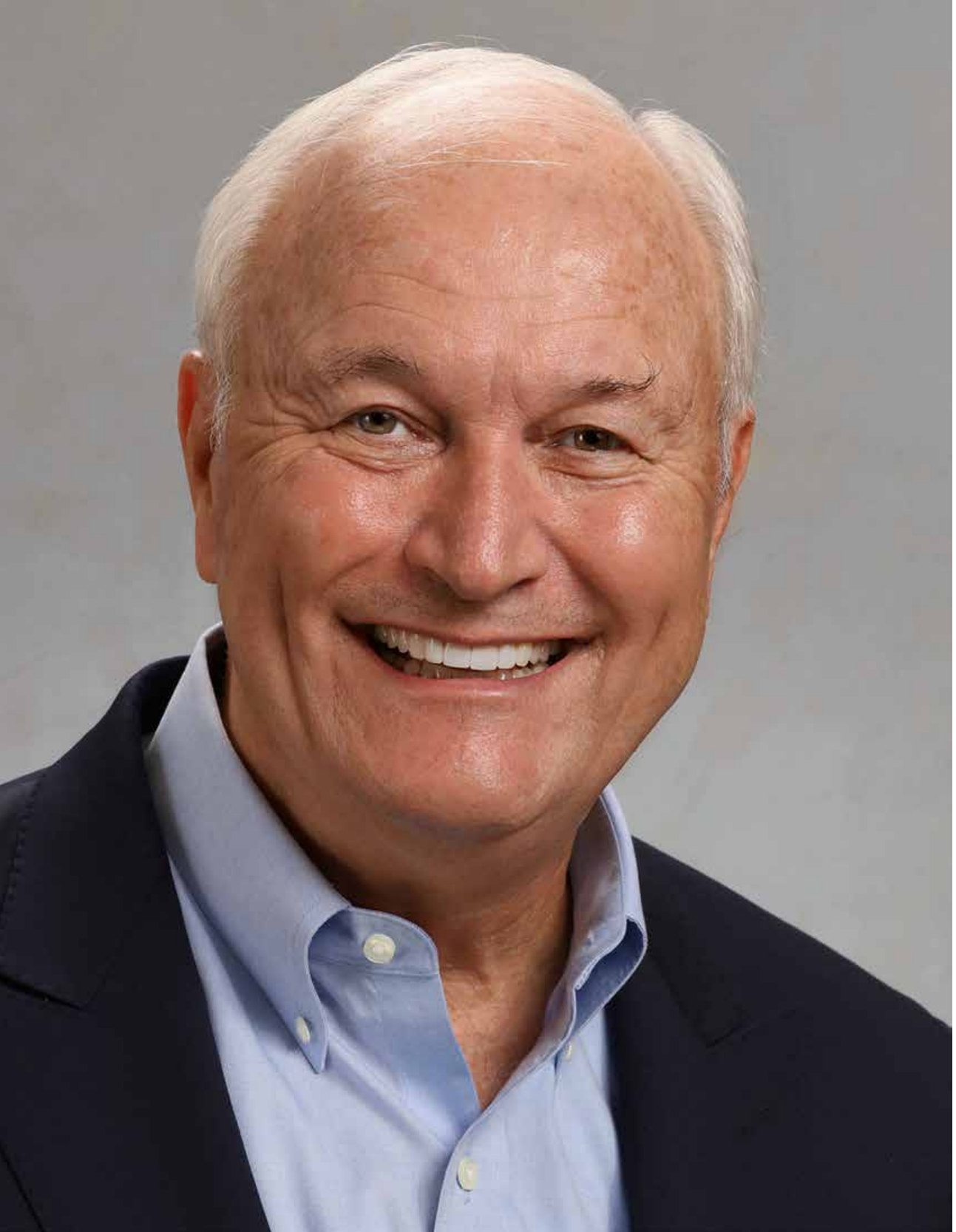

A HISTORY OF DEDICATION TO EXCELLENCE

OVER 40 YEARS AGO, John T. Beynon founded Beynon Sports with a vision to revolutionize the sport surfacing industry, embedding his family's name and values into the very foundation of the company. Today, Beynon Sports honors that legacy, having grown into a global leader with locations in Maryland, Oregon, Texas, and California. Our commitment to quality, durability, and athlete safety is demonstrated across our over 7,500 installations. The Beynon name is not just a brand; it's a symbol of trust, excellence, and a commitment to the communities and athletes we serve.

Beynon surfaces are found in North America's most prestigious track and field facilities, reputed collegiate campuses, high schools, and city parks.

Not only do we strive to make you fast, but we help keep you safe. Our specialized, high-performance synthetic athletic surfaces are designed for speed, competition, and most importantly, daily training. Should it be at one of our thousands of outdoor tracks, indoor fieldhouses, or multipurpose gymnasiums, you will feel the difference a Beynon surface makes.

IN THE SPRING OF 2008, Beynon Sports joined the Tarkett Sports family, which combined the most recognized and prestigious name in the artificial turf market in FieldTurf with Beynon Sports' track and field, fieldhouse, and gymnasium surfacing systems. The result is a global firm with unmatched financial strength and a dedication to innovation, customer service, and excellence.

Through this partnership, we can offer unprecedented service, quality, and support, as well as the financial backing to stand behind our products. You can rest easy knowing you are protected.

BUILT FOR WORLD-CLASS SPEED

HAYWARD FIELD:
HOST OF 2022 WORLD ATHLETICS CHAMPIONSHIPS
FIRST TIME IN HISTORY IN THE UNITED STATES

"Watch the World Championships (on Beynon Sports) to see what real speed is...These are the fastest and strongest athletes in the world on U.S. soil and it just happens to be at the greatest stadium for track & field in the world and on the fastest surface in the world."

ATO BOLDON
4X OLYMPIC MEDALIST, NBC SPORTS ANALYST

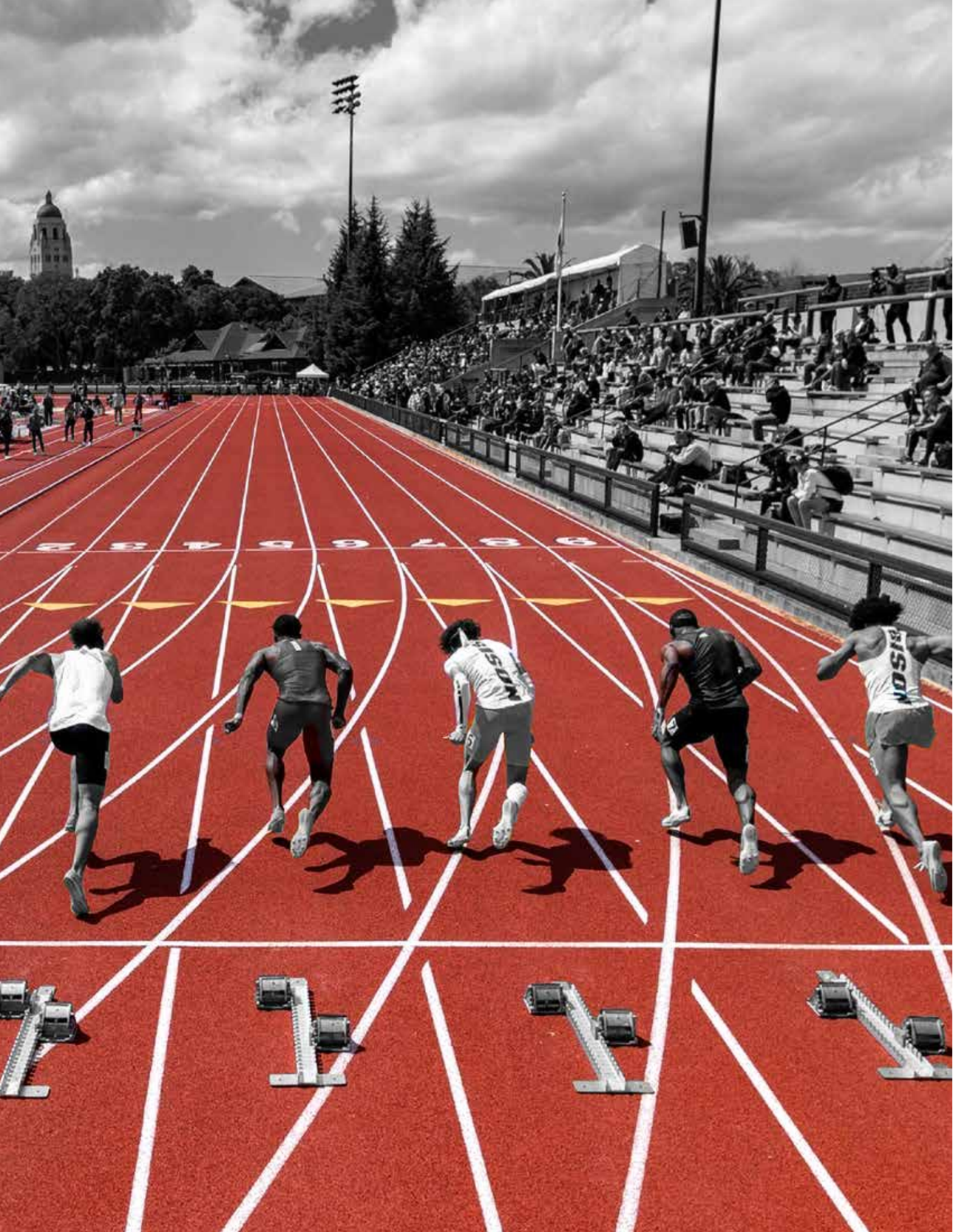

LEADER IN THE NCAA

AT THE SURFACE OF LEADING COLLEGIATE PROGRAMS NATIONWIDE

PREMIER VENUES

BEYNON SPORTS IS THE LEADING MANUFACTURER OF CLASS I WORLD ATHLETICS CERTIFIED SURFACES IN THE UNITED STATES.

OVER 50 CLASS II WORLD ATHLETICS-CERTIFIED FACILITIES WORLDWIDE

- ARGENTINA
- BAHAMAS
- BERMUDA
- BRAZIL
- BRUNEI
- CANADA
- CHILE
- COLOMBIA
- COSTA RICA
- DOMINICAN REPUBLIC
- FRANCE
- INDIA
- MALAYSIA
- MEXICO
- PARAGUAY
- SPAIN
- SRI LANKA
- UNITED KINGDOM
- UNITED STATES
- VENEZUELA

TRUSTED AT EVERY LEVEL

FROM PREMIER TRACK VENUES TO LOCAL COMMUNITY FACILITIES, ATHLETES AND OWNERS ARE RAVING ABOUT OUR SURFACES.

DON'T JUST TAKE OUR WORD FOR IT—ASK A BEYNON TRACK OWNER HOW THEY FEEL ABOUT US.

"To maintain a successful, broad-based athletics department, our students need first-class facilities to train, practice and compete. This new outdoor track and field stadium will provide that type of facility for our men's and women's track and field programs while giving them a long-term, on-campus home."

MARK COYLE | UNIVERSITY OF MINNESOTA
ATHLETICS DIRECTOR

"As nice as any facility needs to look, it doesn't mean much if you're not left with a quality, competitive surface. Our track has been completed and it certainly passed everyone's 'look test'. Most exciting however is that it also passes the performance test. We were fortunate enough to be involved with the Inspiration Games this last July. That was to be our first competition in the new facility and we were able to host a number of elite, world class athletes. The athletes ran well, they ran fast and the reviews, especially about the surface performance aspects, were all, overwhelmingly positive. We have a fast, attractive and durable surface and we couldn't be happier."

DOUG TODD | MT. SAN ANTONIO COLLEGE
DIRECTOR OF ATHLETIC SPECIAL EVENTS

"They were great. The advantage they brought to us, is that they were a local company. This is as close to perfect you're going to get for an indoor track facility, anywhere in the country."

ERIC SAWYER | SPOKANE SPORTS
CEO

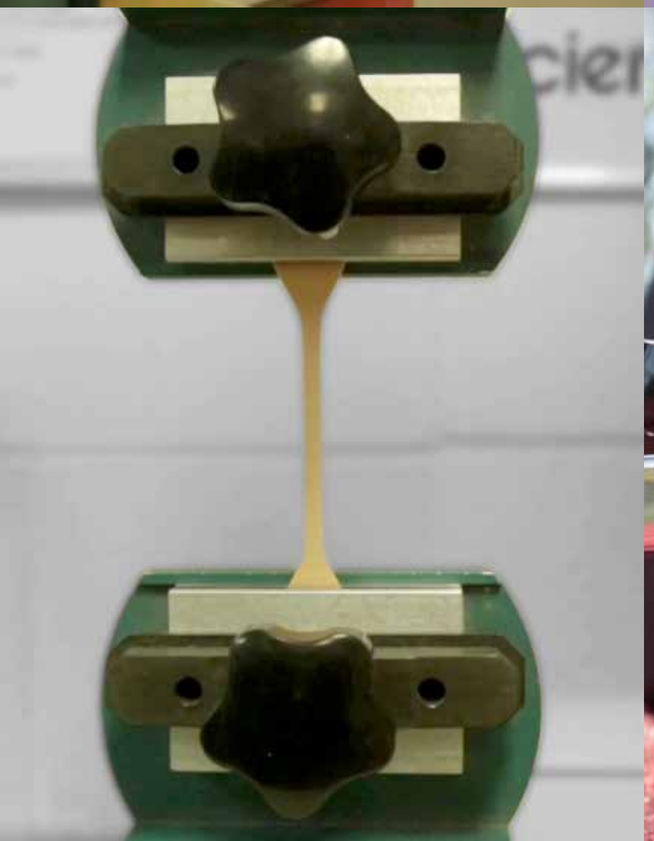

WE'RE WITH YOU EVERY STEP OF THE WAY

Beynon controls all aspects of the manufacturing chain, which allows us to create the right product, regardless of the facility. Because our founder's name stands behind each track that we make, we take special care throughout the entire installation process. We do this by only using certified Beynon track installers, specialized equipment, and skilled craftsmen, which ensures impeccable results.

DESIGN

Our team has been involved in the conceptual planning of over 150 collegiate track and field facilities. We work directly with local engineers and architects on your project, adding years of expertise to the planning and execution process.

FORMULATION

Our philosophy on materials selection is simple: use only the best environmentally friendly, bio-based raw materials because we understand that the material choices we make today will affect your athletes for years to come.

MANUFACTURING

Focused on an unwavering commitment to quality, our Hunt Valley (Maryland, USA) manufacturing facility is one of the few in the industry to have its Quality Management Systems certified to ISO 9001-2015.

INSTALLATION

Only Beynon installation crews and select certified partners are allowed to work on your projects, ensuring superior craftsmanship and quality.

BUILDING & DESIGNING THROUGH EXPERIENCE & EXPERTISE

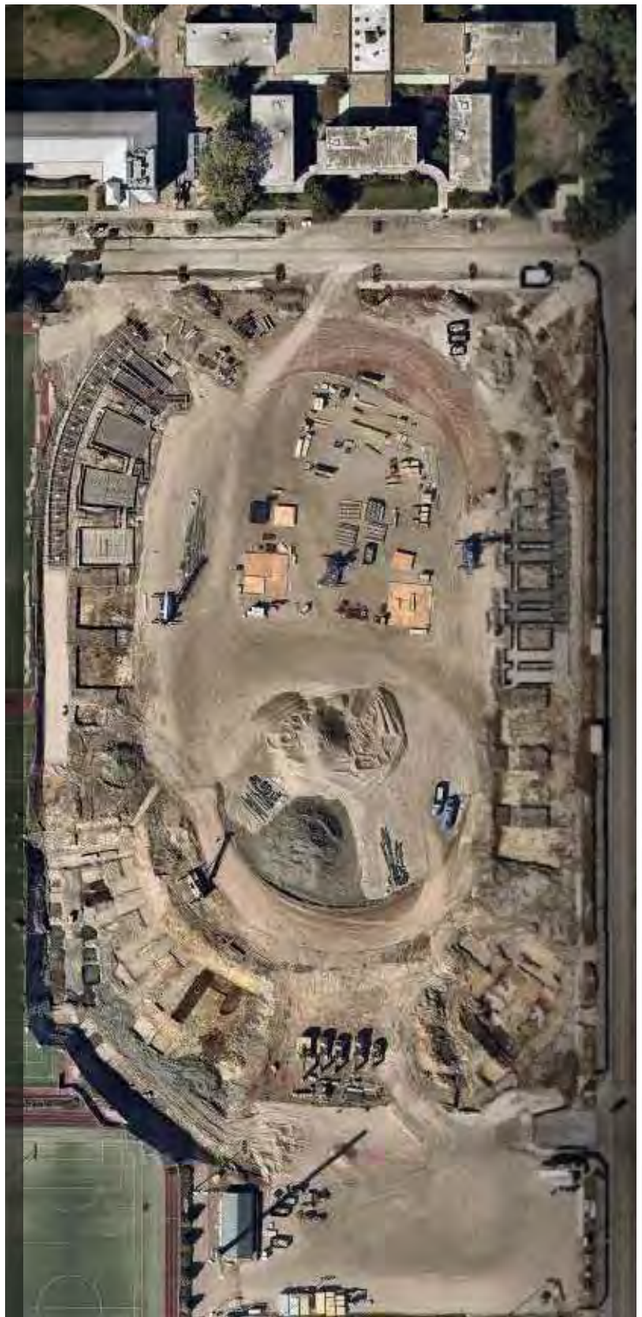

WE'RE NEVER SATISFIED WITH WHERE THE BAR IS

BEYNON SPORTS IS AT THE FOREFRONT OF SPORTS SURFACING INNOVATION & TECHNOLOGICAL ADVANCEMENTS

Our team is made up of the finest and most experienced in the industry, from world-famous track coaches to the leading polyurethane research chemists and the most experienced installation personnel. Through vigorously researching and developing new environmentally sustainable technologies, we are able to bring revolutionary sports surfacing systems to your athletes.

We adhere to the highest environmental standards by incorporating renewably sourced raw materials into our systems. We are the leader in the research and development of environmentally conscious products in the polyurethane sports surfacing industry.

Beynon products have been rigorously tested by internal quality assurance analyses, and the results have been vetted by World Athletics, which surpassed EN, DIN, and ASTM standards.

ENTRY-LEVEL SERIES

PROVEN AND TRUSTED

BSS 100 | BSS 200

Designed for long-term durability, our Entry Level Series systems offer an economical, low-maintenance solution. Proven and trusted nationwide, these systems are installed at hundreds of high school and city venues.

Our Entry-Level Series is backed by Beynon's comprehensive 5-year warranty.

BSS 100

The BSS 100 is a cost-effective track surface solution for local schools and communities searching for an all-weather system. As a World Athletics certified product, the BSS 100 offers excellent performance results and a quality system design.

WORLD ATHLETICS CERTIFIED	
BOND TO SUBSTRATE:	Mechanical
TEXTURES:	Structural Spray Water-based structural spray
FEATURED INSTALLATIONS:	Austin Peay University, TN Indian Valley High School, OH Eanes Independent School District, TX

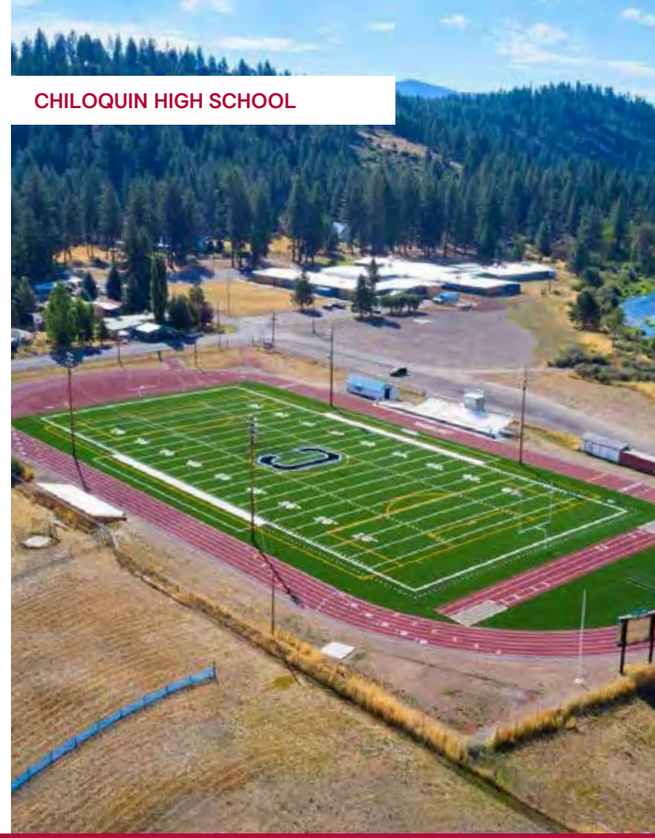

CHILOQUIN HIGH SCHOOL

BSS 200

The BSS 200 system builds on Beynon's proven design of basemat structural spray systems by providing an additional impermeable seal layer to keep rain and snow from passing through the basemat into the subbase. The BSS 200's seal layer was engineered to withstand tough climates, providing superior durability.

WORLD ATHLETICS CERTIFIED	
BOND TO SUBSTRATE:	Mechanical
TEXTURES:	Structural Spray Water-based structural spray
FEATURED INSTALLATIONS:	Alvin Independent School District, TX Walla Walla High School, WA Elk River High School, MN

GLENROCK HIGH SCHOOL

INTERMEDIATE SERIES

VALUE AND PERFORMANCE

BSS 300 | BSS 1000ML

Offering a balance of durability and performance, our Intermediate Series was designed for venues looking for added features without the need of a premier surface. These systems have been a popular choice for high schools and collegiate facilities.

Our Performance Series is backed by Beynon's comprehensive 5-year warranty for the BSS 1000 ML and 10-year warranty for the BSS 300 system.

BSS 300

The BSS 300 system delivers a leading quality surface without breaking the bank. Through innovative system construction and local manufacturing, this sandwich system delivers on everything you've been looking for. It offers a similar feel and performance to traditional full-pour systems, along with improved shock absorption for daily training.

WORLD ATHLETICS CERTIFIED	
BOND TO SUBSTRATE:	Mechanical
TEXTURES:	Embedded Encapsulated Retention Coat Hobart
FEATURED INSTALLATIONS:	University of North Florida, FL Mater Dei High School, CA Fort Benning, GA

GARRETSON HIGH SCHOOL

BSS 1000 ML

With a similar design as competitive performance products, our BSS 1000 ML system offers excellent performance and feeling underfoot. You can rest easy knowing it's locally manufactured and installed by our expert crews.

WORLD ATHLETICS CERTIFIED	
BOND TO SUBSTRATE:	Chemical
TEXTURES:	Embedded Encapsulated Retention Coat Hobart
FEATURED INSTALLATIONS:	Georgia Southern University, GA University of Minnesota-Duluth, MN East High School, UT

ARDMORE CITY SCHOOLS

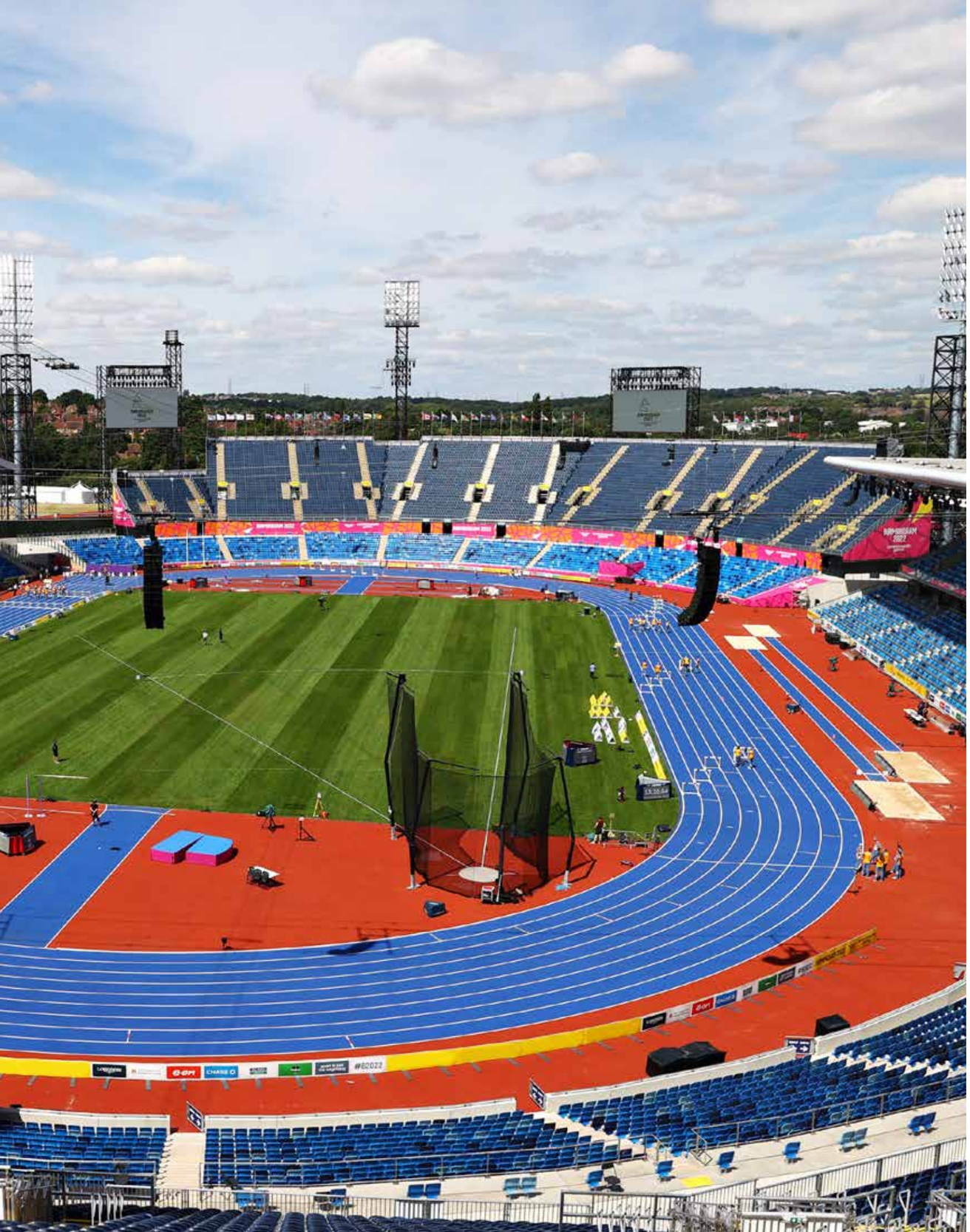

PERFORMANCE SERIES

WELCOME TO THE NEXT LEVEL

BSS 1000 | BSS 2000 | BSS 2000RE | BSS 4000

Installed at premium venues and renowned collegiate facilities, our Performance Series systems are the trusted surface of top-level training and competition. Fully chemically bonded, the systems offer more two-component polyurethane than competing systems and deliver premier shock absorbency and energy return.

Our all-inclusive 10-year warranty is offered on select Performance Series surfaces.

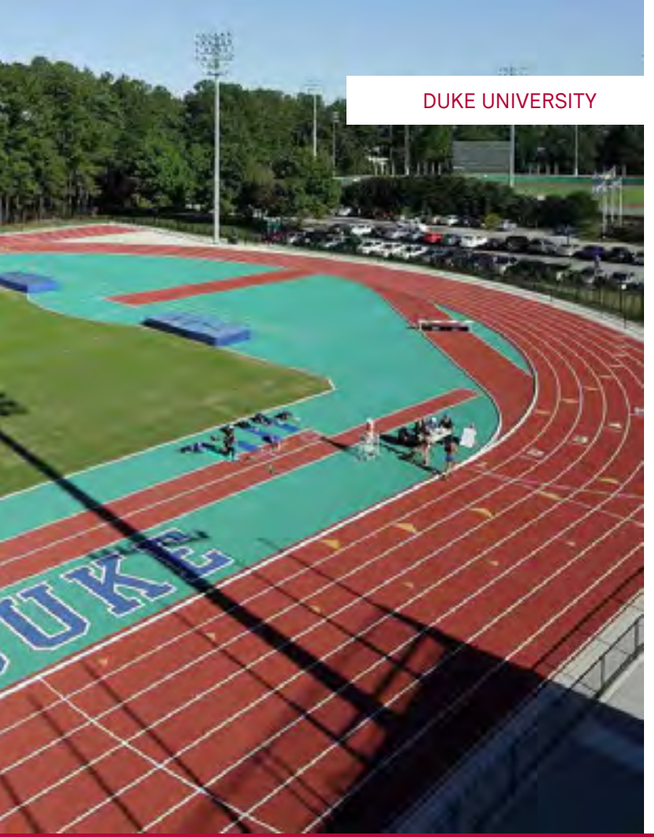

DUKE UNIVERSITY

BSS 1000

A leading choice among elite NCAA programs and international venues, our BSS 1000 system is designed to provide optimal shock absorbency and energy return for daily training and competitions. With over 700 installations over the last 30 years, our BSS 1000 has a proven reputation of excellence.

WORLD ATHLETICS CERTIFIED	
BOND TO SUBSTRATE:	Chemical
TEXTURES:	Embedded Encapsulated Retention Coat Hobart
FEATURED INSTALLATIONS:	Trinity University, TX Rutgers University, NJ William & Mary University, VA

BSS 2000

Designed for the best that are looking for the best, the BSS 2000 system features a force reduction layer of high-performance butyl rubber and two-component polyurethane. Installed at over 80 high-profile venues, our BSS 2000 system is renowned across the globe.

WORLD ATHLETICS CERTIFIED	
BOND TO SUBSTRATE:	Chemical
TEXTURES:	Embedded Encapsulated Retention Coat Hobart
FEATURED INSTALLATIONS:	Universiy of Oregon - Hayward Field, OR Oral Roberts University, OK University of Illinois, IL

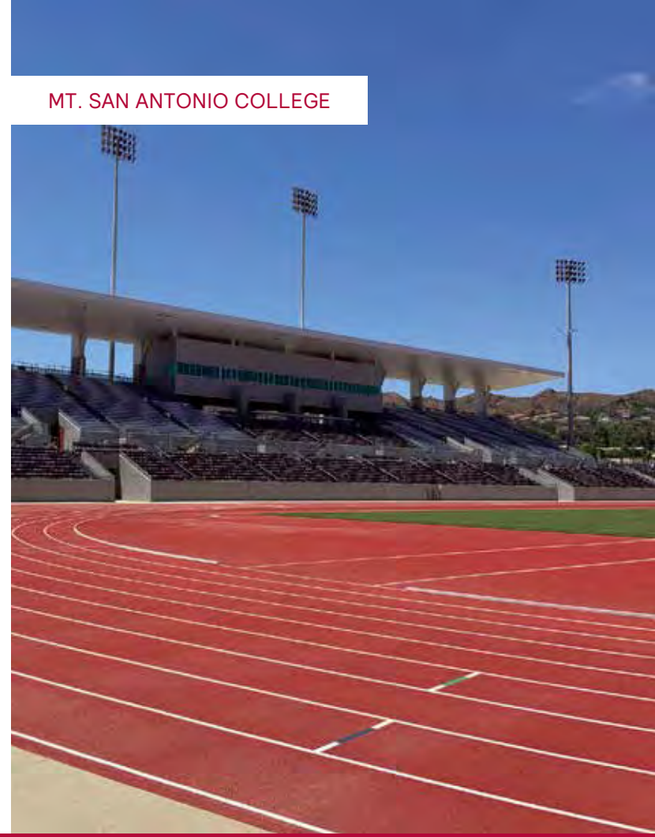

MT. SAN ANTONIO COLLEGE

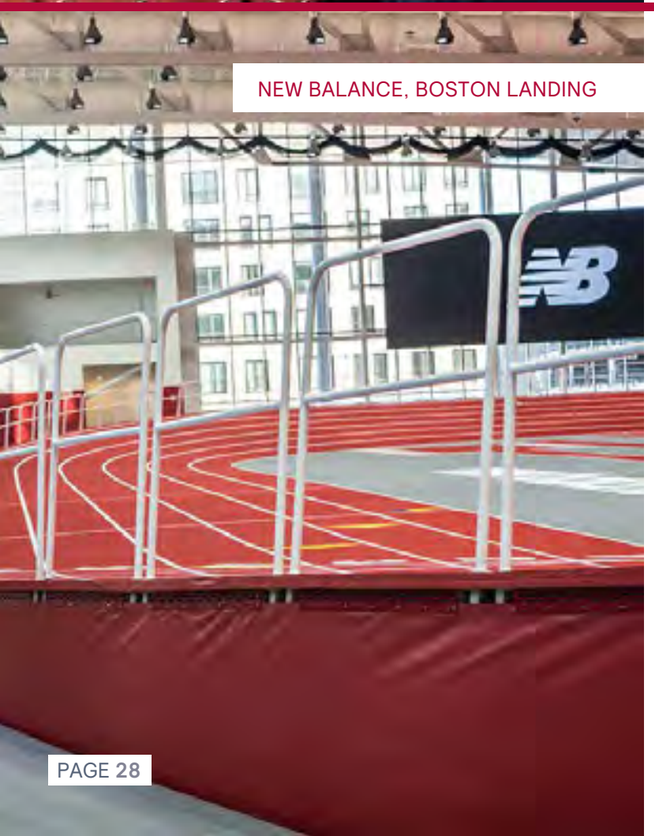

NEW BALANCE, BOSTON LANDING

BSS 4000

Offered exclusively on our Rise-N-Run hydraulic banked indoor system and permanent banked system, the BSS 4000 system delivers leading comfort, performance, and sound attenuation. Designed to allow the plywood under the system to move freely, the system utilizes the same design as our renowned BSS 2000 and is only offered with our leading Hobart texture.

WORLD ATHLETICS CERTIFIED	
BOND TO SUBSTRATE:	Chemical
TEXTURES:	Hobart
FEATURED INSTALLATIONS:	New Balance, Boston Landing Indiana State Fairgrounds University of Pennsylvania University of Kentucky

BSS 2000 RE

The BSS 2000 Resurfacing System is a revolutionary process that restores the appearance and texture of your existing track surface and dramatically enhances the feel under foot. Not only does it improve aesthetics, but it can bring aged rubber sheet good products and two-component polyurethane systems to within World Athletics performance parameters.

BOND TO SUBSTRATE:	Chemical
TEXTURES:	Embedded Encapsulated Hobart
FEATURED INSTALLATIONS:	Buccaneer Stadium, TX University of Tennessee, TN Wake Forest University, NC

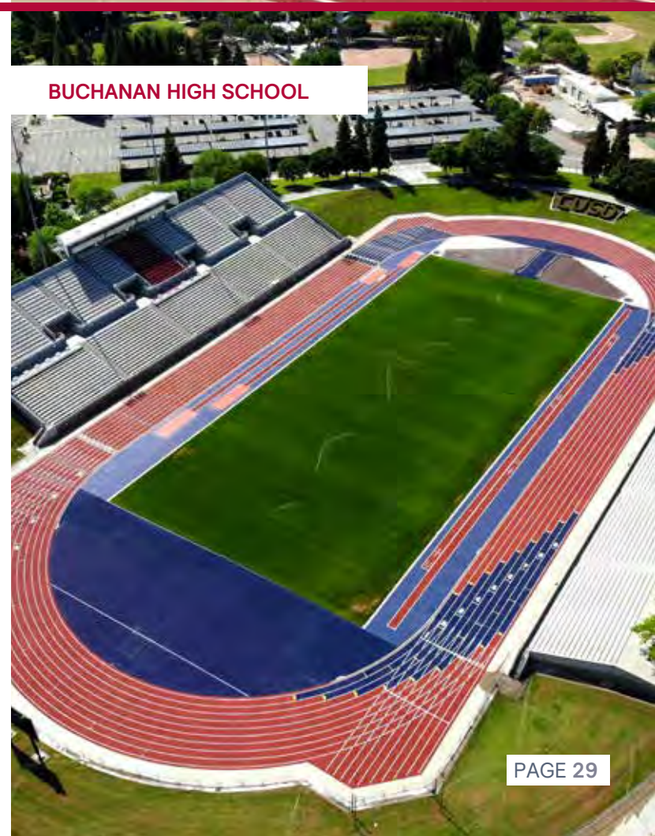

BUCHANAN HIGH SCHOOL

THE ROAD TO SUCCESS RUNS UPHILL

INDOOR SERIES

LET'S TAKE IT INSIDE

BSS 1000 HOBART TEXTURE | POLYTURF | POLYTURF PLUS | POLYTURF PLUS SP | POLYTURF PAD & POUR | POLYTURF MULTIPURPOSE

All of Beynon's indoor sports flooring systems are seamless, self-leveling, and have achieved GreenGuard Gold™ certification, ensuring superior indoor air quality for schools, healthcare, and athletic facilities.

BSS1000 HOBART TEXTURE

Beynon's specialized Hobart Texture™ was engineered to eliminate the EPDM granule migration found in traditional embedded track systems. The Hobart Texture™ locks the EPDM granule in place with our exclusive BEYLOCK polyurethane binder and BEYCOAT water-based aliphatic coating. This installation technique adds years to the life of your surface, all while providing an unmatched performance experience.

Beynon's Hobart Texture is available in a variety of standard and custom colors that can be produced to match your school's or team's color palette.

SPIKE RESISTANT

NO STAINS

SEAMLESS CONSTRUCTION

EXCEPTIONAL SHOCK ABSORPTION

TUNABLE FORCE REDUCTION LAYER

EASY MAINTENANCE

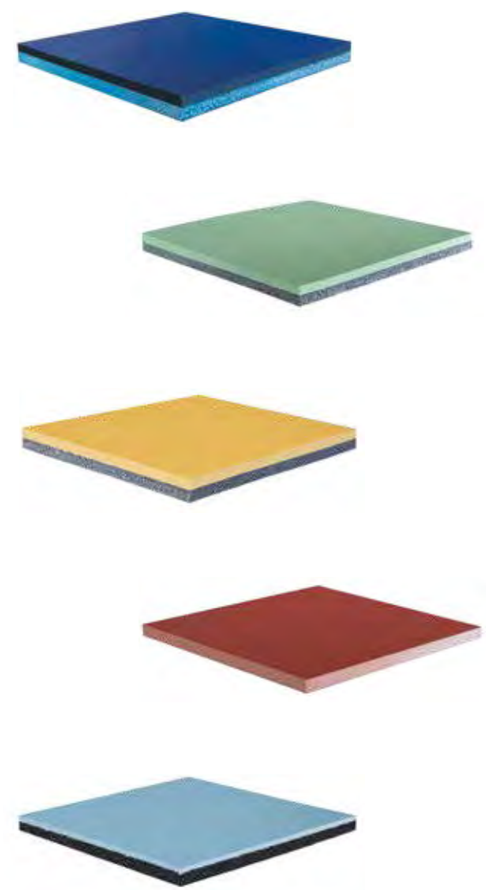

MIX & MATCH

We understand that your indoor facility needs to be a place for more than just track and field, which is why our wide array of indoor systems allows you to mix and match the right combination for your program.

Our indoor surfaces are both cost-efficient and virtually effortless to maintain. No annual stripping or waxing is required—simple dust mopping or automatic scrubbing will do. Plus, each surface is finished with a UV-stabilized coating for stain and fade resistance.

MULTIPLE SPORTS ONE FACILITY

	POLYTURF	POLYTURF PLUS	POLYTURF PLUS SP	POLYTURF PLUS PAD & POUR	BSS 1000 HOBART
				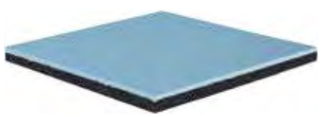	
SPIKE RESISTANT	✗	✗	✓	✗	✓
TRACK & FIELD	★★★☆☆	★★★☆☆	★★★★½	★★★☆☆	★★★★★
BASKETBALL	★★★★½	★★★★★	★★★★☆	★★★★☆	★★★★☆
VOLLEYBALL	★★★★☆	★★★★★	★★★★½	★★★★☆	★★★★☆
TENNIS	★★★☆☆	★★★☆☆	★★★★☆	★★★☆☆	★★★★★
WEIGHT ROOM	★★★★½	★★★☆☆	★★★★★	★★☆☆☆	★★☆☆☆

BANKED SYSTEMS: NEW BALANCE

BANKED SYSTEMS

WE KNOW EACH FACILITY IS UNIQUE, WHICH IS WHY WE HAVE A SOLUTION FOR EVERY PROGRAM.

LOOKING AT RUNNING FROM A DIFFERENT ANGLE

A long tradition of excellence carries over into our banked systems. Since their introduction in 1980, banked indoor track venues have grown exponentially across the world. Their innovative design counterbalances the centrifugal force on the athletes running along the bend evenly, regardless of the lane.

RISE-N-RUN - HYDRAULIC BANKED SYSTEM

Rise-N-Run, Beynon's hydraulic banked system, took the industry by storm with its revolutionary design and construction. Built with 20% more steel and 20% bigger pistons than competing systems, Rise-N-Run offers not only unmatched performance and durability but also the optimal grounds for high-speed training and competition.

PERMANENT BANKED SYSTEM

Engineered for single-purpose track venues, our permanent system offers a proven track record and unbelievably fast times—just ask Boston University. This system can be custom-engineered to flawlessly match your facility.

PORTABLE / TEMPORARY BANKED SYSTEM

Converting your facility from track meet to everyday use shouldn't be a daunting task. We understand that your facility needs to be flexible. Flexibility shouldn't mean you have to compromise quality. We handle everything from the design to the installation and certification, taking all the guesswork out of your project. We've been trusted by the best to turn their space into a premier track facility.

DURABILITY IN POOR SOIL AREAS

RESISTANCE TO CRACKING

IMPROVED DRAINAGE

EXISTING SITE REMEDIATION

Through Renner Sports, a Tarkett Sports Company, we can offer the leading post-tensioned concrete subbase construction available.

REDEFINE STRONG

POST-TENSIONED CONCRETE IS BUILT TO TAKE ON THE HARSHEST OF CONDITIONS

Did you know that over 50% of the construction budget for your outdoor track is invested in the high-performance track surface? Asphalt irregularities, including cracks, settling, and uncorrected deviations in the planarity of the asphalt base or wear course, can telegraph or reflect through to the running track surface. Use PTC and avoid this risk.

WHY YOU SHOULD CONSIDER PTC OVER ASPHALT?

With an expected lifecycle of nearly 50 years, a post-tensioned concrete (PTC) track subbase can last nearly three times longer than an asphalt base. Requiring only minor repairs every decade, post-tensioned concrete subbase saves not only money but also time.

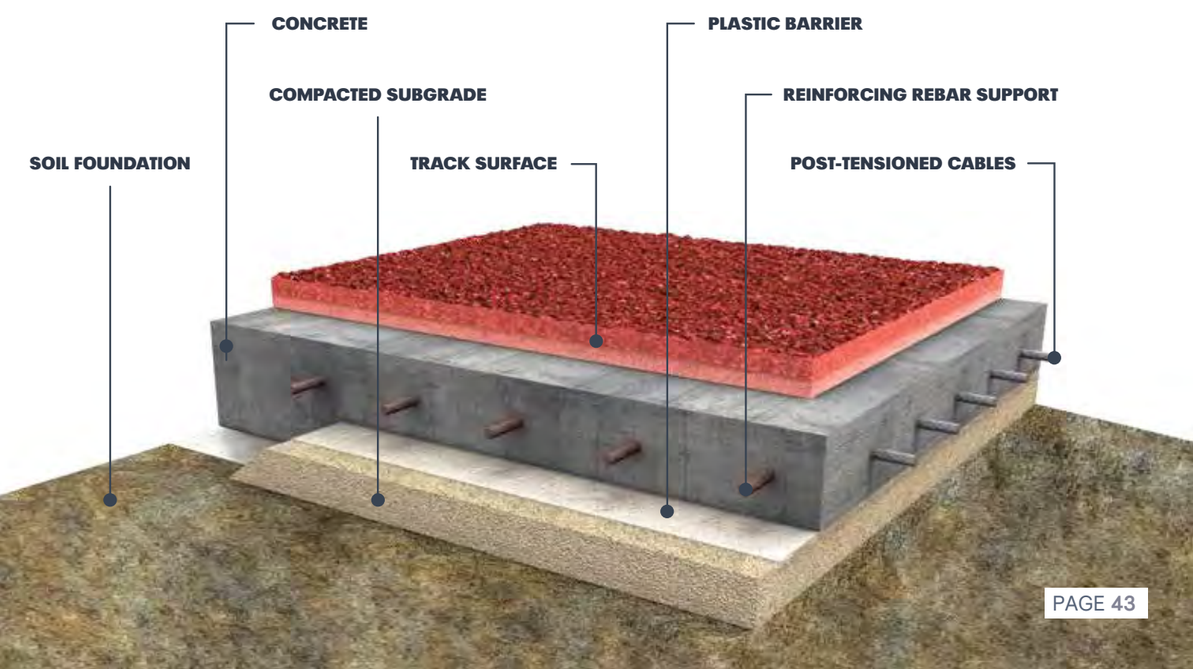

DON'T JUST TAKE IT FROM US

THE TRACK WORLD IS RAVING ABOUT BEYNON

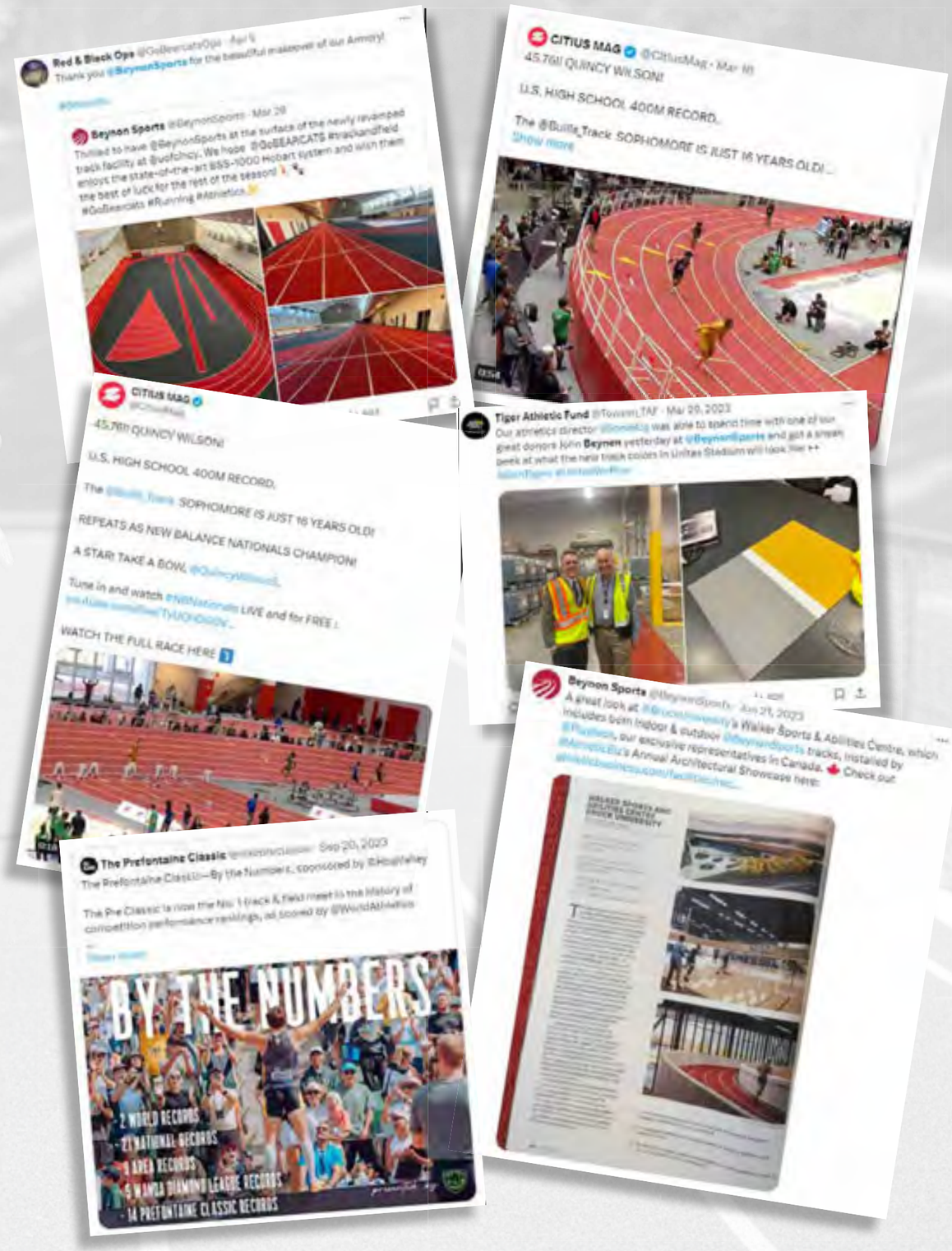

AT THE SURFACE OF THE WORLD'S TOP EVENTS

WORLD ATHLETICS CHAMPIONSHIPS
2022

U.S. OLYMPIC TRIALS -
2024, 2021, 2016, 2012 +

NCAA DIV I
OUTDOOR CHAMPIONSHIPS
2024, 2023, 2022, 2021 +

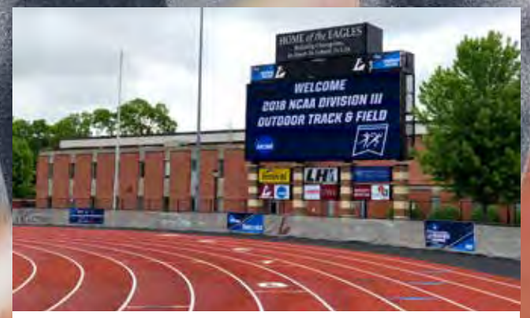

NCAA DIV II
OUTDOOR CHAMPIONSHIPS
2022, 2021, 2019, 2018 +

WORLD INDOOR CHAMPIONSHIPS
2016

CANADIAN CHAMPIONSHIPS
2024, 2023, 2016

NCAA DIV III
OUTDOOR CHAMPIONSHIPS
2021, 2018, 2017, 2016 +

COMMONWEALTH GAMES
2022, 1994

INDOOR TRACK & FIELD CHAMPIONSHIPS
2024

PREFONTAINE CLASSIC
2024, 2023, 2022, 2021 +

TENNIS, PICKLEBALL, & COURT SURFACING

THE ULTIMATE SURFACE EXPERIENCE

From consultation to design, construction, and everything in between, let Beynon engineer your court for years of use and enjoyment. We offer a wide range of systems, base construction, color options, fencing, lighting, and equipment to create the ideal facility that meets your needs.

NUMEROUS TEAMS ACROSS THE COUNTRY TO BRING YOUR DREAM COURT TO LIFE

BEYNON® A Tarkett Sports Company — NORTHWEST STATES

renner® A Tarkett Sports Company — ROCKY MOUNTAIN STATES

zaino® A Tarkett Sports Company — SOUTHERN CALIFORNIA

DESIGN

Our team can help plan and design your tennis, pickleball, basketball, or athletic surface. We've delivered leading surfaces for a variety of organizations—High-performance facilities, municipal parks, community centers, private clubs, homes, and more!

BUILD

Our specialized crews utilize only the latest industry standards to build your dream surface. Over 30 years of experience have enabled us to perfect every construction phase. We can make your school, team, or club color pop with a varied selection of vibrant colors!

MAINTAIN

Has your court seen better days? Whether it's filling a crack, leveling out bird baths, restriping, or recoating a failing surface, our certified crews will bring your court back to its initial prestige. Need your court cleaned? We can do that as well!

EQUIP

Not only can we offer you a world-class surface, but we can also equip your facility from top to bottom. Select from a full range of fencing, Lighting, and sports equipment. Easy right? Now you won't have to deal with ten different companies for your project.

THE TARKETT SPORTS FAMILY – LEADERS IN SPORTS SURFACING

FieldTurf® A Tarkett Sports Company | BEYNON® A Tarkett Sports Company | renner® A Tarkett Sports Company | Tarkett SPORTS CONSTRUCTION | Tarkett SPORTS INDOOR | FieldTurf® LANDSCAPE A Tarkett Sports Company | GRASSMASTER By Tarkett Sports

© Copyright 2024. FieldTurf USA, Inc. All Rights Reserved.

BEYNON® A Tarkett Sports Company

888-240-3670 | INFO@BEYNONSPORTS.COM | BEYNONSPORTS.COM

Tarkett SPORTS

REIMAGINING SPORTS CONSTRUCTION

pti

WORLD-CLASS FROM START TO FINISH

THE BEST PEOPLE, THE BEST PARTNERS, THE BEST PRODUCTS.

At Tarkett Sports, everything we do – and the way we do it – is aimed to make the process easier for you. We focus on ensuring your experience is memorable and hassle free.

We understood long ago that a successful sports surface relies on a quality product that's installed by a quality team. We've built our family by combining the best people and the best partners with the best products. As we offer a comprehensive portfolio of surfacing systems and have established and experienced construction teams and affiliations with renowned partners, we're confident that we have the best offering to lead your project from start to finish.

Thousands of programs have trusted the Tarkett Sports family because we treat every project like it's our own.

Let's build something amazing together.

IT STARTS WITH THE BEST PEOPLE

ASBA CERTIFIED FIELD BUILDERS

Eric Rice

Mitchell Truban
Professional Engineer

Lisa Rosauer

Jeff Yoos
Professional Engineer

ASBA CERTIFIED TRACK BUILDERS

Bryan Mitterling

Todd Grimes

Steve Hersom

Geoff Daley

ASBA CERTIFIED TENNIS COURT BUILDERS

Colin Donovan

POST-TENSIONING INSTITUTE

Cliff Null
Certified Level II Installer

Blaine Wilkins
Certified Level II Installer

CONSTRUCTION EXPERTS

Fritz Ballard
Professional Engineer, Certified General Contractor, Certified Erosion Control Inspector, Certified Level II Design Professional, Certified Professional – Erosion & Sediment Control, QSD / QSP

Rick Ediger
Vice-President Operations, Manufacturing & Field Operations

Michael Vincent
Vice-President Construction & Estimating

Travis Rice
Director of Design & Construction, Manufacturing & Field Operations

Chris Chisam
Registered Landscape Architect, LEED AP (Accredited Professional)

Greg Weisbrich
Construction Manager

Todd Bresee
Construction Manager

Francisco Vasquez

Tim Murphy
Professional Engineer

Cody Lytle
Professional Engineer

Chris Hulk
Professional Engineer

David Trevisonno
Junior Engineer

SUPPORTED BY LEADING MANUFACTURING EXCELLENCE

With leading manufacturing, experience, partners, and teams, we're in control of your project from start to finish. Everything is planned and created specifically for your installation.

As we're vertically integrated, we don't need to depend on others and can commit to an unwavering dedication to quality.

ISO 9001 certified for leadership in quality, environment, and safety management systems, Tarkett Sports' facilities in Calhoun (FieldTurf & Tarkett Sports Indoor), Chagrin Falls (Tarkett Sports Indoor), and Hunt Valley (Beynon Sports and Renner Sports) represent three of the most advanced manufacturing operations in the U.S.

With international manufacturing facilities in Auchel, Sedan (France), Narni (Italy), Abtsteinach (Germany), Bačka Palanka (Serbia) and Botany (Australia), Tarkett Sports showcases an extended network of production capabilities.

+$650M
IN CIVIL CONSTRUCTION CONTRACT VALUE SINCE 2015

+10 TARKETT SPORTS CERTIFIED PARTNERS

+16 OFFICE LOCATIONS ACROSS THE COUNTRY

+$20M IN-HOUSE INSTALLATION CAPABILITIES

+65 TARKETT SPORTS CERTIFIED INSTALLATION CREWS

+450,000 TONS OF DYNAMIC STONE BASE ANNUALLY
HEAVIER THAN THE EMPIRE STATE BUILDING

+40 TARKETT SPORTS CERTIFIED CIVIL PARTNERS

+120,000 LINEAR FEET OF CONCRETE CURB POURED PER YEAR
5X LONGER THAN THE LAS VEGAS STRIP

Data represents 2021 achievements.

WE'RE IN CONTROL FROM START TO FINISH

INSPECTION, DESIGN & PLANNING

A great project starts with great planning. Our design team and partners are experts in helping you maximize your space and ensure your design meets all the local and national sport regulations. From line color to field orientation and bleacher placement, we're here to help.

Before we start your project, our team reviews the site to ensure it meets all the requirements for:

- Soil and environmental requirements
- Stormwater regulations & management
- Geotechnical investigations
- Concrete / area moisture levels for indoor installations

Once we've checked all the boxes, we prepare a detailed project and engineering plan with our design team and trusted partners.

CIVIL CONSTRUCTION

Once the planning phase is approved, we start on preparing your site for the new surface. Our process:

- **DEMOLITION:** The existing area material is removed following the geotechnical results and a thorough inspection is completed to uncover any plumbing, electrical, or hidden utilities.
- **SUB-BASE:** The sub-base is built back up to the subgrade to lay the foundation for the installation.
- **CURBS:** The adequate curbing is installed across the site.
- **DRAINAGE:** The necessary stormwater drainage and collection systems are installed and connected.
- **LASER GRADING:** Prior to the surface system installation, the base is laser graded to ensure precision and proper site drainage.

SURFACING

We offer a comprehensive portfolio of sports surfacing solutions through our renowned brands. Installation is our secret sauce though. Don't underestimate the value of an experienced installation crew. Quality materials can only go so far. The success of your installation greatly relies on the installation team's execution.

ANCILLARY AREAS

Our team can help with more than just the sports surfacing. We can help plan and build walkways, athlete zones, parking areas and more.

EQUIPMENT & MAINTENANCE

Not only can we offer you a world-class surface, but we can also equip your facility from top to bottom.

We can help supply:

- Lighting & fencing
- Smart field & track technology
- Maintenance equipment
- Sports equipment

THE SOLUTION FOR YOUR ENTIRE PROJECT

From single-facility turf and track projects to colossal multi-application sports complexes, we have a comprehensive portfolio of surfacing systems to answer all your needs. The Tarkett Sports family showcases industry-leading brands specialized in their application.

Meet our family.

"Offering our clients a turnkey solution is at the core of our values. These projects are costly, complex, and important purchases for our clients. We pride ourselves on offering innovative products and value to our customers, all while making the entire process easy."

Eric Daliere, President – Tarkett North America & Tarkett Sports

FieldTurf® A Tarkett Sports Company

APPLICATIONS: Artificial Turf - Sports

PROJECTS: +25,000

SYSTEMS: Football, Soccer, Baseball, Softball, Rugby, Lacrosse, Field Hockey and Multi-Use

A leader in artificial turf, FieldTurf is the trusted choice of professional franchises, powerhouse collegiate programs, elite high schools and municipalities. FieldTurf systems have been proven to deliver leading performance and safety for over 20 years.

FieldTurf® LANDSCAPE A Tarkett Sports Company

APPLICATIONS: Artificial Turf - Landscape

PROJECTS: +50,000

SYSTEMS: Residential, Commercial, Playgrounds and Hospitality

Composed of leading residential brands EasyTurf, UltimateGrass & Zerolawn as well as FieldTurf Commercial, our FieldTurf Landscape entity offers renowned systems and expertise for residential and commercial applications. From a local backyard to a hotel rooftop, FieldTurf Landscape has a leading solution to offer.

BEYNON® A Tarkett Sports Company

APPLICATIONS: Running Track

PROJECTS: +6,500

SYSTEMS: Outdoor track, indoor track, hydraulic banked track, permanent banked track and gymnasiums

Beynon Sports is the premier choice for track & field surfacing. With the most World Athletics Certified Class I Facilities in the U.S., Beynon Sports is the trusted choice of Hayward Field, powerhouse collegiate programs, elite high schools and municipalities. Beynon Sports' specialized high-performance synthetic athletic surfaces are designed for speed, competition, and daily training.

renner® A Tarkett Sports Company

APPLICATIONS: Running Track, Racquet Court and Base Construction

PROJECTS: +6,000

SYSTEMS: Running track, tennis court, pickleball court and post-tensioned concrete base construction

Renner Sports has specialized in tennis courts, track surfacing and base construction for over 30 years. Leaders in post-tensioned concrete, Renner's experience and expertise delivers an unmatched quality and experience.

GRASSMASTER By Tarkett Sports

APPLICATIONS: Hybrid Turf

PROJECTS: +800

SYSTEMS: Football, Soccer, Rugby, Field Hockey, and Multi-Use

Inventors & pioneers of hybrid turf, GrassMaster is the most trusted brand in the industry. With over 800 pitches installed worldwide, GrassMaster has been the partner of choice for over 30 years from top clubs to local municipalities, regardless of the sport.

Tarkett SPORTS INDOOR

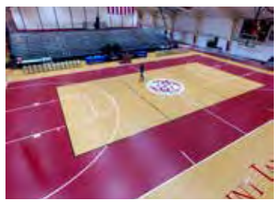

APPLICATIONS: Athletic Flooring

PROJECTS: +5,000

SYSTEMS: Basketball, volleyball, badminton, gymnasiums, fitness and dance

Tarkett Sports Indoor offers leading surfacing systems for athletic flooring. Leaders in vinyl, wood and polyurethane, Tarkett Sports Indoor can help provide the right flooring solution and design. The systems are certified by leading institutions for air quality and sustainability. Designed for performance, safety and easy maintenance, Tarkett Sports Indoor delivers an unmatched surface experience.

Tarkett SPORTS CONSTRUCTION

APPLICATIONS: Civil construction

SYSTEMS: Base construction, walkways, parking areas and most ancillary facility areas.

Tarkett Sports Construction helps bring your facility to life. Offering leading civil construction expertise and experience, our team helps lead and guide your project from start to finish. From you sport field to walkways and more, Tarkett Sports Construction has the knowledge and proven results to deliver true value for your program.

Tarkett

APPLICATIONS: Education, Commercial & Residential

SYSTEMS: Meeting Rooms, Auditoriums, Dining Services, Res Life Spaces, Libraries, Administration, Offices, Locker Rooms, and more

For nearly 140 years, Tarkett has been a leader in innovative flooring and sports surface solutions. From vinyl, linoleum and rubber to carpet and laminate, Tarkett products support safe, durable and inspiring environments where students and faculty can thrive.

TRUSTED FROM COAST TO COAST

As a leading choice in the National Football League, Major League Soccer, professional baseball and leading NCAA Division I, II and III programs, Tarkett Sports showcases experience and proven success with a wide variety of project scopes.

> *Absolutely amazing effort! These guys worked nights, weekends, holidays, in the rain and in the cold to finish the schedule as they promised. Like our team, they are committed to excellence!"*
>
> **Christopher Crenshaw**
> Associate VP for Facilities, Planning & Management – Southern Mississippi University

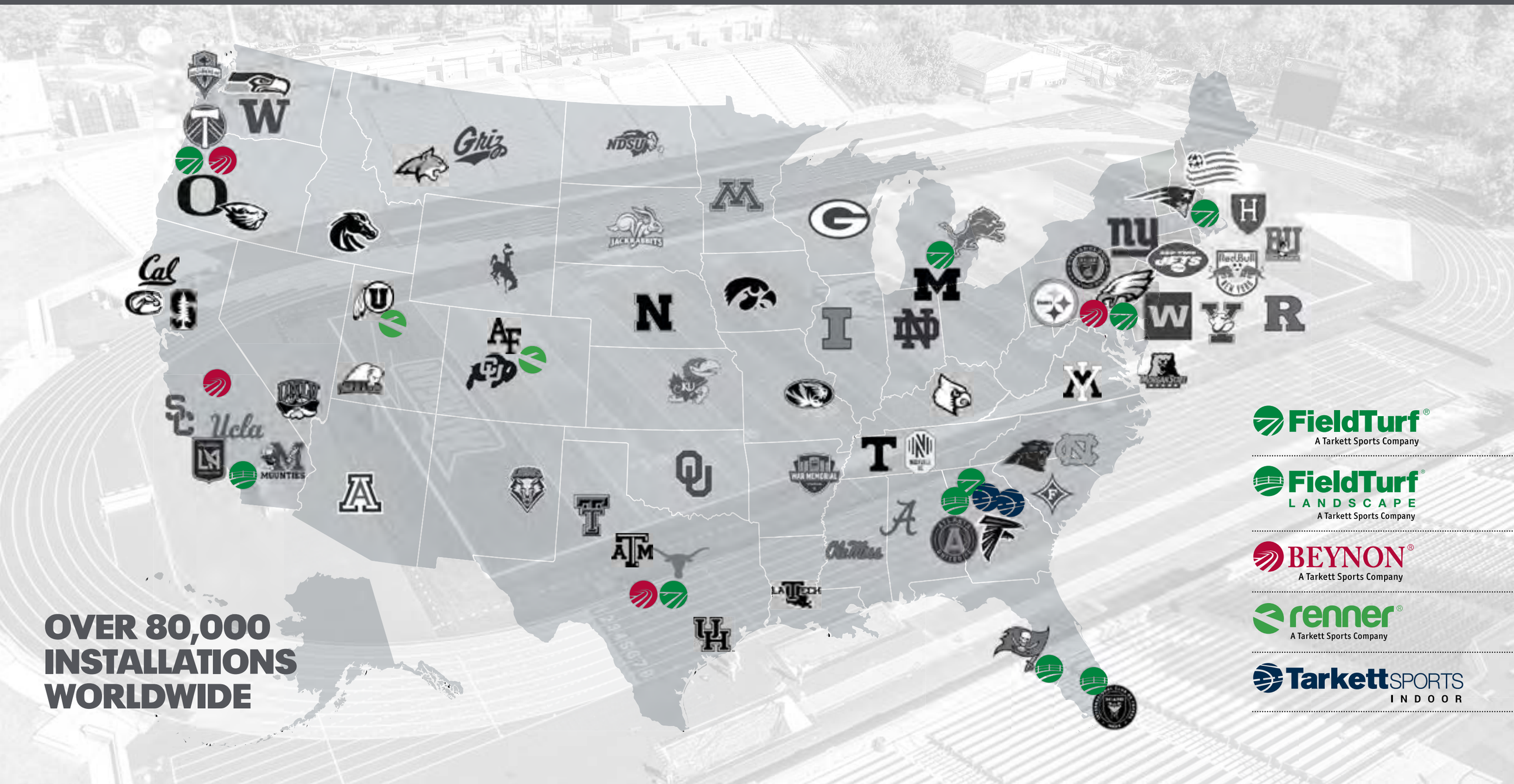

OVER 80,000 INSTALLATIONS WORLDWIDE

FieldTurf® A Tarkett Sports Company

FieldTurf® LANDSCAPE A Tarkett Sports Company

BEYNON® A Tarkett Sports Company

renner® A Tarkett Sports Company

Tarkett SPORTS INDOOR

AT THE SURFACE OF THE COUNTRY'S MOST ELITE PROGRAMS

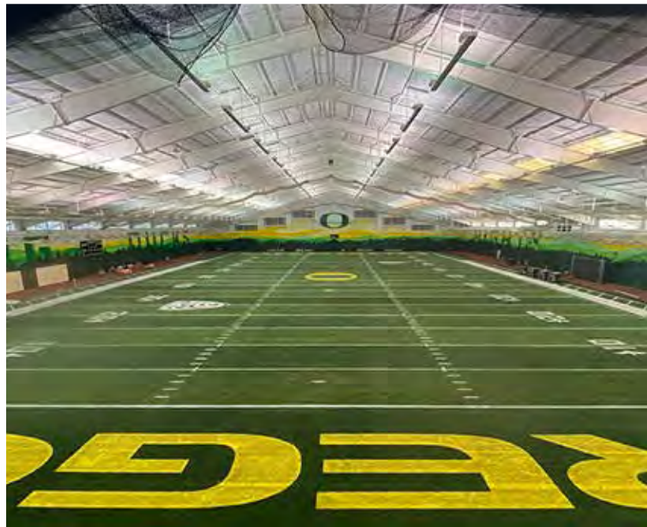

FEATURED PROJECT

"As far as Tarkett, we felt like they provided numerous years of experience. They have several projects that were very similar to ours that didn't have issues with them, and we felt like the variety and selection of the flooring they could provide, not only on the Omnisports™, but also in the FieldTurf realm, as well as the rubber sheet goods that we used in our fitness center, the multitude of color choices, selections, and product choices they have were a tremendous fit for our facility. I would encourage anybody to strongly consider using the Smart Buy program as well as Tarkett."

Dennis Dovel
PARKS AND RECREATION DIRECTOR

BLUE SPRINGS FIELD HOUSE

Location: Blue Springs, Missouri
Year: 2015
Company: Tarkett Sports Indoor, FieldTurf
Value: +$400,000
Products:

- Basketball court: Tarkett Indoor Omnisports™
- Aerobics area: Tarkett Indoor Clutchcourt Performance System
- Weight room: Tarkett Indoor Dropzone Comfort
- Indoor soccer field: FieldTurf Prestige XT

FEATURED PROJECT

SADDLEBACK COLLEGE

Location: Mission Viejo, California
Year: 2020
Company: Beynon Sports, FieldTurf
Value: +2,500,000
Products:

- Project: Design-Assist
- Outdoor track facility: Beynon BSS 2000 system
- Stadium: FieldTurf Revolution 360
- Soccer field: FieldTurf Revolution 360
- (2) Practice fields: FieldTurf Revolution 360

FEATURED PROJECT

"I would like to thank Beynon Sports Surfaces for the design, building, and installation of this world-class facility. This is one of the greatest facilities in the world and far exceeds our expectations. The craftsmanship and finished product is in a class of its own, resulting in a facility that will benefit present and future Michigan student-athletes for many years to come."

Jerry Clayton
HEAD COACH, MEN'S TRACK & FIELD
UNIVERSITY OF MICHIGAN

UNIVERSITY OF MICHIGAN

Location: Ann Arbor, Michigan
Year: 2019
Company: Beynon Sports, FieldTurf
Products:

- Indoor Track facility: Beynon Rise-N-Run hydraulic banked & BSS 1000 system
- Outdoor track facility: Design-Assist
- Outdoor track facility: Beynon BSS 1000 system
- Football stadium: FieldTurf Revolution 360
- Lacrosse facility: FieldTurf Revolution
- Indoor fieldhouse: FieldTurf Revolution 360
- Recreation Field: FieldTurf FieldTurf Prestige XT

FEATURED PROJECT

GREEN VALLEY RECREATION PICKLEBALL CENTER

Location: Green Valley, AZ
Year: 2020
Awards: 2020 ASBA - Distinguished Facilities Outdoor Pickleball Courts
Company: Renner
Value: +$540,000
Products:

- (24) pickleball courts: Renner Classic Pickleball
- Base: Renner post-tensioned concrete
- Court fencing
- Facility accessories

FEATURED PROJECT

CITY OF BILLINGS PARK & REC – AMEND PARK

Location: City of Billings, Montana
Year: 2020
Company: FieldTurf
Value: +$1,500,000
Products:

- Soccer field: FieldTurf Vertex Prime
- Base construction
- Lighting
- Walkways

FEATURED PROJECT

ABILENE INDEPENDENT SCHOOL DISTRICT

Location: Abilene, Texas
Year: 2019
Company: Beynon Sports, FieldTurf
Value: +12,000,000
Products:

- Shotwell Stadium: FieldTurf Prestige Vertex
- Abilene High School: Prestige Vertex (football), FieldTurf XT (Baseball & Softball Infields)
- Cooper High School: Prestige Vertex (football), FieldTurf XT (Baseball & Softball Infields)
- Track facility: Beynon BSS 300 system
- Grandstands
- Restrooms, Concession Stands, Lighting

START BUILDING YOUR DREAM

THE TARKETT SPORTS FAMILY – LEADERS IN SPORTS SURFACING

FieldTurf® A Tarkett Sports Company | BEYNON® A Tarkett Sports Company | renner® A Tarkett Sports Company | Tarkett SPORTS CONSTRUCTION | Tarkett SPORTS INDOOR | FieldTurf® LANDSCAPE A Tarkett Sports Company | GRASSMASTER By Tarkett Sports

© Copyright 2022. FieldTurf USA, Inc. All Rights Reserved.

Tarkett SPORTS

800-724-2969

ClassicCourt

By Tarkett Sports

THE 50-YEAR COURT

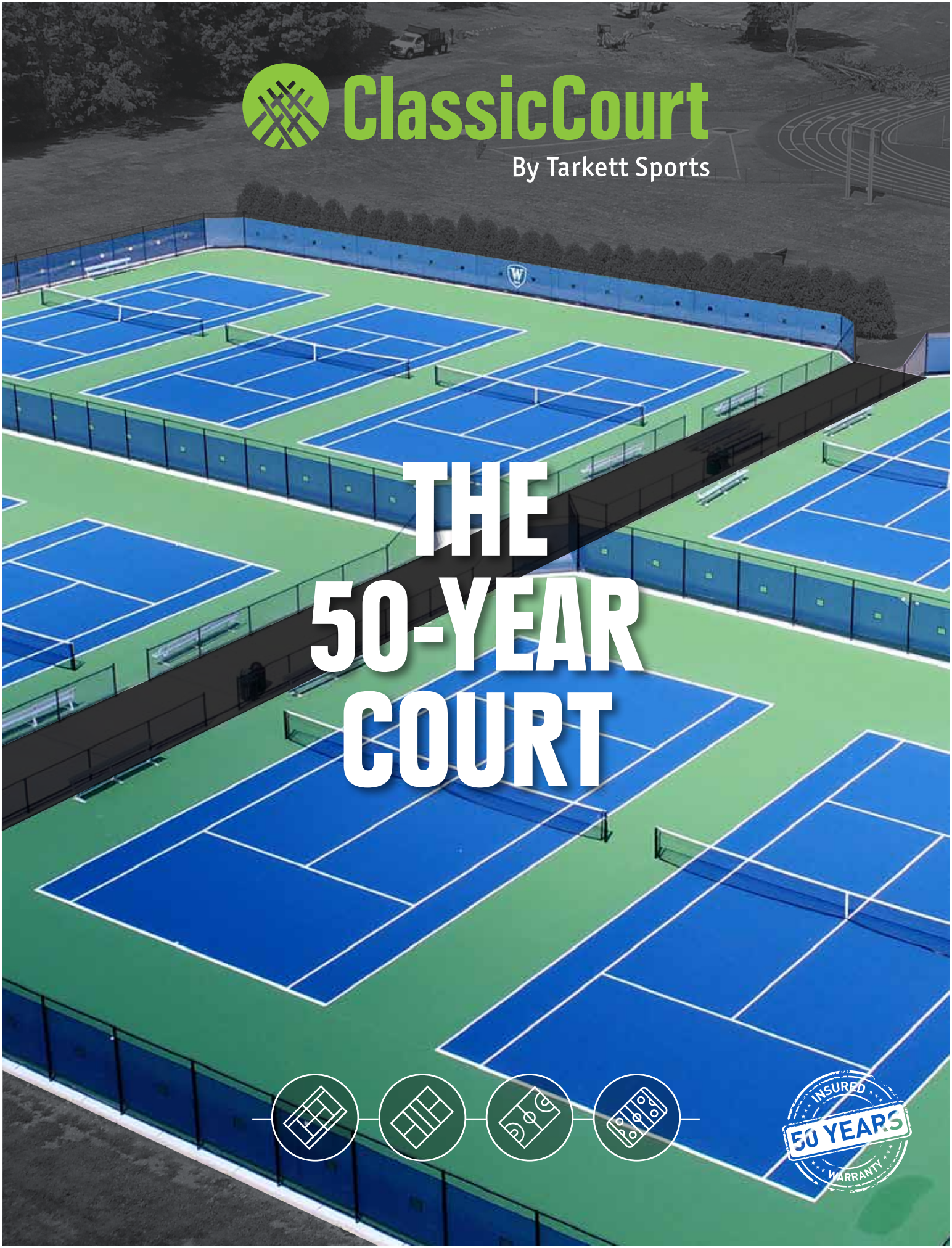

NOT ON PLANNING THE NEXT REPAIR

Post-tension concrete is a construction method that enhances durability and performance. It involves embedding high-strength steel cables within the concrete slab, which are then tensioned after the concrete has set. This technique reduces cracking, increases structural integrity, and minimizes maintenance compared to traditional asphalt or concrete.

BENEFITS OF POST-TENSION CONCRETE:

- Provides a strong foundation, even over unstable soils.
- Increases resistance to settling and heaving.
- Eliminates weak spots around nets and fence posts.
- Improves uniformity of play
- Maintains proper drainage to prevent ponding.
- Can be built over old asphalt courts, reducing costs and downtime.

MOISTURE-RESISTANT, PRECISION-LEVELED, AND BUILT TO LAST

A world-class court begins with a foundation that seamlessly blends precision and strength. Our state-of-the-art post-tension concrete system, ClassicCourt, is engineered to deliver consistent performance and unmatched durability. **Let's explore its design:**

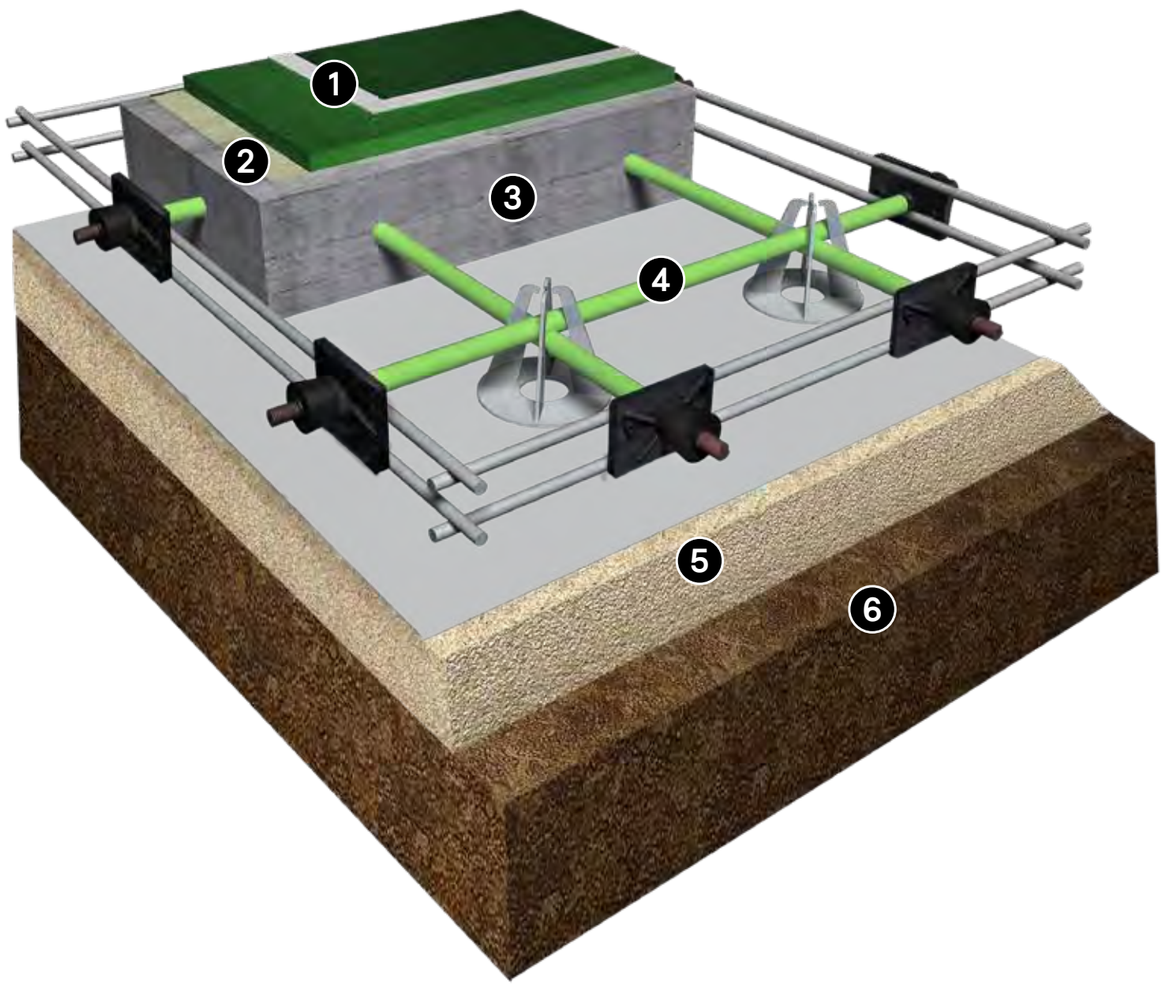

THE STAGES TO A WORLD-CLASS COURT

ACRYLIC SURFACING SYSTEM

Choose from a range of premium acrylic surfacing products, tailored to your desired ITF Pace Rating and performance requirements.

DIAMOND COATING – CLASSICCOURT EXCLUSIVE

Application of a proprietary, patent-pending breathable liquid vapor barrier, engineered to enhance adhesion of water-based acrylics. This extends the lifespan of the court while reducing maintenance costs.

POST-TENSION CONCRETE SLAB – 50-YEAR WARRANTY

Once poured and tensioned, the concrete slab remains under constant compression. This allows it to 'float' over the subgrade rather than being rigidly anchored, absorbing ground movement and preventing shifting, settling, and cracking.

POST-TENSION CABLES – MADE IN USA

ClassicCourt uses high-performance 1/2" U.S. steel cables fabricated with virgin grease, powder-coated hardware, and an exclusive blue sheathing exceeding 50 mils in thickness for superior corrosion protection.

AGGREGATE & LINER

A precisely engineered aggregate base creates a stable and level platform, improving drainage and ensuring a perfectly uniform playing surface. A high-quality liner is placed on top to enhance moisture control, prevent material migration, and provide additional stability for long-term performance.

COMPACTED SUBGRADE OR EXISTING ASPHALT COURT

ClassicCourt can be installed on a new subgrade or an existing aged asphalt or concrete court. This flexibility reduces demolition costs and accelerates installation, saving costs and minimizing venue downtime.

REST EASY, YOU'RE COVERED

INSURED 50 YEARS WARRANTY

We stand behind our promise of quality with an industry-leading 50-year structural warranty on the concrete slab and a 10-year surfacing warranty.

ClassicCourt is more than a system—it's the guarantee of an expert dedicated to your project. Every court is built with the supervision of a Post-Tensioning Institute (PTI)-certified professional, delivering world-class quality and performance.

HALL HIGH SCHOOL, CT

TUFTS UNIVERSITY, MA

GINTY PICKLEBALL COURTS, NJ

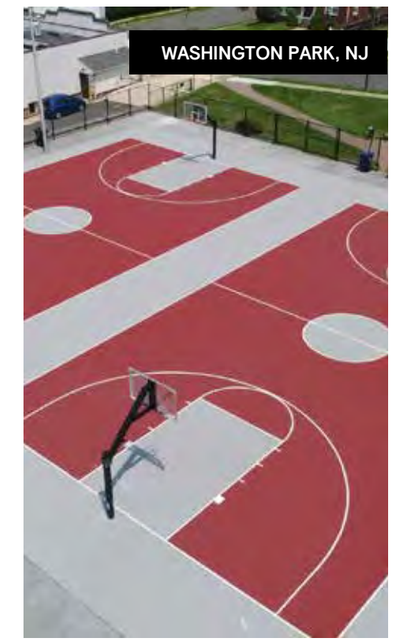

WASHINGTON PARK, NJ

VASSAR COLLEGE, NY

THE HOTCHKISS SCHOOL, CT

Tarkett SPORTS
FieldTurf® By Tarkett Sports
BEYNON® By Tarkett Sports
ClassicCourt By Tarkett Sports
Tarkett SPORTS INDOOR
GRASSMASTER By Tarkett Sports
Tarkett SPORTS CONSTRUCTION
Tarkett SPORTS DESIGN
AMPERE
ANCHOR MANAGEMENT GROUP
renner® A Tarkett Sports Company
CLASSIC TURF A Tarkett Sports Company
zaino® A Tarkett Sports Company
tarkettsports.com | 800-724-2969
© Copyright 2024. FieldTurf USA, Inc.
All Rights Reserved.

Play to win

CLUTCHCOURT

MFMA MEMBER MILL MANUFACTURER

WD

Tarkett SPORTS INDOOR

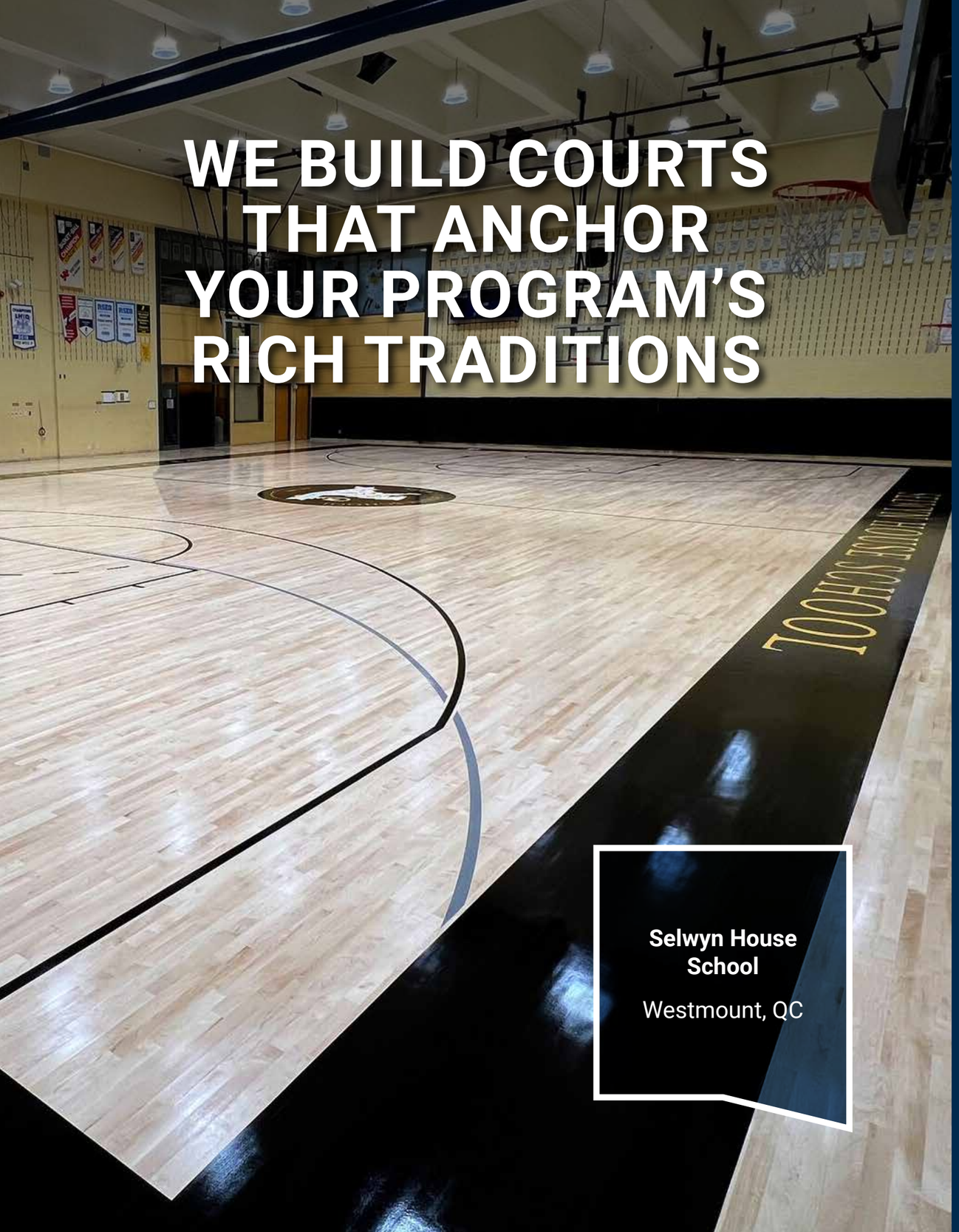

CLUTCHCOURT

Everything we do, and the way we do it, is aimed at making the process easier for you. We focus on ensuring your experience is memorable and hassle-free.

We understood long ago that a successful sports surface relies on a quality product installed by a quality team.

We've built our ClutchCourt series by combining the best systems with the best people and partners. You can trust the renowned quality of ClutchCourt and the extensive experience of our team.

The maple hardwood in our ClutchCourt Series is supplied exclusively by world-class producer, WD Flooring.

We're ready to partner on your next project.
Let's get started!

WD

WHY Tarkett SPORTS IS THE RIGHT CHOICE

TARKETT SPORTS IS A WORLD LEADER IN ATHLETIC SURFACING, OFFERING A COMPREHENSIVE PORTFOLIO OF INDOOR AND OUTDOOR SPORTS SURFACES. OUR MISSION: TO OFFER SUSTAINABLE SPORTS SURFACES THAT MAKE THE DIFFERENCE FOR ATHLETES.

TARKETT SPORTS BRAND

Tarkett Sports is a world leader in athletic surfacing, offering a comprehensive portfolio of sports flooring solutions through its brands: FieldTurf, Beynon Sports, Renner Sports, Tarkett Sports Construction, Tarkett Sports Indoor, FieldTurf Landscape, and GrassMaster.

EXPERIENCE

With over 10,000 installations in North America in the last 10 years, Tarkett Sports Indoor has the knowledge and expertise to make your sports facility a success.

DESIGN & CONSTRUCTION EXPERTS

Tarkett Sports and our partners are some of the most experienced and knowledgeable teams in the industry. We are the experts when it comes to the design and construction of your sports surface.

TRUSTED

Tarkett Sports Indoor offers some of the most trusted sports flooring solutions for a variety of applications and programs.

FINANCIALLY STRONG

The Tarkett Group is a worldwide leader of innovative flooring and sports surface solutions. Tarkett Sports Indoor is backed by unprecedented financial support and stability. You can rest easy.

ENDLESS PURSUIT OF INNOVATION

From ClutchCourt wood, PolyTurf Plus Pad & Pour polyurethane, Omnisports vinyl sports flooring, the Combi-Elastic System of Lumaflex, and LinoSport linoleum, our innovation and versatility extend beyond just sports. We're here to support your team.

LEADING DURABILITY

Manufactured and installed with the highest attention to detail, Tarkett Sports Indoor's systems showcase proven durability.

SERVICE

We are as committed to your program as you are, and we're with you for the long term. When you buy from Tarkett Sports, you're buying from a company that knows how to take care of you.

I can only speak amazing things about the newly installed ClutchCourt Performance floor at Golden Ticket Sports Centre in Moose Jaw, Saskatchewan. From a high-performance standpoint, it is unlike any floor we have played on. From the college and university athletes, all the way to grassroots youth - the floor does it all. In both look and performance, the floor sets us apart from other sport centres in Western Canada.

TANNER BRIGHTMAN
CEO/CO-OWNER
GOLDEN TICKET SPORTS

UNDERSTANDING SPORTS FLOORING

To help guide you to the right system for your facility, we rely on the independent sports flooring standard, ASTM F2772. This way, you can better evaluate and compare similar systems. Let's focus on the facts and cut out the noise.

HOW DOES THE SPORTS FLOORING STANDARD WORK?
It focuses on four critical areas:

1 FORCE REDUCTION (SHOCK ABSORPTION)

Force reduction (also called shock absorption) evaluates a surface's ability to reduce impact force. The standard has set a minimum value of 10% force reduction and categorizes the range into five Classes, of which Class 5 has the highest force reduction.

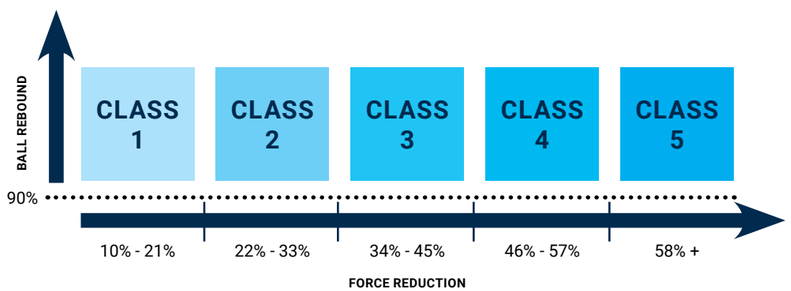

2 BALL REBOUND

Ball rebound (also called ball bounce) is a mechanical property that determines a surface's suitability for basketball. It is tested according to ASTM F2117 and accounts for two parameters: performance level (average performance of test points must reach a minimum of 90%) and uniformity level (test point deviation cannot exceed 3% of the average of all tests). Ball rebound is based on the responsiveness of a ball and its interaction with the surface. It is calculated by comparing the ball's rebound height on the sports surface to the rebound height of the same ball on concrete.

This area is evaluated on a pass-or-fail basis rather than with classes.

3 VERTICAL DEFORMATION

Vertical deformation values indicate the ability of the surface to deform under load. High deformation can affect the safety of the athlete, causing instability of the foot, while low deformation may cause injuries as a result of immediate impact force.

4 SURFACE FINISH EFFECT (FRICTION)

Surface finish effect describes a surface's response to a sliding foot, typically under dry conditions. It is tested according to ASTM E303 and accounts for two parameters: performance level (testing must achieve a value between 80-110) and uniformity level (individual tests cannot vary more than 4 points from the average value).

DEEPLY ROOTED IN QUALITY

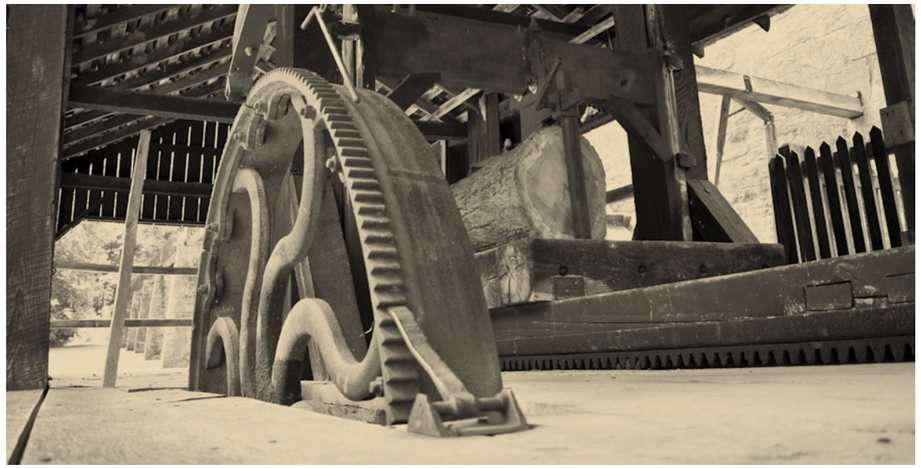

THE MAPLE HARDWOOD USED IN OUR CLUTCHCOURT SERIES IS SUPPLIED EXCLUSIVELY BY WORLD-CLASS PRODUCER WD FLOORING

For over 120 years, WD Flooring has embraced a meticulous selection process, sourcing their exceptional timber from the lush forests of Laona, Wisconsin. With thousands of acres under their careful management, each tree is hand-picked, ensuring that only the most exquisite materials grace your court. The pursuit of excellence extends beyond aesthetics, as WD Flooring is deeply committed to sustainability. The facility is fully committed to leaving no waste behind, embodying a harmonious synergy between quality craftsmanship and environmental responsibility.

WD Flooring, a proud member of the Maple Flooring Manufacturers Association (MFMA), is named in honor of William D. Connor. Widely known as W.D., he was not only a trailblazing lumberman but also served as the Lieutenant Governor of Wisconsin from 1906 to 1908. His pioneering spirit revolutionized milling and forestry practices, earning him a place of honor in both the MFMA and the Wisconsin Forestry Hall of Fame.

With five accolades under their belt as the 'Floor of the Year' by the National Wood Flooring Association (NWFA), WD Flooring continues to uphold the legacy of W.D. Connor by delivering top-quality hardwood flooring that is truly a cut above the rest.

MFMA MEMBER MILL MANUFACTURER

WD

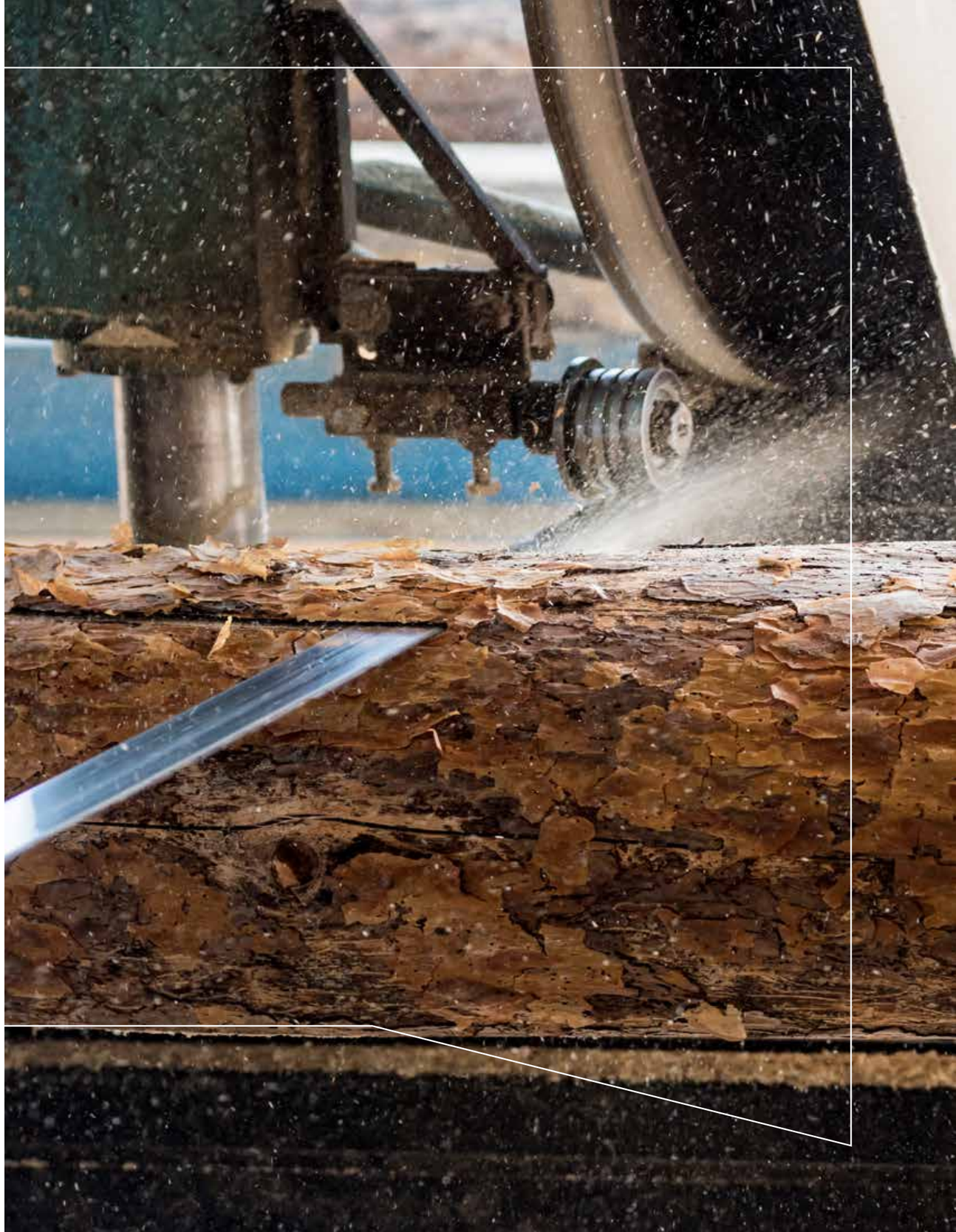

WHICH WOOD IS RIGHT For Your Project?

MAPLE HARDWOOD IS THE LEADING WOOD CHOICE FOR COURT SURFACING

Due to its dense and tight grain structure, hardwood maple is highly resistant to splintering or cracking, offering leading durability and aesthetics. The material exhibits natural antimicrobial properties, inhibiting the growth of microorganisms and making it a desirable choice for hygiene-sensitive environments.

The hardwood maple manufactured by WD Flooring is meticulously manufactured to meet the highest industry standards set by the MFMA.

The inherent beauty of a hardwood maple floor lies within natural characteristics, forging a deep connection between humanity and the splendor of nature. It is a visual feast that not only delights the eye but also resonates with the very essence of our shared existence with the natural world.

Being a natural product, hardwood maple exhibits natural color variations and markings such as knots, burls, and streaks which represent minerals absorbed from the soil and other beautiful characteristics. The grade of maple flooring, whether first grade, second grade, or third grade, is determined by the amount of color variation and character present on the wood's surface.

SELECTING THE RIGHT GRADING

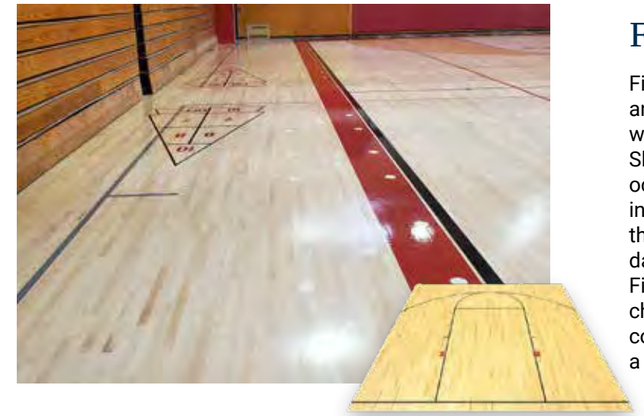

FIRST GRADE:

First grade maple adheres to the strictest appearance and quality standards. It must be free of defects that would significantly mar the finished floor's appearance. Slight natural color variations are allowed, along with occasional pinhole knots smaller than 1/8 of an inch in diameter, excluding ends or edges. Streaking from the bark is prohibited, and there is less tolerance for dark spots compared to second and third grade maple. First grade maple, with its bright appearance, is often chosen for professional arenas, televised sports, and competitive gyms at high schools and colleges, albeit at a higher price point.

SECOND GRADE:

The most popular option, second grade maple permits tight knots in the wood as long as they do not occur on the ends or edges of the boards. Natural variations such as dark spots and streaks are allowed, excluding heartwood, which may appear darker due to staining from minerals stored in the cambium of the wood.

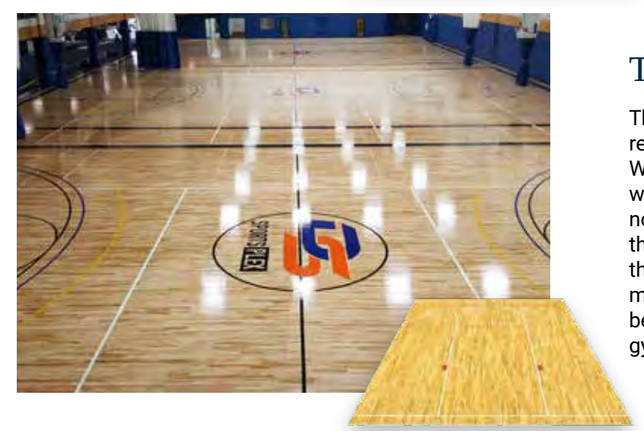

THIRD GRADE:

Third grade maple showcases natural variations, resulting, simply, in a more uniquely finished product. While it allows for all the natural nuances found in wood, the boards must still be structurally sound, with no voids on the ends or edges and no knot holes larger than 3/8 of an inch in diameter. Imperfections affecting the floorboard's serviceability are removed during the milling process. Many facilities opt for third grade maple because the natural variations add character to the gymnasium without impacting performance

A MASSIVE IMPACT YOU CAN FEEL GOOD ABOUT

NEW!

Our NEW VERT SERIES provides your program with a truly unique floor surface experience. VERT is revolutionizing your traditional hardwood court with an innovative design aiming to make a massive impact, without vibration.

VERT INNOVATION

FIGHTING BAD VIBES

MEET VERT
[VIBRATION ENERGY REDUCTION TECHNOLOGY]

By Mission V Sports, a patented engineered non-newtonian polymer pad applied to the bottom layer of the subfloor system. Available with all ClutchCourt VERT Series systems, the cushioning pads are designed to change their viscosity and flow behavior in response to pressure, helping respond quickly to force, dampening vibration in the floor while controlling the energy return to the athlete. Reducing shock before it enters the body is vital for an athlete's performance. VERT pads offer enhanced stability and load-bearing capabilities.

VERT PAD

VERT HEX PAD

US Patent No.: 10,174,509 • International Patent: PCT/US 2018/012024

- **UNMATCHED PLAYING COMFORT**
- **LEADING SAFETY & PERFORMANCE, ADDITIONAL BENEFITS FOR YOUTH & LIGHTWEIGHT ATHLETES**
- **LARGER, WIDER, & MORE ACCURATE AREAS OF COMPRESSION FORCE-DEFLECTION**
- **REDUCES MUSCULOSKELETAL FATIGUE VIA VIBRATION MITIGATION**

RESULTS THAT'LL PAD THE LEAD

VERT VIBRATION REDUCTION

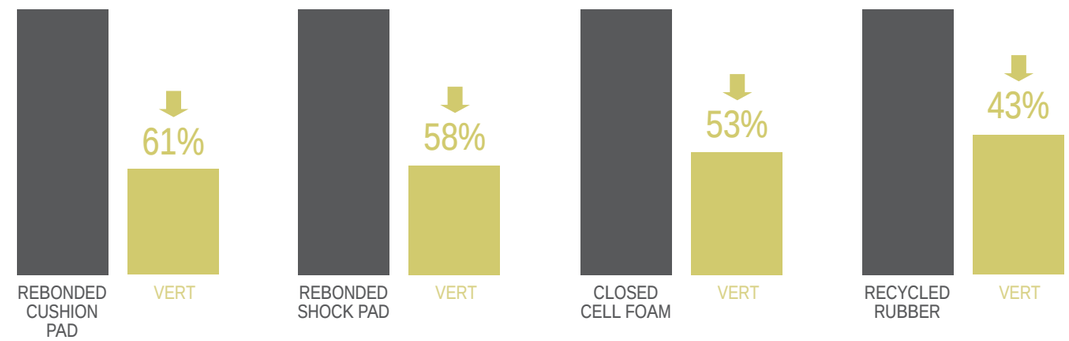

VERT ABSORBS VIBRATIONS 61% BETTER THAN REBONDED CUSHION PAD

VERT ABSORBS VIBRATIONS 58% BETTER THAN REBONDED SHOCK PAD

VERT IS 53% BETTER AT ABSORBING VIBRATIONS THAN CLOSED CELL FOAM

VERT IS 43% BETTER AT ABSORBING VIBRATIONS THAN RECYCLED RUBBER

VERT G-LOADING REDUCTION

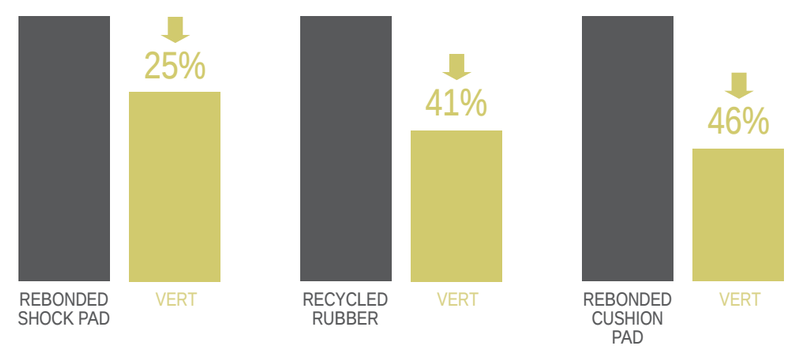

VERT IS 25% BETTER AT ABSORBING IMPACT THAN REBONDED SHOCK PAD

VERT IS 41% BETTER AT ABSORBING IMPACT THAN RECYCLED RUBBER

VERT IS 46% BETTER AT ABSORBING IMPACT THAN REBONDED CUSHION PAD

Test report #PN 161217. VERT testing: Akron Rubber Development Laboratory, Inc.

CLUTCHCOURT VERT Series

PERFORMANCE VERT

- Total System Profile: 2” or 2 1/4”
- Shock Pad: 1/4” or 1/2” VERT HEX

VERT HEX PAD

CLASS 5*

POWERFORWARD VERT

- Total System Profile: 2 1/2” or 2 3/4”
- Shock Pad: 1/4” or 1/2” VERT

VERT PAD

CLASS 5

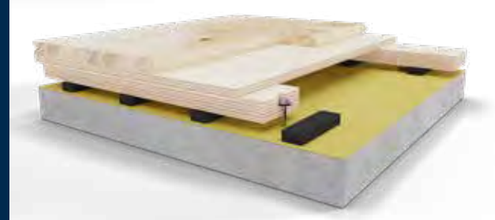

POWERFORWARD ANCHOR VERT

- Total System Profile: 2 1/2” or 2 3/4”
- Shock Pad: 1/4” or 1/2” VERT

VERT PAD

CLASS 5

TRAINER VERT

- Total System Profile: 3” or 3 1/4”
- Shock Pad: 1/4” or 1/2” VERT HEX

VERT HEX PAD

CLASS 3*

LP PANEL VERT

- Total System Profile: 2”
- Shock Pad: 1/4” VERT HEX

VERT HEX PAD

CLASS 4

LP PANEL ANCHOR VERT

- Total System Profile: 2”
- Shock Pad: 1/4” VERT HEX

VERT HEX PAD

CLASS 4

*Tested to meet ASTM F2772 Force Reduction Requirements – Tarkett Sports Indoor Testing.

Product images are for illustrative purposes only and are not an accurate representation of the actual product. As such, their size, colors and materials may vary.

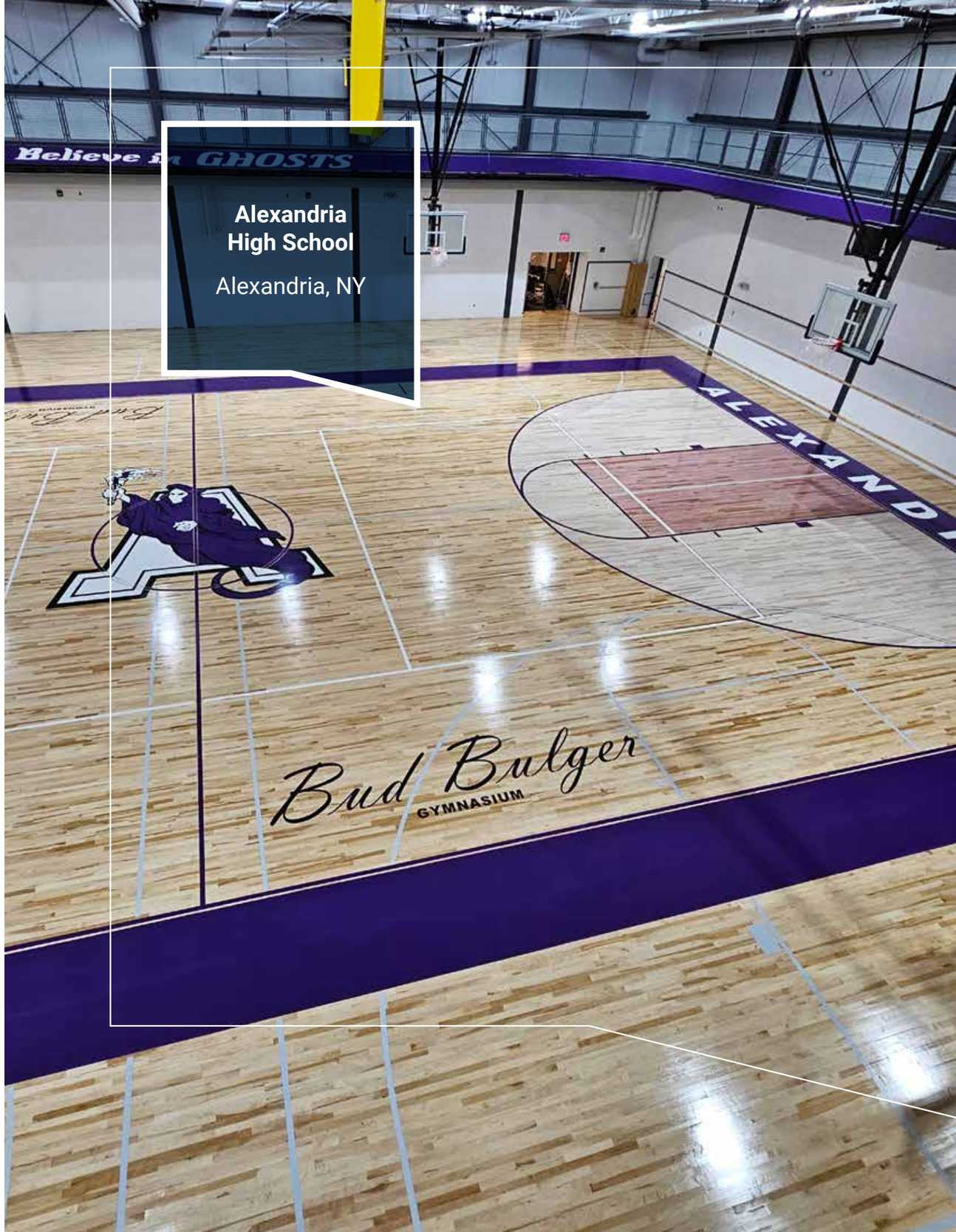

Alexandria High School

Alexandria, NY

CLUTCHCOURT Tradition Series

PERFORMANCE CORE

- Total System Profile: 2 1/2”
- Shock Pad: 3/4” CoreCushion
- MFMA PUR Compliant floor system - Industry-leading standard.

CLASS 5

PERFORMANCE ANCHOR

- Total System Profile: 2 1/2”
- Shock Pad: 3/4” CoreCushion
- Underside Self-Blocking System

CLASS 4

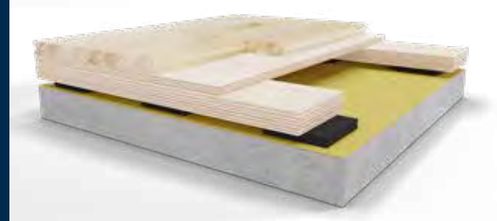

LP SLEEPER

- Total System Profile: 2 3/4”
- Shock Pad: 1/2” recycled rubber

CLASS 4

LP SLEEPER ANCHOR

- Total System Profile: 2 3/4”
- Shock Pad: 1/2” recycled rubber

CLASS 4

FLEXLOCK PANEL

PATENTED TECHNOLOGY

- Total System Profile: 2 1/2” or 2 3/4”
- Underlayment: 1/4” or 1/2” closed-cell resilient foom

CLASS 4*

TRAINER III

- Total System Profile: 2 1/8”
- Shock Pad: 3/8” Johnsonite rubber

CLASS 4**

*Tested to meet ASTM F2772 Force Reduction Requirements – Tarkett Sports Indoor Testing.
** System performance estimation according to traditional design. F2772 Certificate unavailable.

Product images are for illustrative purposes only and are not an accurate representation of the actual product. As such, their size, colors and materials may vary.

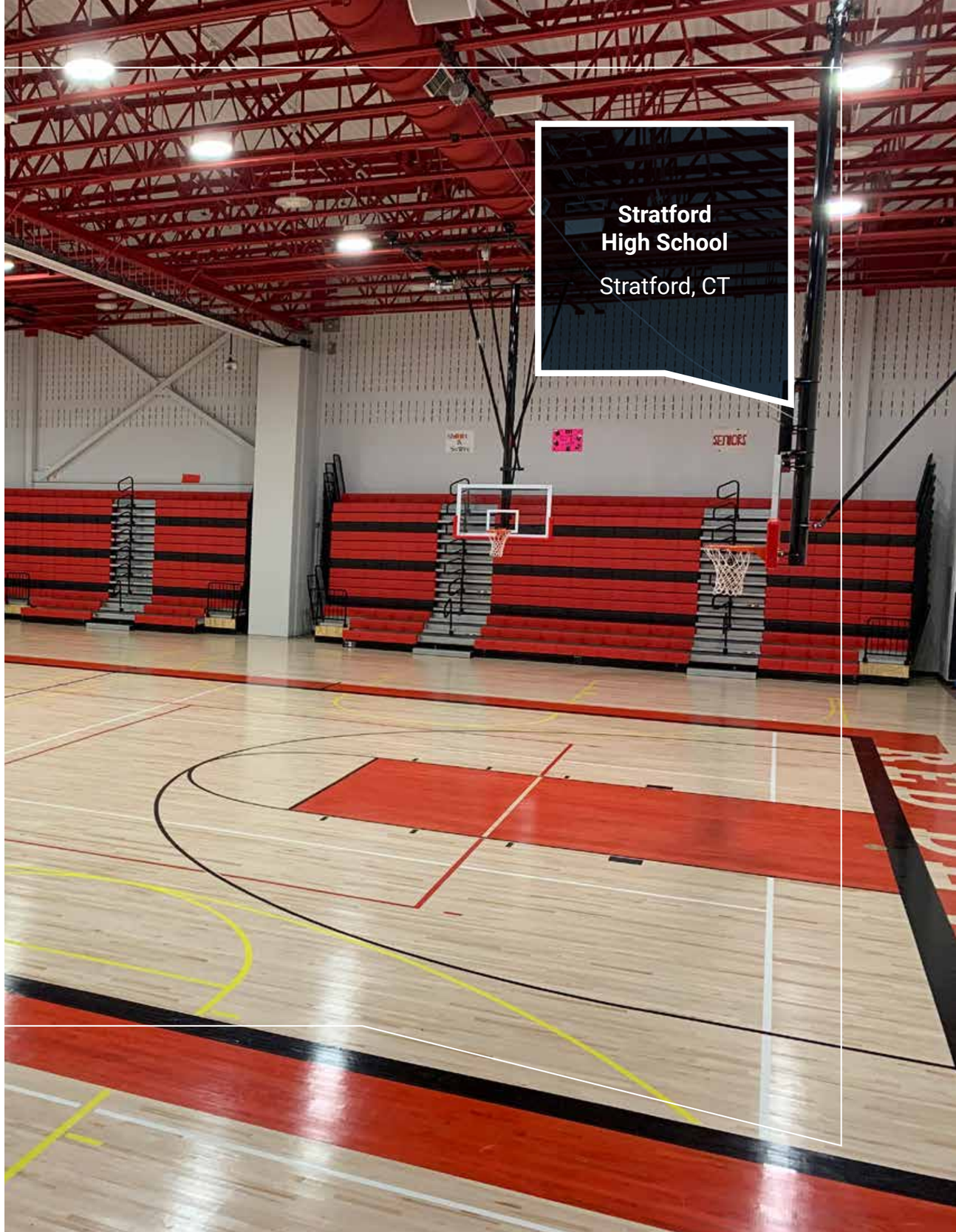

A COMPLETE PACKAGE PLAYER

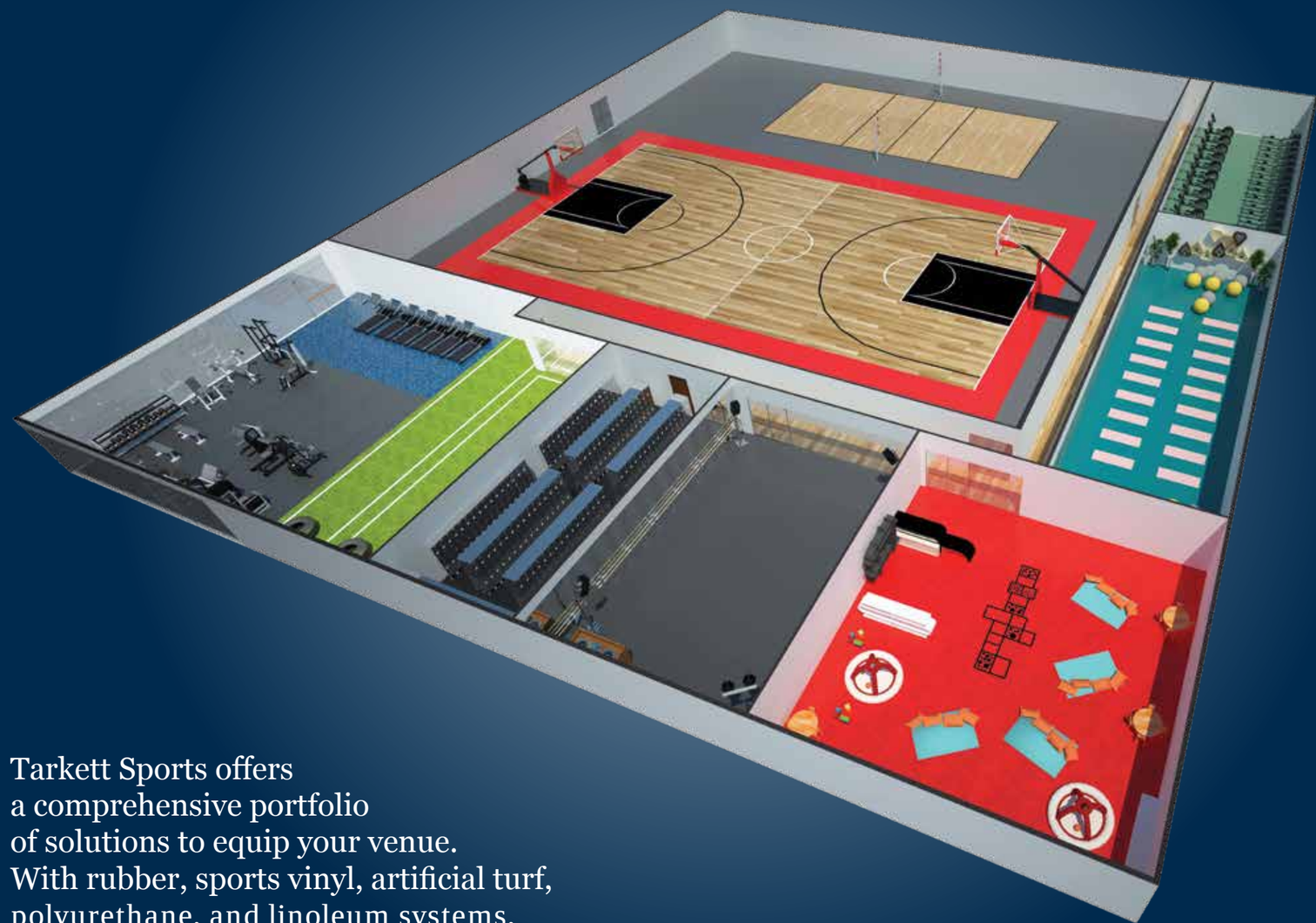

Tarkett Sports offers
a comprehensive portfolio
of solutions to equip your venue.
With rubber, sports vinyl, artificial turf,
polyurethane, and linoleum systems,
we offer your program a complete package.

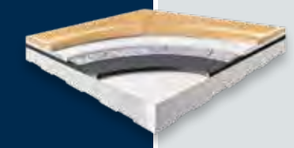

OMNISPORTS
SPORTS VINYL

Applications: Gymnasium • Daycare • Multi-Purpose Rooms • Cafetorium • Yoga • Martial Arts

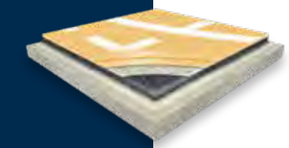

POLYTURF PLUS PAD & POUR
POLYURETHANE

Applications: Multi-Purpose Rooms • Cafetorium • Gymnasium • Inline Skating

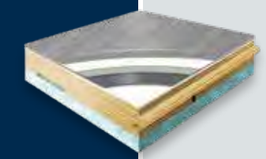

LUMAFLEX
COMBINATION SYSTEM

Applications: Gymnasium • Multi-Purpose Rooms • Inline Skating • Aerobic & Fitness

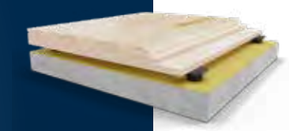

CLUTCHCOURT
HARDWOOD

Applications: Gymnasium (Basketball & Volleyball) • Aerobics • Racquetball

DROPZONE
RUBBER

Applications: Weight Rooms • Strength & Cardio Equipment • Spinning • Training Turf • Functional & Extreme Training • Ice Rinks

DANCEFLOOR
SPECIALTY VINYL

Applications: Dance Studio • Dance Stage

LINOSPORT
LINOLEUM

Applications: Multi-Purpose Rooms • Gymnasium • Daycare

DROPTURF
SYNTHETIC TURF

Applications: Recreation & Fitness

BUILDING FOR TOMORROW

OUR SUSTAINABILITY COMMITMENT

That means our innovation isn't limited to product specs. Our promise to keep athletes safe on our surfaces has become our singular focus. In everything we do, we strive to completely eliminate its potential to harm, not just for people but for the environment too. Our commitment to creating safer surfaces means leading the industry in manufacturing indoor athletic flooring with the lowest impact on people and the planet—from Cradle to Cradle Certified™ products, to circular design, to the utmost care for those who play on and handle our products.

OUR CLUTCHCOURT SERIES IS DESIGNED USING FOREST STEWARDSHIP COUNCIL™ (FSC) ACCREDITED 100% MAPLE HARDWOOD

THE HEALTHIER CHOICE FROTHED POLYURETHANE USED IN OUR CLUTCH COURT FLEXLOCK SYSTEM IS CERTIFIED GREEN LABEL PLUS. PRODUCT COMPLIES WITH CALIFORNIA DPH SECTION 0135 VERSION 1.2

GOLD 2022 ecovadis Sustainability Rating

SAFER SURFACES

- BUILD RESPONSIBLY
- PROTECT THE ENVIRONMENT
- MINIMIZE WASTE
- SAFEGUARD ATHLETES

PROTECTING THE FUTURE OF PLAY

The power of sport has a global reach. It drives community development and collaboration, empowers youth and individuals, adds to health and education, and can help us create a more inclusive society.Through our Better Tomorrow Program, we partner with leading organizations building sport capacity, whether it's mentoring coaches or making the game more accessible, ensuring future generations continue to play.

GOOD SPORTS®

Partners with Good Sports, who helped equip over 500,000 kids in 2022.

"The Good Sports donation changed the trajectory of [their] lives and careers moving forward. With a donation from Good Sports, the girls were provided with new shoes and training equipment. They went on to make their high-school basketball teams and are now being looked at by colleges"

- SWOOPS HOOPS FOUNDATION, GEORGIA

Make-A-Wish® GEORGIA

Partners with Make-A-Wish® Georgia, helping grant wishes for exceptional kids in Georgia.

WOMEN LEADERS IN SPORTS

Women Leaders in Sports partners with prominent women in the sports world who develop, connect, and champion women to advance and be powerful influences in sports.

Tarkett Cares

Supported over 800 community initiatives with employees volunteering 3,500 days and almost 1.2 million dollars of product donations between 2017 & 2022 through our Tarkett Cares program.

PLAY
TO WIN

THE TARKETT SPORTS FAMILY – LEADERS IN SPORTS SURFACING

FieldTurf® A Tarkett Sports Company | BEYNON® A Tarkett Sports Company | renner® A Tarkett Sports Company | Tarkett SPORTS CONSTRUCTION | Tarkett SPORTS INDOOR | FieldTurf® LANDSCAPE A Tarkett Sports Company | GRASSMASTER By Tarkett Sports

© Copyright 2024. FieldTurf USA, Inc. All Rights Reserved.

Tarkett SPORTS INDOOR

888-364-6541

tarkettsportsindoor.com

Play to win

OMNISPORTS

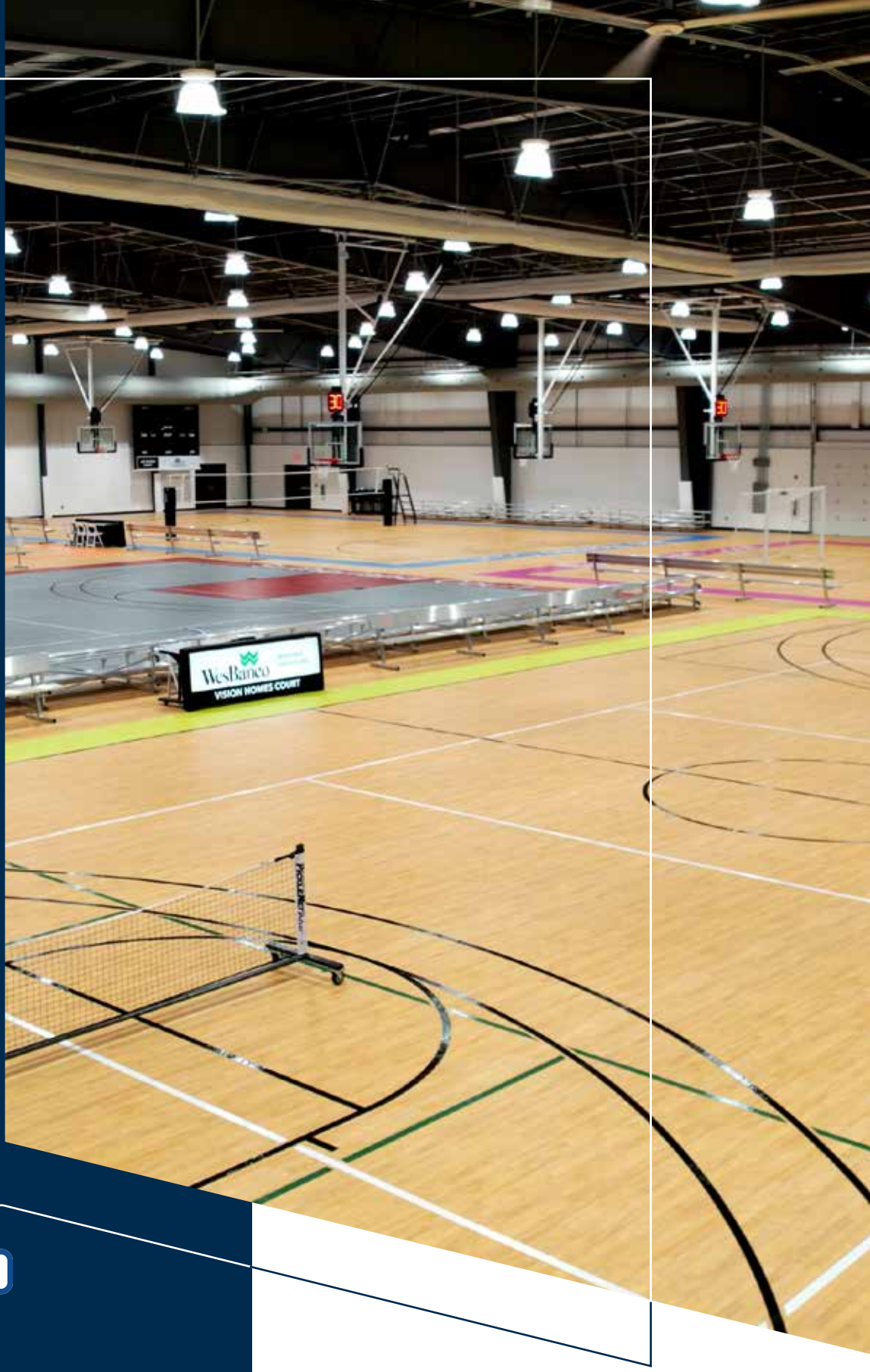

TARKETT SPORTS 25 YEARS WARRANTY

Tarkett SPORTS INDOOR

INDEX

WHY TARKETT SPORTS IS THE RIGHT CHOICE 4

WHY OMNISPORTS 6

DESIGNED FOR EASY MAINTENANCE 8

DESIGNED FOR DURABILITY 10

THE OPTIMAL SURFACE FOR ATHLETES 12

DESIGNED TO BE SAFE 14

TRUSTED AT ALL LEVELS 16

STANDARDS & CLASSES 18

OMNISPORTS RANGE 20

THE OMNISPORTS COLLECTION

- CLASS 1 SYSTEMS 22
- CLASS 2 SYSTEMS 24
- CLASS 3 SYSTEMS 26

UNLIMITED DESIGN POSSIBILITIES 30

INSTALLATION METHODS 32

SOLUTION GUIDE 34

TECHNICAL DATA 35

OMNISPORTS

Everything we do, and the way we do it, is aimed at making the process easier for you. We focus on ensuring that your experience is memorable and hassle-free.

We understood long ago that a successful sports surface relies on a quality product installed by a quality team. We've built our Omnisports Series by combining the best systems with the best people and the best partners. You can trust the renowned quality of Omnisports and the reputable experience of our team.

We're ready to get started on your next project.

WHY Tarkett SPORTS IS THE RIGHT CHOICE

TARKETT SPORTS IS A WORLD LEADER IN ATHLETIC SURFACING, OFFERING A COMPREHENSIVE PORTFOLIO OF INDOOR & OUTDOOR SPORTS SURFACES.

TARKETT SPORTS BRAND

Tarkett Sports is a world leader in athletic surfacing, offering a comprehensive portfolio of sports flooring solutions through its brands: FieldTurf, Beynon Sports, Renner Sports, EasyTurf, GrassMaster, PlayMaster, and Tarkett Sports Indoor.

EXPERIENCE

With over 10,000 installations in North America in the last 10 years, Tarkett Sports Indoor has the knowledge and expertise to make your sports facility a success.

DESIGN & CONSTRUCTION EXPERTS

Tarkett Sports and our partners are amoung the most experienced and knowledgeable teams in the industry. When it comes to the design and construction of your sports surface, we are the experts.

TRUSTED

Tarkett Sports Indoor offers some of the most trusted sports flooring solutions for a variety of applications and programs.

FINANCIALLY STRONG

As a part of the Tarkett Group, a global leader in flooring and sports surfaces, we benefit from unparalleled financial stability and support.

ENDLESS PURSUIT OF INNOVATION

From Dropzone rubber, PolyTurf Plus Pad & Pour system, Omnisports vinyl sports flooring, ClutchCourt wood, and LinoSport linoleum, our innovation and versatility extend beyond just sports.

LEADING DURABILITY

Manufactured and installed with the utmost attention to detail, Tarkett Sports Indoor's systems showcase proven durability.

SERVICE

We are as committed to your program as you are, and we're with you for the long term. When you select Tarkett Sports, you're trusting a company that knows how to take care of you.

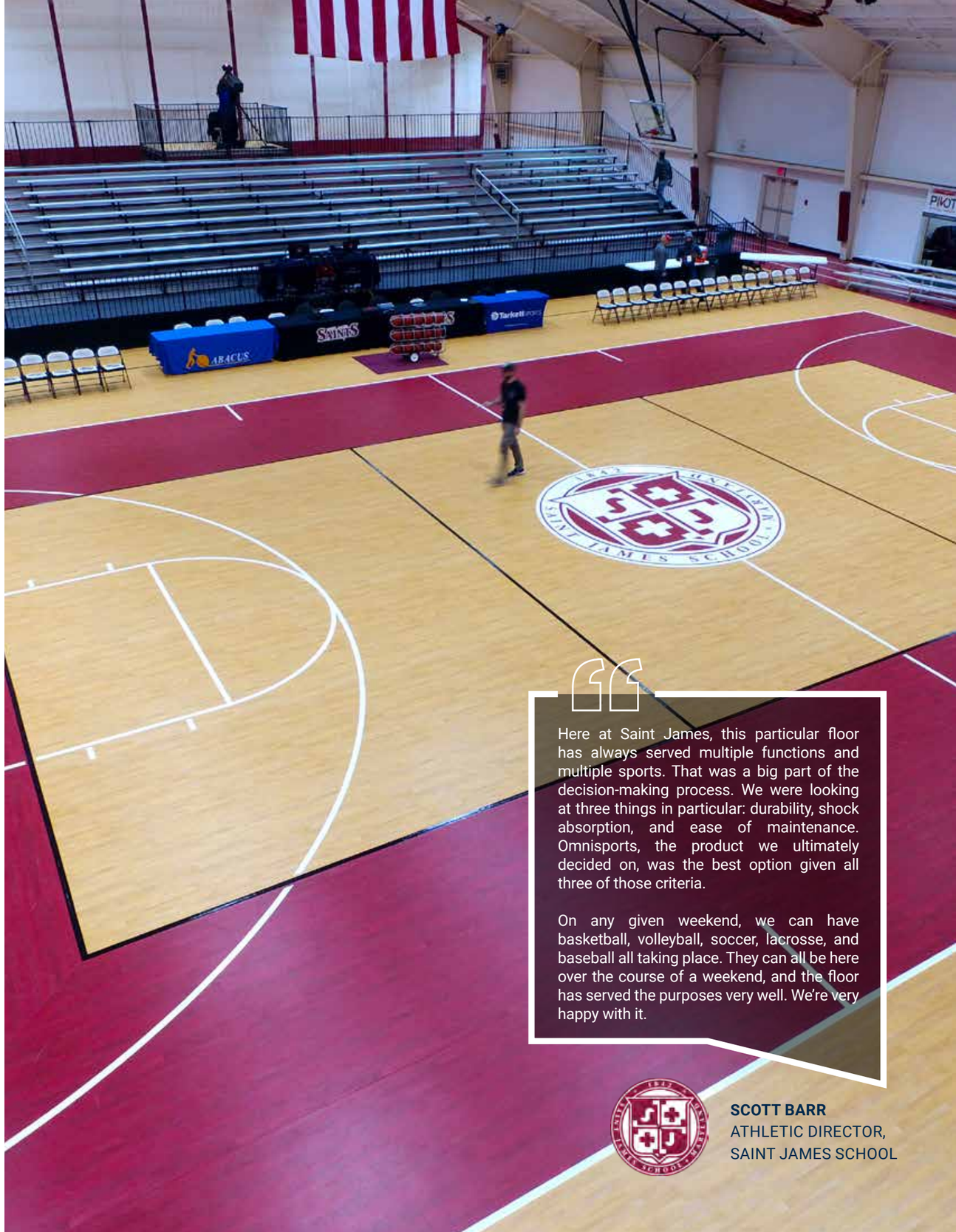

Here at Saint James, this particular floor has always served multiple functions and multiple sports. That was a big part of the decision-making process. We were looking at three things in particular: durability, shock absorption, and ease of maintenance. Omnisports, the product we ultimately decided on, was the best option given all three of those criteria.

On any given weekend, we can have basketball, volleyball, soccer, lacrosse, and baseball all taking place. They can all be here over the course of a weekend, and the floor has served the purposes very well. We're very happy with it.

SCOTT BARR
ATHLETIC DIRECTOR,
SAINT JAMES SCHOOL

WHY OMNISPORTS

ENGINEERED TO DOMINATE

DESIGNED TO IMPRESS

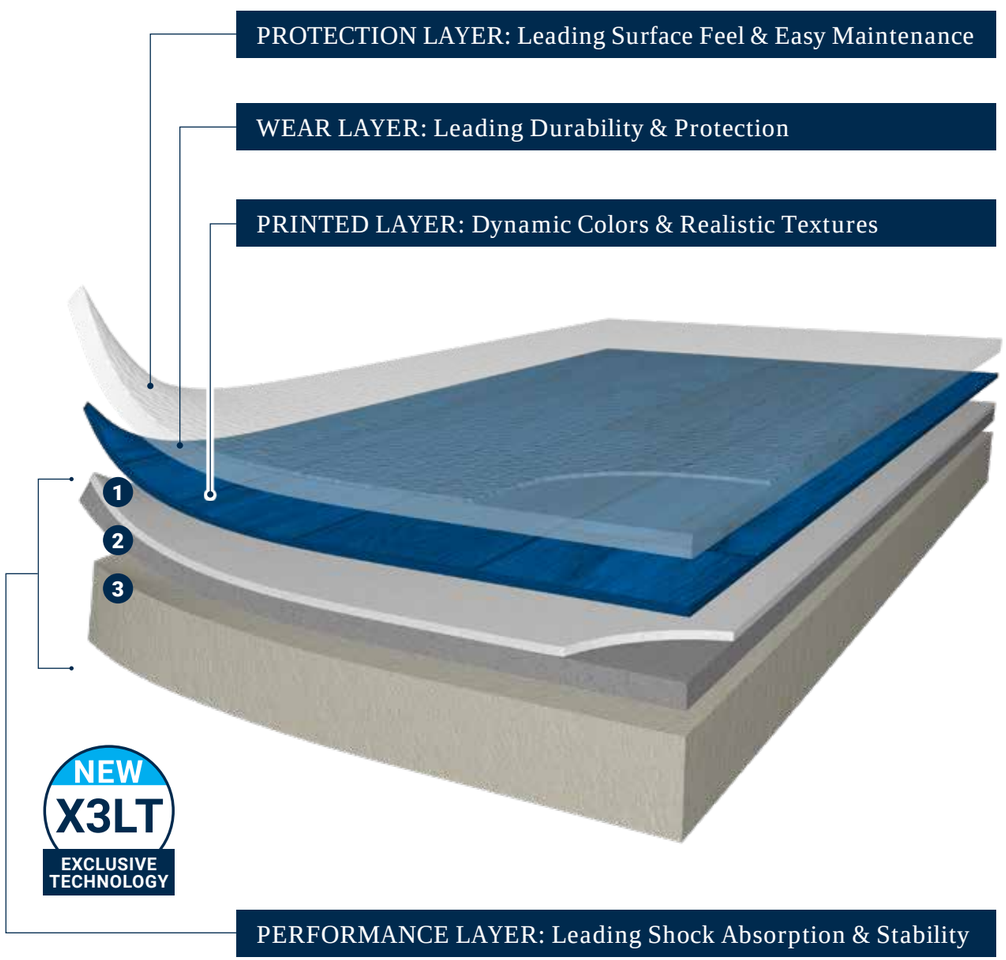

PROVEN HISTORY & REFERENCES

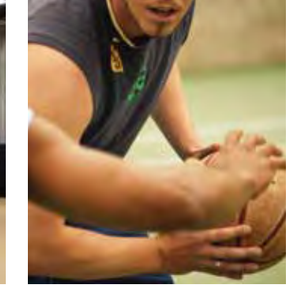

BUILT TO BE THE MUSCLE ON YOUR TEAM

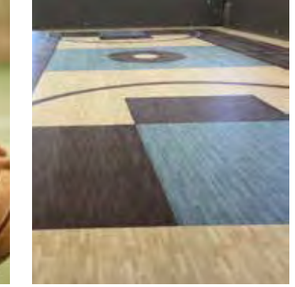

MADE TO STAND OUT WITH A VARIETY OF DESIGN OPTIONS

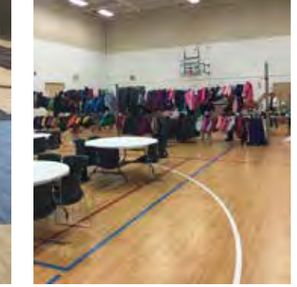

MULTIFUNCTIONAL SPORTS, RECREATION, ACTIVITIES, & MORE

YOU CAN FEEL THE DIFFERENCE

OMNISPORTS X3LT - XTREME 3-LAYER TECHNOLOGY

1 FIBERGLASS MESH
Less is more!
Extremely tough single fiberglass mesh reinforcement
2X
BETTER INDENTATION RECOVERY THAN SIMILAR PRODUCTS

+

2 CALENDERED SHEET
High performance & durability, made from recycled material
Up to
60%
RECYCLED CONTENT

+

3 XCS CUSHION
High expansion rate and recovery, fewer fillers for maximized performance
+12%
IMPROVED SHOCK ABSORPTION

UNRIVALED SPORTS EXPERIENCE

Our XCS aerated, high-cell density cushion offers enhanced comfort while providing superior indentation recovery. The Performance Layer delivers excellent fatigue reduction, allowing athletes to play longer and recover faster.

A WINNING COMBINATION

The magic happens when we combine our best features. Together, the XCS high-quality expanded cellular cushion, our durable, resilient calendered layer, and extremely tough fiberglass mesh provide improved sports performance and higher resistance to rolling and static loads than competitor systems.

DESIGNED FOR EASY MAINTENANCE

WASH, RINSE, & PLAY

Maintenance is that easy with Omnisports. Our systems are finished with our factory-applied polyurethane surface treatment, TopClean XP. The application delivers leading resistance to scratches, scuffs, stains, and abrasion. As the TopClean XP surface treatment inhibits microbial growth, the system reduces the possibility of bacteria and microorganisms building up on the surface.

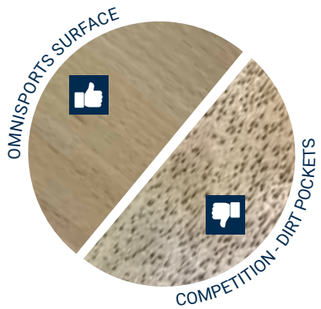

FREE OF DIRT POCKETS

The Tarkett Difference: Omnisports' unique single-surface embossing repels dirt, unlike some systems that trap dirt in surface pockets.

TABLES & CHAIRS, BRING IT ON

Omnisports systems provide exceptional resistance and recovery, even when accommodating various activities, including events with temporary equipment and furniture on the surface.

HIGHLY RESISTANT TO STAINS

Omnisports systems are engineered to deliver leading resistance to staining and footwear marks. Spills are easily cleaned, and the surface requires less maintenance.

LESS TIME CLEANING

Omnisports systems are easy to maintain, as they require mechanical cleaning no more than once a week. You could save up to 25% on your maintenance budget.

DESIGNED FOR DURABILITY

OVER
30%*

THICKER WEAR LAYER

VS LEADING COMPETITOR SYSTEMS

*Based on ASTM F1303 standard

Our Omnisports vinyl wear layer delivers long-lasting protection for unmatched value.

30% thicker than the leading competitor systems and made of pure polyvinyl chloride (PVC), Omnisports' wear layer provides excellent floor protection and is backed by a leading 25-year warranty.

TARKETT SPORTS 25 YEARS WARRANTY

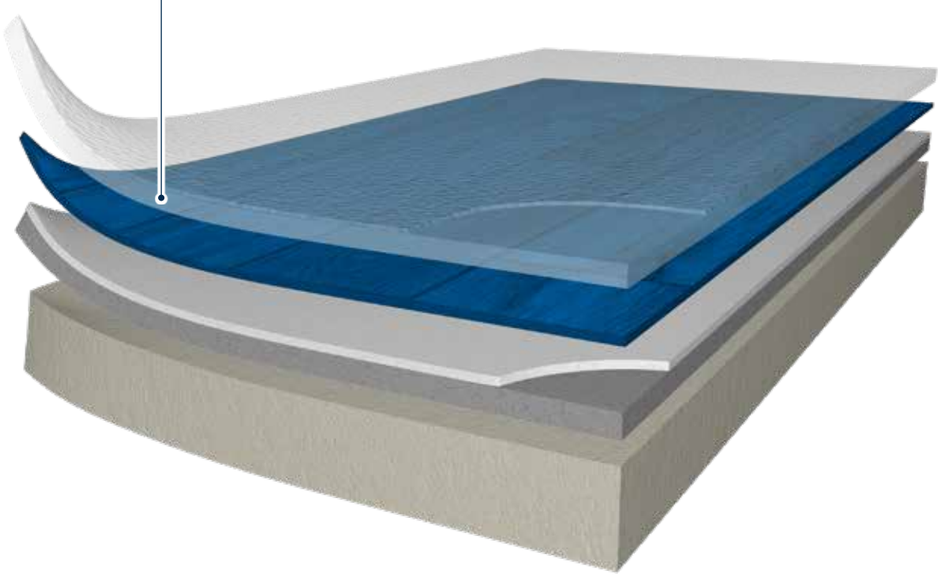

MEASURE YOUR WEAR LAYER CORRECTLY

The wear layer is the portion of a resilient floor covering that contains or protects the pattern effect. With a thin wear layer, your surface could quickly show signs of wear and damage. Tarkett Sports relies on ASTM F1303, a leading industry standard, to define its wear layer thickness. Some manufacturers include additional layers as a part of their wear layer calculation. Be sure to use identical methods when comparing systems.

HOW TO MEASURE WEAR LAYER THICKNESS AND WHAT DEPTH IS ENOUGH?

- Rely on independent testing standards – We recommend ASTM F1303 testing
- Select the proper type and grade for your facility
- Be cautious of manufacturers advertising thicknesses based on "internal" testing
- Ask for and read the full details of the warranty of your wear layer
- An inadequate wear layer could lead to premature damage to your surface

WEAR LAYER DEFINITION ASTM F1303 VS OTHER METHODS

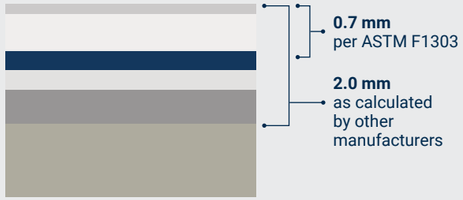

MAKE SURE YOU'RE COMPARING THE IDENTICAL METHODS

	OMNISPORTS ACTIVE+	COMPETITOR SYSTEM	DIFFERENCE
Wear layer per ASTM F1303	0.7 mm	0.5 mm	+40%
Wear layer as calculated by other manufacturers	2.0 mm	2.1 mm	-5%

ASK IF YOUR SYSTEM IS DESIGNED FOR COMMERCIAL USE

Rely on the Standard for Sheet Vinyl Flooring - ASTM F1303 testing

TYPE	GRADE	WEAR LAYER THICKNESS (MM)	INTENDED USE	RECOMMENDED FOR SPORT APPLICATIONS
Type 1 (Min. 90% PVC binder content)	Grade 1: >0.51mm	0.51	Residential / Commercial / Light Commercial	✔
Type 1 (Min. 90% PVC binder content)	Grade 2: 0.51mm><0.36mm	0.36	Residential / Light Commercial	✘
Type 1 (Min. 90% PVC binder content)	Grade 3 0.36mm><0.25mm	0.25	Residential	✘

THE OPTIMAL SURFACE For Athletes

COMFORT & PERFORMANCE

WORLD-CLASS FEELING UNDERFOOT

Leading Shock Absorption

Our XCS aerated, high-cell density cushion delivers leading shock absorption, comfort, and indentation recovery. The engineered cushioning technology also assists with excellent fatigue reduction, allowing for longer and safer play at both recreational and competitive levels.

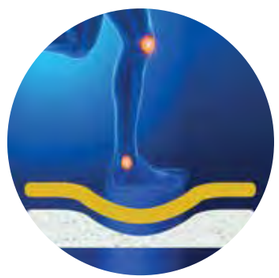

LESS IMPACT ON THE BODY

Leading Energy Return

XCS's high-quality expanded cellular cushion, combined with our durable, resilient calendared layer and extremely tough reinforcing fiberglass mesh, provides superior fatigue reduction, better sports performance, and higher resistance to rolling and static loads compared to competitor systems.

BETTER GRIP CONTROL

Consistent surface friction

Omnisports' homogeneous top embossing and surface treatment provide the proper balance of friction and grip control. These features reduce friction burn risks and provide ideal surface finish behavior for recreational and competitive activities.

TARKETT SPORTS DIFFERENCE

No change in grip and feeling underfoot when moving from solid color to pattern

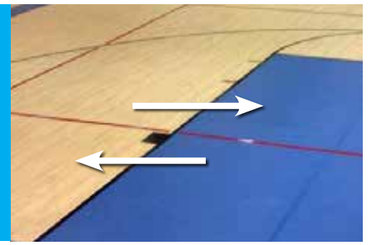

DESIGNED TO BE SAFE

BUILDING FOR TOMORROW

IT'S OUR SUSTAINABILITY COMMITMENT

Our promise to keep athletes safe on our surfaces has become our singular focus. In everything we do, we strive to completely eliminate its potential to harm not just people but the environment, too. Our commitment to creating safer surfaces means leading the industry in manufacturing indoor athletic flooring with the lowest impact on people and planet.

Tarkett is recognized as an industry leader in sustainability – Awarded: A-Level rating from CDP and Platinum Medal from EcoVadis

RECYCLABLE · PHTHALATE FREE · BIOCIDE FREE · MHS · ≤ 10 µg/m³ OPTIMAL INDOOR AIR QUALITY

CUTS OUT THE NOISE

TO FOCUS ON THE GAME

The Omnisports series is designed with a cushioned vinyl backing that reduces noise levels and provides optimal acoustic comfort.

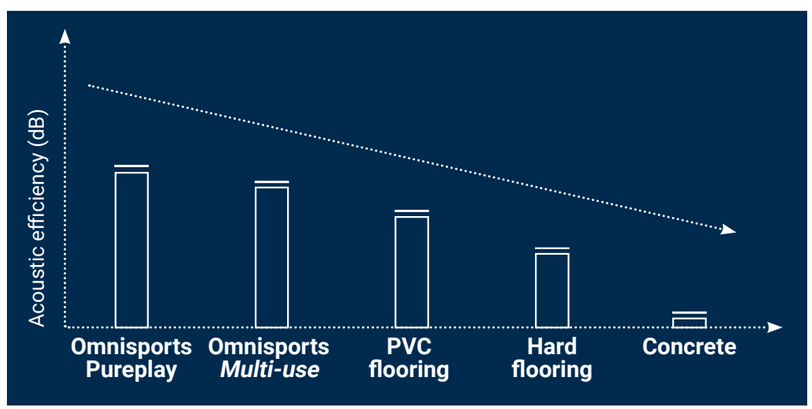

NOTHING IS MORE IMPORTANT

THAN YOUR ATHLETES' SAFETY

Indoor air quality is essential for athletes' health, especially children, who are more vulnerable to indoor pollution due to their immature lungs. The materials in the Omnisports range were carefully selected to deliver a surface that provides optimal indoor air quality.

PHTHALATE-FREE MANUFACTURING

As part of Tarkett's initiative for sustainability and eco-innovation, Omnisports is one of the only phthalate-free resilient sports floors available in North America.

- **Improves the indoor environment and air quality**
- **Same components used in food containers and children's toys**

ASTHMA- & ALLERGY-FRIENDLY

Omnisports was the first sports surface to be certified asthma- & allergy-friendly, providing a healthier sports flooring solution. When combined with Multi-Poxy Adhesive from Tarkett Sports, Omnisports Multi-Use, Active+, and PurePlay with popular GreenLay™ installation exceed all of the asthma- & allergy-friendly certification standards.

- **Low VOC emissions**
- **Low allergen retention**

LOW VOCS AND BETTER INDOOR AIR QUALITY

A healthy indoor environment begins with low levels of volatile organic compounds (VOCs).

- **VOC emissions less than 10 micrograms per cubic meter***
  A lower VOC emission rate than most other resilient sports floors
  **VOCs after 28 days (ISO 16000)*
- **Complies with California Section 01350, the most stringent air quality regulation in the U.S.**

TRUSTED AT ALL LEVELS

OVER 10,000 INSTALLATIONS IN NORTH AMERICA

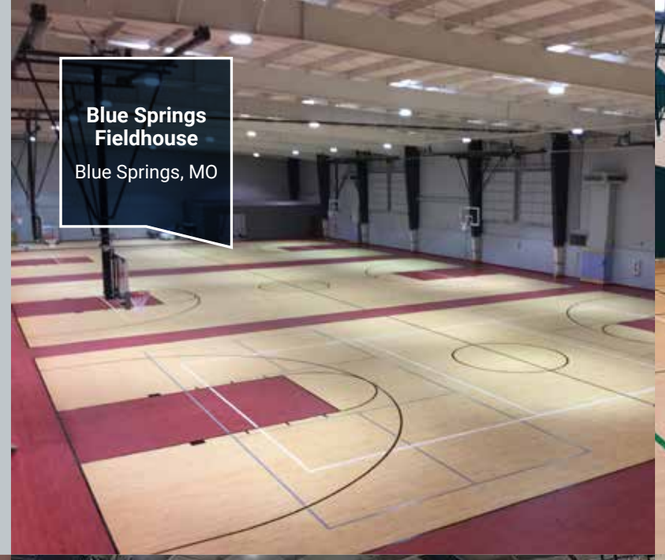
Blue Springs Fieldhouse
Blue Springs, MO

City of Valle Vista
Valle Vista, CA

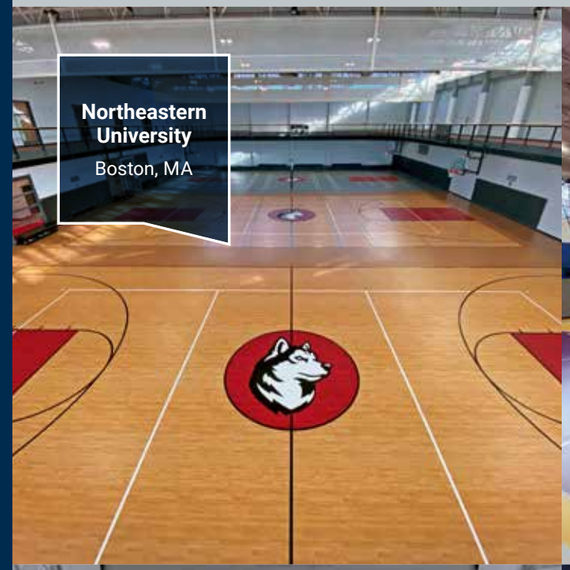
Northeastern University
Boston, MA

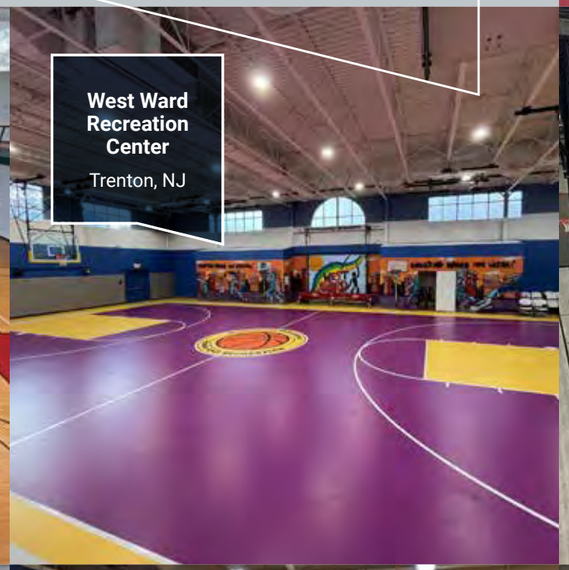
West Ward Recreation Center
Trenton, NJ

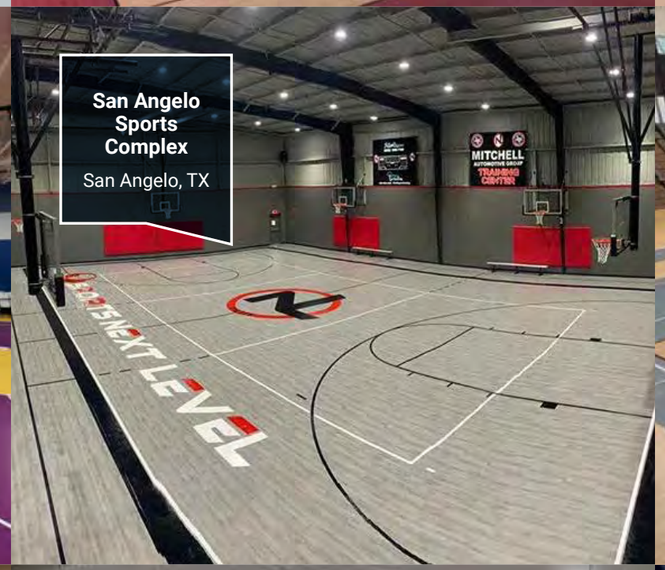

San Angelo Sports Complex
San Angelo, TX

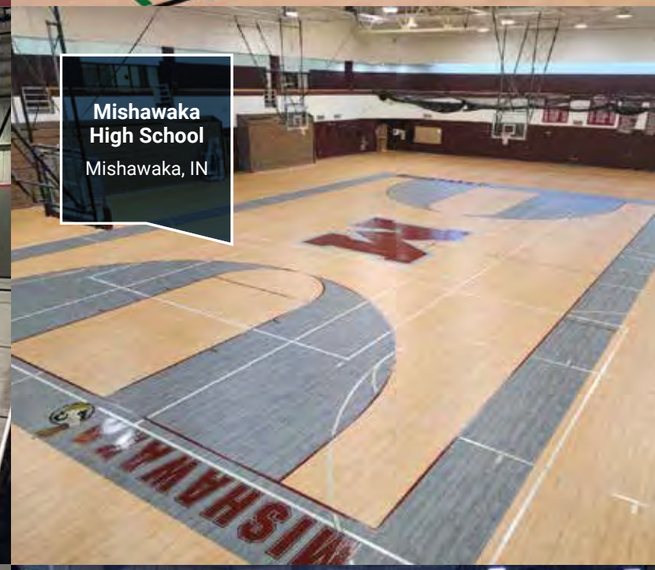

Mishawaka High School
Mishawaka, IN

Teueikan School
Mingan, QC

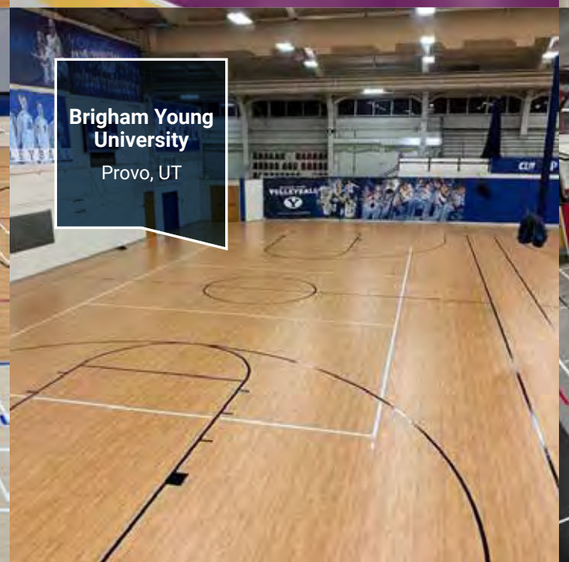
Brigham Young University
Provo, UT

SUNY Plattsburgh
Plattsburgh, NY

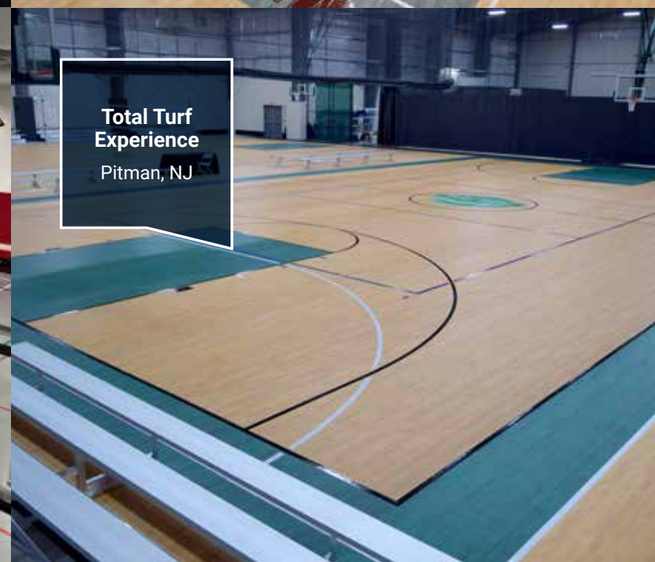
Total Turf Experience
Pitman, NJ

UNDERSTANDING SPORTS FLOORING

To help guide you to the right system for your facility, we rely on the independent flooring standard ASTM F2772. This way, you can better evaluate and compare similar systems. Let's focus on the facts and cut out the noise.

HOW DOES THE SPORTS FLOORING STANDARD WORK?
It focuses on four critical areas:

1 FORCE REDUCTION (SHOCK ABSORPTION)

Force reduction (also called "shock absorption") evaluates a surface's ability to reduce impact force. The standard has set a minimum value of 10% force reduction and categorizes the remaining range into five classes, of which Class 5 has the highest force reduction.

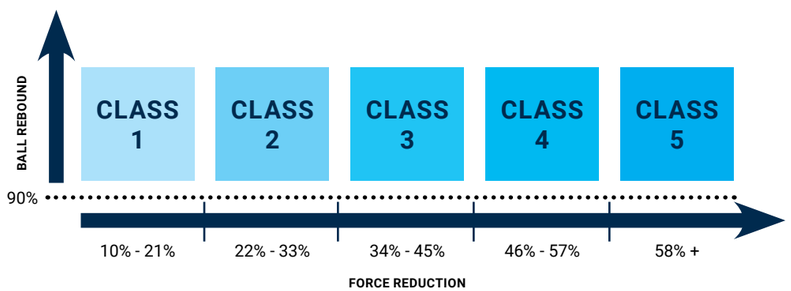

2 BALL REBOUND

Ball rebound (also called ball bounce) is a mechanical property that determines a surface's suitability for basketball. It is tested according to ASTM F2117 and accounts for two parameters: performance level (average performance of test points must reach a minimum of 90%) and uniformity level (test point deviation cannot exceed 3% of the average of all tests). Ball rebound is based on the responsiveness of a ball and its interaction with the surface. It is calculated by comparing the ball's rebound height on the sports surface to the rebound height of the same ball on concrete.

This area is concluded as a pass or fail, no classes.

3 VERTICAL DEFORMATION

Vertical deformation values indicate the ability of the surface to deform under load. High deformation can affect the safety of the athlete, causing instability of the foot, while low deformation may cause injuries as a result of immediate impact force.

4 SURFACE FINISH EFFECT (FRICTION)

Surface finish effect describes a surface's response to a sliding foot, typically under dry conditions. It is tested according to ASTM E303 and accounts for two parameters: performance level (testing must achieve a value between 80 and 110) and uniformity level (individual tests cannot vary more than 4 points from the average value)

OMNISPORTS RANGE

CLASS 1

SPEED

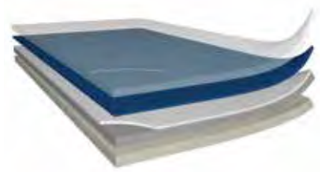

HPL 7

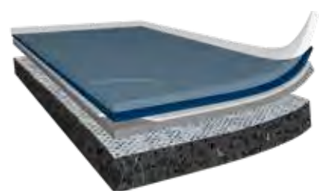

CLASS 2

MULTI-USE

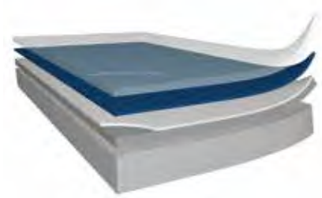

HPL 9

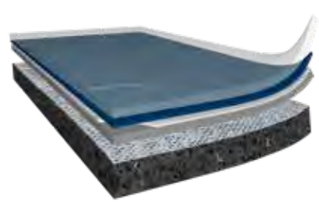

CLASS 3

ACTIVE+

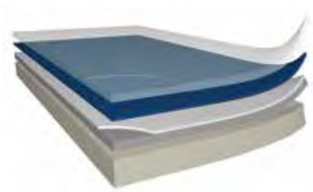

PUREPLAY

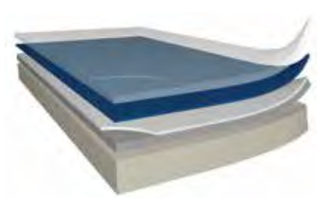

CLASS 4/5

LOOKING FOR A **CLASS 4** OR **CLASS 5** OPTION?
ASK US ABOUT OUR **LUMAFLEX** SYSTEMS

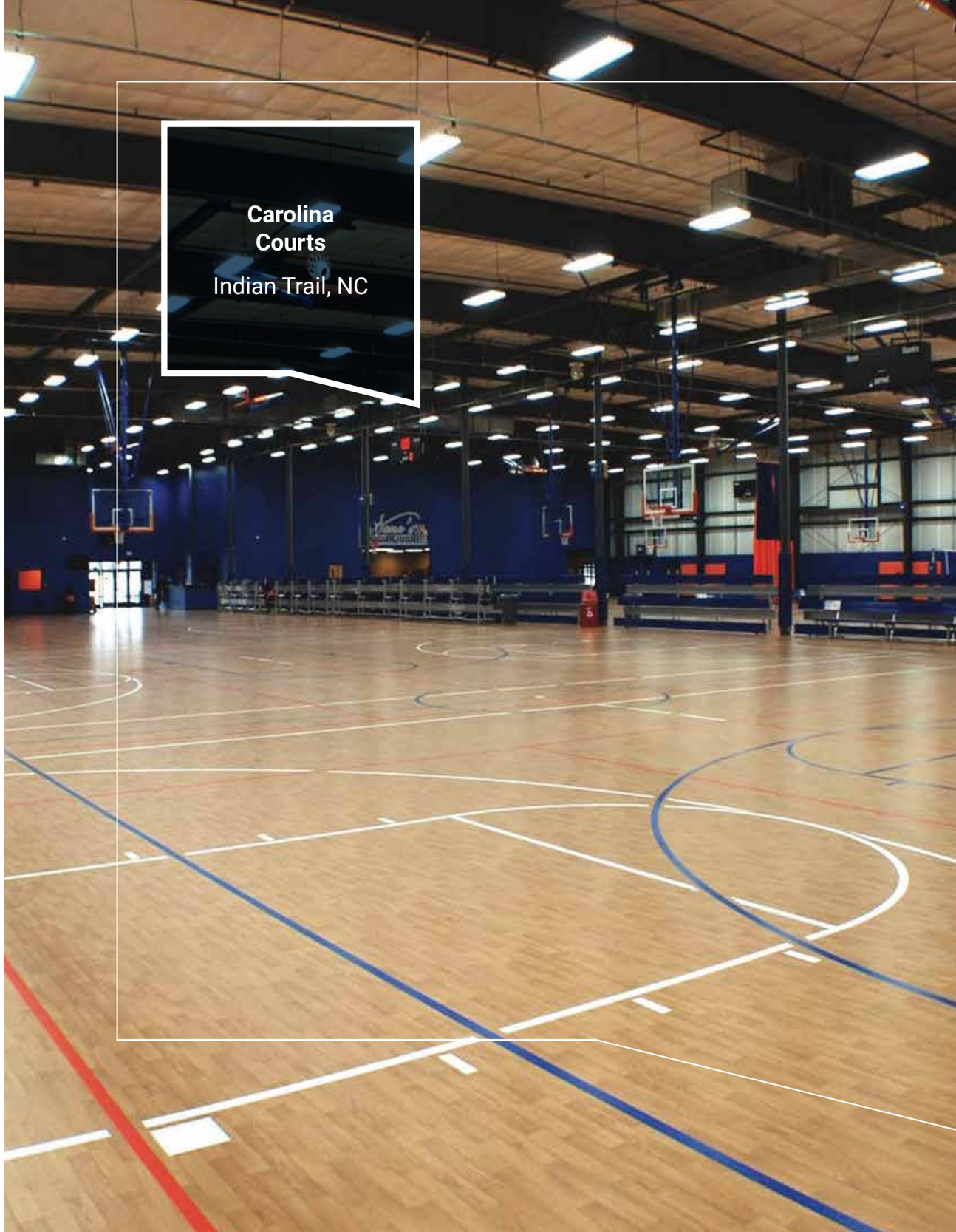

OMNISPORTS COLLECTION Class 1 Systems

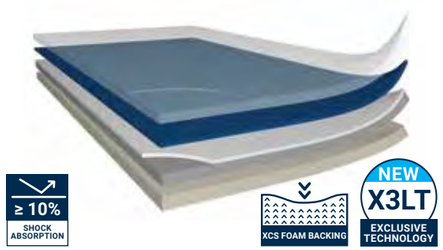

SPEED

Ideal for walking and acoustic comfort in fitness, leisure, and wellness areas

KEY FEATURES

- Ideal noise reduction
- Exceptional indentation recovery
- Significant resistance to rolling loads
- Easy maintenance

11 COLORS | 25 YEARS WARRANTY | PHTHALATE FREE

APPLICATIONS

Table tennis, badminton

FORMAT

Roll
6.56' Wide

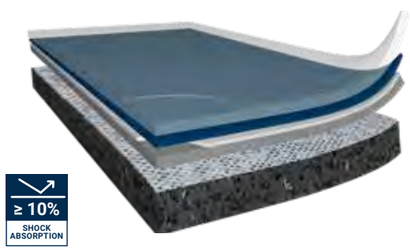

HPL 7

Ideal for heavy bleachers, equipment, and sports activities

KEY FEATURES

- Class 1 shock absorption
- Tolerates static and rolling loads as well as any vulcanized rubber surface, up to **500 psi**
- Easy maintenance
- Phthalate-free manufacturing

26 COLORS | 25 YEARS WARRANTY | PHTHALATE FREE

APPLICATIONS

Multi-use, cafetorium, pickleball, fitness-cardio, roller sports, yoga, and high foot traffic areas

FORMAT

Roll
6.56' Wide

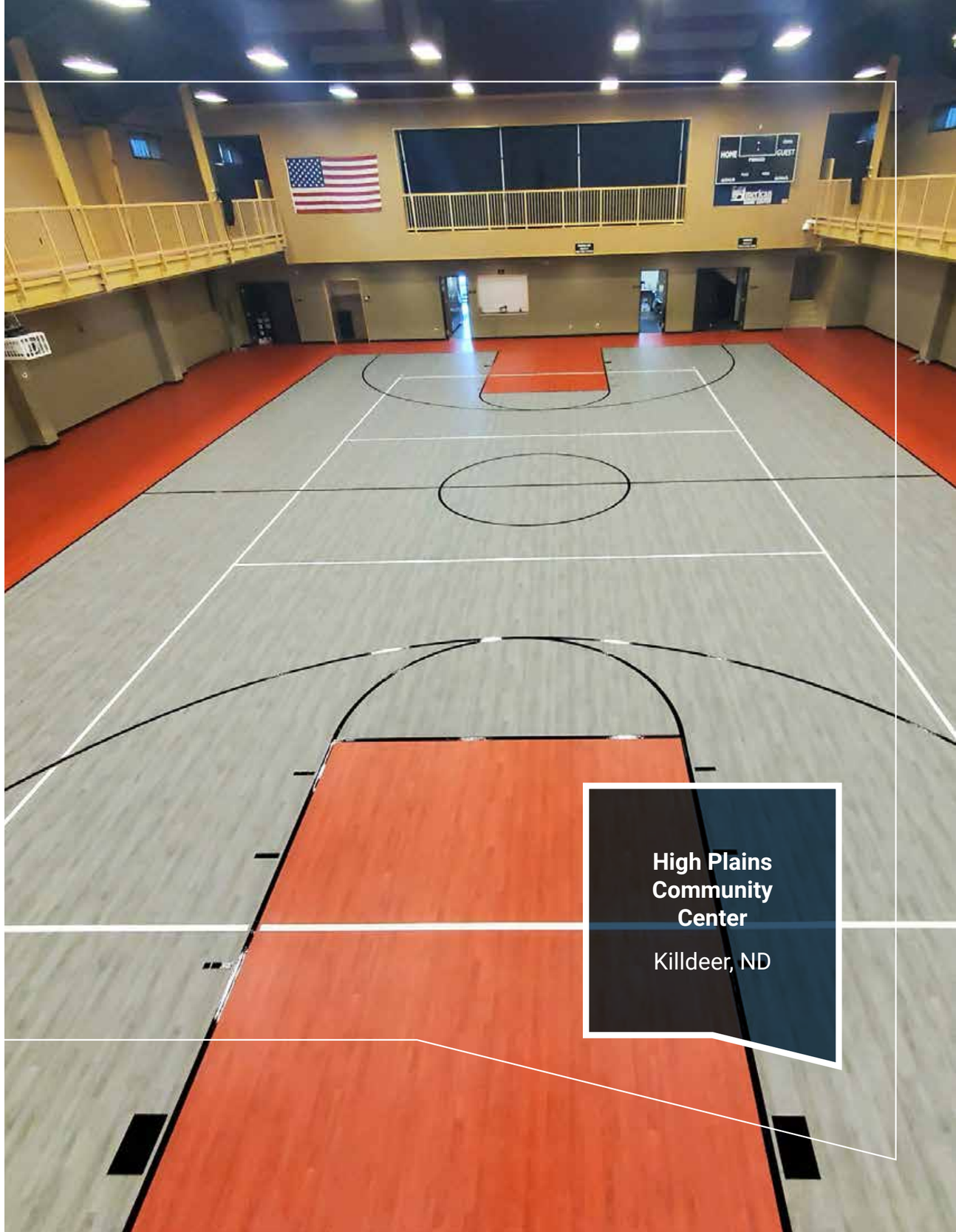

High Plains Community Center

Killdeer, ND

OMNISPORTS COLLECTION Class 2 Systems

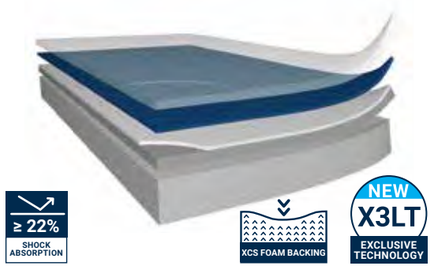

MULTI-USE

Ideal flooring for multi-sports practice and non-sporting events

KEY FEATURES

- Class 2 shock absorption
- Exceptional resistance to static loads (chairs, tables, bleachers,...): **≤0.10mm***
- Superior resistance to heavy rolling loads (trolleys...)
- Resistance to stains and scratches: **0.70mm PU-reinforced wear layer**
- Available with **GreenLay™** exclusive installation method: **98% adhesive-free****

26 COLORS · 25 YEARS WARRANTY · PHTHALATE FREE · Asthma & Allergy Friendly

APPLICATIONS

Multi-sports: basketball, volleyball, handball, badminton, futsal, table tennis, pickleball... and non-sporting events: exams, elections, balls, public meetings, association meetings...

FORMAT

Roll
6.56' Wide

*Chair with 176 lb. person during 5h.
**See page 35

HPL 9

Ideal for heavy bleachers, equipment, and sports activities

KEY FEATURES

- Class 2 shock absorption
- Tolerates static and rolling loads as well as any vulcanized rubber surface, up to **500 psi**
- Easy maintenance
- Phthalate-free manufacturing

26 COLORS · 25 YEARS WARRANTY · PHTHALATE FREE

APPLICATIONS

Multi-use, pickleball, fitness-cardio, wellness centers, roller sports, yoga, traffic areas

FORMAT

Roll
6.56' Wide

Shady Spring Elementary School

Shady Spring, WV

OMNISPORTS COLLECTION Class 3 Systems

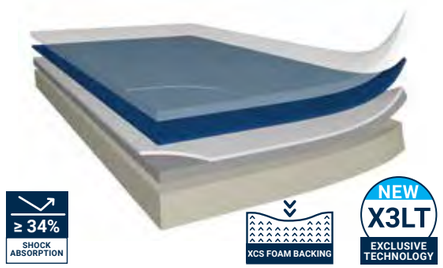

ACTIVE +

Ideal balance of performance
& comfort for multi-sports

KEY FEATURES

- Class 3 shock absorption
- High noise reduction
- Excellent underfoot comfort for enhanced game experience and protection for athletes
- Easy maintenance

26 COLORS

APPLICATIONS

Multi-sports: basketball, volleyball, handball, badminton, futsal, pickleball… and non-sporting events: exams, elections, balls, public meetings, association meetings...

FORMAT

Roll
6.56' Wide

* See page 35

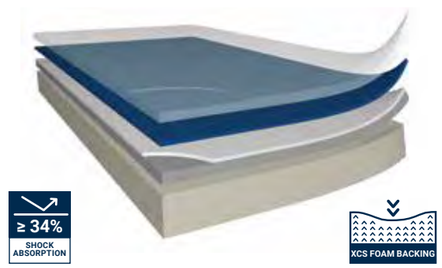

PUREPLAY

Extreme protection,
comfort and sports performance

KEY FEATURES

- Class 3 shock absorption: optimized cushion-vinyl construction, our thickest foam for excellent performance
- Excellent underfoot comfort for enhanced game experience and protection for athletes
- Resistance to stains and scratches: **0.80mm PU reinforced wear layer**
- Available with **GreenLay™** exclusive installation method: **98% adhesive-free***
- Easy maintenance

5 COLORS

APPLICATIONS

Multi-sports: basketball, volleyball, handball, futsal, table tennis, pickleball, yoga…

FORMAT

Roll
6.56' Wide

Perkins Elementary School

Perkins, OK

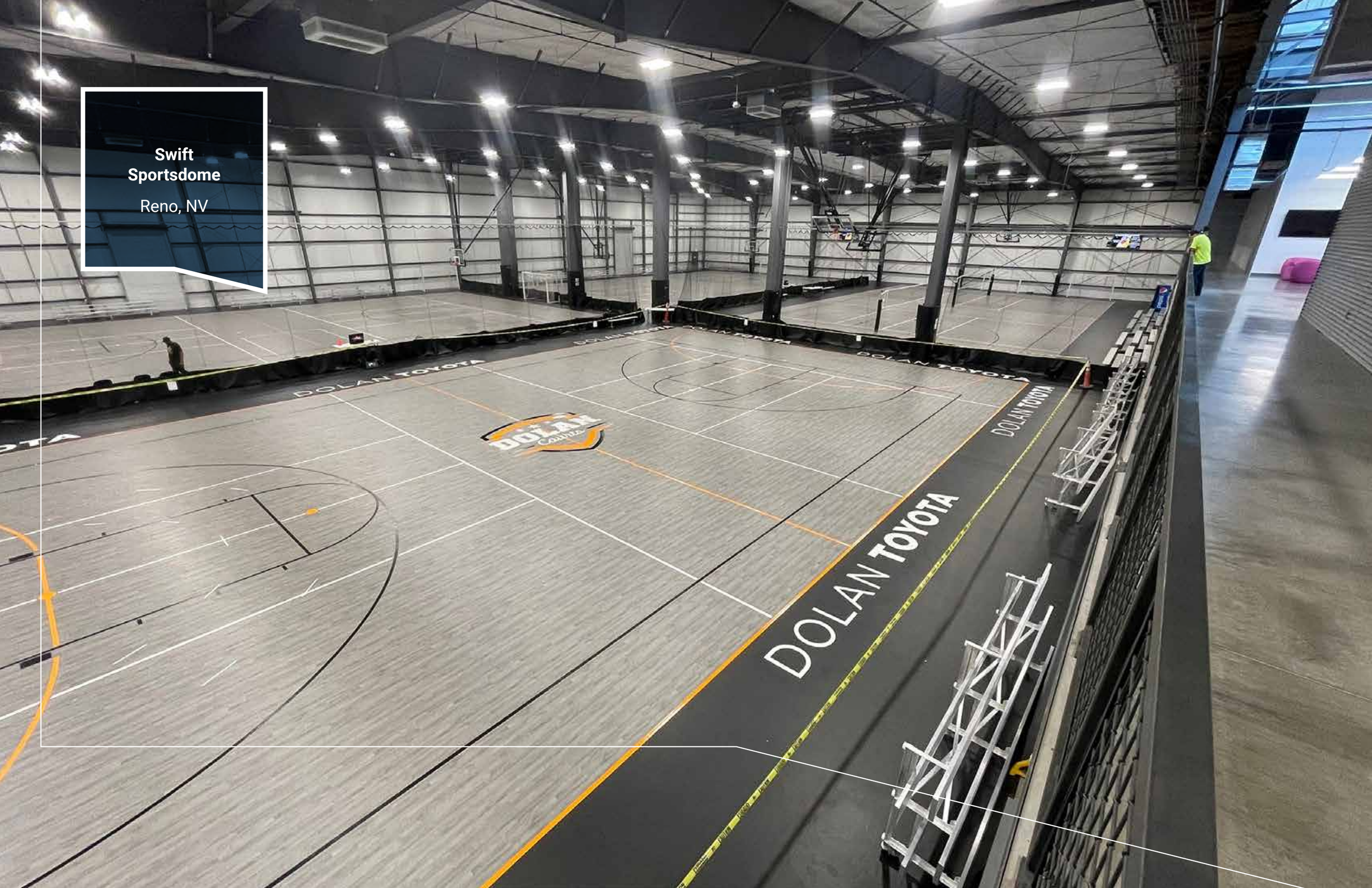

Swift Sportsdome

Reno, NV

UNLIMITED DESIGN POSSIBILITIES

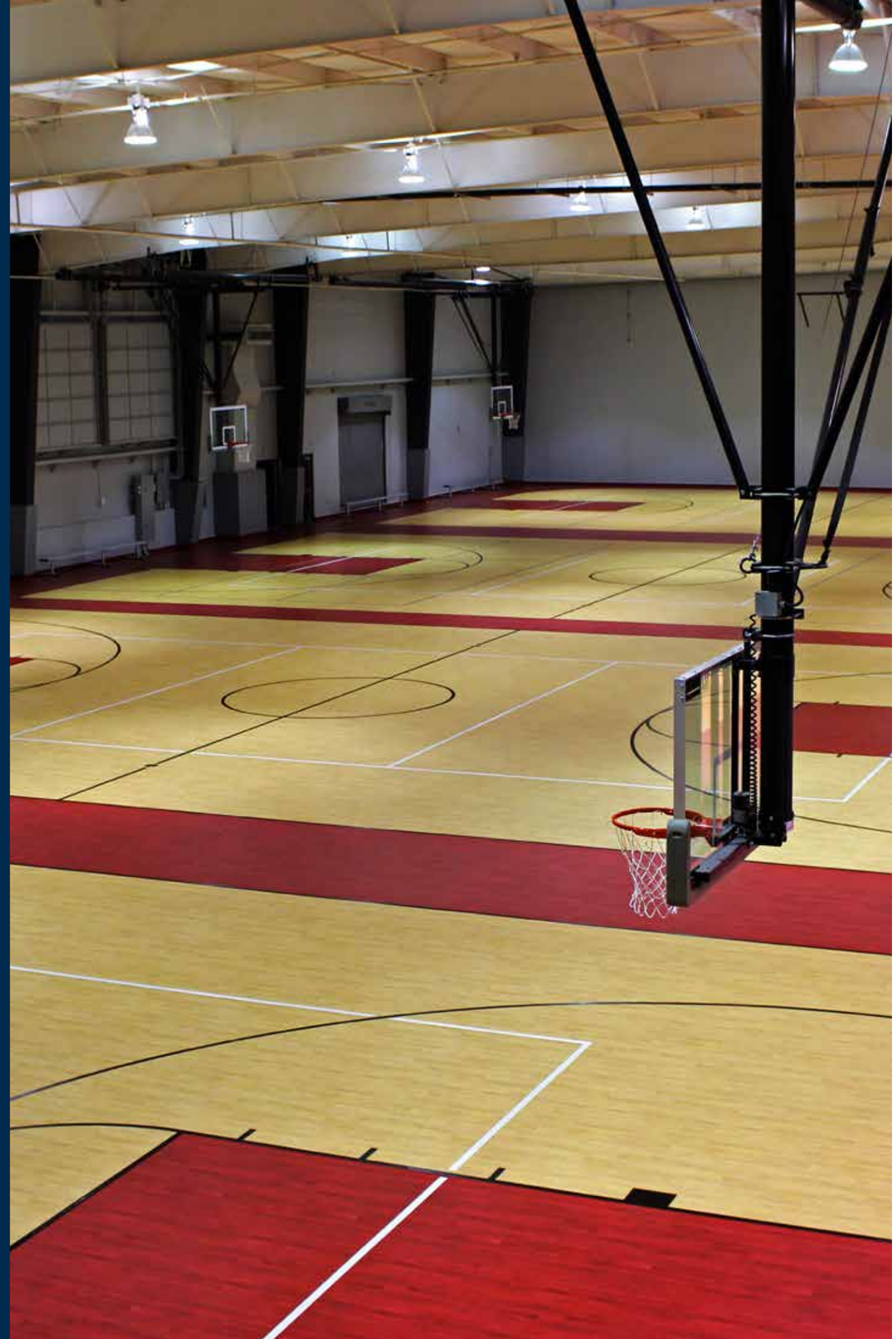

AVAILABLE COLORS

OMNISPORTS SPEED

- TONIC BLUE *
- SKY BLUE
- TEAL
- TONIC YELLOW *
- TONIC ORANGE *
- TONIC RED *
- BLACK
- GREY
- CONCRETE COOL GREY *
- NORDIC OAK *
- GOLDEN MAPLE

OMNISPORTS MULTI-USE / ACTIVE+ / HPL 7 / HPL 9

- NORDIC OAK *
- CONCRETE GREY BEIGE *
- KHAKI *
- SILVER GREY *
- CONCRETE COOL GREY *
- GREY MAPLE
- GREY
- BLACK MAPLE *
- BLACK
- NATURAL OAK *
- LIGHT MAPLE
- BEECH*
- GOLDEN MAPLE
- CLASSIC OAK*
- CONCRETE DEEP BLUE *
- BLUE MAPLE
- TONIC BLUE *
- NIGHT BLUE
- SKY BLUE MAPLE *
- SKY BLUE
- GREEN MAPLE
- TONIC GREEN *
- TONIC YELLOW *
- TONIC ORANGE *
- TONIC RED *
- RED MAPLE

OMNISPORTS PUREPLAY

- SKY BLUE
- GREY
- GREY MAPLE
- LIGHT MAPLE
- GOLDEN MAPLE

**This pattern has a 3" wide plank. Maple patterns have a width of 2 1/4". ✱ = NEW*
The images shown herein are intended for illustrative purposes only and are not exact representations of the actual products. Size, colors, and materials may vary.

INSTALLATION METHODS

OMNISPORTS IS A VERSATILE SPORTS SURFACE THAT GOES BEYOND THE NUMBER OF SPORTS AND EVENTS IT CAN HOST

UNIQUE 2M ROLL WIDTH

30% less welding required, decreasing the areas at risk of soiling.

Omnisports needs to be installed according to the conditions on-site to ensure maximum performance and durability. A variety of installation methods are available to accommodate each facility's particular circumstances.

SUBFLOOR INSTALLATION

INSTALLATION TYPE	MULTI-SET	HS SPORT SPRAY	GREENLAY	MULTI-POXY	TARKOLAY WITH MULTI-POXY
Concrete Substrate Maximum Tolerances	**95% RH 4% MC**	**90% RH 4.5% MC**	**92% RH 5% MC**	**98% RH 6% MC**	**Moisture Testing Not Required***
Omnisports Speed	✔	✔	✘	✔	✔
Omnisports Multi-Use	✔	✔	✔	✔	✔
Omnisports Active+	✔	✔	✔	✔	✔
Omnisports Pureplay	✔	✔	✔	✔	✔
Omnisports Extreme	✔	✔	✘	✔	✔
Omnisports Compact & HPL	✘	✘	✘	✔	✔

* For all systems, please review current installation recommendations for additional information regarding substrates, conditions, and methods. Some substrates may require additional or alternative treatments prior to the application of floor covering. Compatible substrates include: properly constructed and prepared concrete, wood, asphalt, and cementitious underlayments. Refer to current installation guidelines, ASTM F710, ACI 302.2R, and other industry publications, including accessories, for more information. Hot Yoga and Radiant Heated Slabs should use either Multi-Poxy or Tarkolay systems as conditions require. "RH is measured per ASTM F2170. "MC" is measured per ASTM F2659 for Surface and Impedance Probe.

TARKOLAY

Every flooring installation is different. In some cases, high moisture, cracks, joints, or other factors present challenges that require an underlayment. Tarkolay is a FloorScore-certified underlayment that isolates the flooring system away from the substrate, removing the potential for vapor pressure to form. Tarkolay also assists with installations over moving joints, minor cracks in concrete substrates, and existing surfaces that are adverse to standard installation methods. Only Multi-Poxy adhesive may be used with Tarkolay.

1. ISOLATION OF THE SPORTS SURFACE

Tarkolay mitigates adverse conditions by separating the sports surface from the subfloor. Through isolation, an imperfect subfloor is less likely to affect the integrity of the surface installation.

2. DIMENSIONALLY STABLE UNDERLAYMENT

Tarkolay is a dimensionally stable underlayment with a smooth top surface for excellent adhesion to the sports floor.

3. RAISED TEXTURE FOR DISPERSING WATER VAPOR

The embossed texture on the underside of Tarkolay creates a micro-venting condition, disallowing vapor pressure to form, which eliminates some concerns with conventional fully adhered systems in similar conditions.

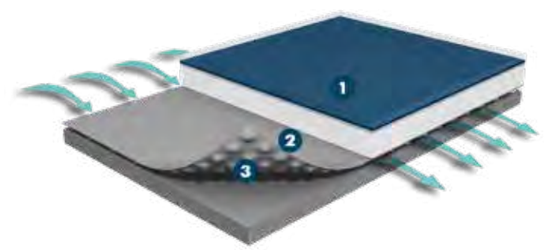

floor score

NO MOISTURE TESTING REQUIRED

GREENLAY™

GreenLay™ has revolutionized sports flooring installations as the new standard of performance and environmental responsibility. In an 8,000-square-foot gymnasium, less than one gallon of adhesive is used compared to nearly 64 gallons for a full-spread installation.

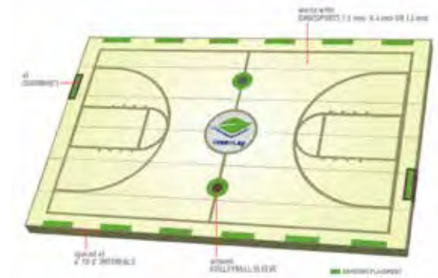

HOW IT WORKS

GreenLay™ uses small amounts of adhesive along the parallel walls of the court, in doorways, and around volleyball sleeves, while Tarkotape from Tarkett secures each seam for welding. The Omnisports material does the rest with its excellent dimensional stability and virtually tension-free manufacturing process, making it the only resilient sports flooring that can be installed this way. In short, the superior quality of Omnisports makes GreenLay™ possible.

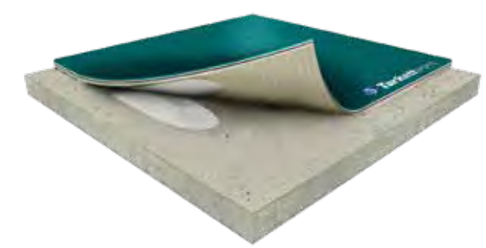

UP TO 25 YEARS MOISTURE RESISTANCE WARRANTY UP TO 92% RH

floor score

Asthma & Allergy Friendly

TARKETT SPORTS MULTI-POXY

Tarkett Sports' Multi-Poxy is a specially designed 2-component adhesive for the installation of indoor resilient sports flooring over a variety of properly prepared substrates. When parts A and B are thoroughly mixed and used as recommended, it forms a reactive adhesive that cures to a tough semi-flexible film with excellent surface moisture resistance and strong adhesive bond. Multi-Poxy is a fast-setting adhesive with traffic available in as little as 8 hours depending upon conditions. Multi-Poxy is the exclusive adhesive used with Tarkolay, an advanced elevated moisture accommodating system. Multi-Poxy is packaged in a single 2-gallon kit with both parts included and separating liner for clean and easy mixing. Multi-Poxy meets CDPH environmental compliance at < 50 g/l.

SOLUTION GUIDE A dedicated solution for each area

- ● Highly recommended
- ○ Highly recommended with Lumaflex sub-construction
- ● Suitable

	OMNISPORTS					
	COMPACT	SPEED	HPL	MULTI-USE	ACTIVE+	PUREPLAY
		p. 22	p. 22, 24	p. 24	p. 26	p. 26
Multi-sports	○	●	●	●	●	●
Multi-use	○	●	●	●	●	●
Basketball	○	●	●	●	●	●
Volleyball	○	●	●	●	●	●
Handball	○	●	●	●	●	●
Futsal	○	●	●	●	●	●
Table tennis		●	●	●	●	●
Badminton		●	●	●	●	●
Pickleball	○	●	●	●	●	●
Fitness - aerobics	○		●	●	●	●
Fitness - cardio (bikes, treadmills, rowing machines,...)		●	●			
Wellness centers		●	●			
Roller sports and handisports	○		●			
Yoga			●		●	●
High-traffic areas (corridors, entrance halls, meeting rooms,...)	●		●			

TECHNICAL DATA

CERTIFICATION & CLASSIFICATION	STANDARD	COMPACT	SPEED	HPL 7	HPL 9	MULTI-USE	ACTIVE+	PUREPLAY
Ball Rebound	ASTM F2772-11	See HPL Data	Passed	Passed	Passed	Passed	Passed	Passed
Force Reduction	ASTM F2772-11	See HPL Data	Class 1	Class 1	Class 2	Class 2	Class 3	Class 3
Surface Finish Effect	ASTM F2772-11	See HPL Data	Passed	Passed	Passed	Passed	Passed	Passed
Vertical Deformation	ASTM F2772-11	See HPL Data	Passed	Passed	Passed	Passed	Passed	Passed
Below-Room Sound Insulation	ISO 717/02	N/A	20 dB	N/A	N/A	21 dB	21 dB	21 dB
Microbial Resistance	ASTM G21	No Growth	No Growth	No Growth	No Growth	No Growth	No Growth	No Growth
Reaction to Fire	ASTM E648	Class 1 (Radiant Panel)	Class 1 (Radiant Panel)	Class 1 (Radiant Panel)	Class 1 (Radiant Panel)	Class 1 (Radiant Panel)	Class 1 (Radiant Panel)	Class 1 (Radiant Panel)
Resistance to Impact	EN 1517	No Degradation	No Degradation	No Degradation	No Degradation	No Degradation	No Degradation	No Degradation
Rolling Load	EN 1569	See HPL Data	≤ 1.0 mm (No Degradation)	≤ 0.5 mm (No Degradation)	≤ 0.5 mm (No Degradation)	≤ 0.5 mm (No Degradation)	≤ 0.5 mm (No Degradation)	≤ 0.5 mm (No Degradation)
Roll Width	EN 426/EN 427	2 m (6.56')	2 m (6.56')	2 m (6.56')	2 m (6.56')	2 m (6.56')	2 m (6.56')	2 m (6.56')
Chemical Resistance	ASTM F925	Excellent	Excellent	Excellent	Excellent	Excellent	Excellent	Excellent
Static Load Tolerance	ASTM F970	See HPL Data	175 psi	500 psi	500 psi	175 psi	175 psi	175 psi
Thickness	EN 428/EN 429	2.0 mm (0.079)	3.5 mm (0.138")	7 mm (0.276")	9 mm (0.354")	6.2 mm (0.244")	8.1 mm (0.319")	9.4 mm (0.37")
Wear Layer Performance Grade	ASTM F1303	Type 1, Grade 1, Commercial	Type 1, Grade 1, Commercial	Type 1, Grade 1, Commercial	Type 1, Grade 1, Commercial	Type 1, Grade 1, Commercial	Type 1, Grade 1, Commercial	Type 1, Grade 1, Commercial
Wear Layer Structure		2.0 mm (0.079)	2.0 mm	2.0 mm	2.0 mm	2.0 mm	2.0 mm	2.0 mm
Wear Layer Thickness	ASTM F410/F1303	0.7 mm	0.65 mm	0.7 mm	0.7 mm	0.7 mm	0.7 mm	0.7 mm
Weight	EN 430	3.1 kg/m² (0.64 lbs./sq.ft)	3.29 kg/m² (0.67 lbs./sq.ft.)	3.66 kg/m² (0.75 lbs./sq.ft.)	5.13 kg/m² (1.05 lbs./sq.ft.)	3.95 kg/m² (.81 lbs./sq.ft.)	4.76 kg/m² (0.96 lbs./sq. ft.)	5.2 kg/m² (1.07 lbs./sq.ft.)

The above information is subject to modification for the benefit of further improvement. (03/2025).
Tarkett Sports' instructions regarding installation, cleaning and maintenance should be observed. Please contact Tarkett for these instructions.

mindful MATERIALS

Tarkett SPORTS

FieldTurf® By Tarkett Sports | BEYNON® By Tarkett Sports | ClassicCourt By Tarkett Sports | Tarkett SPORTS INDOOR | GRASSMASTER By Tarkett Sports

Tarkett SPORTS CONSTRUCTION | Tarkett SPORTS DESIGN | AMPERE | ANCHOR MANAGEMENT GROUP

renner® A Tarkett Sports Company | CLASSIC TURF A Tarkett Sports Company | zaino® A Tarkett Sports Company

© Copyright 2025. FieldTurf USA, Inc. All Rights Reserved.

SCAN ME

888-364-6541

tarkettsportsindoor.com

Tarkett SPORTS INDOOR

Play to win

POLYTURF PLUS PAD & POUR

Tarkett SPORTS INDOOR

INDEX

WHY TARKETT SPORTS IS THE RIGHT CHOICE 4

STANDARDS & CLASSES 6

OVERVIEW 8

FEATURES 9

WHY POLYTURF PLUS PAD & POUR? 10

THE COLLECTION 12

TECHNICAL DATA 18

MANUFACTURING 20

COLORS THAT ELEVATE 22

TRUSTED AT ALL LEVELS 24

A COMPLETE PACKAGE PLAYER 26

POLYTURF PLUS PAD & POUR

Everything we do, and the way we do it, is aimed to make the process easier for you. We focus on ensuring your experience is memorable and hassle-free.

We’ve known for a long time that a successful sports surface relies on a quality product installed by a quality team. We’ve built our PolyTurf Pad & Pour series by combining the best systems with the best people and partners. You can trust the renowned quality of PolyTurf Pad & Pour and the extensive experience of our team.

The pad & pour material is proudly American-made and supplied exclusively by our world-class producer, Beynon Sports.

We’re ready to partner on your next project. Let’s get started!

WHY Tarkett SPORTS IS THE RIGHT CHOICE

TARKETT SPORTS IS A WORLD LEADER IN ATHLETIC SURFACING, OFFERING A COMPREHENSIVE PORTFOLIO OF INDOOR AND OUTDOOR SPORTS SURFACES. OUR MISSION: TO OFFER SUSTAINABLE SPORTS SURFACES THAT MAKE THE DIFFERENCE FOR ATHLETES.

TARKETT SPORTS BRAND

Tarkett Sports is a world leader in athletic surfacing, offering a comprehensive portfolio of sports flooring solutions through its brands: FieldTurf, Beynon Sports, Renner Sports, EasyTurf, GrassMaster, PlayMaster, and Tarkett Sports Indoor.

EXPERIENCE

With over 10,000 installations in North America in the last 10 years, Tarkett Sports Indoor has the knowledge and expertise to make your sports facility a success.

DESIGN & CONSTRUCTION EXPERTS

Tarkett Sports and our partners are some of the most experienced and knowledgeable teams in the industry. When it comes to the design and construction of your sports surface, we are the experts.

TRUSTED

Tarkett Sports Indoor offers some of the most trusted sports flooring solutions for a variety of applications and programs.

FINANCIALLY STABLE

The Tarkett Group is a worldwide leader in innovative flooring and sports surface solutions. Tarkett Sports Indoor is backed by unprecedented financial support and stability.

ENDLESS PURSUIT OF INNOVATION

From the Dropzone rubber, PolyTurf Plus Pad & Pour system, Omnisports vinyl sports flooring, ClutchCourt wood, and LinoSport linoleum, our innovation and versatility extend beyond just sports. We're there to support your team.

LEADING DURABILITY

Manufactured and installed with the highest attention to detail, Tarkett Sports Indoor's systems showcase proven durability.

SERVICE

We are as committed to your program as you are, and we're with you for the long term. When you buy from Tarkett Sports, you're buying from a company that knows how to take care of you.

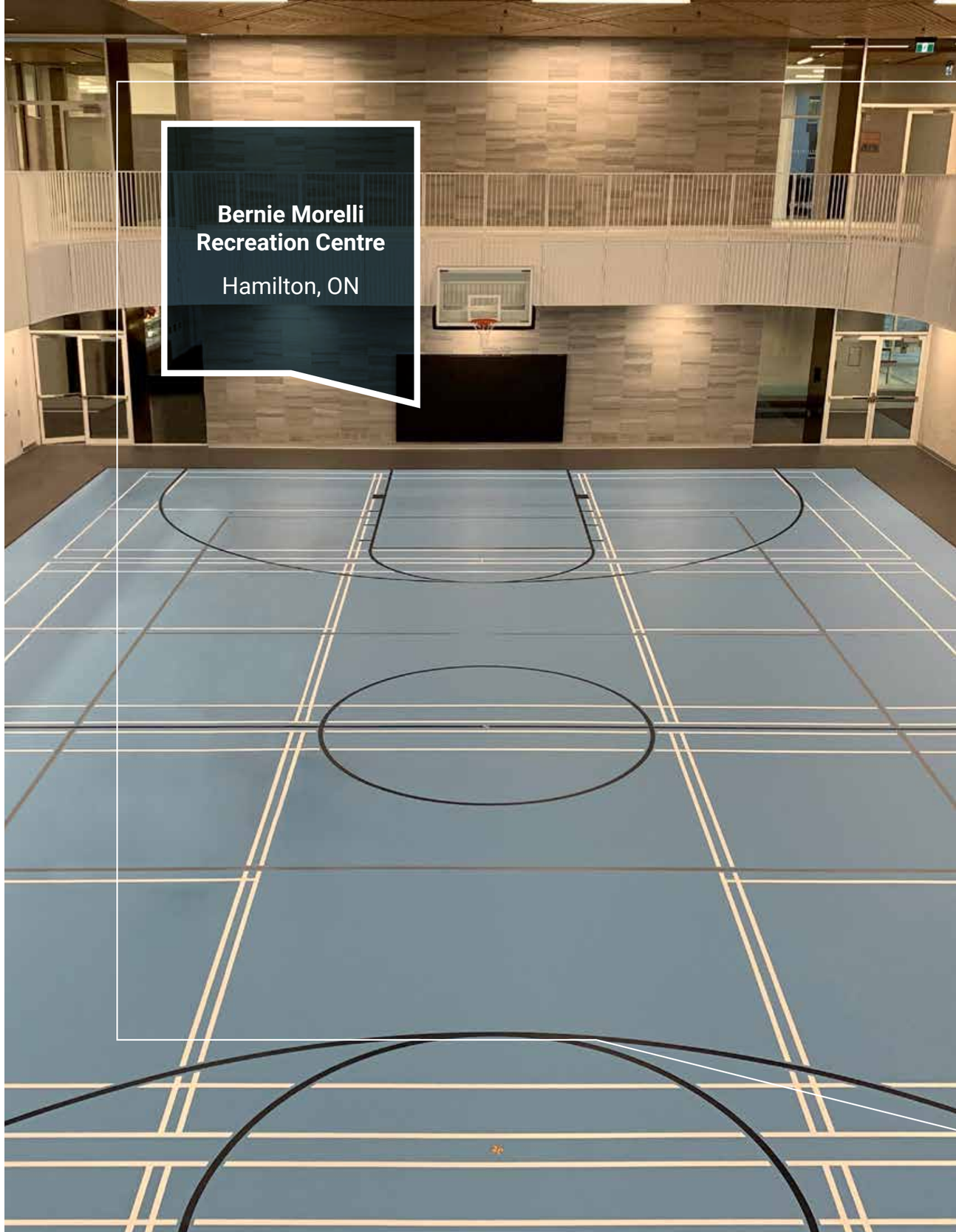

UNDERSTANDING SPORTS FLOORING

To help guide you to the right system for your facility, we rely on the independent flooring standard, ASTM F2772. This way, you can better evaluate and compare similar systems. Let's focus on the facts and cut out the noise.

HOW DOES THE SPORTS FLOORING STANDARD WORK?
It focuses on four critical areas:

1 FORCE REDUCTION (SHOCK ABSORPTION)

Force reduction (also called "shock absorption") evaluates a surface's ability to reduce impact force. The standard has set a minimum value of 10% force reduction and categorizes the remaining range into five Classes, of which Class 5 has the highest force reduction.

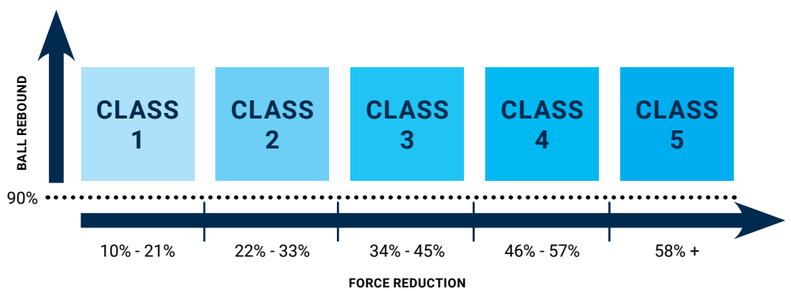

2 BALL REBOUND

Ball rebound (also called ball bounce) is a mechanical property that determines a surface's suitability for basketball. It is tested according to ASTM F2117 and accounts for two parameters: performance level (average performance of test points must reach a minimum of 90%) and uniformity level (test point deviation cannot exceed 3% of the average of all tests). Ball rebound is based on the responsiveness of a ball and its interaction with the surface. It is calculated by comparing the ball's rebound height on the sports surface to the rebound height of the same ball on concrete.

This area is concluded as a pass or fail, with no classes.

3 VERTICAL DEFORMATION

Vertical deformation values indicate the ability of the surface to deform under load. High deformation can affect the safety of the athlete, causing foot instability, while low deformation may cause injuries due to immediate impact force.

4 SURFACE FINISH EFFECT (FRICTION)

Surface finish effect describes a surface's response to a sliding foot, typically under dry conditions. It is tested according to ASTM E303 and accounts for two parameters: performance level (testing must achieve a value between 80-110) and uniformity level (individual tests cannot vary more than 4 points from the average value).

SO, WHAT IS PAD & POUR?

PolyTurf Plus Pad & Pour is a seamless sports floor designed to withstand various telescopic bleachers, tables, and chairs with maximum durability. It also provides a high-quality playing surface with shock absorption, precise game line markings, and stain resistance.

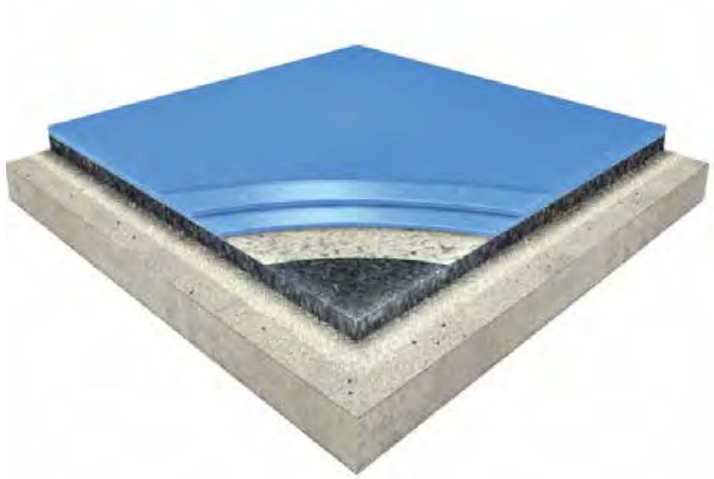

POINT-ELASTIC SYSTEM

Point Elastic Foam-Backed Surfaces have uniform performance across the whole playing surface. This means that every location on the floor will have almost identical shock absorption, ball rebound, and vertical deformation. In essence, a point-elastic floor interacts with each athlete on an individual basis.

USDA-CERTIFIED BIOBASED CONTENT

Tarkett Sports is proud to offer environmentally sustainable materials. Numerous polyurethane components utilized in our PolyTurf Plus Pad & Pour system are USDA Biopreffered certified.

GREENGUARD GOLD CERTIFICATION

PolyTurf Plus Pad & Pour is among the few sports floors to achieve this higher standard for indoor air quality. It is recognized by the Collaborative for High-Performance Schools (CHPS) Best Practice Manual for K-12 Schools and the LEED building rating system.

CUSHION, SEAL, PROTECT

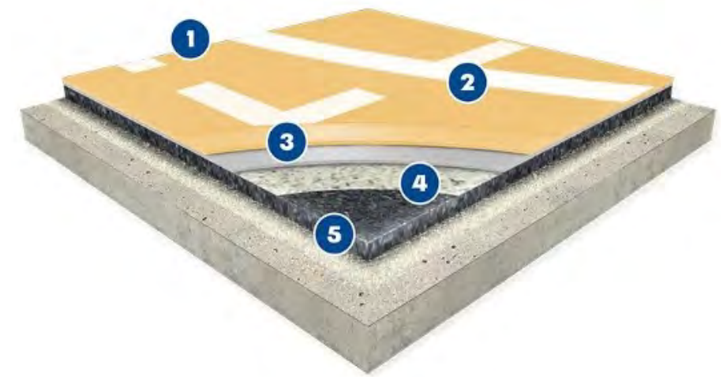

1 WATER-BASED ALIPHATIC COATING:

This spray or roller-applied coating provides optimal game performance and stain resistance.

2 CHEMICALLY BONDED GAME LINES:

Meticulously applied polyurethane marking paint creates precise and permanent game lines.

3 FORMULATED ELASTOMERIC RESIN:

This resin layer provides exceptional ball rebound and extra durability to the system.

4 TWO-COMPONENT SEAL LAYER:

The primary characteristic of PolyTurf Plus Pad & Pour is its seamless playing surface. This coating layer seals shock pad pores for a smooth and seamless gym floor.

5 RECYCLED RUBBER SHOCK PAD:

Made of 100% recycled rubber, this shock pad base layer provides cushioning and shock absorption. It's available in 4 mm, 7 mm, and 9 mm thicknesses.

A SPORTS FLOOR FOR MANY APPLICATIONS

MULTI-SPORT GYMNASIUMS

Basketball, volleyball, handball, badminton, futsal, table tennis, and pickleball.

NON-SPORT APPLICATIONS

Useful for churches, military training facilities, recreational facilities, elections, and fieldhouses.

WHY POLYTURF PLUS PAD & POUR?

BENEFITS THAT JUST MAKE SENSE

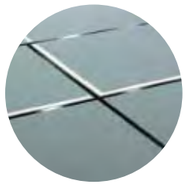

SEAMLESS SURFACE

PolyTurf Plus Pad & Pour provides a seamless gym flooring solution that combines visual elegance with the added advantage of easy cleaning due to its seam-free design.

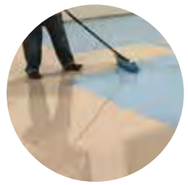

FAST INSTALLATION TIME

PolyTurf Plus Pad & Pour boasts an impressively rapid curing rate, allowing for a swift installation process and quick usability, saving valuable time.

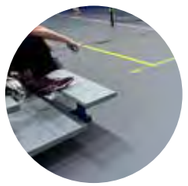

SUPERIOR LOAD TOLERANCES

PolyTurf Plus Pad & Pour Systems offer excellent resistance to indentation marks and rolling loads. The surface can safely be used for events and recreational activities that require temporary equipment and furniture to be placed on the surface.

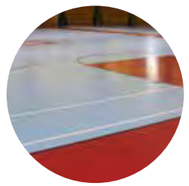

LASTING PERFORMANCE

Polyturf Plus Pad and Pour systems have proven longevity. The ability to renew the surface not only extends its lifespan but also allows customers to change or refresh the appearance as desired.

MORE COLOR OPTIONS

Tarkett Sports offers more color options for PolyTurf Plus Pad & Pour than any other pad and pour system on the market, allowing more customization for your gym floor.

WARRANTY PROTECTION*

The quality and performance of PolyTurf Plus Pad & Pour is protected by Tarkett Sports with a comprehensive 30-year warranty. General Warranty terms apply.

**Contact your Tarkett Sports Representative for more information regarding warranties, installation systems, and applications.*

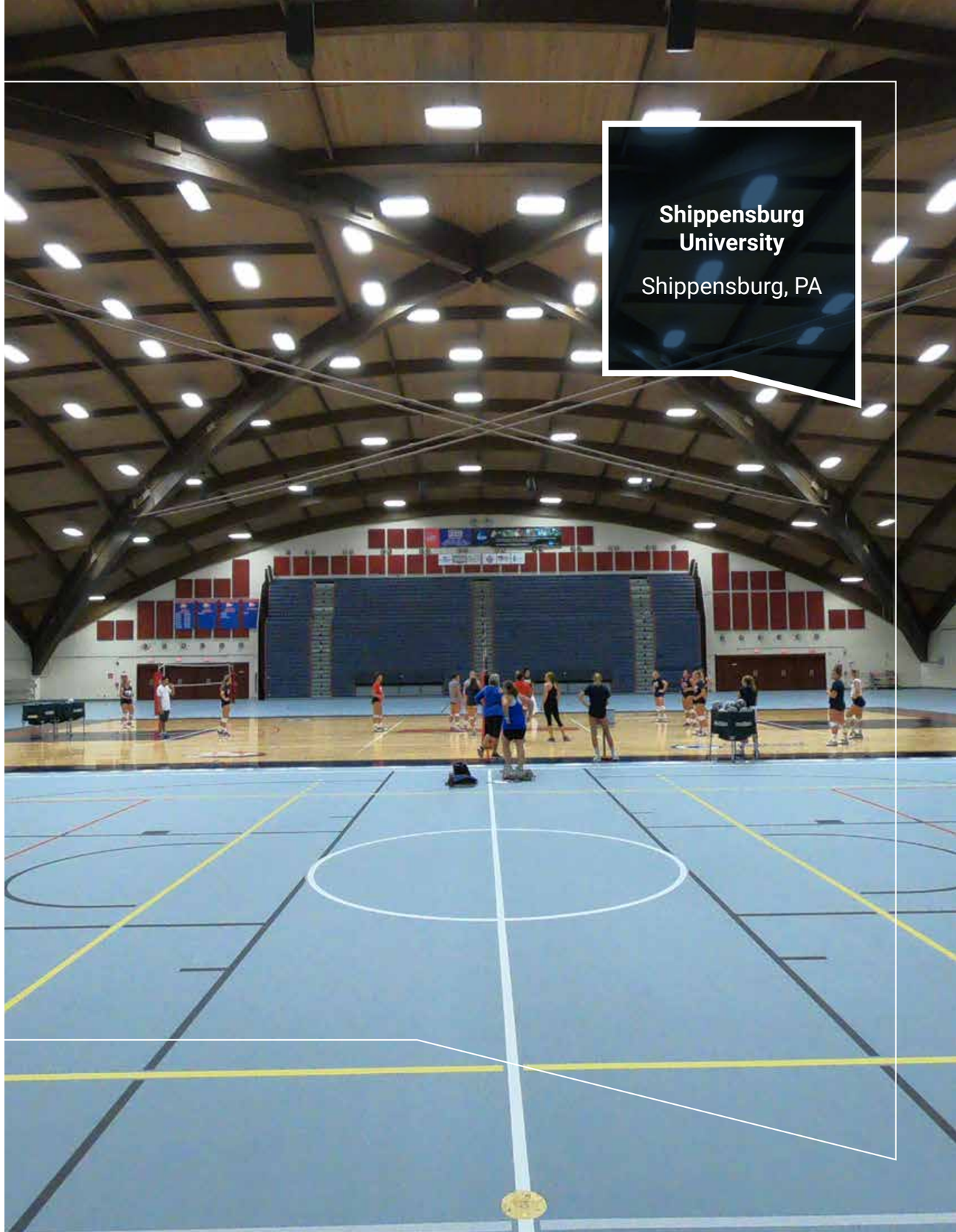

THE COLLECTION

THE ULTIMATE INDOOR SPORTS FLOORING

POLYTURF PLUS PAD & POUR

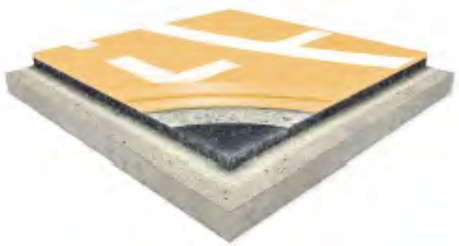

Available in 4mm, 7mm, & 9mm thicknesses. This field-constructed system includes a 100% recycled rubber base mat for comfort and shock absorption.

POLYTURF PLUS PAD & POUR WITH LUMAFLEX

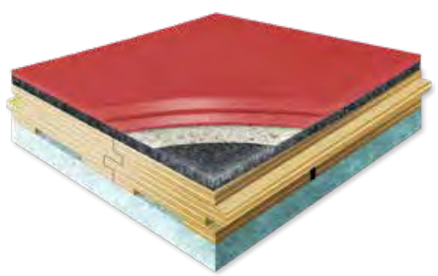

LUMAFLEX

Shock-Absorbing Foam
Class 4 per ASTM F2772

The Lumaflex and Lumaflex Elite systems upgrade your Polyturf Plus Pad & Pour floor by adding a layer of 18 mm birch plywood planks.

Regardless of the Lumaflex system, they can be modified to meet height requirements, especially when replacing a wood floor within an existing recessed slab.

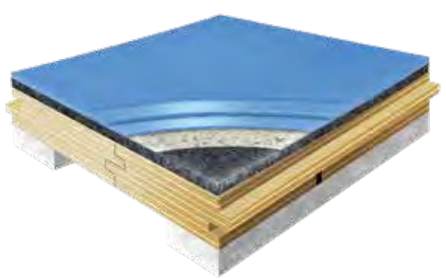

LUMAFLEX ELITE

Premium Elite Cushion
Class 5 per ASTM F2772

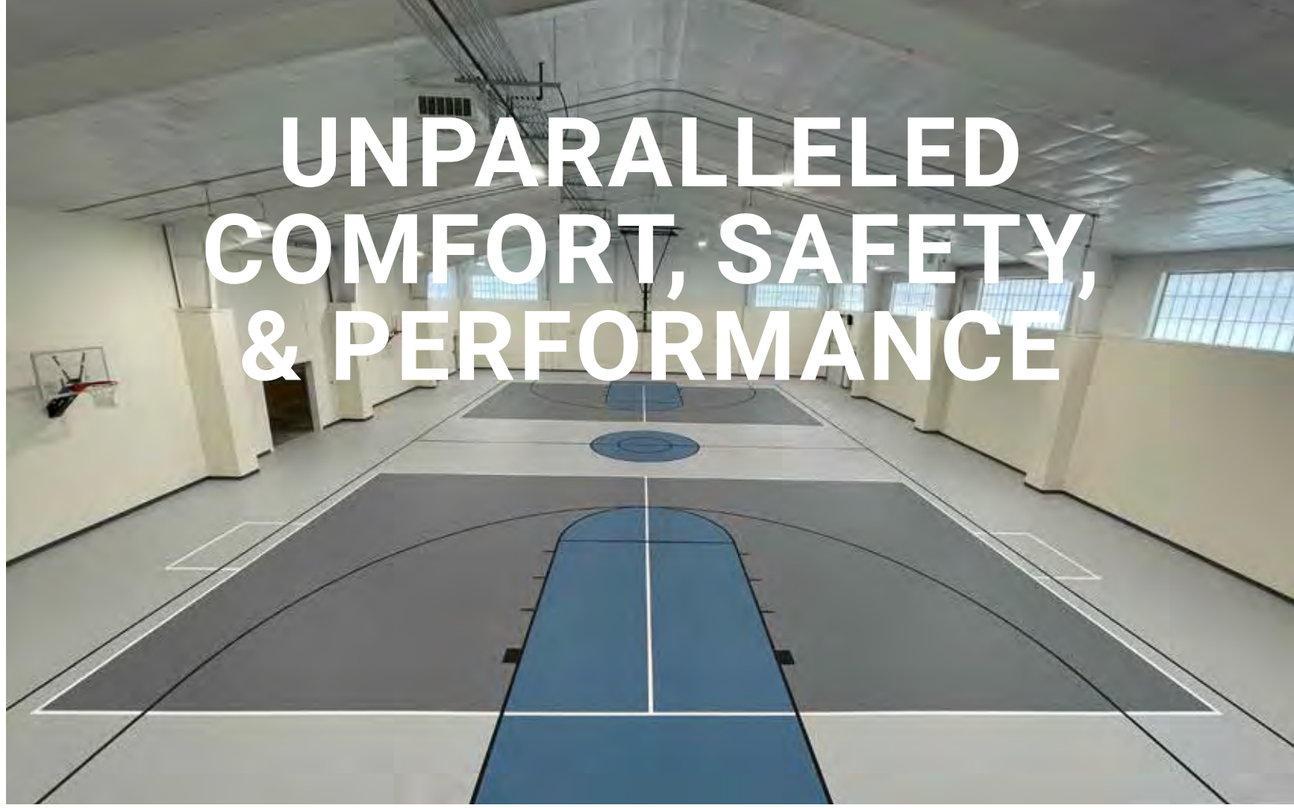

EXTREME DURABILITY, COMFORT & PERFORMANCE

The 18 mm birch plywood planks are made from an extremely stable species of wood that provides a uniform structure for resilient sports surfaces. Lumaflex is ASTM F2772 Class 4 and Class 5 certified, offering high shock absorption and more uniformity. It is one of the best solutions for reducing fatigue and increasing comfort.

THE PERFECT COMBINATION

Lumaflex combines point-elastic surface properties with an area-elastic substructure. This gives athletes significantly more comfort thanks to great vertical deformation and cushioning than they would experience with a basic area-elastic hardwood floor. By engaging both types of elasticity, Lumaflex responds to impact both locally and across the wider surface area. As a result of this dual response, they are widely regarded as one of the best sports floors for comfort, safety, and sports performance.

RELIABLE BONDING AND ASSEMBLY:

Each plywood plank incorporates an interlocking tongue-and-groove edge for fast and reliable installation.

MULTI PURPOSE ADVANTAGE

Your hybrid floor is more than a high-performance surface; it is also a multipurpose floor with unlimited possibilities and benefits. There's no need for a floor cover because a Lumaflex system – combined with a PolyTurf Plus surface – is extremely durable.

ELEVATE YOUR GAME

POLYTURF PLUS PAD & POUR WITH TARKOLAY

Every flooring installation is different. In some cases, high moisture, cracks, joints, or other factors present challenges that require an underlayment. Tarkolay separates the flooring system from the slab, removing the ability for vapor pressure to form. Tarkolay can also assist with challenges from other concrete imperfections at the surface.

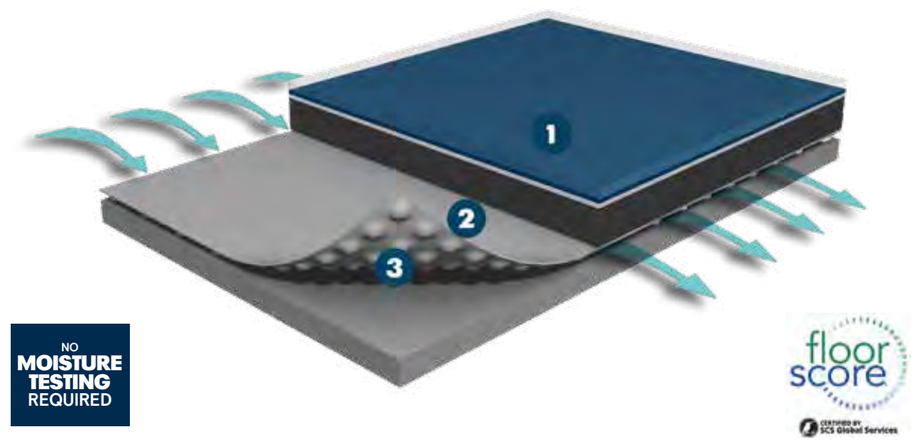

1

ISOLATION OF THE SPORTS SURFACE

Tarkolay mitigates adverse conditions by separating the sports surface from the subfloor. Through isolation, an imperfect subfloor is less likely to affect the integrity of the surface installation.

2

DIMENSIONALLY STABLE UNDERLAYMENT

Tarkolay is a dimensionally stable underlayment with a smooth surface for excellent adhesion to the sports floor.

3

RAISED TEXTURE FOR DISPERSING WATER VAPOR

The embossed texture of Tarkolay allows water vapor from the subfloor to dissipate without building pressure that would harm the integrity of the installation.

PERFORMANCE

Tarkolay can address concrete moisture conditions and does not require any initial moisture testing. It is also a FloorScore® certified underlayment that can resolve high moisture and other issues while still maintaining the highest standard of indoor air quality.

floor score

CERTIFIED BY SCS Global Services

LOW VOCS AND BETTER INDOOR AIR QUALITY

- A healthy indoor environment begins with low levels of volatile organic compounds (VOCs).
- VOC emissions less than 10 micrograms per cubic meter* A lower VOC emission rate than most other resilient sports floors
  *VOCs after 28 days (ISO 16000)
- Complies with California Section 01350, the most stringent air quality regulations in the U.S.

INSTALLATION METHODS

MULTI-POXY ADHESIVE

installation using Tarkett's solvent-free Multi-Poxy adhesive, which allows moisture tolerance of up to 98% relative humidity per ASTM F2170.

BEYBOND 50 ADHESIVE:

installation using Beybond 50 two-part polyurethane adhesive, which allows moisture tolerance of up to 95% relative humidity per ASTM F2170.

TARKOLAY WITH MULTI-POXY:

installation over Tarkolay moisture barrier using Tarkett's solvent-free Multi-Poxy adhesive, which allows moisture tolerance of up to 100% relative humidity per ASTM F2170.

POLYURF PLUS PAD & POUR

Chula Vista US Olympic & Paralympic Training Center

Chula Vista, CA

TECHNICAL DATA

SPECIFICATIONS

4+2, 7+2, 9+2

CERTIFICATION & CLASSIFICATION	STANDARDS	POLYTURF PLUS PAD & POUR 4+2	POLYTURF PLUS PAD & POUR 7+2	POLYTURF PLUS PAD & POUR 9+2
TECHNICAL CHARACTERISTICS				
Total Thickness		6.0 mm (0.236")	9.0 mm (0.354")	11.0 mm (0.433")
Weight (Base Mat)		2.59 kg/m2 (0.53 lbs./sq. ft.)	4.5 kg/m2 (0.93 lbs./sq. ft.)	5.86 kg/m2 (1.2 lbs./sq. ft.)
Roll Width (Base Mat)		1.5 m (59")	1.5 m (59")	1.5 m (59")
Roll Length (Base Mat)		25 m (82')	25 m (82')	25 m (82')
SPORTS CHARACTERISTICS				
Surface Finish Effect	ASTM F2772-11	Passed	Passed	Passed
Force Reduction	ASTM F2772-11	Class 1	Class 2	Class 2
Vertical Deformation	ASTM F2772-11	Passed	Passed	Passed
Ball Rebound	ASTM F2772-11	Passed	Passed	Passed
TECHNICAL REQUIREMENTS				
Reaction to Fire	ASTM E648	Class 1 (Radiant Panel)	Class 1 (Radiant Panel)	Class 1 (Radiant Panel)
Shore Hardness		80 (Shore A)	80 (Shore A)	80 (Shore A)
Tensile Strength	ASTM D412	3200 PSI	3200 PSI	3200 PSI
Elongation	ASTM D412	340%	340%	340%
Tear Strength	ASTM D624	360 PLI	360 PLI	360 PLI
Health Certifications				
COLORS				
		50 Colors	50 Colors	50 Colors
WARRANTY				
Product and Wear		30 years	30 years	30years
Moisture Tolerance		10 years	10 years	10 years

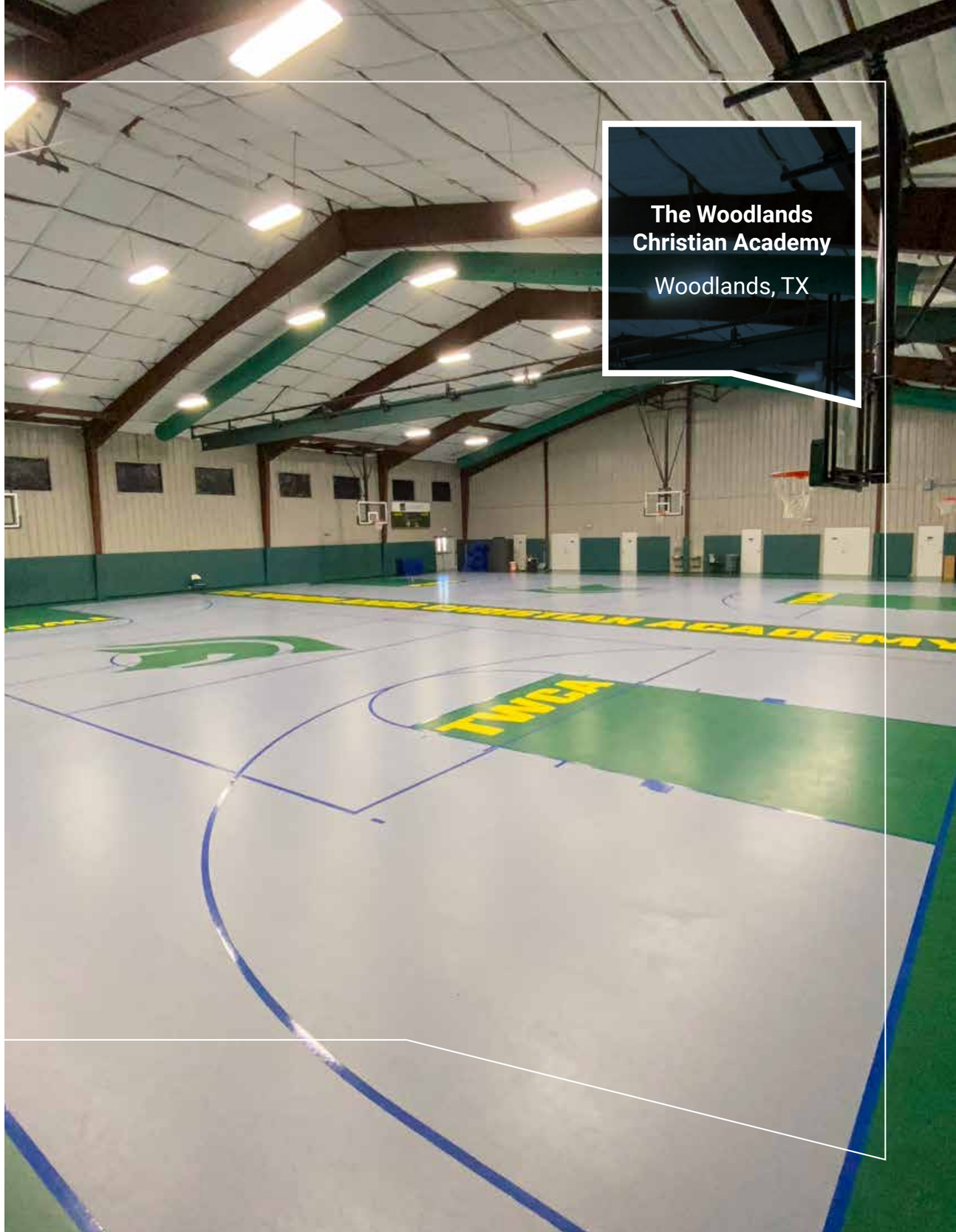

The Woodlands Christian Academy

Woodlands, TX

MANUFACTURING

MANUFACTURED BY A COMPANY YOU CAN TRUST

BEYNON®
A Tarkett Sports Company

Beynon Sports is the premier choice for track & field surfacing. Beynon Sports' specialized high-performance synthetic athletic surfaces are designed for speed, competition, and daily training. Beynon controls all aspects of the manufacturing chain, which allows them to create the right product, regardless of the facility.

DESIGN

PolyTurf Plus Pad & Pour is proudly American-made. We provide a seamless polyurethane structural layer that is strong and durable. Its design and appearance are simple; its performance is anything but.

FORMULATION

Our philosophy on materials selection is simple: use only the best environmentally friendly, bio-based raw materials because we understand that the material choices we make today will affect your athletes for years to come.

MANUFACTURING

PolyTurf Plus Pad & Pour is manufactured in Hunt Valley, Maryland, USA. Our world-class plant is one of the most advanced in North America. The facility is one of the few in the industry to have its Quality Management Systems certified to ISO 9001-2015.

INSTALLATION

With an exceptionally quick curing rate, PolyTurf Plus Pad & Pour can be installed and ready to use in a relatively short time frame.

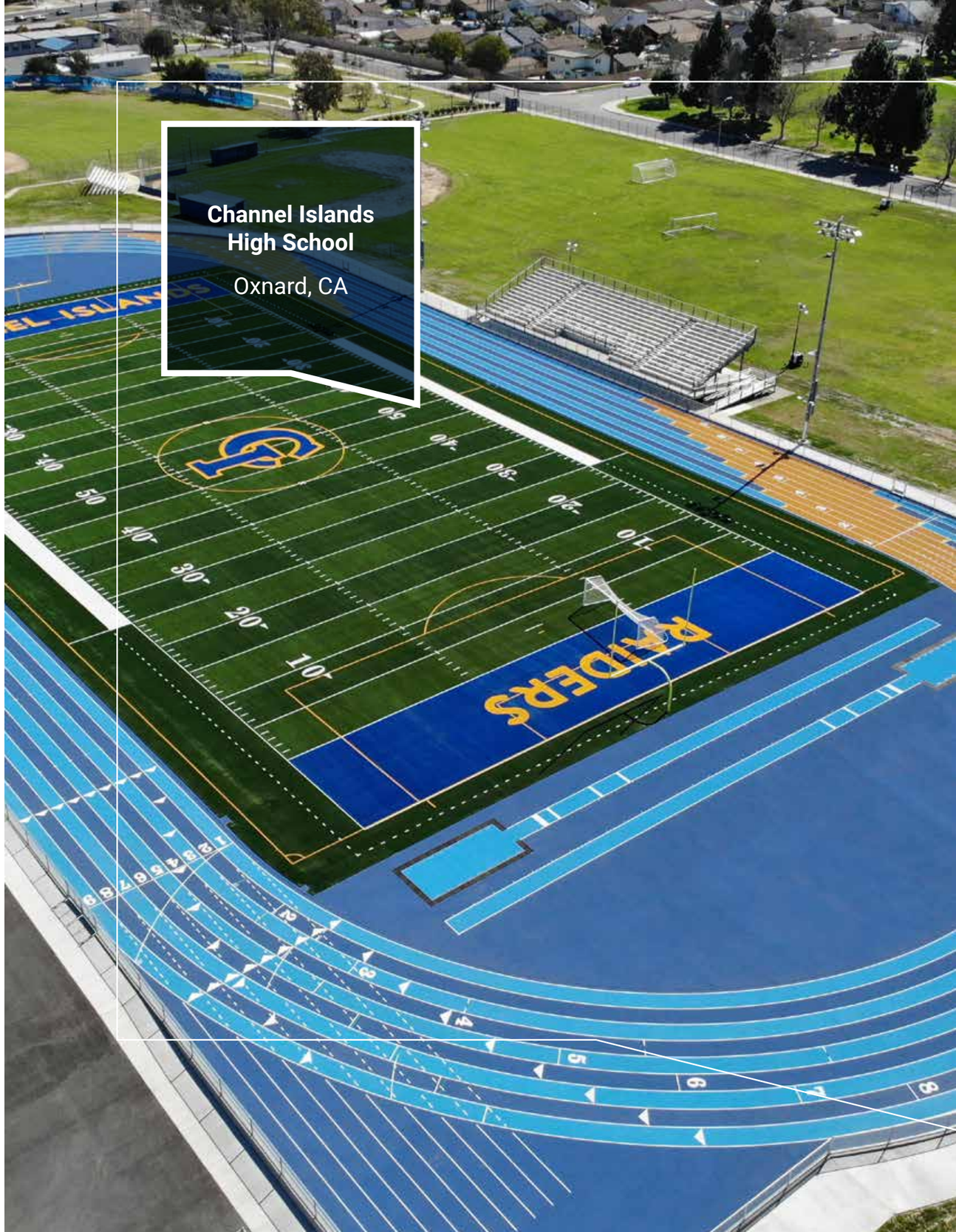

COLORS THAT ELEVATE

FIND YOUR PERFECT FLOORING MATCH

COLOR OPTIONS

DESERT 1200-0015	SMOOTHIE 1200-0068	CLASSIC TAN 1200-0089	BEIGE 1200-0133	GALLANT GOLD 1200-0123
GOLD 1200-0043	PURDUE GOLD 1200-0162	GREY 1200-0060	DOLPHIN GREY 1200-0004	MORNING FOG 1200-0066
GREY SMOKE 1200-0077	LIGHT GREY 1200-0083	GREY CLOUD 1200-0085	STORM GREY 1200-0102	GAUNTLET GREY 1200-0154
MID-GREY 1200-0180	GREY SCREEN 1200-0184	GREEN 1200-0113	GARDEN GREEN 1200-0062	SAGE GREEN 1200-0006

GRASS GREEN 1200-0093	TROPICAL GREEN 1200-0135	GARDEN CUCUMBER 1200-0155	BOYDEN GREEN 1200-0169	BLUE 1200-0161
OCEAN BLUE 1200-0011	ROYAL BLUE 1200-0037	BLUE CHIP 1200-0063	TARKETT BLUE 1200-0092	POOL BLUE 1200-0096
BLUE JAY 1200-0125	SOUTHERN BLUE 1200-0168	BLUE BLOOD 1200-0185	MIDNIGHT BLUE 1200-0070	DEEP BLUE 1200-0111
DARK NAVY BLUE 1200-0081	CHAPEL HILL BLUE 1200-0073	BRIGHT RED 1200-0044	REAL RED 1200-0084	SUNDRIED TOMATO 1200-0122
RED THEATRE 1200-0182	ORANGE 1200-0094	BRIGHT ORANGE 1200-0065	YELLOW 1200-0095	VIBRANT YELLOW 1200-0149
BUTTERFIELD YELLOW 1200-0177	PINK PANTHER 1200-0186	PURPLE 1200-0175	BLACK 1200-0091	WHITE 1200-0090

The images shown herein are intended for illustrative purposes only and are not exact representations of the actual products. Size, colors, and materials may vary.

TRUSTED AT ALL LEVELS

OVER 5,000 INSTALLATIONS IN NORTH AMERICA

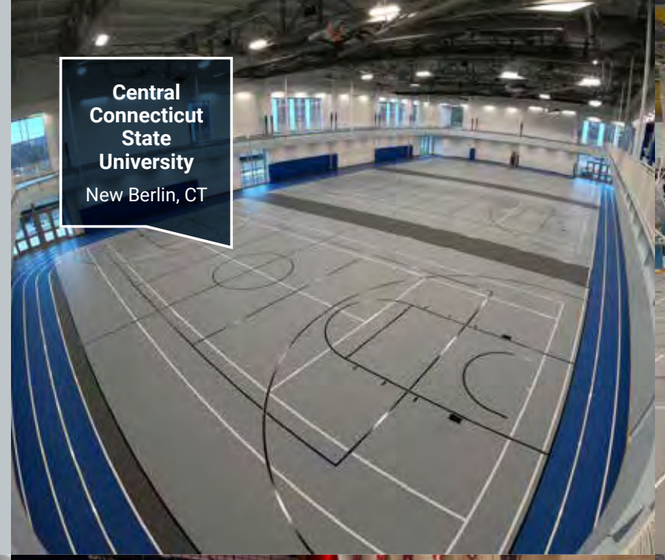
Central Connecticut State University
New Berlin, CT

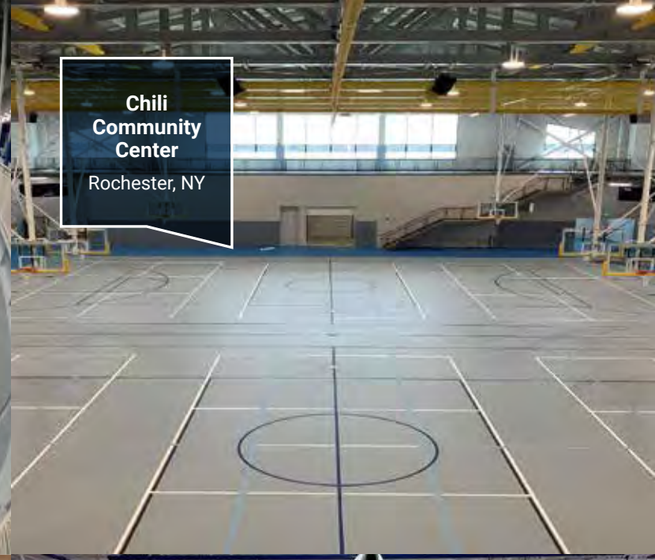
Chili Community Center
Rochester, NY

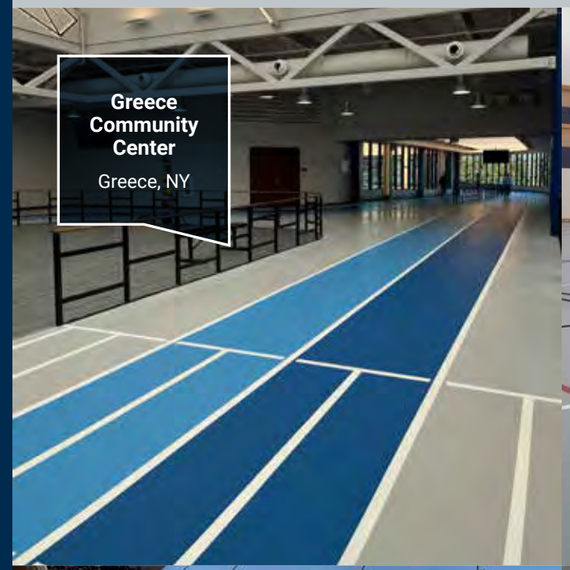
Greece Community Center
Greece, NY

Anchorage School District
Anchorage, AK

Frostburg State University
Frostburg, MD

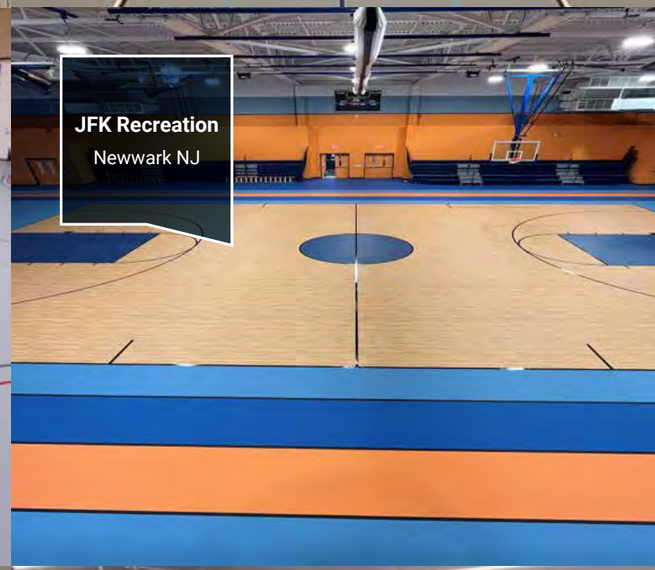
JFK Recreation
Newwark NJ

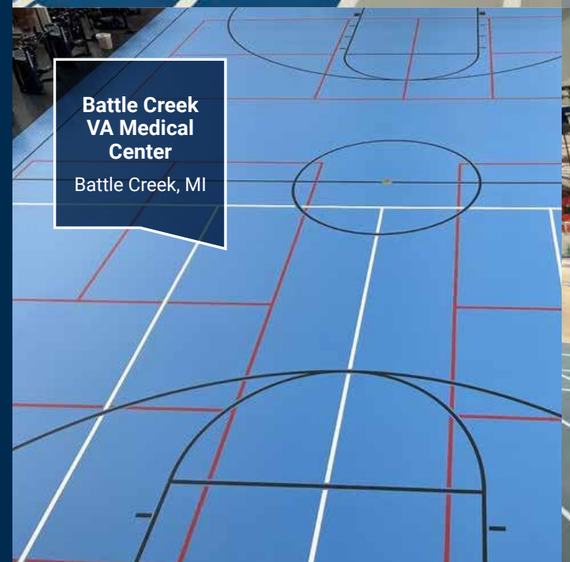
Battle Creek VA Medical Center
Battle Creek, MI

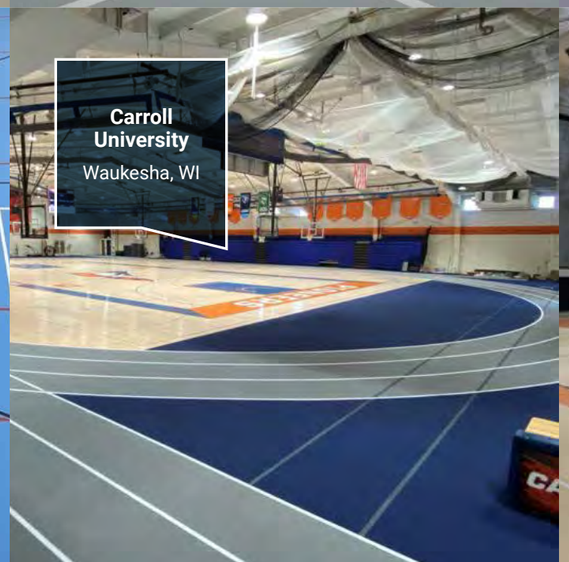
Carroll University
Waukesha, WI

Middletown North High School
Middletown, NJ

Vistara Sports Complex
Lewisville, TX

A COMPLETE PACKAGE PLAYER

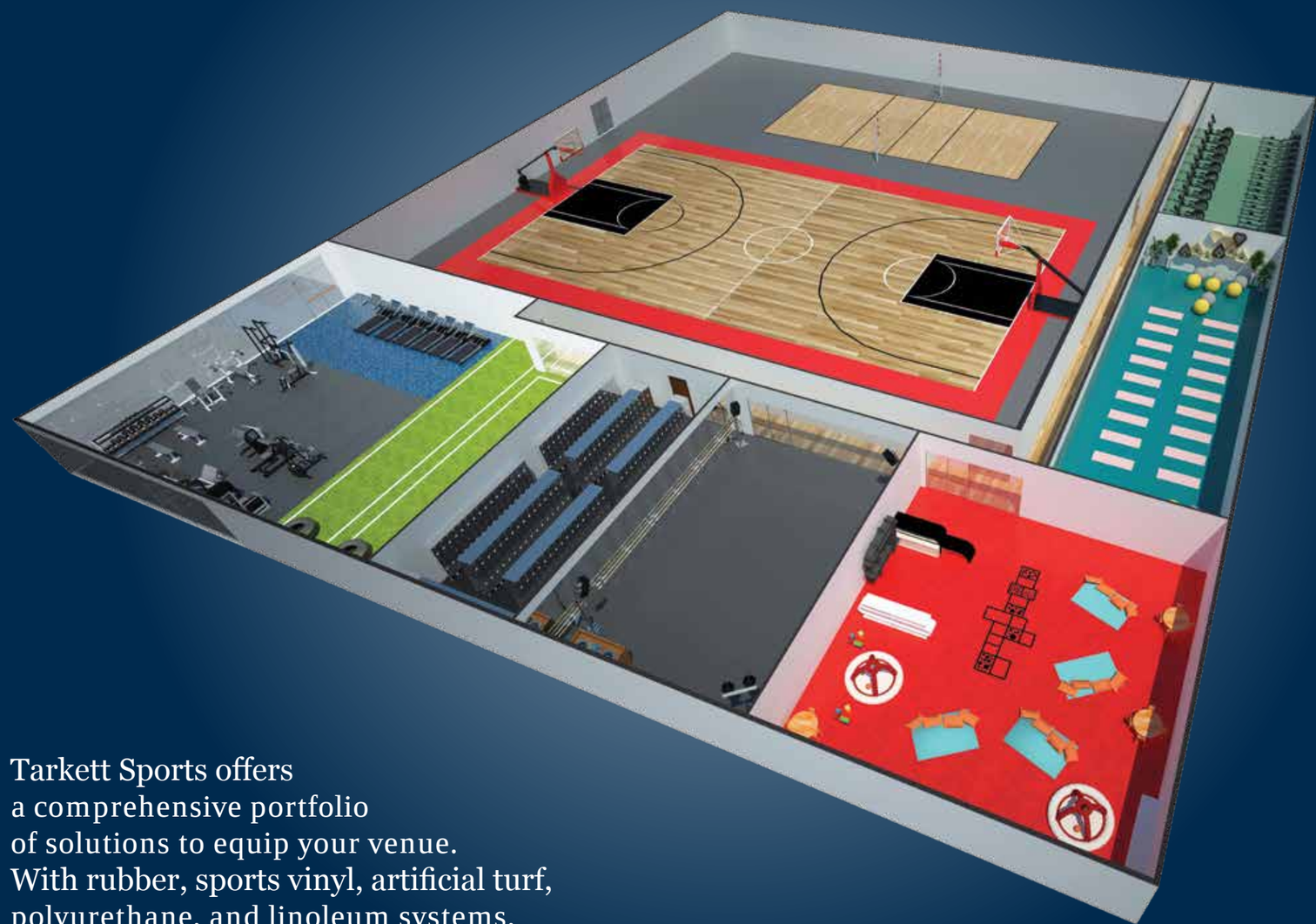

Tarkett Sports offers
a comprehensive portfolio
of solutions to equip your venue.
With rubber, sports vinyl, artificial turf,
polyurethane, and linoleum systems,
we offer your program a complete package.

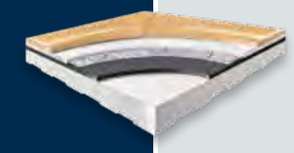

OMNISPORTS
SPORTS VINYL

Applications: Gymnasium • Daycare • Multi-Purpose Rooms • Cafetorium • Yoga • Martial Arts

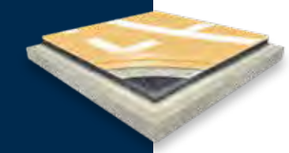

POLYTURF PLUS PAD & POUR
POLYURETHANE

Applications: Multi-Purpose Rooms • Cafetorium • Gymnasium • Inline Skating

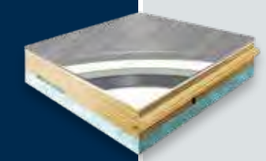

LUMAFLEX
COMBINATION SYSTEM

Applications: Gymnasium • Multi-Purpose Rooms • Inline Skating • Aerobic & Fitness

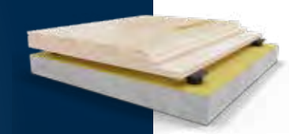

CLUTCHCOURT
HARDWOOD

Applications: Gymnasium (Basketball & Volleyball) • Aerobics • Racquetball

DROPZONE
RUBBER

Applications: Weight Rooms • Strength & Cardio Equipment • Spinning • Training Turf • Functional & Extreme Training • Ice Rinks

DANCEFLOOR
SPECIALTY VINYL

Applications: Dance Studio • Dance Stage

LINOSPORT
LINOLEUM

Applications: Multi-Purpose Rooms • Gymnasium • Daycare

DROPTURF
SYNTHETIC TURF

Applications: Recreation & Fitness

PLAY
TO WIN

THE TARKETT SPORTS FAMILY – LEADERS IN SPORTS SURFACING

FieldTurf® A Tarkett Sports Company | BEYNON® A Tarkett Sports Company | renner® A Tarkett Sports Company | Tarkett SPORTS CONSTRUCTION | Tarkett SPORTS INDOOR | FieldTurf® LANDSCAPE A Tarkett Sports Company | GRASSMASTER By Tarkett Sports

© Copyright 2024. FieldTurf USA, Inc. All Rights Reserved.

Tarkett SPORTS INDOOR

888-364-6541

tarkettsportsindoor.com

Innovation
With Purpose

Our **Commitment**

Protect People & Planet; that's our sustainability commitment

That means our innovation isn't limited to product specs. Our promise to keep players safe on our turf has naturally evolved into an obsession — one with a singular focus to completely eliminate its potential to harm not just people but the environment, too. Now in everything we do, we strive for the lowest impact on people and the planet — from our zero turf to landfill commitment, to circular design, to the utmost care for those who play on and handle our products.

Operational **Footprint**

KEY PILLAR

We're working year over year to minimize the environmental impact of our operations, including reducing the greenhouse gas emissions in our manufacturing processes, so you can rest easy knowing your field is contributing to your sustainability goals.

KEY PILLAR

Protecting **People & Athletes**

Safety is our #1 priority, always, whether it's keeping athletes safer on our fields or ensuring our own people are kept safe while they work. Through continuous advancements in our systems and processes, we strive not only to meet but to exceed safety standards, ensuring a superior experience for athletes and a secure workplace for our employees.

Beyond **the Field**

KEY PILLAR

Our dedication to responsible impact extends beyond the turf; it's about enhancing the lives within the communities we touch. Our products can help conserve local ecosystems and increase the availability of play areas, ensuring youth have consistent access to active, engaging sports environments.

KEY PILLAR

Purpose-Led **Products**

We offer a variety of sustainability-minded products to further improve the impact of your field. From natural infills to carpet recycling, FieldTurf products let you make the environmentally-conscious choice without sacrificing quality.

Powering **Positive Change**

Our Committment isn't New
We've Been Leading the Industry for Years

1995

FieldTurf is founded by two athletes who believe in a better game for all. They promise to Change The Game for athletes with a surface that offers improved performance and safety.

1997

The first 3rd-generation infill turf, a revolutionary playing surface, is installed at Ringgold High School in PA.

2009

Introduce the "Green Machine," the only unit able to remove both rolls of artificial turf and infill unharmed.

2010

The first field to be completely recycled.

Flagship manufacturing facility in Calhoun, GA opens, allowing for continued investment and focus on quality and excellence.

2014

The first infill recycling center in the Pacific Northwest is launched, enabling infill to be recycled from aged fields to avoid landfills.

2016

EcoMax — the first synthetic turf infill made partially of recycled materials — is introduced.

Safety study supported by FieldTurf wins AOSSM's STOP Sports Injuries Award, which recognizes top research leading toward significant awareness and change in the prevention of traumatic and overuse injuries in youth sports.

2019

ThermaGreen, creators of innovative shock pads made of post-industrial cross-linked polyethylene, is added to the FieldTurf family.

2021

FieldTurf introduces Goal Zero, a new commitment to divert 100% of job site and manufacturing waste from landfills by 2025 in North America.

2022

FieldTurf launches industry-first carbon offset program.

FieldTurf surface at Mercedes-Benz Stadium is fully recycled during replacement.

FieldTurf fibers are now produced with green energy at Morton Extrusionstechnik – electrical power.

2023

Tarkett's ambitious 2030 climate targets approved by the Science Based Targets initiative (SBTi) – Fully aligned with the Paris Climate Agreement objective.

Focused on **Reducing Our Impact**

We're continuously improving our operations to reduce FieldTurf's impact on climate change and help our clients achieve their climate goals, so the next generation of athletes can continue to play.

SBTi Approved

- Tarkett has set ambitious targets to reduce our Scope 1 and Scope 2 greenhouse gas emissions by 50% by 2030, which were approved by the Science Based Targets initiative (SBTi).
- SBTi is dedicated to driving ambitious climate action in the private sector by enabling organizations to set science-based reduction targets in line with the Paris Climate Agreement
- We've already reduced our emissions by 41% since 2019

We're harnessing renewable energy to reduce our manufacturing impact

- Tarkett has entered into renewable energy contracts to power our manufacturing sites. So far, 13 plants are running off of 100% renewable electricity - that's 44% of our energy consumption.
- FieldTurf polyethylene fibers are extruded with green energy. All of the electrical power consumed at Morton Extrusionstechnik, our state-of-the-art fiber extrusion plant, is certified to have been generated from renewable energies.

Going Beyond Mitigation

- With FieldTurf's carbon offset program, we're reducing our greenhouse gas impact further than what we can immediately reduce. Clients can now make the installation of their fields carbon-neutral through our partnership with the Carbonfund Foundation.

**Data representing 2023 achievements*

CARBON OFFSET

Join Our Journey **to Carbon Neutrality**

CARBON OFFSET

With the FieldTurf Carbon Offset Program, you can now calculate the exact emissions from your new surface and offset them so your project achieves carbon neutrality.

Step 1
Plan Your Facility

One size does not fit all. Location, product, size, and date can vary the impact of your project.

Once your scope and products are finalized, our proprietary carbon calculator will assess your total emissions.

Step 2
Calculate the Impact

FieldTurf's exclusive surface intensity calculator can calculate the exact amount of CO_2e emissions that will result from your project.

This is achieved by tallying the emissions from a field's specific materials, manufacturing, transport, and installation.

Step 3
Offset the Emissions

Your voluntary offsets are simply added to your invoice. Offsets are provided through the Carbonfund Foundation's Carbonfree® Partner Program.

This program funds third-party validated and verified renewable energy, forestry, and energy efficiency projects supporting a low-carbon transition for the planet. Every project will be awarded a certified carbon free sign to display at their facility.

Carbon emissions for each project are calculated using FieldTurf's proprietary surface intensity calculator. Actual emissions may occasionally vary due to uncontrolled project-related factors.

Committed to **Zero-Waste-to-Landfill**

In our efforts to improve the circularity of our value chain, we're eliminating waste and reducing the need for new materials in our products. We're offering our clients new opportunities to improve the environmental impact of their fields, from manufacturing efficiencies, to installation, to end-of-life.

17 MILLION LBS. RECYCLED

Over 17 million tires recycled into raw materials to build new fields annually

50 MILLION LBS. OF INFILL

Over 50 million pounds of infill cleaned and re-used in new fields

Data representing 2023 achievements

GOAL ZERO

- As part of our Goal Zero zero-waste-to-landfill commitment, FieldTurf is working to divert 100% of our job site and manufacturing waste from landfills by 2025 in North America. Partnering with us means moving one step closer to eliminating waste and transitioning to a circular economy.
- Through Goal Zero, over 350,000 lbs of job site waste was diverted in 2023.

Our fields are 100% recyclable

- All the components in the systems manufactured by FieldTurf are 100% recyclable. FieldTurf is expanding its partnerships with recycling facilities across North America to be able to recycle carpet from anywhere, anytime, once it's reached the end of its life.

Infill can be regenerated and re-used

- When replacing your aged surface, you can choose to either reuse the existing infill on your next project or leverage our Infill Take Back program. The reclaimed material is collected, cleaned, and recycled in future projects. Both options deliver a material that has been tested and proven to equal new infill in quality and durability, but with the added bonus of greatly reducing your project cost and carbon footprint.
- FieldTurf is dedicated to increasing our number of recycling facilities that can take back infill and reprocess it. The Infill Take Back Program may not be available in your area.

Field **Recycling**

Field **Recycling**

1

Field Removal

The aged carpet and infill are removed from the venue and prepared for transport.

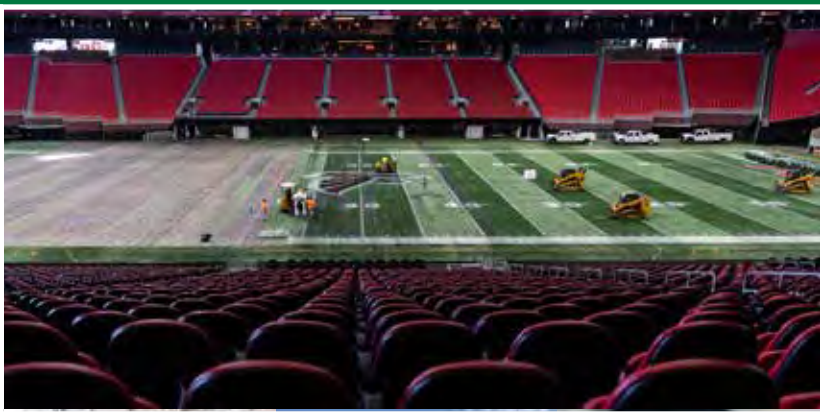

2

Infill Regeneration

The carpet rolls are sent to a Tarkett Sports recycling facility to extract the infill, clean it, and separate it for reuse.

3

Carpet Recycling

The aged carpet is sent to a specialized facility to be cut, processed, and refined into a blend.

4

Product Manufacturing

Using a proprietary process that upcycles the material into a high-grade polyurethane & polypropylene blend, the carpet can be transformed into various products like nailer boards, planters, and park benches.

A Better **Solution**

We were founded with the promise to create a better solution for athletes — and now we extend that dedication to all the lives we touch through investments in safety research, product performance, and respect for the well-being of our teams and our communities.

4 MILLION LBS. SAVED

Over 4 million pounds of fertilizer saved annually

When not managed properly, these materials can negatively affect plant, animal, and human environments.

Data representing 2023 achievements

Extensive athlete safety research

- FieldTurf collaborates with renowned research institutions like the University of Calgary and The Center for Sports Surface Research at Penn State on a variety of studies to help optimize player safety and performance, helping protect athletes and preventing injuries.

Reduce the need for fertilizers and chemicals

- With synthetic turf, there's no need to add fertilizers or spray harsh chemicals that may be harmful to athletes, communities, and the environment through direct exposure or runoff.

SmartTeam and cutting-edge research

- With the help of advanced biometrics and real-time analytics, the SmartTeam Project will collect millions of data points obtained through athlete-monitoring wearables, video analytics, and surface testing. The project's mission is to translate the findings into tangible learnings that could result in meaningful change for athletes.

Tarkett Human-Conscious Design®

- All of our surfaces are designed with people and the planet as our first priority. Since Tarkett's inception, we've worked diligently to create healthier spaces and improve the quality of life of our fields' users.

We've Got **Your Back**

FieldTurf isn't just committed to protecting the athletes who use our fields, we also work tirelessly to support our team in everything they do, and it shows in the quality of the fields we design and install.

Keeping our people safe

FieldTurf is continuously looking for opportunities to mitigate health and safety risks in our operations, with a goal to reach a 1.0 injury frequency rate (Recordable Lost Time Accident Frequency Rate FR1t) by 2025.

DEI

We're an equal opportunity employer with a zero tolerance policy for harassment and discrimination in the workplace. On top of encouraging an inclusive culture, we also incorporate diversity considerations into our recruitment processes, and we conduct employee feedback surveys to understand how we can further improve our culture.

Empowering
Tomorrow's Champions

We believe in shaping a brighter future through the power of sport and community. By focusing on protecting the future of play, our 'Better Tomorrow' represents the charitable spirit of our organization, dedicated to empowering sports and coaches in need through meaningful partnerships and support. Our program is more than just a pledge; it's an active engagement in uplifting communities, fostering an environment of inclusivity, and nurturing the growth of sportsmanship and talent.

Partners with Good Sports, who helped equip over 475,000 kids in 2023.

Women Leaders in Sports partners with prominent women in the sports world who develop, connect, and champion women to advance and be powerful influences in sports.

Partners with the Cure Classic All-Star Game, part of the Orlando Sports Foundation and its mission to "bring teams together to find a Cure for Cancer".

Partners with Make-A-Wish® Georgia, helping grant wishes for exceptional kids in Georgia

The High School Broyles Award is presented by FieldTurf, honoring the nation's top high school assistant football coaches.

Partners of leading national associations to support future generations of coaches & athletes.

Supported over 800 community initiatives with employees volunteering 3,500 days and over 1.1 million euros of product donations between 2017 and 2022 through our Tarkett Cares program.

Our commitment to offering your program with an extensive portfolio of purpose-led products is unwavering. We continue to invest in product development and innovation to design the most sustainable synthetic turf systems in the industry.

One Step Ahead to Offer You **Unique Solutions**

FieldTurf Offers a Leading **Portfolio of Alternative Infills**

Made from natural materials, helping divert waste from landfills.

PureFill

Harvested from cork oak trees every nine years, without harming the trees.
USDA Certified Biobased Product.

PureSelect

Granulated olive cores.
USDA Certified Biobased Product.

PureCob

Granulated woody-ring portion of corn cobs.
USDA Certified Biobased Product.

PureGeo

Granulated coconut, peat, and cork mix.

Our **SuReTec™** program relies on chemical recycling using mass balance pyrolysis oil from post-use end-of-life plastics and mechanical recycling converting plastic waste into new secondary raw materials to reduce the amount of virgin plastics used to make artificial turf fiber.

ACROSS OUR GROUP, WE'RE LEADING THE FIELD IN SUSTAINABILITY. LEARN ABOUT OUR ACHIEVEMENTS:

Tarkett

TARKETT HUMAN CONSCIOUS DESIGN™

Our commitment to stand with present & future generations. To create flooring and sports surfaces that are good for people and for the planet. And to do it every day.

It's a holistic way of doing business, capable of marrying the specific expectations of each of our customers with the profound challenges of protecting our planet. Working together with our partners, we deliver safer and healthier spaces in which people can reach their full potential.

For over 140 years, we have proudly been undertaking this commitment. We launched our first recycling-focused circular economy initiative in 1957, have raised indoor air quality standards for more than a decade, and excel in researching and designing solutions for diverse environments.

We hold people and the planet at the heart of our operations–and we're dedicated to proving it, day after day.

Preserving resources through circular economy

RENEWABLE, ABUNDANT OR RECYCLED MATERIALS

69% of raw materials do not contribute to resource scarcity

RECYCLED RESOURCES

154,000 tons of recycled materials in production

18% of our raw materials are recycled materials

2030 global objective: 30%

FLOORING TAKE-BACK

close to **119,000**

tons of flooring collected from 2010 to 2022 by Tarkett ReStart® collection and recycling program in our 8 recycling centers across the globe

WATER CONSUMPTION

-61% versus 2010 (m^3)

69% of plants equipped with a closed loop water system

Fighting climate change

RENEWABLE ENERGY

13 plants purchasing 100% renewable electricity

44% of total energy consumption comes from renewable energies

GREENHOUSE GAS EMISSIONS

-47% Scope 1 & 2 versus 2019

2030 objective: -50% vs. 2019 & -30% scope 1+2+3 vs. 2019

132,682 tons CO_2e

(Scope 1 & 2) in 2023 from production sites and car leasing

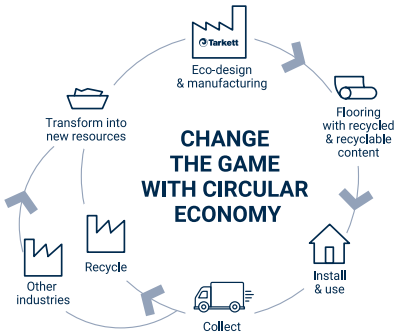

250 euros / ton CO_2e

This is the shadow carbon price we apply internally to assess the impact of our investments on our carbon footprint

Using good materials for people's health and the environment

CRADLE TO CRADLE® MATERIALS ASSESSMENT

94%

of our raw materials are third-party assessed for their impact on people's health and the environment based on Cradle to Cradle® criteria

INDOOR AIR QUALITY

99%

of flooring solutions have low VOC (volatile organic compounds) emission levels (10 times lower than the most stringent world standard)

HEALTHY INDOOR ENVIRONMENT / PHTHALATE-FREE

96%

of our flooring solutions containing PVC (vinyl and carpet) are phthalate-free[1] on a global level (% of m² produced)

Respecting and developing teams

SAFETY

3.28

2025 objective: 1.0

injury frequency rate (Recordable Lost Time Accident Frequency Rate FR1t)[2]

DIVERSITY

29%

2025 objective: 30%

of women among managers & senior executives

INTERNAL MOBILITY

65%

2025 objective: 70%

of open management positions filled by an internal candidate

Supporting local communities and global initiatives

COMMUNITY SUPPORT

900

community initiatives with employees volunteering **3,800** days and **over 1.2 million euros** of product donations between 2017 and 2023

EXPERTISE SHARING

60,000

professionals or students trained as professional installers or in flooring installation techniques from 2012 to 2023

Engaging with our value chain to promote climate solutions and circular economy

Deploying our responsible sourcing program

90% of requested suppliers completed a third-party CSR assessment (in spend)

Engaging with customers, architects, designers and end-users

38 showrooms in 21 countries

[1] *Except recycled content for certain products and countries.*
[2] *Number of accidents with lost time < & > 24 hours per million worked hours.*

© Copyright 2024, FieldTurf USA, Inc. All Rights Reserved.

SUSTAIN THE GAME

INNOVATION WITH PURPOSE

FieldTurf®
A Tarkett Sports Company

fieldturf.com

FieldTurf®
A Tarkett Sports Company

NON-INFILL SYSTEMS ARE A NON-GAME CHANGER

NON-INFILL SYSTEMS ARE A NON-GAME CHANGER

NON-INFILLED TURF SYSTEMS HAVE BEEN AROUND SINCE 1965 (REMEMBER THE ORIGINAL ASTRODOME CARPET) AND HAVE BEEN OFFERED BY A MULTITUDE OF SUPPLIERS SINCE.

.....

FieldTurf also offers a wide variety of non-infilled turf systems, but as part of our landscape/residential portfolio, and for specialty sports like field hockey (FieldTurf Hockey Speed & Gold) and portable panels (FieldTurf EasyField).

FieldTurf has long offered non-infilled turf systems but we understand they're not the right solution for every project. We wouldn't describe this technology as a game changer. Aside from specialty sports, athletes have long criticized non-infilled turf systems...that criticism is what motivated our founders to invent long-pile, infilled turf systems, which led to the growth and popularity of FieldTurf worldwide.

.....

In 2015, AstroTurf announced the installation of their "innovative" Green Series (previously Golden Series) system with ZeoFill at Jesuit High School (CA), which they describe as "an extremely dense, short-pile turf system."

Less than two years after installation, the field experienced issues with traction. On February 28, 2017 the Turlock High School varsity boys' soccer team travelled to Jesuit High for the Division-I Sac-Joaquin Section semifinal. Turlock head coach provided the following comments to the Turlock Journal:

"Over a dozen players from both teams slipped after just 30 minutes on the pitch. The number jumped to 30 altogether for the entire game and included falls from both goalkeepers after a goal kick."

"Not sure what the deal was with this field. Guys were on ice skates out here, it was hard for a lot of guys to get any footing or get any momentum or rhythm as well. The field was so slick I am not really sure what this stuff is or what is going on with it... It didn't make things any easier."

HEAD COACH - VARSITY BOYS SOCCER TURLOCK HIGH SCHOOL

Source

NON-INFILLED TURF: A TIMELINE

1965: A non-infilled, nylon carpet-based system, AstroTurf Introduced

1965 – 1990's: Customer dissatisfaction mounts:

"Playing on AstroTurf is like playing on a street." **– Deion Sanders**

"I wish I had never seen Astroturf." **– Gale Sayers**

1990's: FieldTurf, a long-piled, infilled turf system, is introduced to the market and revolutionizes the turf industry.

2015: AstroTurf launches Golden / Green Series

2023: TenCate Grass launches non-infilled series (Pivot, Greenfields Pure)

2024: FIFA Releases their new manual which declares "Mineral-infill stabilized, mineral-infill filled and **non-filled systems** are currently under development for football and are not yet approved by FIFA. As a result, fields that feature these systems **cannot be awarded FIFA Quality or FIFA Quality Pro certification."**

FieldTurf®
A Tarkett Sports Company

NON-INFILL SYSTEMS ARE A NON-GAME CHANGER

JESUIT HIGH SCHOOL WASN'T ALONE

BELLE VERNON HIGH SCHOOL (PA)

The "Trib" wrote about the issues in an article titled "BVA addresses slippery field turf". Belle Vernon was initially installed with "rounded silica sand to add ballast to the field" and was subsequently top dressed with crumb rubber.

The traction issues were highlighted by comments that *"During last Friday's BVA-Ringgold gridiron showdown, players who slipped and fell affected nearly a dozen plays. One Leopards receiver wiped out on what could have been a long pass completion."*

Source

Superintendent Dr. John Wilkinson concluded that the field being *"continually used"* had *"led to increasingly slippery conditions, particularly when the surface is moist or wet"* and that the school had "...made AstroTurf aware of [their] less-than-perfect traction concern and they put a plan into action."

AstroTurf no longer offers their "Green Series" in the market.

IS EUROPE TRENDING TOWARDS NON-INFILLED SYSTEMS?

NO.

Top European market leaders, including FieldTurf, have been working to develop non-filled turf solutions with very limited success.

Look no further than the 2018 Fieldmanager article titled Problemen met non-infill-kunstgrasvelden, which translates to "Problems with non-infill artificial turf fields."

"The innovative rubber and corkless artificial grass mats are considered too slippery by players, which has already led to injuries at several clubs."

Source

FIFA supported these concerns with a major change to their 2024 manual by recognizing limited market acceptance and pushback from athletes, clubs and federations, FIFA revised their manual and issues the following statement regarding mineral-stabilized, mineral-filled and non-filled turf system – declaring that they cannot be awarded FIFA Quality or Quality Pro Certification.

4.7 SYSTEMS: DEFINITIONS

Mineral-stabilised: system partly filled with mineral infill that does not exceed 25% of the non-elongated pile height.

Mineral-filled: system filled with mineral infill that exceeds 25% of the non-elongated pile height.

Non-filled: system without any infill.

4.8 SYSTEMS UNDER DEVELOPMENT

Mineral-infill stabilised, mineral-infill filled and non-filled systems are currently under development for football and are not yet approved by FIFA. As a result, fields that feature these systems cannot be awarded FIFA Quality or FIFA Quality Pro certification.

NON-INFILL SYSTEMS ARE A NON-GAME CHANGER

2024 RELEASE BY TENCATE

TenCate/Greenfields launch Pivot (US) and Pure (EMEA), a non-infilled turf system.

However, as the 2018 article in FieldManager stated, Greenfields is keenly aware of the issues with non-infilled systems and is clearly ignoring their own learnings:

"Supplier CSC Sport/ Greenfields and the municipality of Oss have been working on a solution for the field at Oss'20 in recent weeks. On Monday, November 12, the field was sprinkled with varying amounts of sand. The selection players were allowed to indicate which quantity was preferred. The field has also been treated with a special machine, so that the ball should move more naturally over the mat. CSC Sport/ Greenfields promised the club that it would resolve the problem before the end of the month."

SUMMARY OF NON-INFILL TURF

OLD DESIGN

Non-infill systems aren't a new technology.

NOT FIFA CERTIFIED

Non-infill systems cannot be awarded FIFA Quality or FIFA Quality Pro certification.

ATHLETES DISLIKE THEM

Over time, athletes have criticized non-infill systems for sports like football, soccer, and baseball.

POOR TRACTION

Numerous reports of poor traction on non-infill systems for sports like football and soccer.

SPECIALTY SYSTEM

Non-infill systems are not the right solution for every project but could be the right choice for specialty usage.

LIMITED SUCCESS GLOBALLY

Across numerous markets, non-infill systems have struggled to obtain wide success.

FieldTurf®
A Tarkett Sports Company

FieldTurf®
A Tarkett Sports Company

ELITE PERFORMANCE FROM DAY ONE

Our patent-pending, **ReadyNow** technology, accelerates the standard break-in period, getting your field the way you want it, right away! Thanks to advanced material science and groundbreaking surface modifiers, ReadyNow is another game-changer by FieldTurf.

After installation, an artificial turf field goes through a natural settling process, which is facilitated by player activity on the surface, and rain traveling through the sand and rubber system. However, in select scenarios, such as indoor stadiums, or surfaces used only for games as the program has a dedicated practice venue, organizations may prefer to accelerate that break-in period. In comes ReadyNow.

The solution is designed using a proprietary combination of a unique water-based multi-component surface modifier, **HydraCatalyst**, in combination with **FastBlend**, FieldTurf's performance-focused granulometric balanced infill, with optimum dimensional array and particle size distribution.

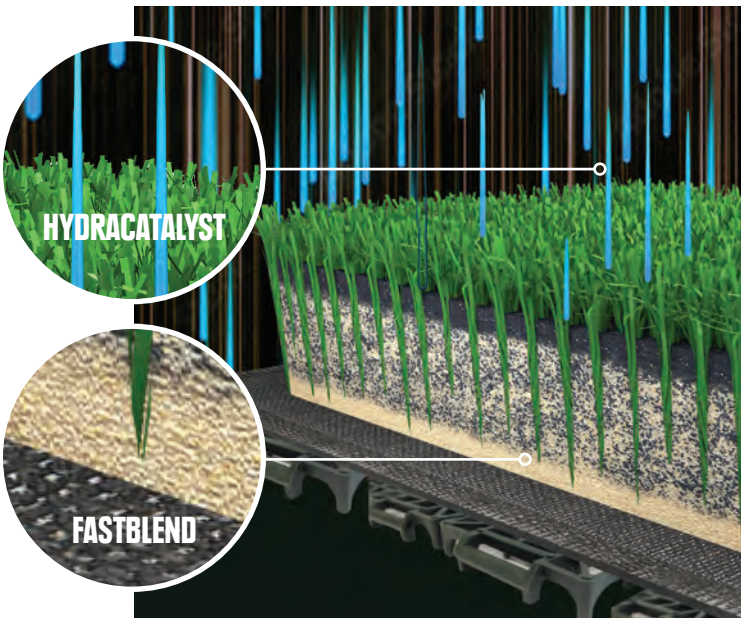

Tarkett SPORTS | FIELDTURF INNOVATION+ PERFORMANCE CENTER

FieldTurf®
A Tarkett Sports Company

ADVANCED TECHNOLOGY, ENHANCED TESTING:

Complementing the **ReadyNow** technology, FieldTurf has also developed the SportSense Playability Profile, a new testing protocol that more accurately replicates the tactile feedback athletes experience on the field. This protocol has proven to significantly enhance the measurement of surface stability, providing data that directly correlates with the stability athletes feel during play.

COMMITMENT TO SAFETY AND PERFORMANCE:

FieldTurf's dedication to player safety and performance is evident in every aspect of the **ReadyNow** technology. By balancing exceptional traction with the highest safety standards, the new system offers unparalleled safety and performance benefits for athletes at all levels.

ReadyNow represents the culmination of a multi-year development effort, involving extensive testing at premier venues and in collaboration with renowned university research partners, further demonstrating how the technology meets the highest standards of performance and durability.

*"**ReadyNow** sets a new industry standard. By leveraging critical customer feedback and focusing on athlete-centric design, we're not just reducing the break-in period—we're ensuring fields reach peak playing conditions immediately."*

Gregory Randall

Innovations Research Manager
FieldTurf.

READYNOW BUILDS ON FIELDTURF'S EXTENSIVE HISTORY OF LEADING THE INDUSTRY WITH NEXT-GENERATION PRODUCTS:

FIBER:
CORE & VERTEX CORE
LEADING CHOICE IN THE NFL

INFILL:
COOLPLAY
LEADING COOLING TECHNOLOGY

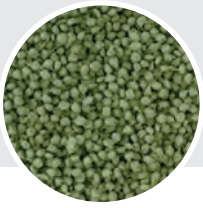

INSTALLATION:
READYNOW
PATENT-PENDING TECHNOLOGY

MAINTENANCE:
GENIUS
WORLD'S FIRST SMART FIELD

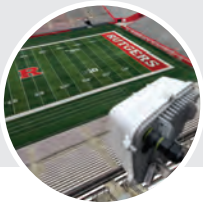

Tarkett SPORTS | FIELDTURF INNOVATION+ PERFORMANCE CENTER

FieldTurf®
A Tarkett Sports Company

THE LEADING CHOICE OF NFL TEAMS

FIELDTURF HAS BEEN AT THE SURFACE OF RENOWNED VENUES FOR OVER 25 YEARS

In 2024, our unwavering commitment to quality and the customer was highlighted through the completion of [5] installations for National Football League teams, each embodying our dedication to innovation, athlete safety, and performance.

FieldTurf replaced existing FieldTurf fields at Mercedes-Benz Stadium [Atlanta], Bank of America Stadium [Carolina], Gillette Stadium [New England], and Lumen Field [Seattle]. And FieldTurf installed a new surface at Paycor Stadium [Cincinnati].

We've identified that clients who invest time in understanding the complexities of artificial turf conclude that FieldTurf is the leading choice. Take the Cincinnati Bengals, as an example: The organization trusted FieldTurf after an extensive evaluation process that compared leading vendors in the artificial turf industry. Through a collaboration with the NFL (and its testing requirements), as well as stadium authorities and football experts, the organization leveraged compelling data on player safety and on-field performance, which pointed them towards a monofilament product that matched the league's recommended best practices. Their choice was FieldTurf CORE.

These projects not only demonstrate our leading reputation amongst premier organizations but also our industry-leading system innovation.

FIELDTURF IS THE LEADING CHOICE OF NFL TEAMS.
DISCOVER HOW FIELDTURF CONTINUES TO CHANGE THE GAME.

WHY FIELDTURF

LEADING FIBER INNOVATION

All NFL teams playing on FieldTurf, trust our CORE or Vertex CORE systems.

CORE, the first multi-layer dual-polymer fiber, rewrites the playbook for sports turf, reinvents the playing field, and redefines the player experience.

LEADING PLAYER-PERFORMANCE

FieldTurf's unique wide-gauge design delivers leading cleat release times.

Gauge represents he distance between the rows of stitched fibers.

LEADING PLAYER-SAFETY

FieldTurf's heavyweight infill systems were proven to deliver a lower incidence of total injuries.

Source: Meyers MC. Incidence, Mechanisms, and Severity of Game-Related HighSchool Football Injuries Across Artificial Turf Systems of Various InfillWeights. Orthop J Sports Med. 2019 Mar 25;7(3):2325967119832878. doi:10.1177/2325967119832878. PMID: 30937317; PMCID: PMC6434442.

LEADING READYNOW TECHNOLOGY

Our ReadyNow technology (patent pending) accelerates the standard surface break-in period, helping deliver optimal performance conditions, from day one.

ReadyNow is designed using a proprietary combination of an advanced surface modifier and granulometric balanced infill.

LEADING SUSTAINABILITY PROGRAM

FieldTurf's Sustain The Game sustainability program showcases industry-leading achievements & capabilities.

FieldTurf offers carpet and infill recycling solutions, as well as carbon offset program, and more.

LEADING MANUFACTURING QUALITY

Our Calhoun (GA) manufacturing facility is one of the most advanced in North America.

The facility is one of the only in the industry to have their quality management systems certified to ISO 9001-2015, ISO 14001-2015 and health & safety management system certified to ISO 45001-2018.

CINCINNATI BENGALS

PAYCOR STADIUM

Year: 2024
Product: CORE
Years on FieldTurf: 9 years, 2004-2011 (Paul Brown Stadium) 2024 new installation

"Hamilton County and the Bengals are committed to providing a top-level playing surface for NFL games, and this step confirms that commitment."

- STEVE JOHNSON
MANAGING DIRECTOR
PAYCOR STADIUM

NEW 2024

ATLANTA FALCONS

MERCEDES-BENZ STADIUM

Year: 2024
Product: CORE
Years on FieldTurf: 24 years, installed in 2000 (Georgia Dome)

CAROLINA PANTHERS

BANK OF AMERICA STADIUM

Year: 2024
Product: Vertex CORE
Years on FieldTurf: 3 years, installed in 2021

"We're excited to partner with FieldTurf. The surface offers versatility, durability, and resiliency, and we're confident that FieldTurf's Vertex CORE system is the right choice for the stadium."

– MARK HART
VICE PRESIDENT AND CHIEF OPERATING OFFICER
TEPPER SPORTS & ENTERTAINMENT

NEW ENGLAND PATRIOTS

GILLETTE STADIUM

Year: 2024
Product: CORE
Years on FieldTurf: 18 years, installed in 2006

"FieldTurf has been trusted at Gillette Stadium for almost 20 years, and we're happy to see that tradition continue with this latest installation. FieldTurf is an industry leader that continues to innovate and provide new and improved products that we love to feature at Gillette Stadium."

– JIM NOLAN
CHIEF OPERATING OFFICER
KRAFT SPORTS + ENTERTAINMENT

SEATTLE SEAHAWKS

LUMEN FIELD

Year: 2024
Product: CORE
Years on FieldTurf: 24 years installed in 2000

"We are proud to continue our long-standing relationship with FieldTurf as the industry leader in excellence and durability in new turf technology."

– ZACH HENSLEY
SEAHAWKS VP OF OPERATIONS & GENERAL MANAGER
LUMEN FIELD

DETROIT LIONS

FORD FIELD

Year: 2023
Product: CORE
Years on FieldTurf: 24 years, installed in 2000

"Providing the highest caliber facilities possible is a top priority of our organization, and the fields our players play and practice on is continually evaluated for safety and performance. We are proud to be installing the FieldTurf Core system at both Ford Field and the Allen Park Practice Facility for the 2023 season and beyond. We believe this is the best field we can install that provides the safest playing surface."

– TODD ARGUST
SENIOR VICE PRESIDENT, FACILITIES
DETROIT LIONS

NEW YORK GIANTS

METLIFE STADIUM

Year: 2023
Product: CORE
Years on FieldTurf: 12 years,
2003-2009 (Giants Stadium)
2020-Present

"Installation of the new FieldTurf CORE system reinforces the commitment we have to providing the best playing surface for our teams. The research that FieldTurf has put into the heavyweight infill design for this new field system will equip MetLife Stadium with one of the premier surfaces in the league."

– RON VANDEVEEN
PRESIDENT & CEO
METLIFE STADIUM

NEW YORK JETS

METLIFE STADIUM

Year: 2023
Product: CORE
Years on FieldTurf: 12 years,
2003-2009 (Meadowlands)
2020-Present

"Installation of the new FieldTurf CORE system reinforces the commitment we have to providing the best playing surface for our teams. The research that FieldTurf has put into the heavyweight infill design for this new field system will equip MetLife Stadium with one of the premier surfaces in the league."

– RON VANDEVEEN
PRESIDENT & CEO
METLIFE STADIUM

NFL PROJECTS STADIUM & PRACTICE

ATLANTA FALCONS

Mercedes-Benz Stadium
Product: CORE
Year: 2024

Flowery Branch Practice Facility
Product: Revolution 360
Year: 2016

CAROLINA PANTHERS

Bank of America Stadium
Product: Vertex CORE
Year: 2024

Indoor Practice Facility
Product: Classic HD
Year: 2019

CINCINNATI BENGALS

Paycor Stadium
Product: CORE
Year: 2024

DETROIT LIONS

Ford Field
Product: CORE
Year: 2023

Allen Park Training Facility
Product: CORE
Year: 2023

GREEN BAY PACKERS

Don Hutson Center
Product: CORE
Year: 2024

NEW ENGLAND PATRIOTS

Gillette Stadium
Product: CORE
Year: 2024

Gillette Practice Facility
Product: Grassmaster
Year: 2023

NEW YORK GIANTS

MetLife Stadium
Product: CORE
Year: 2023

Meadowlands Sports Complex
Product: CORE
Year: 2022

NEW YORK JETS

MetLife Stadium
Product: CORE

Year: 2023

Atlantic Health Jets Training Center
Product: Prestige XT
Year: 2021

PITTSBURGH STEELERS

UPMC Rooney Sports Complex
Product: Vertex CORE
Year: 2021

SEATTLE SEAHAWKS

Lumen Field
Product: CORE
Year: 2024

Virginia Mason Athletic Center
Product: Classic HD
Year: 2019

TAMPA BAY BUCCANEERS

AdventHealth Training Center
Product: Classic HD
Year: 2017

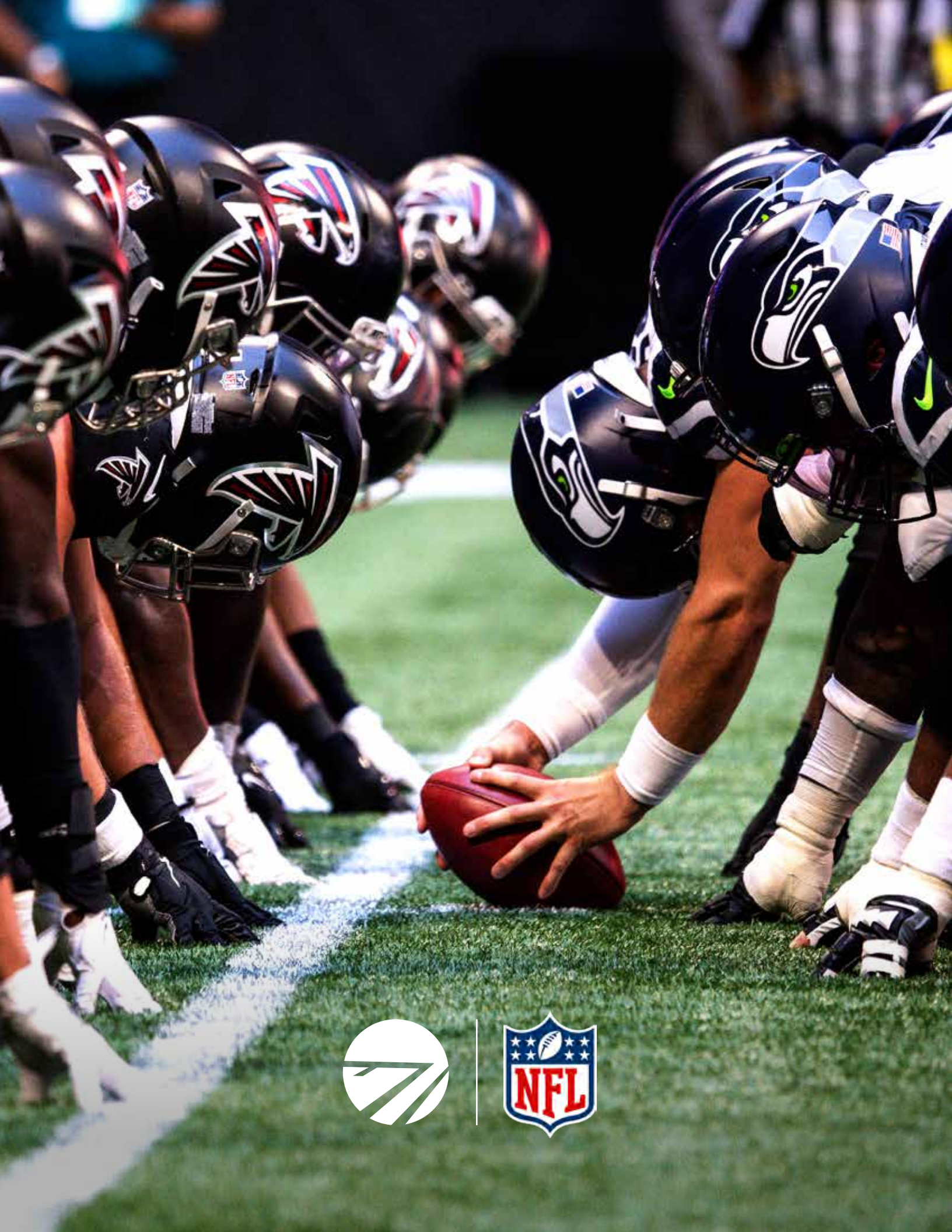

CHANGE THE GAME

THE TARKETT SPORTS FAMILY – LEADERS IN SPORTS SURFACING

FieldTurf® A Tarkett Sports Company | BEYNON® A Tarkett Sports Company | renner® A Tarkett Sports Company | Tarkett SPORTS CONSTRUCTION | Tarkett SPORTS INDOOR | FieldTurf® LANDSCAPE A Tarkett Sports Company | GRASSMASTER By Tarkett Sports

© Copyright 2024. FieldTurf USA, Inc. All Rights Reserved.

FieldTurf® A Tarkett Sports Company

800-724-2969 | info@fieldturf.com | fieldturf.com

Tarkett

Press release

Tarkett Group

Annual results 2024:

Slight organic decline in sales in a persistently difficult market

Growth in adjusted EBITDA and margin

Strong generation of free cash flow and reduction in debt leverage compared with December 2023

Impairment of assets in the CIS and EMEA Wood segments

Results for 2024

- **Revenue for 2024 was slightly down compared to 2023 (-0.9%, or -0.4% at constant scope and exchange rates), reflecting the continuing slowdown in demand for flooring, particularly in EMEA and the CIS.**
- **Revenue in Q4 2024 was stable compared with 2023 (+0.1%, or -0.1% at constant exchange rates and scope of consolidation), with lower activity in Sport offset by favorable volumes in EMEA and North America.**
- **Significant improvement in adjusted EBITDA: €329 million (9.9% of sales), an increase of +€42 million (+1.3 pts) compared to 2023**
- **Adjusted EBIT: €191 million (+€37 million compared to 2023)**
- **Net profit (Group share) of -€62.6 million, due to asset impairments of €111 million (non-cash charges), mainly in the CIS and in the Wood segment in EMEA. Excluding the impact of these impairments, net profit for the period would have been €49.0 million, up from +€20.5 million in 2023.**
- **Free cash flow of €149 million thanks to good operating performance and effective management of working capital requirements.**
- **Net financial debt of €435 million, down by €117 million compared to 2023, resulting in a financial leverage of 1.3x adjusted EBITDA at the end of December 2024.**
- **Selective acquisitions in Sport of Benchmark, PCC (end 2024), and Mid-Atlantic (January 2025), US-based companies specialized in the construction of sports fields and athletics tracks.**
- **In February 2025, Tarkett obtained an A rating from CDP (Carbon Disclosure Project), the highest score, confirming its leadership among flooring and sports surface manufacturers in terms of climate action.**

Paris, 20 February 2025: The Supervisory Board of Tarkett (Euronext Paris: FR0004188670 TKTT), which met today, reviewed the Group's consolidated results for the 2024 financial year.

The Group uses alternative performance indicators (not defined by IFRS) described in detail in Appendix 1 on page 6 this document:

In millions of euros	2024	2023	% change
Revenue *Of which organic growth*	**3 331. 9** *-0.4%*	**3 363.1** *+4.5%*	**-0.9%**
Adjusted EBITDA *% of revenue*	**329.3** *9.9%*	**287.8** *8.6%*	**+14.4%**
Adjusted operating profit (EBIT) *% of revenue*	**190.8** *5.7%*	**154.1** *4.6%*	**+23.8%**
Adjustments to EBIT *Of which impairment of assets*	**(154.6)** *(111.0)*	**(29.0)** **-**	
Operating profit (EBIT) *% of revenue*	**36.2** *1.1%*	**125.1** *3.7%*	**-71.1%**
Net financial expenses	**(62.3)**	**(69.2)**	**-**
Net profit for the period restated for impairment of assets	**49.0**	**20.5**	**-**
Net profit attributable to company shareholders *Diluted earnings per share (€)*	**(62.6)** *-0.95*	**20.4** *+0.31*	**-**
Free cash flow (1)	**149.4**	**147.1**	**-**
Net debt *Leverage (Net debt / Adjusted EBITDA 12 months)*	**434.7** *1.3x*	**551.7** *1.9x*	**-**
Cash and cash equivalents	**352.4**	**224.3**	

(1) Before disposal of distribution assets in California

1. Fourth-quarter revenue by segment

Group **net revenue** amounted to €771.2 million, similar to the fourth quarter of 2023 (+0.1%). On a like-for-like basis, organic sales were slightly down (-0.1%) compared to 2023. Lower sales in Sport during the quarter were offset by higher volumes in EMEA and North America. Over the period, selling prices remained broadly stable.

Revenue in millions of euros	Q4 2024	Q4 2023	Variation	Of which organic variation
EMEA	212.6	197.7	*+7.6%*	*+3.8%*
North America	201.9	202.7	*-0.4%*	*+2.2%*
CIS. APAC & Latin America	136.9	155.0	*-11.7%*	*-2.6%*
Sport	219.8	215.1	*+2.2%*	*-3.9%*
TOTAL	**771.2**	**770.5**	***+0.1%***	***-0.1%***

2. Group results in 2024

Group **net sales** amounted to €3,332 million, down slightly by 0.9% compared to 2023 (-0.4% at constant scope and exchange rates).

Selling prices applied in 2024 are stable overall (-0.3%) compared to 2023, with only selective price reductions implemented for certain products. The decline in sales in the three flooring divisions in the first half of the year was offset in the second half by an increase in activity in EMEA and North America. In a market that remains sluggish, commercial segments (healthcare, education, etc.) are holding up better than residential segments.
The CIS, APAC and LATAM segment saw a decline in sales over the year as a whole, especially in Eastern Europe and mainly in Russia, in a context of economic slowdown, high inflation, and particularly high interest rates.
The Sport division continues to grow in 2024, but at a more moderate pace after two years of record growth

The currency effect was unfavorable over the year (-0.5%), mainly due to the depreciation of the rouble and the Brazilian real.

Revenue in millions of euros	2024	2023	Variation	Of which organic variation
EMEA	866.0	850.2	*+1.9%*	*-1.6%*
North America	866.9	889.2	*-2.5%*	*-0.5%*
CIS. APAC & Latin America	535.8	598.5	*-10.5%*	*-3.2%*
Sport	1 063.2	1 025.2	*+3.7%*	*+2.4%*
Total Group	**3 331.9**	**3 363.1**	***-0.9%***	***-0.4%***

Adjusted EBITDA was €329.3 million, or 9.9% of sales, compared to €287.8 million in 2023, or 8.6% of sales.

The combined effect of volumes and product mix on EBITDA was +€4 million.

Selective adjustments to selling prices (-0.3% compared to 2023) led to an effect of -€8 million euros (excluding changes in selling prices in the CIS, adjusted to offset currency effects).

Lower raw materials costs, mainly in the first half, generated a positive full-year effect of +€43 million, but wage inflation remained significant (-€30 million).

The balance of inflation (net of the effect of sales prices and cost inflation, i.e. purchase prices and salaries) was slightly positive (+€5 million) over the year.

EBITDA and margins benefited from the Group's good industrial performance and productivity initiatives, which led to significant reduction in production costs of €27 million over the year.

SG&A savings generated by the cost-cutting plans implemented during the year in the support functions at headquarters and in EMEA offset efforts to support growth in Sport and the launch of new collections in flooring.

Changes in the scope of consolidation in Sport and North America divisions also had a net positive effect of +€4 million. They include the impact of the asset disposals of the distribution subsidiary Diamond W in California (July 2024) and the acquisition of Classic Turf in Connecticut (July 2024).

The impact of currencies outside the CIS is neutral compared to 2023. In the CIS, the net effect of prices and currencies ("lag effect") is also neutral: the devaluation of the rouble has been offset by price increases.
The adjusted EBITDA margin is up over the year (9.9% of sales compared with 8.6% in 2023).

Adjusted EBITDA in millions of euros	2024	2023	Margin 2024 (%)	Margin 2023 (%)
EMEA	75.3	61.4	*8.7%*	*7.2%*
North America	81.3	71.0	*9.4%*	*8.0%*
CIS. APAC & Latin America	67.3	79.1	*12.6%*	*13.2%*
Sports	134.3	112.5	*12.6%*	*11.0%*
Central	-28.9	-36.2	-	-
TOTAL	**329.3**	**287.8**	***9.9%***	***8.6%***

EBIT amounted to €36.2 million in 2024, down from €88.9 million in 2023. **Adjustments to EBIT** (detailed in Appendix 1) amounted to €154.6 million in 2024, compared to €29.0 million in 2023. They consist mainly of asset impairments and restructuring costs associated with the implementation of cost-cutting plans and the closure of under-performing businesses.

Asset impairments are non-cash accounting charges and amount to €111 million, mainly in the CIS and EMEA Wood cash-generating units (CGUs). In Russia, the deterioration in market conditions observed in 2024 and the revision of medium-term forecasts, combined with a sharp rise in interest rates, led to a partial impairment of the value of assets held in the country. In EMEA, given the sharp slowdown in the wood market, the assets of this CGU have also been written down.

Net financial expense was -€62.3 million in 2024, compared to -€69.2 million in 2023 as a result of the reduction in net debt.
The tax charge was -€35.9 million in 2024, stable compared to the previous year (-€35.4 million).
The net profit (group share) for 2024 was a loss of -€62.6 million. Excluding the impact of asset impairment, net profit for the period would have been a profit of €49.0 million, compared with €20.5 million in 2023**.**

Comments by segment

The EMEA segment recorded revenue of €866 million, up +1.9% compared to 2023, including a favorable currency effect of +0.5% and a scope effect of +3.0% related to the integration of activities in Ukraine, previously part of the CIS. Organic sales were -1.6% lower than in 2023.

The difficult macroeconomic environment and high interest rates have put the brakes on new-build and renovation projects in the eurozone and Northern Europe. Against this backdrop, the flooring market, particularly in the residential sector, is in decline. To support business, selective downward price adjustments have been applied.

Adjusted EBITDA for the segment amounted to €75 million, representing 8.7% of sales, compared to €61 million (7.2% of sales) in 2023. The decline in some selling prices was more than offset by lower raw material purchasing costs than in 2023. In addition, improved industrial productivity and cost-cutting plans more than offset the rise in wages in 2024.

The North America segment posted sales of €867 million, down -2.5% compared to 2023. The currency effect was neutral (-0.1%) and the scope effect negative (-1.9%) with the disposal of our flooring distribution activities in California. Organic sales fell slightly by -0.5% in 2024.

Demand in the commercial segments (offices, healthcare, education) held up well, with volumes up slightly, thanks in particular to carpet tiles and LVT. On the other hand, business volumes in the residential and hospitality sectors were down, in a market where demand continues to be penalized by inflation and high interest rates, leading to a sharp reduction in new-build and renovation projects.

The segment's adjusted EBITDA amounted to €81 million, representing 9.4% of sales, compared to €71 million (8.0% of sales) in 2023. It benefited from good volumes in the commercial business, a positive inflation balance, measures to turn around certain underperforming businesses, and a good level of industrial productivity. The scope effect resulting from the disposal of the distribution subsidiary in California was -€1 million.

Sales in the **CIS, APAC and Latin America** segment amounted to €536 million, down -10.5% compared to 2023. This decrease includes a -3.2% fall in organic sales (excluding the effect of selling prices in CIS countries), a negative currency effect of -3.0% due mainly to the depreciation of the rouble and the Brazilian real, and a -4.3% scope effect linked to the transfer of activities in Ukraine to the EMEA segment.

In Russia, market conditions deteriorated throughout the year, with volumes down -10% compared with 2023. The tightening of international sanctions, inflation and high interest rates are having a significant impact on demand: the market is now around 20% below its 2019 level. Net sales represent approximately 8% of the Group's total revenue for the 2024 financial year (see appendix 3. Key financial indicators for Russia).
In Asia-Pacific, the good momentum in Australia was offset by lower activity in some South-East Asian markets. In Latin America, sales are lower than in 2023, due to a sluggish market, particularly in Brazil, where the economy has been penalized by the devaluation of the currency.
Adjusted EBITDA for the CIS, APAC and Latin America segment is down to €67 million, or 12.6% of sales, compared to €79 million (13.2% of sales) in 2023. The decline in profitability was mainly due to lower volumes and higher raw material costs in the CIS.

Sales in the **Sport** segment rose by +3.7% compared to 2023, including +2.4% organic growth, to reach €1,063 million at the end of 2024, a slower pace after particularly strong growth in the previous two years. Demand for artificial turf fields and athletics tracks in North America remains at a high level, but the market has grown at a more moderate pace.

Adjusted EBITDA for the Sport segment rose to €134 million, or 12.6% of sales, compared to €112 million, or 11.0% of sales, in 2023. This improvement is the result of a positive inflation balance thanks to good selling prices and favorable raw material prices, as well as the impact of the new acquisition in the sports field construction business (scope effect of +€5 million).

3. Balance sheet and cash flow 2024

Working capital stood at €35 million at end-December 2024, compared to €118 million at end-December 2023, an improvement of €83 million over the year. The Group continued its efforts to control inventory levels, which stood at 77 days at end-December 2024, compared with 80 days at end-December 2023.
The Group is continuing its rigorous efforts to plan supplier payment terms effectively. In 2024, working capital requirements improved significantly thanks to the factoring program, which increased by +€30 million to €209 million at the end of December 2024.

Capital expenditure amounted to €96 million in 2024, compared to €92.9 million in 2023.

The Group recorded positive **free cash flow** of €149 million for the year, before disposal of significant assets, marking a slight improvement compared to the €147 million recorded in 2023.

Net debt was €435 million at end-December 2024, compared to €552 million at end-December 2023, a reduction of €117 million. **Debt leverage stood at 1.3x** adjusted EBITDA at end-December 2024, down sharply by -0.6x.

The Group had good **liquidity** of €784 million at the end of 2024, including the undrawn RCF at the end of December 2024 for €350 million, other confirmed and unconfirmed credit lines for €82 million and cash of €352 million.

4. Scope effects

On 26 July 2024, the Group finalized the sale of the assets of its flooring distribution subsidiary in California (Diamond W - annual sales of around €55 million).

On 3 July 2024, the Group completed the acquisition of one of its partners, Classic Turf & Tracks, a sports ground construction company specializing in post-tension concrete technology. This will enable the Group to consolidate its positions in certain states in the north-east of the United States and strengthen its range of tennis courts.
Other selective acquisitions were made in the Sports sector at the end of the second half of 2024 (Benchmark and PCC) and in January 2025 (Mid-Atlantic), specialized in the construction of sports fields and athletics tracks
The Group thus strengthened its position in North America, with these acquisitions adding the equivalent of €150 million in annual sales.

5. Outlook for 2025

The geopolitical and macroeconomic context remains uncertain, and interest rate cuts have not led to a recovery in new construction or renovation.

The European market remains sluggish in the major Eurozone countries (France, Germany, the Nordic countries), with no clear positive outlook for the medium term. The US market is underpinned by a more dynamic economy, and commercial activity has been more resilient. However, the residential market has not yet recovered, and the leading indicators show no signs of recovery in the short term.

In the CIS, the Russian market has slowed for some time, and the Group does not expect the situation to improve in the medium term.

Sport remains the most buoyant segment, driven by a market that continues to grow, albeit at a slower pace than in previous years. The Group intends to grow by reinforcing its geographical coverage in North America, and by continuing to innovate and bring complementary products to the existing portfolio. Priority is being given to integrating recently acquired companies, without excluding other targeted acquisitions.

As in 2024, the group aims to continue its development in a difficult macroeconomic environment and is targeting an Adjusted EBITDA of around 360 million euros for 2025, including the impact of acquisitions made in the Sports sector.

This press release may contain forward-looking statements. These statements represent either trends or objectives and should not be regarded as forecasts of results or any other performance indicator. By its very nature, this information is subject to risks and uncertainties, as described in the Company's Universal Registration Document available on its website (https://www.tarkett-group.com/en/category/urd/). It does not therefore reflect the Company's future performance, which may differ materially. The Company makes no commitment to update this information.

The audit procedures on the consolidated accounts have been completed. The statutory auditors' audit report is in the process of being issued and the consolidated accounts for the 2024 financial year are available on the Tarkett website https://www.tarkett-group.com/en/document/?_categories=financial-documents

Financial calendar

- In view of the launch by Tarkett Participation of a public offer with a view to a squeeze-out of the Company's shares, the announcement of Q1 2025 sales will be brought forward to 17 April 2025 (press release after market close) and the Annual General Meeting initially scheduled for 25 April 2025 will be postponed to a later date.

Investors and Individual Shareholders Contact
investors@tarkett.com

Media Contacts
Brunswick -tarkett@brunswickgroup.com - Tel: +33 (0) 1 53 96 83 83
Hugues Boëton - Tel: +33 (0)6 79 99 27 15 - Benoit Grange - Tel: +33 (0)6 14 45 09 26

About Tarkett
With over 140 years of history, Tarkett is a world leader in innovative and sustainable solutions for flooring and sports surfaces, with sales of €3.3 in 2024. The Group employs almost 12,000 people and has 24 R&D centres, 8 recycling centres and 35 production sites. Tarkett designs and manufactures solutions for hospitals, schools, homes, hotels, offices, shops and sports fields, serving customers in more than 100 countries. To build "The Way to Better Floors", the Group is committed to the circular economy and sustainable development, in line with its Tarkett Human-Conscious Design® approach. Tarkett is listed on the Euronext regulated market (compartment B, ISIN code FR0004188670, mnemonic code: TKTT). www.tarkett-group.com

Appendices

1/ Definition of alternative performance indicators (not defined by IFRS)

- **Organic growth** measures the change in net sales compared with the same period of the previous year, excluding the effect of exchange rates and changes in the scope of consolidation. The currency effect is obtained by applying the previous year's exchange rates to the current year's sales and calculating the difference with the current year's sales. It also includes the effect of price adjustments in CIS countries to offset changes in local currencies against the euro. In 2024, a positive impact of +€9.4 million from selling price adjustments is excluded from organic growth and included in the currency effect.

- **The scope effect** comprises:
  - Sales for the current year by entities not included in the scope of consolidation for the same period in the previous year, up to the anniversary date of their inclusion in the scope of consolidation, and the reduction in sales relating to divested businesses not included in the scope of consolidation for the current year but included in sales for the same period in the previous year, up to the anniversary date of the divestment.

In € million	2024 revenue	2023 revenue	Variation	*Of volume*	*Of which selling price*	*Of which selling prices in CIS*	*Of which exchange rate effect*	*Of which scope effect*
Total Q1 Group	668.2	698.5	-4.3%	*-2.3%*	*-0.3%*	*+0.5%*	*-2.2%*	*+0.0%*
Of which organic variation				*-2.7%*				
Of which sales price variation					*+0.2%*			
Total Q2 Group	890.5	909.8	-2.1%	*-1.7%*	*-0.2%*	*+0.4%*	*-0.7%*	*+0.0%*
Of which organic variation				*-1.8%*				
Of which sales price variation					*+0.2%*			
Total Group S1	**1 558.7**	**1 608.3**	**-3.1%**	***-2.0%***	***-0.2%***	***-0.4%***	***-1.3%***	***+0.0%***
Of which organic variation				*-2.2%*				
Of which sales price variation					*+0.2%*			
Total Q3 Group	1 002.0	984.3	+1.8%	+2.9%	-0.5%	+0.3%	-0.8%	+0.1%
Of which organic variation				*+2.4%*				
Of which sales price variation					*-0.2%*			
Total Q4 Group	771.2	770.5	+0.1%	-0.0%	-0.0%	-0.1%	+0.5%	-0.3%
Of which organic variation				*-0.1%*				
Of which sales price variation					*-0.1%*			
Total Group S2	**1 773.2**	**1 754.8**	**+1.1%**	***+1.6%***	***-0.3%***	***+0.1%***	***-0.2%***	***-0.2%***
Of which organic variation				*+1.3%*				
Of which sales price variation					*-0.1%*			

Total Group	**3 331.9**	**3 363.1**	**-0.9%**	***-0.1%***	***-0.3%***	***+0.3%***	***-0.8%***	***-0.1%***
Of which organic variation				*+0.4%*				
Of which sales price variation					*+0.0%*			

- **Adjusted EBITDA** is operating profit before depreciation and amortization, adjusted for the following income and expenses: restructuring costs designed to enhance the Group's future profitability, gains and losses on significant asset disposals, provisions and reversals of provisions for impairment, costs relating to business combinations and legal restructurings, expenses relating to share-based payments and other one-off items considered non-recurring by nature.

In €million	Adjusted EBITDA 2024	Adjusted EBITDA 2023	Margin 2024 (%)	Margin 2023 (%)
Group total - Q1	39.7	31.8	5.9%	4.6%
Group Total - Q2	108.5	94.2	12.2%	10.4%
Group total - H1	**148.2**	**126.1**	**9.5%**	**7.8%**
Group Total - Q3	121.2	110.9	12.1%	11.3%
Group Total - Q4	59.8	50.7	7.8%	6.6%
Group Total - H2	**181.1**	**161.7**	**10.2%**	**9.2%**
Total Group	**329.3**	**287.8**	**9.9%**	**8.6%**

In € million	of which adjustments						
	2024	Restructuring	Gains/losses on disposal of assets/impairment of value	Business combinations	Share-based compensation	Other	2024 adjusted
Operating profit (EBIT)	**36.2**	**23.4**	**100.7**	3.5	**15.5**	**11.5**	**190.8**
Depreciation and amortisation	247.6	-	-110.0	-	-	-	137.6
Other	1.0	-	-	-	-	-	1.0
EBITDA	**284.7**	**23.4**	**-9.4**	3.5	**15.5**	**11.5**	**329.3**

In € million	of which adjustments						
	2023	Restructuring	Gains/losses on disposal of assets/impairment of value	Business combinations	Share-based compensation	Other	2023 adjusted
Operating profit (EBIT)	**125.1**	**8.4**	**3.2**	-	**9.6**	**7.8**	**154.1**
Depreciation and amortisation	133.2	-	-1.2	-	-	-	132.0
Other	1.7	-	-	-	-	-	1.7
EBITDA	**260.0**	**8.4**	**2.0**	-	**9.6**	**7.8**	**287.8**

- **Free cash flow** is operating cash flow before changes in working capital, plus (minus) the following cash inflows (outflows): changes in working capital, repayment of lease payments, net interest received (paid), net tax received (paid), miscellaneous operating items received (paid), acquisition of property, plant and equipment and intangible assets, and proceeds (losses) on disposals of fixed assets.

Free cash flow (in € million)	2024	2023
Operating cash flow before changes in working capital and lease payments	**304.3**	**259.5**
Repayment of lease payments	-42.7	-39.8
Operating cash flow before changes in working capital. including lease payments	**261.6**	**219.7**
Change in working capital *Of which change in receivables sale programs*	63.8 *17.4*	117.9 *-4.9*
Net interest paid	-37.7	-46.2
Net tax paid	-39.0	-45.0
Miscellaneous operating items paid	-4.2	-7.8
Acquisitions of tangible and intangible fixed assets	-96.0	-92.9
Proceeds from disposal of property plant and equipment	0.9	1.2
Free cash flow	**149.4**	**147.1**

- **Net debt** defined as the sum of interest-bearing borrowings less cash and cash equivalents. Borrowings correspond to any obligation to repay funds received or raised that are subject to repayment and interest. It also includes lease liabilities.

- **The leverage ratio** is the ratio of net financial debt, including leases accounted for under IFRS 16, to adjusted EBITDA over the last 12 months.

In € million	31 December 2024	31 December 2023
Long-term borrowings	632.7	592.6
Short-term borrowings and bank overdrafts	29.0	40.0
Borrowings excluding IFRS 16 (A)	**661.7**	**632.6**
Lease liabilities - long-term	95.9	111.8
Lease liabilities - short-term	29.5	31.6
Leases - IFRS 16 (B)	**125.4**	**143.4**
Gross debt - long-term	728.5	704.4
Gross debt - short-term	58.5	71.6
Gross debt (C) = (A) + (B)	**787.0**	**776.0**
Cash and cash equivalents (D)	**352.4**	**224.3**
Net debt (E) = (C) - (D)	**434.7**	**551.7**
Adjusted EBITDA 12 months (F)	**329.3**	**287.8**
Ratio (E) / (F)	**1.3x**	**1.9x**

2/ Bridges in € million 2024, H2 and Q4

Net sales by segment

Q4 2023	770.5
+/- EMEA	+7.4
+/- North America	+4.5
+/- CIS, APAC & Latin America	-4.0
+/- Sport	-8.4
Q4 2024 Like-for-Like	**770.0**
+/- Foreign currencies	+8.1
+/- Lag effect in CIS (1)	-4.6
+/- Perimeter	-2.3
Q4 2024	**771.2**

(1) *Sales price increases included*

H2 2023	1 754.8
+/- EMEA	+2.8
+/- North America	+6.0
+/- CIS, APAC & Latin America	-8.9
+/- Sport	+23.2
H2 2024 Like-for-Like	**1 777.9**
+/- Foreign currencies	-1.5
+/- Lag effect in CIS(1)	-0.3
+/- Perimeter	-2.8
H2 2024	**1 773.2**

(1) *Sales price increases included*

2023	3 363.1
+/- EMEA	-13.7
+/- North America	-4.0
+/- CIS. APAC & Latin America	-19.1
+/- Sports	+24.6
FY 2024 Like-for-Like	**3 350.9**
+/- Foreign exchange	-2.9
+/- Lag effect in CIS	-13.3
+/- Perimeter	-2.8
2024	**3 331.9**

Adjusted EBITDA by nature

Q4 2023	50.7
+/- Volume / Mix	+0.4
+/- Sales price	-0.3
+/- Raw materials and transport	+3.3
+/- Salary increases	-7.3
+/- Productivity	+4.7
+/- SG&A	+4.7
+/- Non-recurring & other	+3.5
+/- Lag effect in CIS (1)	-3.5
+/- Foreign exchange	+1.4
+/- Perimeter	+2.2
Q4 2024	**59.8**

(1) *Sales price increases included*

H2 2023	161.7
+/- Volume / Mix	+5.2
+/- Sales price	-4.8
+/- Raw materials and transport	+8.0
+/- Salary increases	-14.6
+/- Productivity	+10.6
+/- SG&A	+9.0
+/- Non-recurring & other	+4.6
+/- Lag effect in CIS(1)	-0.7
+/- Foreign currencies	-1.9
+/- Perimeter	+4.1
H2 2024	**181.1**

(1) *Sales price increases included*

2023	287.8
+/- Volume / Mix	+3.5
+/- Sales prices	-8.5
+/- Raw materials and transport	+43.0
+/- Salary increase	-30.0
+/- Productivity	+27.3
+/- SG&A	+0.8
+/- Non-recurring & other	+4.2
+/- Lag effect in CIS	+0.3
+/- Foreign currencies	-3.3
+/- Perimeter	+4.1
2024	**329.3**

- **Adjusted EBITDA 2023 pro-forma of reallocation of IT costs to divisions**

Adjusted EBITDA in € million	2023 pro forma	2023	Margin 2023 pro forma (%)	Margin 2023 (%)
EMEA	61.4	74.5	*7.2%*	*8.8%*
North America	71.0	77.6	*8.0%*	*8.7%*
CIS. APAC & Latin America	79.1	86.7	*13.2%*	*14.5%*
Sports	112.5	114.5	*11.0%*	*11.2%*
Central	-36.2	-65.6	-	-
TOTAL	**287.8**	**287.8**	***8.6%***	***8.6%***

3) Additional information on Russia's key financial indicators at the end of 2024

Financial indicators in € million	Russia	Group	Contribution (%)
Sales figures	**262.9**	**3 331.9**	***7.9%***
Non-current assets	**64.0**	**1 334.5**	***4.8%***

Tarkett

Press release

Tarkett Group

Annual results 2023:

Organic sales growth of +4.5% driven by record turnover in the Sports segment

Increase in adjusted EBITDA value and margin thanks to a very solid performance in Sports and significant recovery in North America

Strong improvement in free cash flow generation and reduction in debt leverage

Results for 2023

- **Revenue for 2023 is stable compared to 2022, i.e., +0.1%, but organic growth reached +4.5% taking into account rising volumes in Sports and the positive effect of the selling price increases implemented in 2022.**
- **Revenue in Q4 2023 down -2.4% compared to 2022 due to unfavourable currency effects, but organic growth of +4.1% driven mainly by strong activity in the Sports segment.**
- **Adjusted EBITDA is up significantly: €288 million (8.6% of sales), an increase of €+53 million (+1.6 margin points) compared to 2022.**
- **Record adjusted EBITDA in Sports and strong improvement in profitability of flooring in North America.**
- **EBIT: €125 million (€+81 million compared to 2022).**
- **Net profit (Group share) of €+20 million in 2023, compared to a loss of €-27 million in 2022**
- **Positive free cash flow of €+147 million thanks to good management of working capital requirements.**
- **Net financial debt at €552 million, down by €103 million compared to 2022, i.e., a financial leverage of 1.9x adjusted EBITDA at the end of 2023 December.**
- **In 2023, Tarkett maintained its A- rating with CDP (Carbon Disclosure Project), confirming its leadership in climate action among flooring and sports surfaces manufacturers.**

Paris, 15 February 2024: The Supervisory Board of Tarkett (Euronext Paris: FR0004188670 TKTT), met today and reviewed the Group's consolidated results for the 2023 financial year.

The Group uses alternative performance indicators (not defined under IFRS), described in detail in Appendix 1 on page 6 of this document:

In millions of euros	2023	2022	Change in %
Revenue *Of which organic change*	**3,363.1** *+4.5%*	**3,358.9** *+8.9%*	**+0.1%**
Adjusted EBITDA *% of revenue*	**287.8** *8.6%*	**234.9** *7.0%*	**+22.5%**
Adjusted EBIT *% of revenue*	**154.1** *4.6%*	**85.8** *2.6%*	**+79.6%**
EBIT *% of revenue*	**125.1** *3.7%*	**44.4** *1.3%*	**+181.8%**
Net profit attributable to shareholders of the company *Fully diluted earnings per share (€)*	**20.4** *+0.31*	**-26.8** *-0.41*	**-**
Free cash flow	**147.1**	**-148.3**	**-**
Net debt *Leverage (Net debt/adjusted EBITDA over 12 months)*	**551.7** *1.9x*	**654.8** *2.8x*	**-**

1. Fourth quarter revenue and adjusted EBITDA by segment

Net revenue of the Group amounted to €770.5 million, down -2.4% compared to the fourth quarter of 2022. Organic growth stood at +4.1% excluding selling price increases in the CIS region. Over this period, volumes rose by +3.2%, supported by the dynamism of the Sports segment and the good performance of activity in CIS, offsetting a decline in activity in EMEA where demand remains low. The Commercial segments in North America grew, but this performance did not offset the weak activity in Residential and, to a lesser extent, Hospitality. Selling prices (+0.9%) were stable compared to the previous year.

Revenue in millions of euros	Q4 2023	Q4 2022	Change	Of which organic growth
EMEA	197.7	204.9	*-3.5%*	*-3.2%*
North America	202.7	221.5	*-8.5%*	*-3.6%*
CIS, APAC & Latin America	155.0	170.7	*-9.2%*	*+9.2%*
Sports	215.1	192.5	*+11.8%*	*+16.4%*
TOTAL	**770.5**	**789.5**	***-2.4%***	***+4.1%***

Group adjusted EBITDA rose sharply to €50.7 million, i.e., 6.6% of sales, compared to €25.1 million in the fourth quarter of 2022, i.e., 3.2% of sales.
The positive impact of volumes and lower material costs were the main contributors to the improvement in adjusted EBITDA over the quarter, offsetting inflation in other purchasing costs and salaries.

Adjusted EBITDA in millions of euros	Q4 2023	Q4 2022	Margin 2023	Margin 2022
TOTAL	**50.7**	**25.1**	***6.6%***	***3.2%***

2. Group results in 2023

Net revenue of the Group amounted to €3,363 million, up slightly by +0.1% compared to 2022. Organic growth reached 4.5% and remains unchanged including selling price increases in the CIS region (selling price adjustments in the CIS countries are historically intended to offset currency movements and are therefore excluded from the organic growth calculation).

The effect of selling price increases mainly implemented during the second half of 2022 is on average +3.9% over 2023 and contributed mainly to the first half of the financial year. Volumes were generally stable over the entire year with contrasting situations depending on activities and geographies. Sports experienced strong growth again (+20.2%), volumes in CIS improved after the sharp fall in 2022 and North American Commercial activity held on track over the financial year in a market that remains complicated. On the other hand, Residential activities in North America and Europe fell sharply as a result of the drop in real estate transactions. The currency effect was unfavourable over the year (-4.5%), mainly due to the depreciation of the rouble and the dollar.

Revenue in millions of euros	2023	2022	Change	Of which organic growth	Organic change incl. CIS price changes [1]
EMEA	850.2	912.3	*-6.8%*	*-5.5%*	*-5.5%*
North America	889.2	923.7	*-3.7%*	*-1.3%*	*-1.3%*
CIS, APAC & Latin America	598.5	652.8	*-8.3%*	*+5.9%*	*+5.4%*
Sports	1,025.2	870.2	*+17.8%*	*+20.2%*	*+20.2%*
Group Total	**3,363.1**	**3,358.9**	***+0.1%***	***+4.5%***	***+4.4%***

Adjusted EBITDA amounted to €287.8 million, i.e., 8.6% of revenue, compared to €234.9 million in 2022, i.e., 7.0% of revenue.

The combined effect of the decrease in volumes and the product mix on EBITDA is €-48 million. This unfavourable mix effect between the divisions reflects the lower variable cost margins in the Sports segment, particularly on installation and civil engineering services for turnkey projects.

Raw material, energy and transport prices began to decline in the second half of the year in particular, with a net positive effect over the year of €+76 million compared to 2022. However, wage inflation remained very significant.

The selling price increases deployed during the 2022 financial year led to a positive effect of +131 million euros in 2023. SG&A is rising (€-29 million) to support the growth of Sports and the launch of new collections in flooring.

Currency effects, excluding CIS, had a negative €-11 million impact compared to 2022, mainly due to the depreciation of the dollar. The net effect of prices and currencies in the CIS countries ("lag effect") amounts to €-25 million due to the significant devaluation of the rouble.

Adjusted EBITDA margin increased over the year (8.6% of sales compared to 7.0% in 2022).

Adjusted EBITDA in millions of euros	2023	2022	Margin 2023	Margin 2022
EMEA	74.5	76.6	*8.8%*	*8.4%*
North America	77.6	44.0	*8.7%*	*4.8%*
CIS, APAC & Latin America	86.7	84.8	*14.5%*	*13.0%*
Sports	114.5	86.5	*11.2%*	*9.9%*
Central	-65.6	-57.0	-	-
TOTAL	**287.8**	**234.9**	***8.6%***	***7.0%***

EBIT amounted to €125.1 million in 2023: a significant increase compared to 2022 (€44.4 million). **EBIT adjustments** (detailed in Appendix 1) amounted to €29.0 million in 2023 compared to €41.4 million in 2022. They mainly consist of restructuring costs linked to the implementation of savings plans and the discontinuing of underperforming activities.

Financial result stood at €-69.2 million in 2023, compared to €-51.3 million in 2022.The increase in the cost of debt is due to the rise in financial interest net of hedging effects. This increase is mainly due to the rise in average gross debt over the first half of the year and higher financing costs.
The tax burden amounted to €35.4 million in 2023, up on the previous year (€18.1 million) due to the increase in taxable income in North America (USA and Canada) with the good performance of Sports and flooring activities.
The net profit (Group share) for the 2023 financial year is a profit of €20.4 million, i.e., a diluted earnings per share of €0.31 up on 2022.

Comments by segment

The EMEA segment achieved a turnover of €850 million, down -6.8% compared to 2022, including an unfavourable exchange effect of -1.3% and negative organic growth of -5.5%. The economic context of high inflation and interest rates is hindering renovation and new construction projects throughout the area. Activity in the Residential segment was significantly lower than in 2022 and the decline in sales is marked by an unfavourable product mix, with vinyl rolls performing better than more expensive categories such as parquet. In a difficult market environment, activity in the Commercial segments is showing only a slight decline compared to 2022 due to steady volumes in the two main activities, vinyl products for the Healthcare and Education sectors and carpets for Workplace.

The segment's adjusted EBITDA amounts to €75 million, i.e. 8.8% of sales, compared to €77 million (8.4% of sales) in 2022. The drop in volumes was offset by a positive inflation balance driven by the positive effect of selling price increases implemented in 2022 over the first half of 2023 and the drop in material prices over the second half.

The North American segment generated a turnover of €889 million, down -3.7% compared to 2022, with a negative exchange effect linked to the depreciation of the dollar against the euro (-2.4%) and a negative organic growth of -1.3%. Commercial segment (Workplace, Healthcare, Education) demand has been slow but the Group has delivered volume growth driven by Accessories and Carpet Tiles. Conversely, volumes in the Residential and Hospitality segments are down in a market where demand is still suffering from inflation and the level of interest rates.

The segment's adjusted EBITDA rose sharply to €78 million, i.e., 8.7% of sales, compared to €44 million (4.8% of sales) in 2022. The improvement is due to the favourable effects of volumes, the product mix, but also a positive inflation balance driven by on-board price increases in the previous year and the inflexion of material costs compared to last year. The segment also benefits from initiatives to turn around certain activities both in terms of sales and industrial efficiency.

Revenue in the **CIS, APAC and Latin America segment** amounted to €599 million, down -8.3% with a very unfavourable exchange effect mainly resulting from the depreciation of the rouble (-27% compared to 2022). Activity was well positioned with organic growth of +5.9% (excluding selling price effects in CIS countries). It benefits from the improvement in volumes in Russia and Ukraine compared to 2022, which had been marked by a significant decline compared to 2021. These countries represent 8% and 0.7% respectively of the Group's sales over the year. Vinyl rolls and LVT tiles for the Residential market were the drivers of the business, accompanied by reactive price management to secure volumes. In Asia, activity was down, mainly due to a marked drop in sales in China. In order to optimise its cost base, the Group closed the commercial carpet production site located in Suzhou (China). Latin America is stable compared to 2022 with a slight drop in volumes offset by price increases.

Adjusted EBITDA for the CIS, APAC, Latin America segment is slightly improving: €87 million, i.e., 14.5% of sales, compared to €85 million (13.0% of sales) in 2022. The increase in margin comes from lower material purchase prices and improved plant productivity.

Revenue in the **Sports segment** stood at a record level of €1,025 million, a very strong increase of +17.8% compared to 2022, including +20.2% organic growth. The market continues to be very dynamic, particularly for synthetic turf sports fields and athletics tracks in North America. The segment also benefited from price increases which more than offset inflation in raw material costs.

As a result of this very sustained activity, the Sports segment posts a clear increase in adjusted EBITDA: €114.5 million, i.e., 11.2% of sales compared to €86.5 million (9.9% of sales) in 2022.

3. Balance Sheet and Cash Flow 2023

Working capital requirements stood at €118 million at the end of December 2023 compared to €233 million at the end of December 2022, an improvement of €115 million over the financial year. The Group has implemented significant actions to reduce the volume of inventories, which represent 80 days at the end of December 2023, compared to 86 days at the end of December 2022. These actions, in addition to the fall in the purchase price of raw materials, reduced the value of inventories by -€85 million to €453 million at the end of December 2023. Increased payment terms granted by major suppliers have also contributed to lower working capital requirements. Factoring programmes represented a net financing of €161 million at the end of December 2023, a slight decrease compared to the end of December 2022 (€166 million).

Capital expenditure amounted to €92.9 million in 2023 compared to €96.7 million in 2022.

The Group generated a positive **free cash flow** of €147.1 million for the year, a very strong increase compared to 2022 (-148.3 million euros) thanks to the improvement in EBITDA and the significant reduction in working capital requirements.

Net financial debt amounted to €552 million at the end of December 2023, compared to €655 million at the end of December 2022, i.e., a decrease of -103 million euros. The **leverage stood at 1.9x** the adjusted EBITDA at the end of December 2023, i.e., a sharp decrease of -0.9x.

At the end of the 2023 financial year, the Group had a good **level of liquidity** amounting to €656 million comprising the undrawn RCF in an amount of €350 million at the end of December 2023, other confirmed and unconfirmed credit lines in an amount of €82 million and €224 million in cash.

4. Dividends

As the macroeconomic and market environment remain uncertain, and with a view to preserving cash flow in 2024 and consolidating the recovery initiated in 2023, the management board will not propose paying a dividend for the 2023 financial year.

5. 2024 Outlook

In a complex and uncertain geopolitical and macroeconomic environment, Tarkett does not expect market conditions to improve in the short term.

Demand in EMEA is expected to remain low in the coming months given the persistence of high interest rates, the continued low number of real estate transactions and the difficulties in the construction sector. In this area, the Group will continue to adapt its production and cost structure to market conditions.

In North America, the indicators for the Residential market remain dormant, but the Group's limited exposure to this segment and its differentiating positioning on certain distribution channels should allow favourable development in this activity. The Commercial segments have been better oriented in recent months without any clear signs of recovery being identified, particularly given the weakness of office property. Nevertheless, the Group's objective is to continue the momentum initiated in 2023 in order to gain market share and continue to strengthen its profitability.

The Sports segment has experienced exceptional growth over the past two years, which is expected to continue in 2024 but at a less sustained pace. These prospects should enable the further improvement of the results in this segment.

In this complex market environment, Tarkett is maintaining its operational and financial recovery roadmap launched in 2023. After the very strong cash generation in 2023, the Group continues to aim for positive cash generation and deleveraging through rigorous control of working capital requirements and costs, as well as control of investments allocated as a priority to innovative, growth and productivity projects.

This press release may contain forward-looking statements. These statements do not constitute forecasts regarding results or any other performance indicator, but rather trends or targets. These statements are by their nature subject to risks and uncertainties as described in the Company's Registration Document available on its website (https://www.tarkett-group.com/en/category/urd/). They do not reflect the future performance of the Company, which may differ significantly. The Company does not undertake to provide updates to these statements.

Auditing procedures on the consolidated financial statements have been performed. The statutory auditor's report is currently being issued, and consolidated financial statements for 2023 are available on Tarkett's website https://www.tarkett-group.com/en/document/?_categories=financial-documents

Financial calendar

- 25 April 2024: Q1 2024 Revenue - *Press release after close of trading*
- 26 April 2024: Annual General Meeting
- 25 July 2024: Financial results for H1 2024 - *Press release after close of trading*
- 24 October 2024: Q3 2024 Revenue - *Press release after close of trading*

Investor Relations and Individual Shareholders Contact
investors@tarkett.com

Media Contacts
Brunswick – tarkett@brunswickgroup.com – Tel.: +33 (0) 1 53 96 83 83
Hugues Boëton – Tel.: +33 (0) 6 79 99 27 15 – Benoit Grange – Tel.: +33 (0) 6 14 45 09 26

About Tarkett
With a 140-year history, Tarkett is a worldwide leader in innovative and durable flooring and sports surface solutions, generating a turnover of 3.4 billion euros in 2023. The Group has around 12,000 employees and 23 R&D centres, 8 recycling centres and 34 production sites. Tarkett designs and manufactures solutions for hospitals, schools, housing, hotels, offices, shops and sports fields, serving customers in more than 100 countries. To build "The Way to Better Floors", the Group is committed to the circular economy and sustainable development, in line with its Tarkett Human-Conscious Design® approach. Tarkett is listed on the Euronext regulated market (compartment B, ISIN: FR0004188670, ticker: TKTT). www.tarkett-group.com

***

Appendices

1/ Definition of alternative performance indicators (not defined under IFRS)

- **Organic growth** measures the change in revenue compared with the same period in the previous year, excluding the exchange rate effect and changes in scope. The foreign exchange effect is obtained by applying the previous year's exchange rate to sales for the current year and calculating the difference with sales for the current year. It also includes the effect of price adjustments in the CIS countries intended to offset the change in local currencies against the euro. In 2023, a €-3.1 million negative impact of selling price adjustments is excluded from organic growth and included in the foreign exchange effect.

- **The scope effect** is composed of:
  - current year sales by entities not included in the scope of consolidation in the same period of the previous year, until the anniversary of their consolidation, the reduction in sales due to discontinued operations that are not included in the current year's scope of consolidation but were included in sales for the same period of the previous year, until the anniversary of their disposal.

In millions of euros	2023 Turnover	2022 Turnover	Change	*Of which volume*	*Of which selling prices*	*Of which CIS selling prices*	*Of which exchange rate effect*	*Of which scope effect*
Group Total Q1	698.5	684.7	+2.0%	*-7.8%*	*+6.9%*	*+0.4%*	*+2.3%*	*+0.2%*
Of which organic growth				*-0.9%*				
Of which selling price increases					*+7.3%*			
Group Total Q2	909.8	879.3	+3.5%	*+2.4%*	*+5.2%*	*-1.2%*	*-2.9%*	*+0.0%*
Of which organic growth				*+7.5%*				
Of which selling price increases					*+4.0%*			
Group Total H1	**1,608.3**	**1,564.0**	**+2.8%**	***-2.1%***	***+5.9%***	***-0.4%***	***-0.7%***	***+0.1%***
Of which organic growth				*+3.9%*				
Of which selling price increases					*+5.5%*			
Group Total Q3	984.3	1,005.4	-2.1%	+2.8%	+3.1%	-0.2%	-7.8%	+0.0%
Of which organic growth				*+6.0%*				
Of which selling price increases					*+2.9%*			
Group Total Q4	770.5	789.5	-2.4%	+3.2%	+0.9%	+0.8%	-7.6%	+0.2%
Of which organic growth				*+4.1%*				
Of which selling price increases					*+1.7%*			
Group Total H2	**1,754.8**	**1,794.9**	**-2.2%**	***+3.0%***	***+2.1%***	***+0.2%***	***-7.7%***	***+0.1%***
Of which organic growth				*+5.1%*				
Of which selling price increases					*+2.4%*			
Group Total	**3,363.1**	**3,359.9**	**+0.1%**	***+0.6%***	***+3.9%***	***+0.0%***	***-4.4%***	***+0.1%***
Of which organic growth				*+4.5%*				
Of which selling price increases					*+3.9%*			

- **Adjusted EBITDA** is the operating result before depreciation and amortisation restated for the following income and expenses: restructuring costs with the aim of increasing the Group's future profitability, gains and losses on significant asset disposals, provisions and reversals of provisions for impairment, costs related to business combinations and legal reorganizations, expenses related to share-based payments and other one-off expenses considered non-recurring by their nature.

In millions of euros	Adjusted EBITDA 2023	Adjusted EBITDA 2022	Margin 2023	Margin 2022
Group Total – Q1	31.8	37.3	4.6%	5.5%
Group Total – Q2	94.2	88.9	10.4%	10.1%
Group Total – H1	**126.1**	**126.2**	**+7.8%**	**8.1%**
Group Total – Q3	110.9	83.6	11.3%	8.3%
Group Total – Q4	50.7	25.1	6.6%	3.2%
Group Total – H2	**161.7**	**108.7**	**9.2%**	**6.1%**
Group Total	**287.8**	**234.9**	**8.6%**	**7.0%**

In millions of euros	of which adjustments						
	2023	Restructuring	Gains/losses on asset disposals/impairment	Business combinations	Share-based payments	Other	2023 adjusted
EBIT	**125.1**	**8.4**	**3.2**	-	**9.6**	**7.8**	**154.1**
Impairment, amortisation and depreciation	133.2	-	-1.2	-	-	-	132.0
Other	1.7	-	-	-	-	-	1.7
EBITDA	**260.0**	**8.4**	**2.0**	-	**9.6**	**7.8**	**287.8**

In millions of euros	of which adjustments						
	2022	Restructuring	Gains/losses on asset disposals/impairment	Business combinations	Share-based payments	Other	2022 adjusted
EBIT	**44.4**	**18.7**	**7.3**	**0.5**	**6.3**	**8.6**	**85.8**
Impairment, amortisation and depreciation	152.0	-2.2	0.3	-	-	-	150.1
Other	-1.0	-	-	-	-	-	-1.0
EBITDA	**195.4**	**16.5**	**7.7**	**0.5**	**6.3**	**8.6**	**234.9**

- **Free cash flow** is defined as cash generated from operations before change in working capital, plus or minus the following inflows and outflows: change in working capital, repayment of lease liabilities, net interest received (paid), net tax collected (paid), various operating items collected (disbursed), acquisition of intangible assets and property, plant and equipment, and income (loss) from fixed asset disposals.

Free cash flow (in millions of euros)	2023	2022
Cash flow from operations before change in working capital and repayment of lease liabilities	**259.5**	**182.6**
Repayment of lease liabilities	-39.8	-35.1
Cash flow from operations before change in working capital; including repayment of lease liabilities	**219.7**	**147.5**
Change in working capital	117.9	-134.7
of which change in factoring programmes	*-4.9*	*4.2*
Net interest paid	-46.2	-31.2
Net tax paid	-45.0	-24.0
Miscellaneous operating items paid	-7.8	-11.8
Acquisition of intangible assets and property, plant and equipment	-92.9	-96.7
Proceeds from disposal of property, plant and equipment	1.2	2.5
Free cash flow	**147.1**	**-148.3**

- **Net financial debt** is defined as the sum of interest bearing loans and borrowings minus cash and cash equivalents. Borrowings correspond to any obligation to repay funds received or raised that are subject to repayment terms and interest. They also include liabilities on leases.

- **Financial leverage** is the ratio of net financial debt, including leases accounted for as per IFRS 16, to adjusted EBITDA over the last 12 months.

In millions of euros	31 December 2023	31 December 2022
Financial debts - long term	592.6	711.0
Financial debts and bank overdrafts - short term	40.0	45.2
Financial debts excluding IFRS 16 (A)	**632.6**	**756.2**
Lease liabilities - long term	111.8	91.7
Lease liabilities - short term	31.6	27.7
Lease liabilities - IFRS 16 (B)	**143.4**	**119.4**
Gross debt - long term	704.4	802.7
Gross debt - short term	71.6	72.9
Gross debt (C) = (A) + (B)	**776.0**	**875.6**
Cash and cash equivalents (D)	**224.3**	**220.8**
Net debt (E) = (C) - (D)	**551.7**	**654.8**
Adjusted EBITDA 12 months (F)	**287.8**	**234.9**
Ratio (E) / (F)	**1.9x**	**2.8x**

2/ Bridges in millions of euros 2023, H2 and Q4 2023

Net revenue by segment

Q4 2022	789.5
+/- EMEA	-6.6
+/- North America	-8.1
+/-CIS, APAC & Latin America	15.7
+/- Sports	31.6
Q4 2023 Like-for-Like	**822.1**
+/- Currencies	-23.2
+/- "Lag effect" in CIS (1)	-30.1
+/- Scope	-1.8
Q4 2023	**770.5**

(1) *Including selling price increases*

H2 2022	1,794.9
+/- EMEA	-14.9
+/- North America	-14.7
+/-CIS, APAC & Latin America	36.3
+/- Sports	85.7
H2 2023 Like-for-Like	**1,887.3**
+/- Currencies	-60.3
+/- "Lag effect" in CIS(1)	-74.1
+/- Scope	1.8
H2 2023	**1,754.8**

(1) *Including selling price increases*

2022	3,358.9
+/- EMEA	-49.9
+/- North America	-11.6
+/-CIS, APAC & Latin America	38.3
+/- Sports	175.9
FY 2023 Like-for-Like	**3,511.6**
+/- Currencies	-63.5
+/- "Lag effect" in CIS(1)	-88.5
+/- Scope	3.5
2023	**3,363.1**

Adjusted EBITDA by nature

Q4 2022	25.1
+/- Volume / Mix	5.9
+/- Selling prices	6.9
+/- Raw materials and Transport	37.0
+/- Salary increases	-7.8
+/- Productivity	7.6
+/- SG&A	-8.9
+/- Non-recurring and other	-13.5
+/- "Lag effect" in CIS (1)	-1.4
+/- Currencies	-0.4
+/- Scope	0.2
Q4 2023	**50.7**

(1) *Including selling price increases*

H2 2022	108.7
+/- Volume / Mix	-2.7
+/- Selling prices	38.5
+/- Raw materials and Transport	68.5
+/- Salary increases	-16.1
+/- Productivity	15.4
+/- SG&A	-19.1
+/- Non-recurring and other	-17.1
+/- "Lag effect" in CIS(1)	-9.3
+/- Currencies	-4.5
+/- Scope	-0.8
H2 2023	**161.7**

(1) *Including selling price increases*

2022	234.9
+/- Volume / Mix	-47.7
+/- Selling prices	131.4
+/- Raw Materials and Transport	76.2
+/- Salary increases	-32.1
+/- Productivity	19.4
+/- SG&A	-29.3
+/- Non-recurring and other	-26.3
+/- "Lag effect" in CIS	-24.9
+/- Currencies	-11.3
+/- Scope	-2.5
2023	**287.8**

Consolidated financial statements

as of December 31, 2024

Tarkett

This document presents the consolidated financial statements of Tarkett as of December 31, 2024.

The statutory auditors' report appears on the page 60.

This document is a non-binding "free" translation from French in English as no legal value other than an informative one.

Should there be any difference between the French and the English version, only the text in French language shall be deemed authentic and considered as expressing the exact information published by Tarkett.

1 Consolidated Financial Statements as of December 31, 2024

Consolidated income statement

(in millions of euros)	Note	2024	2023
Net Revenue		**3,331.9**	**3,363.1**
Cost of sales		(2,681.9)	(2,631.2)
Gross profit [(1)]		**650.0**	**731.9**
Other operating income		24.1	13.5
Selling and distribution expenses		(357.9)	(362.3)
Research and development		(35.4)	(30.1)
General and administrative expenses		(229.4)	(211.8)
Other operating expenses		(15.2)	(16.1)
Result from operating activities	**(3)**	**36.2**	**125.1**
Financial income		9.7	7.2
Financial expenses		(72.0)	(76.4)
Financial income and expenses	**(7)**	**(62.3)**	**(69.2)**
Share of profit of equity accounted investees (net of income tax)		(0.0)	(0.1)
Profit before income tax		**(26.1)**	**55.8**
Total income tax	(8)	(35.9)	(35.4)
Profit from continuing operations		**(62.0)**	**20.5**
Net profit for the period		**(62.0)**	**20.5**
Attributable to:			
Owners of Tarkett		(62.6)	20.4
Non-controlling interests		0.6	0.1
Net profit for the period		**(62.0)**	**20.5**
Earnings per share:			
Basic earnings per share (in euros)	(9)	(0.95)	0.31
Diluted earnings per share (in euros)	(9)	(0.95)	0.31

(1) These items include asset impairments; see Note 3.1 and Note 5.3.

Consolidated statement of comprehensive income

(in millions of euros)	Note	2024	2023
Net profit for the period		**(62.0)**	**20.5**
Other comprehensive income (OCI)			
Foreign currency translation differences for foreign operations		21.5	(48.2)
Changes in fair value of cash flow hedge instruments	(7)	(14.3)	(19.5)
Income tax		5.1	(0.1)
OCI to be reclassified to profit and loss in subsequent periods		**12.3**	**(67.7)**
Defined benefit plan actuarial gain (losses)	(4)	3.1	(3.3)
Other items of comprehensive income		-	-
Income tax		(0.3)	0.7
OCI not to be reclassified to profit and loss in subsequent periods		**2.8**	**(2.5)**
Other comprehensive income, net of tax		**15.1**	**(70.3)**
Total comprehensive income for the period		**(46.8)**	**(49.9)**
Attributable to:			
Owners of Tarkett		(47.5)	(49.9)
Non-controlling interests		0.7	0.0
Total comprehensive income for the period		**(46.8)**	**(49.9)**

Consolidated statement of financial position

Assets

(in millions of euros)	Note	Dec. 31, 2024	Dec. 31, 2023
Goodwill	(5)	629.7	664.3
Intangible assets	(5)	51.8	50.7
Property, plant and equipment	(5)	538.3	557.8
Other financial assets	(7)	16.8	25.5
Deferred tax assets	(8)	97.9	92.8
Other intangible assets		0.0	0.0
Total non-current assets		**1,334.5**	**1,391.1**
Inventories	(3)	425.0	453.1
Trade receivables	(3)	225.1	262.9
Other receivables	(3)	147.9	151.9
Cash and cash equivalents	(7)	352.4	224.3
Total current assets		**1,150.4**	**1,092.2**
Total assets		**2,484.9**	**2,483.3**

Equity and liabilities

(in millions of euros)	Note	Dec. 31, 2024	Dec. 31, 2023
Share capital	(9)	327.8	327.8
Share premium and reserves		167.4	167.4
Retained earnings		385.6	347.2
Net profit for the period attributable to equity holders of the parents		(62.6)	20.4
Equity attributable to equity holders of the parent		**818.1**	**862.7**
Non-controlling interests		2.8	2.1
Total equity		**820.9**	**864.7**
Other non-current liabilities		23.3	16.0
Financial liabilities	(7)	728.5	704.5
Other financial liabilities	(7)	0.9	1.5
Deferred tax liabilities	(8)	4.3	0.6
Employee benefits	(4)	83.0	86.8
Provisions and other non-current liabilities	(6)	29.2	28.9
Total non-current liabilities		**869.2**	**838.2**
Trade payables	(3)	388.5	379.4
Other operating liabilities	(3)	287.8	289.9
Financial liabilities and bank overdrafts	(7)	58.4	71.4
Other financial liabilities	(7)	5.8	3.3
Provisions and other current liabilities	(6)	54.2	36.3
Total current liabilities		**794.7**	**780.3**
Total equity and liabilities		**2,484.9**	**2,483.3**

Consolidated statement of cash flows

(in millions of euros)	Note	2024	2023
Cash flows from operating activities			
Profit for the period before income tax		(26.1)	55.8
Adjustments for:			
Depreciation, amortization and impairment		247.5	133.4
(Gain) loss on sale of fixed assets	(3)	(8.4)	1.3
Net finance costs	(7)	62.3	69.2
Change in provisions and other non-cash items		29.2	(0.3)
Share of profit of equity accounted investees (net of tax)		0.0	0.1
Operating cash flow before working capital changes		**304.3**	**259.5**
(Increase) / Decrease in trade receivables		61.6	(1.7)
(Increase) / Decrease in other receivables		(6.8)	(4.1)
(Increase) / Decrease in inventories		20.8	65.6
Increase / (Decrease) in trade payables		(14.1)	49.7
Increase / (Decrease) in other payables		2.2	8.4
Changes in working capital		**63.8**	**117.9**
Net interest paid		(37.7)	(46.2)
Net income taxes paid		(39.0)	(45.0)
Other operating items		(4.2)	(7.8)
Net cash flows from operating activities		**287.2**	**278.5**
Cash flows from investing activities			
Acquisition of subsidiaries net of cash acquired	(2)	(50.6)	(3.2)
Acquisitions of intangible assets and property, plant and equipment	(5)	(96.0)	(92.9)
Proceeds from sale of property, plant and equipment	(5)	21.3	1.2
Effect of changes in the scope of consolidation		(0.0)	0.0
Net cash flows from investing activities		**(125.4)**	**(94.9)**
Cash flows from financing activities			
Capital increase		-	-
Acquisition of NCI without a change in control		-	-
Proceeds from loans and borrowings		130.7	55.6
Repayment of loans and borrowings		(116.3)	(170.2)
Repayment of lease liabilities		(42.7)	(39.8)
Acquisitions/disposals of treasury shares		(0.0)	(0.0)
Dividends	(9)	(0.0)	(0.0)
Net cash flows from financing activities		**(28.3)**	**(154.3)**
Net increase / (decrease) in cash and cash equivalents		**133.6**	**29.3**
Cash and cash equivalents, beginning of period		224.3	220.8
Effect of exchange rate fluctuations on cash held		(5.6)	(25.8)
Cash and cash equivalents, end of period	**(7)**	**352.4**	**224.3**

Consolidated statement of changes in equity

(in millions of euros)	Share Capital	Share premium and reserves	Translation reserves	Reserves	Equity attributable to equity holders of the parent	Non-controlling interests	Total equity
As of January 1, 2023	**327.8**	**167.4**	**(12.0)**	**428.4**	**911.6**	**1.4**	**913.0**
Capital increase	-	-	-	-	-	-	-
Share premium	-	-	-	-	-	-	-
Net profit for the period	-	-	-	20.4	20.4	0.1	20.5
Other comprehensive income, net of tax	-	-	(48.2)	(22.1)	(70.3)	(0.1)	(70.3)
Total comprehensive income for the period	**-**	**-**	**(48.2)**	**(1.7)**	**(49.8)**	**0.0**	**(49.9)**
Dividends	-	-	-	-	-	-	-
Own shares (acquired) / sold	-	-	-	(3.1)	(3.1)	-	(3.1)
Share-based payments	-	-	-	4.3	4.3	-	4.3
Acquisition of NCI without a change in control	-	-	-	0.0	0.0	0.6	0.6
Other	-	-	-	(0.2)	(0.2)	-	(0.2)
Total transactions with shareholders	**-**	**-**	**-**	**1.0**	**1.0**	**0.6**	**1.6**
As of December 31, 2023	**327.8**	**167.4**	**(60.1)**	**427.7**	**862.7**	**2.0**	**864.7**
As of January 1, 2024	**327.8**	**167.4**	**(60.1)**	**427.7**	**862.7**	**2.0**	**864.7**
Capital increase	-	-	-	-	-	-	-
Share premium	-	-	-	-	-	-	-
Net profit for the period	-	-	-	(62.6)	(62.6)	0.6	(62.0)
Other comprehensive income, net of tax	-	-	21.4	(6.3)	15.0	0.1	15.1
Total comprehensive income for the period	**-**	**-**	**21.4**	**(68.9)**	**(47.5)**	**0.7**	**(46.8)**
Dividends	-	-	-	-	-	-	-
Own shares (acquired) / sold	-	-	-	-	-	-	-
Share-based payments	-	-	-	2.8	2.8	-	2.8
Acquisition of NCI without a change in control	-	-	-	0.0	0.0	-	0.0
Other (1)	-	-	-	0.1	0.1	-	0.1
Total transactions with shareholders	**-**	**-**	**-**	**3.0**	**3.0**	**-**	**3.0**
As of December 31, 2024	**327.8**	**167.4**	**(38.8)**	**361.8**	**818.1**	**2.8**	**820.9**

(1) Corresponds to the hyperflation effect for 0.1 m€

2 Notes to the consolidated financial statements

Note 1 >	**Basis of preparation**	**9**
1.1	General information	9
1.2	Significant accounting principles	9
1.3	Significant developments	10
1.4	Accounting for climate risk	11
Note 2 >	**Changes in the scope of consolidation**	**12**
2.1	Consolidation methods	12
2.2	Business combinations	12
2.3	Foreign currency translation	13
2.4	Changes in the scope of consolidation	13
2.5	Joint ventures	14
Note 3 >	**Operating Data**	**15**
3.1	Components of the income statement	15
3.2	Segment information	17
3.3	Other operating income and expenses	19
3.4	Changes in working capital requirement	19
3.5	Free cash-flow	22
Note 4 >	**Employee benefits**	**23**
4.1	Retirement benefits	23
4.2	Personnel costs and compensation of senior management	28
4.3	Share based payment transactions	29
Note 5 >	**Intangible assets and property, plant and equipment**	**30**
5.1	Goodwill	30
5.2	Intangible assets and property, plant and equipment	32
5.3	Impairment	35
5.4	Lease commitments	37
5.5	Impact of exemptions to IFRS 16	37
Note 6 >	**Provisions**	**38**
6.1	Provisions	38
6.2	Contingent liabilities	39
Note 7 >	**Financing and Financial Instruments**	**40**
7.1	Significant accounting principles	40
7.2	Financial income and expenses	41
7.3	Net debt – interest-bearing loans and borrowings	42
7.4	Other financial assets and liabilities	45
7.5	Fair value of financial assets and liabilities	46
7.6	Financial risks and Financial Instruments	47
7.7	Guarantees	52
Note 8 >	**Income tax**	**53**
8.1	Income tax expense	53
8.2	Deferred tax	54
Note 9 >	**Equity and liabilities**	**55**
9.1	Share capital	55
9.2	Earnings per share and dividends	55
Note 10 >	**Related parties**	**56**
10.1	Joint ventures	56
10.2	Principal shareholders	56
10.3	Members of the Management Board and Supervisory Board	56
Note 11 >	**Subsequent events**	**57**
Note 12 >	**Statutory auditor fees**	**57**
Note 13 >	**Principal consolidated entities**	**58**

Note 1 > Basis of preparation

1.1 General information

Tarkett's Consolidated Financial Statements as of and for the year ended December 31, 2023, include the Company and its subsidiaries (the "Group"), as well as its interests in associates and joint ventures.

The Group is a leading global flooring company, providing a large range of flooring and sports surface solutions to business and residential end-users.

The Group completed its initial public offering on November 21, 2013, and is listed on Compartment B (Compartment A until January 31, 2020 and Compartment B since February 1, 2020) of Euronext Paris, ISIN code: FR0004188670 - Ticker Symbol: TKTT.

The Group's registered office is located at 1 Terrasse Bellini - Tour Initiale - 92919 Paris La Défense, France.

The Group's Consolidated Financial Statements as of and for the year ended December 31, 2023, were finalized by the Management Board on February 17, 2025, and reviewed by the Supervisory Board on February 20, 2025. They will be submitted for approval at the general meeting convened to decide in 2025 on the accounts for the 2024 financial year..

The Group's Consolidated Financial Statements are presented in millions of euros, to one decimal place. The sum of the rounded amounts may differ, albeit to an insignificant extent, from the reported total and subtotals in the tables.

1.2 Significant accounting principles

1.2.1 Statement of compliance and applicable standard

The Group's consolidated financial statements as of and for the year ended December 31, 2023 have been prepared in accordance with IFRS (*International Financial Reporting Standards*) as adopted by the European Union as of such date, which are available at https://ec.europa.eu/info/index_en. These standards have been applied consistently for the fiscal years presented.

a) Amendments, new standards, or revisions to existing standards and interpretations applied during the period

The following published standards have been applied by the Group for the fiscal year:

- **Amendment to IAS 1** - Classification of liabilities as current or non-current (including amendments dated 31 October 2022);
- **Amendments to IFRS 16** - Lease liability in a sale and leaseback;
- **Amendments to IAS 7 and IFRS 7** - Supplier Finance Arrangements.

b) Early adoption of new standards or interpretations during the period

- **Amendments to IAS 21** - No interchangeability;
- **Amendments to IFRS 9 and IFRS 7** – Classification and measurement of financial instruments ;
- **IFRS 18** – Presentation and disclosures in the financial statements ;
- **IFRS 19** – Information to be provided by subsidiaries without public disclosure obligation.

c) New standards and interpretations not adopted

None.

1.2.2 Accounting estimates and judgments

The preparation of the Group's consolidated financial statements requires it to make a number of estimates and assumptions that have an effect on the amounts recorded on its balance sheet and income statement.

These estimates and assumptions relate primarily to the following notes:

	Note
Measurement of the fair value of the consideration transferred, NCI and assets acquired and liabilities assumed	2
Provisions for employee benefits	4.1
Impairment testing of assets	5.3
Determination of other provisions (warranties and disputes)	6
Assessment of restricted cash and cash equivalents	7.3
Accounting treatment of Financial Instruments	7.6
Valuation of deferred tax assets	8.2

Management reviews these estimates and assumptions on an ongoing basis, by reference to past experience and information deemed significant given the current environment. Actual results may differ significantly from these estimates.

The Group's consolidated financial statements have been prepared according to the principle of historical costs, with the exception of the following assets and liabilities which are recorded at their fair value: derivative instruments, investments held for transaction purposes, financial assets available for sale, pension plan assets and other elements when necessary. The carrying amount of assets and liabilities subject to fair value hedging has been adjusted in line with the changes in fair value attributable to the hedged risks.

1.3 Significant developments

> **Geopolitical conflict**

The consequences of the war in Ukraine on business in Russia and Ukraine are significant.

In Russia, market conditions continued to deteriorate in 2024 against a backdrop of tightening international sanctions.

Against this backdrop, the Group has revised its medium-term business forecasts downwards, leading to a write-down of the value of the CIS CGU's assets by (95.5) million euros (see note 5.3). To date, sales in Russia represent around 8% of total sales. Russia's fixed assets now represent 4.7% of the Group's total fixed assets, compared with 9.8% previously.

In Ukraine, business recovery remains constrained and sales are expected to decline in 2024. Ukraine accounts for just under 0.7% of the Group's total sales. The production site in the west of the country is still in operation.

> **Asset disposals**

Diamond W, a distributor of flooring products in the US states of California, Arizona and Nevada, sold part of its assets and liabilities in July 2024 for 18.6 million euros.

1.4 Accounting for climate risk

The Tarkett group has committed to a new environmental strategy for 2030. The objectives are as follows:

- To reduce its greenhouse gas (GHG) emissions across its value chain (Scope 1, Scope 2 and Scope 3) by 30% by 2030 compared to 2019. This target is in line with the Paris Agreement to limit the global temperature increase to below 2°C. It was validated by the independent Science Based Target Initiative (SBTi) in December 2022 in the following terms: reduce total GHG emissions from Scope 1 and Scope 2 by 50% compared to 2019 and reduce GHG emissions from its value chain (Scope 3) linked to the production of raw materials and the end-of-life processing of its products by 27.5% compared to 2019;
- triple the proportion of recycled raw materials from 10% (in 2018) to 30% (in 2030).

The Finance Department interacts regularly with the Sustainable Development Department to ensure that the commitments made by the Group are consistent with those reflected in the financial statements. The Group is exposed to physical and transitional risks (regulatory, legal, market, etc.) related to climate change, such as the increasing frequency of severe weather events, the demand for new products with a very low environmental footprint, the introduction of a carbon tax, and the withdrawal from fossil fuels and plastics. The potential consequences of these risks are reviewed and updated every year and mitigation actions are decided and implemented proactively. Physical risks are mostly covered by property and casualty insurance policies and those related to expected regulatory changes have also been reviewed to the best of our knowledge. Tarkett considers that the evaluation of climatic risks is correctly taken into account and in coherence with its commitments in this matter. The integration of these elements did not have a significant impact on the Group's financial statements. In addition, Tarkett has received a "Leadership A" rating from the CDP (Climate Change 2024) and a Platinum score from the CSR assessment platform Ecovadis.

Note 2 > Changes in the scope of consolidation

2.1 Consolidation methods

2.1.1 Full consolidation

A subsidiary is an entity controlled by the Group. The Group controls an entity when it is exposed to, or has the right to, variable returns from its involvement with the entity and has the ability to affect those returns through its power over the entity. The financial statements of subsidiaries are included in the Consolidated Financial Statements from the date that control commences until the date that control ceases.

The accounting policies of subsidiaries have been changed when necessary to align them with the policies adopted by the Group.

Losses applicable to non-controlling interests in a subsidiary are allocated to the non-controlling interests, even if doing so causes the non-controlling interests to have a deficit balance.

2.1.2 Equity method accounting for joint ventures and associates

A joint venture, for purposes of IFRS 11, is an arrangement in which the Group has joint control, whereby the Group has right to the net assets of the arrangement, rather than rights to its assets and obligations for its liabilities. The Group's interests in joint ventures are accounted for using the equity method.

They are recognized initially at cost, which includes transaction costs. Subsequent to initial recognition, the consolidated financial statements include the Group's share of the profit or loss and OCI of equity accounted investees, until the date on which significant influence or joint control ceases.

The accounting policies described hereafter have been applied to all the periods presented in the consolidated financial statements and have been uniformly applied by all Group entities acquired prior to December 31, 2024 (see Note 2.4).

2.2 Business combinations

Business combinations are accounted for using the acquisition method on the acquisition date - i.e. when control is transferred to the Group.

The Group measures *goodwill* at the acquisition date as:

- the fair value of the consideration transferred; plus
- the recognized amount of any non-controlling interests in the acquiree; plus
- if the business combination is achieved in stages, the fair value of the pre-existing equity interest in the acquiree; minus
- the net recognized amount (generally fair value) of the identifiable assets acquired and liabilities assumed.
- when the excess is negative, a bargain purchase gain is recognized immediately in profit or loss.

Transactions costs, other than those associated with the issue of debt or equity securities, that the Group incurs in connection with a business combination are expensed as incurred.

Any contingent consideration payable is measured at fair value at the acquisition date. If the contingent consideration is classified as equity, then it is not remeasured and settlement is accounted for within equity. However, subsequent changes in the fair value of the contingent consideration are recognized in profit or loss.

Acquisition of Non-Controlling Interests (NCI) without a change in control

For each business combination, the Group elects to measure any non-controlling interests in the acquiree either:

- at fair value; or
- at their proportionate share of the acquiree's identifiable net assets, which are generally at fair value.

Changes in the Group's interest in a subsidiary that do not result in a loss of control are accounted for as transactions with owners in their capacity as owners. Adjustments to non-controlling interests are based on a proportionate amount of the net assets of the subsidiary. No adjustments are made to *goodwill* and no gain or loss is recognized in profit or loss.

Share put options granted by the Group

If the Group undertakes to acquire non-controlling shareholders, the latter have the option to transfer their shares to the Group at a fixed term and for a given price, which may be settled in cash. The Group consolidates the entity as though the non-controlling interests had already been acquired. This position leads to recognizing a liability, recorded in "other liabilities," for the present value of the estimated exercise price of the put option, with any subsequent valuation changes being recorded in shareholders' equity.

As of December 31, 2024, all buyback options have been exercised.

2.3 Foreign currency translation

The functional currency of Tarkett and its subsidiaries located in the euro zone is the euro. Group entities operate on an autonomous basis and therefore the functional currency of entities operating outside the euro zone is generally their local currency.

The Group presents its financial statements in euros.

Foreign currency transactions

Transactions in foreign currencies are translated into the respective functional currencies of the Group entities at the foreign exchange rate as of the date of the transaction. Foreign exchange rate differences arising on these transactions are recognized either in the operating profit for operational transactions or in the financial result for financing transactions.

Certain transactions are covered by derivative instrument contracts: the accounting treatment of these transactions is described in note 7.6.

Non-monetary items are not revalued at the balance sheet date and are translated using the historical exchange rates, while monetary items are translated using the foreign exchange rates in effect on the balance sheet date.

Financial statements of foreign operations

On the balance sheet date, assets and liabilities of foreign operations are translated at the closing rate, and income and expenses are translated at the average exchange rate for the period.

Foreign currency differences are recognized in other comprehensive income (OCI) and presented in the translation reserve in equity.

Net investments in foreign operations

When a long-term loan in foreign currency is granted to a subsidiary, it may be deemed a net investment in a foreign company. Foreign exchange gains and losses relating to these long-term loans are then recognized in translation reserves in other comprehensive income.

2.4 Changes in the scope of consolidation

The Tarkett Group's scope of consolidation is as follows (see Note 13, which contains a list of consolidated companies):

Number of companies	Dec. 31, 2023	Mergers	Acquisitions and creations	Liquidations	Dec. 31, 2024
Fully consolidated companies	78	-	4	-	82
Equity-accounted consolidated companies	4	-	-	-	4
Total	**82**	**-**	**4**	**-**	**86**

2.4.1 Transactions completed in 2024

The year's main transactions are as follows:

a) Acquisitions and creations

Tarkett Japan, a 100% subsidiary of Tarkett GDL, was founded in June 2024.

100% acquisition in July 2024 of Classic Turf & Tracks by Fieldturf Tarkett USA Holdings Inc. The company is based in Connecticut and specialises in the construction of post-tensioning concrete substructures for athletic tracks and tennis/basketball/pickleball courts.

100% acquisition in November 2024 of Benchmark contracting by Fieldturf Tarkett USA Holdings Inc.

100% acquisition in December 2024 of Precision Construction and Contracting by Fieldturf Tarkett USA Holdings Inc.

The contracts for the acquisition of Classic Turf & Tracks, Benchmark Contracting and Precision Construction and Contracting include earn-out clauses based on attendance and performance criteria.

b) Mergers

None.

c) Liquidations

Desso Sports Systems AS was liquidated in January 2023.

2.4.2 Transactions completed in 2023

The year's main transactions are as follows:

a) Acquisitions and creations

Creation in November 2022 of M-WALL Holding, 51% owned by Tarkett GDL and 49% by a minority shareholder. This entity proceeded with the joint purchase of all shares in M-Projectservice BV and M-WALL BV in November 2022. These three entities, presented as unconsolidated securities in the Group's financial statements as of 31 December 2022, were included in the scope of consolidation as of 1 January 2023 according to the full consolidation method. The entry of these three entities into the scope of consolidation led the group to recognise goodwill of €1.2 million in the first half of 2023.

b) Mergers

None.

c) Liquidations

Desso Sports Systems AS was liquidated in January 2023.

2.5 Joint ventures

The Group holds interests in the following companies:

- AllSports Constructions & Maintenance, a Scottish company.
- FED Inc., based in the United States.
- Laminate Park GmbH & Co KG, a German company jointly held with the Sonae Arauco Group.
- Virtual Reality Empathy Platform Ltd, a British company.

Note 3 > Operating Data

3.1 Components of the income statement

3.1.1 Net revenue

As from January 1, 2018, IFRS 15, "Revenue from Contracts with Customers," replaces IAS 11, "Construction Contracts," and related interpretations.

The standard includes new rules for recording revenue and segmenting contracts into performance obligations.

In accordance with the standard, revenue from the sale of goods is recognized in profit or loss when the control inherent to service obligations has been transferred to the buyer, payment is likely, the associated costs and potential return of the merchandise can be reliably assessed, the Group is no longer involved in managing the merchandise, and the revenue from the merchandise can be reliably assessed. Revenue is recognized net of returns, rebates, commercial discounts, and bulk discounts.

The Group recognizes revenue using the five-step model set forth in the standard as a function of its two business sectors.

Flooring:

The contracts that the Group enters into relate to the supply of identifiable and distinct products constituting the principal performance obligation. No significant long-term contracts were identified. The Group acts in its own name and not as an intermediary. The general terms and conditions of sale provide for payment in under one year, and the Group does not offer variable financing that would necessitate segmented recording pursuant to IFRS 15. Tarkett does not sell extended warranties on its products; therefore, its warranty is not considered as a separate service and is recorded in accordance with IAS 37, "Provisions, contingent liabilities and contingent assets."

For this business sector, in general, revenue is recorded at the time of delivery of the performance obligation. Taking into consideration the nature of the products and the general terms and conditions of sale, sales are usually recorded on the date on which the products leave the Group's warehouses, or upon delivery if Tarkett is responsible for transport.

Sports Surfaces:

The sports surfaces activity is composed of sales of products directly to distributors and the sale of installation contracts (including provision of the sports surfaces). The direct sale of products to distributors follows the same Group rules for recording revenue as those described for the flooring activity. With respect to installation contracts, the Group does not perform installations without also providing the sports surfaces; it therefore considers the supply of the products and the installation to be part of the same performance obligation. The general terms and conditions of sale do not offer variable financing or specific components of financing. Tarkett does not sell extended warranties on its installations; therefore, its warranty is not considered a separate service and is recorded in accordance with IAS 37, "Provisions, contingent liabilities and contingent assets."

In this business segment, revenue from services rendered or from construction contracts is recognized in profit or loss in proportion to the stage of completion of the transaction at the balance sheet date. Revenue is recorded as the performance obligation are completed. The stage of completion is assessed by reference to surveys of work performed. The use of the percentage-of-completion method requires satisfaction of one of the three prior conditions provided for in IFRS 15 paragraph 35.

Pursuant to that paragraph of the standard, the Group recognizes revenue over time to the extent that it complies with two of the three following conditions referred to in the standard:

- the asset created by the Tarkett Group's performance does not have an alternative use to that provided for in the contract;
- the Group has an enforceable right to payment for performance completed to date.

Net sales comprise revenue from the sale of goods and services net of price reductions and taxes, and after elimination of intragroup sales.

3.1.2 Operating result

a) Grants

Grants relating to assets are deducted from the carrying amount of the property, plant and equipment that they financed. The grants are thus recognized as income over the lives of the assets by way of a reduced depreciation charge.

Grants are recognized when there is reasonable assurance that the Group will comply with the conditions attaching to them and that the grants will be received. Other grants are recognized as income on a systematic basis over the periods necessary to match them with the related costs which they are intended to compensate.

b) Expenses

Cost of sales

Cost of sales comprises the cost of manufactured products, the acquisition cost of purchased goods which have been sold, and the supply chain, logistic and freight costs.

Selling and distribution expenses

Selling and distribution expenses comprise the expenses of the marketing department and the sales force, as well as advertising expenses, distribution expenses, sales commissions and bad debts.

Research and development

Research and development costs are recognized as expenses when incurred, unless the criteria are met for them to be capitalized, as per Note 5.2.1.

General and administrative expenses

General and administrative expenses comprise the remuneration and overhead expenses associated with management and administrative personnel with the exception of amounts charged to other cost centres.

c) Other operating income and expenses

This category includes all operating income and expenses that cannot be directly attributed to business functions, including operating expense related to retirement commitments and costs with respect to certain disputes.

3.1.3 Adjusted EBITDA

Adjusted EBITDA is a key indicator for the Group, because it enables it to measure the performance of its current operations.

It is defined using the result from operating activities before depreciation and amortization and restating income and expenses as follows:

- restructuring costs to improve the future profitability of the Group;
- gains or losses on disposals of significant assets;
- impairment and reversal of impairment based on Group impairment testing only;
- costs related to business combinations and legal reorganizations, including legal fees, transactions costs, advisory fees and other adjustments;
- expenses related to share-based payments due to their non-cash nature; and
- other one-off expenses considered exceptional by their nature.

(in millions of euros)	Dec. 31, 2024	Of which adjustments:					Dec. 31, 2024 adjusted
		Restructuring	Gains/Losses on asset sales/ impairment [1]	Business Combinations	Share-based payments	Other	
Net revenue	**3,331.9**	**-**	**-**	**-**	**-**	**-**	**3,331.9**
Cost of sales	(2,681.9)	10.5	110.0	-	2.5	-	(2,558.8)
Gross profit	**650.0**	**10.5**	**110.0**	**-**	**2.5**	**-**	**773.1**
Selling and distribution expenses	(357.9)	3.0	0.5	-	2.7	-	(351.7)
Research and development	(35.4)	2.0	-	-	0.8	-	(32.6)
General and administrative expenses	(229.4)	7.9	(0.4)	3.5	9.4	11.1	(197.9)
Other operating income and expenses	9.0	-	(9.4)	-	-	0.3	(0.1)
Result from operating activities (EBIT)	**36.2**	**23.4**	**100.6**	**3.5**	**15.5**	**11.5**	**190.8**
Depreciation and amortization	247.6	-	(110.0)	-	-	-	137.6
Other	1.0	-	-	-	-	-	1.0
EBITDA	**284.7**	**23.4**	**(9.4)**	**3.5**	**15.5**	**11.5**	**329.3**

[1] *These items include asset impairments, see Note 5.3.*

(in millions of euros)	Dec. 31, 2023	Of which adjustments					Dec. 31, 2023 adjusted
		Restructuring	Gains/Losses on asset sales/ impairment	Business Combinations	Share-based payments	Other	
Net revenue	**3,363.1**	**-**	**-**	**-**	**-**	**-**	**3,363.1**
Cost of sales	(2,631.2)	4.4	1.2	-	-	-	(2,625.6)
Gross profit	**731.9**	**4.4**	**1.2**	**-**	**-**	**-**	**737.5**
Selling and distribution expenses	(362.3)	2.3	0.5	-	-	-	(359.5)
Research and development	(30.1)	0.3	-	-	-	-	(29.8)
General and administrative expenses	(211.8)	1.5	-	0.0	9.5	6.5	(194.3)
Other operating income and expenses	(2.6)	-	1.5	-	-	1.3	0.2
Result from operating activities (EBIT)	**125.1**	**8.4**	**3.2**	**0.0**	**9.5**	**7.8**	**154.1**
Depreciation and amortization	133.2	-	(1.2)	-	-	-	132.0
Other	1.7	-	-	-	-	-	1.7
EBITDA	**260.0**	**8.4**	**2.0**	**0.0**	**9.5**	**7.8**	**287.8**

3.2 Segment information

In accordance with IFRS 8, "Operating Segments," the Group's activities have been segmented based on the organization of its internal management structure and of its products.

As in 2023, the Group is organized in four segments:

- Europe, Middle East and Africa ("**EMEA**");
- North America;
- Commonwealth of Independent States ("**CIS**"), Asia Pacific ("**APAC**") and Latin America; and
- Sports surfaces.

Certain expenses are not allocated, including the expenses of headquarters and of the R&D Group.

Reminder on the organization of the CIS and Asia Pacific (APAC)/Latin America divisions

Reporting reviewed by the chief operating decision maker is organized by division, of which there are currently six: EMEA, North America, CIS, APAC, Latin America, and Sports Sufaces.

The CIS and APAC/Latin America Divisions have been combined to form the "CIS, APAC and Latin America" segment, for the following reasons:

- The markets of the divisions had similar economic characteristics (similar growth trends in the relevant markets).
- The products sold, manufacturing methods, types of clients, and distribution modes of the zones are similar.

In addition, the relatively small contribution of revenue and operating income from Asia-Pacific/Latin America (less than 10% of the Group's net revenue and adjusted EBITDA) highlighted that there was no need to present the division in a separate segment.

By operating segment

IT costs have been reallocated by division from 2024 for better readability of the indicators. The segment information for 2023 is presented pro forma with a re-allocation of expenses of €14.8 million between central costs and the other divisions.

The Ukraine business joined the EMEA division in January 2024 (CIS until 2023).

Dec. 31, 2024	Flooring			Sports Surfaces	Central	Group
(in millions of euros)	EMEA	North America	CIS, APAC and Latin America			
Net revenue	**866.0**	**866.9**	**535.8**	**1,063.2**	**-**	**3,331.9**
Gross profit	**200.2**	**219.5**	**59.8**	**215.1**	**(44.6)**	**650.0**
% of net revenue	23.1%	25.3%	11.2%	20.2%		19.5%
Adjusted EBITDA	**75.3**	**81.3**	**67.3**	**134.3**	**(28.9)**	**329.3**
% of net revenue	8.7%	9.4%	12.6%	12.6%		9.9%
Of which adjustments	**(23.3)**	**(1.1)**	**(0.8)**	**(16.1)**	**(3.3)**	**(44.5)**
EBITDA	**52.1**	**80.2**	**66.5**	**118.2**	**(32.3)**	**284.7**
% of net revenue	6.0%	9.3%	12.4%	11.1%		8.5%
Result from operating activities (EBIT)	**(31.4)**	**5.8**	**(20.6)**	**85.9**	**(3.4)**	**36.2**
% of net revenue	-3.6%	0.7%	-3.8%	8.1%		1.1%
Ongoing capital expenditures	**39.7**	**16.6**	**19.4**	**18.6**	**1.8**	**96.0**

Dec. 31, 2023	Flooring			Sports Surfaces	Central	Group
(in millions of euros)	EMEA	North America	CIS, APAC and Latin America			
Net revenue	**850.2**	**889.2**	**598.5**	**1,025.2**	**-**	**3,363.1**
Gross profit	**204.5**	**211.7**	**124.8**	**191.4**	**(0.4)**	**731.9**
% of net revenue	24.1%	23.8%	20.8%	18.7%		21.8%
Adjusted EBITDA	**61.4**	**71.0**	**79.1**	**112.5**	**(36.2)**	**287.8**
% of net revenue	7.2%	8.0%	13.2%	11.0%		8.6%
Of which adjustments	**(9.1)**	**(0.2)**	**(4.2)**	**(2.5)**	**(11.8)**	**(27.8)**
EBITDA	**52.3**	**70.8**	**74.9**	**110.0**	**(48.0)**	**260.0**
% of net revenue	6.2%	8.0%	12.5%	10.7%		7.7%
Result from operating activities (EBIT)	**(34.0)**	**(1.3)**	**29.0**	**78.9**	**52.5**	**125.1**
% of net revenue	-4.0%	-0.1%	4.8%	7.7%		3.7%
Ongoing capital expenditures	**34.7**	**16.3**	**16.3**	**23.2**	**2.5**	**92.9**

Information on activity in France and in other significant countries

The Group's activity in France represented 10% of the Group's revenue in 2024, as in 2023.

Non-current assets in France, excluding the non-affected *goodwill* arising out of the merger between Tarkett and Sommer in the early 2000's, also represent less than 10% of the Group's total non-current assets in 2024 and in 2023.

Tarkett considers the threshold of 25% of revenues to be significant. Only the United States is above that threshold, with 51% of the Group's consolidated revenue in 2024 (51% in 2023).

The United States represents 48% of the Group's total non-current assets as of December 31, 2024 (47% as of December 31, 2023).

No single customer represents more than 10% of the Group's revenues. In 2024, the largest customer represented 2% of consolidated revenues (3% in 2023).

By product category

	Dec. 31, 2024		Dec. 31, 2023	
(in millions of euros)	**Revenue**	**%**	**Revenue**	**%**
Vinyl & Linoleum	1,337.4	40.1%	1,419.2	42.2%
Commercial carpet	522.4	15.7%	504.5	15.0%
Parquet & Laminate	132.9	4.0%	134.5	4.0%
Rubber & Accessories	276.0	8.3%	279.1	8.3%
Sport	1,063.2	31.9%	1,025.2	30.5%
Total	**3,331.9**	**100%**	**3,363.1**	**100%**

3.3 Other operating income and expenses

(in millions of euros)	**Dec. 31, 2024**	**Dec. 31, 2023**
Gains on disposal of fixed assets	8.4	-
Other operating income	15.7	13.5
Other operating income	**24.2**	**13.5**
Losses on disposal of fixed assets	-	(1.3)
Other operating expenses	(15.2)	(14.8)
Other operating expenses	**(15.2)**	**(16.1)**
Total other operating income and expenses	**9.0**	**(2.6)**

3.4 Changes in working capital requirement

3.4.1 Inventories

Inventories are stated on a FIFO (first in, first out) basis, at the lower of manufacturing/acquisition costs and net realizable value. Manufacturing costs of self-produced inventories comprise all costs that are directly attributable and a systematic allocation of production overhead and depreciation of production facilities based on normal operating capacity. Net realizable value is the estimated selling price in the ordinary course of business, less the estimated costs of completion and selling expenses.

(in millions of euros)	**Dec. 31, 2024**	**Dec. 31, 2023**
Raw materials and supplies	137.9	151.4
Work in progress	74.6	68.6
Finished goods	246.6	277.8
Samples	2.0	2.2
Displays	0.1	-
Consumables and spare parts	34.9	33.6
Total gross Value	**496.2**	**533.6**
Provision for inventory depreciation	(71.2)	(80.5)
Total net inventory	**425.0**	**453.1**

Detail of the provision for inventory depreciation

(in millions of euros)	Dec. 31, 2023	Allowance	Decrease	Foreign exchange gain & loss	Other	Dec. 31, 2024
Raw materials and supplies	(20.1)	(7.9)	9.0	(0.3)	0.0	(19.2)
Work in progress	(13.4)	(2.9)	6.9	(0.2)	0.0	(9.6)
Finished goods	(37.6)	(8.8)	12.7	(0.6)	1.6	(32.7)
Samples	(0.4)	(0.1)	0.1	0.0	0.3	(0.0)
Consumables and spare parts	(9.0)	(2.0)	1.3	0.1	(0.0)	(9.6)
Total provision for inventory depreciation	**(80.5)**	**(21.7)**	**30.0**	**(1.0)**	**2.0**	**(71.2)**

The rate of inventory provisions is applied in a similar way for the different periods.

The cost of raw materials amounted to €1,234 million in 2024 (compared to €1,357 million in 2023).

3.4.2 Trade receivables

Trade receivables are stated at their invoiced nominal value converted at the closing rate, less any allowance for doubtful accounts.

The Group conducts a review of each of its customer receivables individually, taking into account the probability of default by the counterparty as well as the extent to which the receivables were hedged, and uses the simplified method provided for by IFRS 9 to provision the expected losses over the remaining maturity of the receivables.

Assignment of trade receivables

Certain of the Tarkett Group's subsidiaries have transferred trade receivables to specialized credit institutions without recourse, transferring nearly all of the risks and benefits attached to the transferred receivables.

Receivables transferred and having payment dates later than December 31, 2024, totalled €209.3 million and are no longer recorded on the Group's balance sheet. Receivables transferred as of December 31, 2023, totalled €179.2 million.

Provision for doubtful receivables

Where trade receivables are not covered by credit insurance, provisions to cover the risk of failing to collect trade receivables either in full or in part are recorded using the expected loss method (see Note 7.1).

Doubtful receivables are identified and provisioned as follows:

- a statistical provision, based on the age of the outstanding receivables, is defined as follows:

Receivables, trade overdue *(percentage of gross amount)*	**Impairment excluding Sport Division**	**Impairment for Sport Division**
From 61 to 180 days	25%	0%
From 181 to 270 days	50%	0%
From 271 to 360 days	75%	0%
From 361 to 540 days	100%	40%
From 541 to 720 days	100%	75%
More than 720 days	100%	100%

- an additional provision on a case-by-case basis based on an application of professional judgement

(in millions of euros)	Dec. 31, 2024	Dec. 31, 2023
Trade receivables	246.9	291.6
Total gross value	**246.9**	**291.6**
Provisions for doubtful receivables	(21.8)	(28.6)
Total net receivables	**225.1**	**262.9**

The change in the provision for doubtful receivables amounts to €6.8 million and is mainly explained as follows:

- €(4.6) million of allowance;
- €11.6 million of reversals;
- €(0.2) million of foreign exchange effects.

Breakdown of unimpaired overdue receivables

(in millions of euros)	Dec. 31, 2024	Dec. 31, 2023
Receivables, trade overdue 0-180 days	51.0	57.8
Receivables, trade overdue 181-270 days	0.2	0.4
Receivables, trade overdue 271-360 days	0.3	0.4
Receivables, trade overdue > 360 days	0.4	0.9
Receivables, bankruptcy procedure/legal cases	0.7	0.4
Total unimpaired overdue Receivables	**52.7**	**59.8**

3.4.3 Other receivables

(in millions of euros)	Dec. 31, 2024	Dec. 31, 2023
Other receivables non-current	**0.0**	**0.0**
Prepaid expenses current	23.4	28.7
Income tax receivable current	40.4	39.2
VAT and other taxes	27.4	25.7
Other accounts receivable and other assets current	56.8	58.4
Other receivables current	**147.9**	**151.9**

3.4.4 Trade payables

Payables due more than a year in the future are discounted to net present value. Payables due more than a year in the future, including €9.9 million in deferred income are discounted to net present value.

(in millions of euros)	Dec. 31, 2024	Dec. 31, 2023
Trade payables	388.5	379.4
Trade notes payable	0.0	0.0
Trade payables	**388.5**	**379.4**

3.4.5 Other liabilities

(in millions of euros)	Dec. 31, 2024	Dec. 31, 2023
Liabilities related to employees	128.6	119.5
Current tax	36.5	43.5
VAT and other taxes	26.9	21.4
Sales rebates	35.2	36.1
Other liabilities	60.7	69.5
Other current liabilities	**287.8**	**289.9**

3.5 Free cash-flow

This indicator corresponds to the liquidity generated by operating activities after deduction of investments made, excluding acquisitions of subsidiaries and other changes in the scope of consolidation.

Free cash-flow is defined based on the items presented in the consolidated cash flow statement, and consists of the following items:

- operating cash flow before working capital changes;
- changes in working capital requirement
- net interest paid;
- net income taxes paid;
- miscellaneous operational items paid;
- acquisitions of intangible assets and property, plant and equipment;
- proceeds from sales of property, plant and equipment;
- repayment of lease liabilities.

Free cash-flow

(in millions of euros)	**2024**	**2023**
Operating cash flow before working capital changes (A)	304.3	259.5
Repayment of principal (lease payments) (B)	(42.7)	(39.8)
Total (A+B)	**261.6**	**219.7**
Changes in working capital requirement [1]	63.8	117.9
Net interest paid	(37.7)	(46.2)
Net income taxes paid	(39.0)	(45.0)
Miscellaneous operating items paid	(4.2)	(7.8)
Acquisitions of intangible assets and property, plant and equipment	(96.0)	(92.9)
Proceeds from sale of property, plant and equipment [2]	21.3	1.2
Free cash flow	**169.8**	**147.1**

[1] including changes in receivables assigned in connection with the non-recourse assignment of receivables program, which total €17.4 million in 2024. For 2023, this amount was €(4.9) million.

[2] The disposal of the assets of the Californian distribution subsidiary Diamond W generated a proceed of €20.4 million . The Group considers this transaction as a business disposal and does not include it in its calculation of the "Free Cash Flow" performance indicator, which therefore stands at €149.4 million.

Note 4 > Employee benefits

4.1 Retirement benefits

Within the Tarkett Group, various systems for providing for retirement benefits depending on the legal, economic and tax environment of each country exist. In accordance with the laws and uses applied in each country, the Group participates in pension, welfare, health and retirement benefit plans whose benefits are dependent on various factors such as length of service, salary and the contributions paid to institutions.

Defined contribution plans

Defined contribution plans are post-employment benefit plans under which the Group pays fixed contributions and will have no legal or constructive obligation to pay further contributions if the fund does not hold sufficient assets to pay all employee benefits relating to employee service in the current and prior periods.

These contributions, based on services rendered by employees, are recognized as an expense in profit or loss as incurred.

Defined benefit plans

Defined benefit plans are post-employment benefit plans under which guarantee future benefits for employees, constituting a future obligation for the Group. The actuarial risk and investment risks are borne by the company. The defined benefit liability is calculated using the projected unit credit method and is discounted to its present value from which the amount of past service cost for the period may also be deduced.

The detailed actuarial calculation requires the use of actuarial hypotheses for demographic variables (mortality, employee turnover) and economic variables (future increases in salaries and medical costs, discount rate).

When defined benefit plans are totally or partially funded by contributions paid to a separate fund or insurance company, those entities' assets are measured at their fair value.

Their amount is then deducted from the obligation to define net liability disclosed in the Group's balance sheet.

The Group's obligation in respect of such arrangements is calculated by independent actuaries, in accordance with revised IAS 19, "Employee Benefits".

Description of plans

As of 31 December 2024, the Group's largest retirement benefit plans are in the United States, Germany, Sweden, Belgium, Canada, France, the United Kingdom, and Russia. These eight countries account for nearly 96.0% of total commitments under the defined benefit plans.

In the United States, Canada, and the United Kingdom, Group pension schemes have been closed to new participants and to the accrual of rights for several years. These plans are pre-financed in accordance with local legislation. In addition, the Group operates medical and life insurance reimbursement schemes for certain employees in the United States. These plans are not covered by financing assets and are now closed.

In Sweden, defined benefit retirement plans are mandatory for employees born prior to 1979 under the applicable collective bargaining agreement. Employees born after that date participate in the mandatory defined contribution plan.

In Germany, the Group offers a pension plan, service awards and early retirement.

In addition, the Group offers end-of-career benefits provided for by legislation or collective agreements applicable in certain countries such as Russia, France and Italy.

The weighted average duration of the obligation is 11.5 years.

Material Events

- France: a social plan has been announced at Tarkett SA targeting 12 employees. This event generated a “curtailment gain” in 2024 expenses of €0.17 million.
- United States: a "buy-out" has been made to an insurer for certain pension plan beneficiaries. A payment of €25.15 million, which was offset by an asset transfer of €25.15 million, was made to the insurer. A loss of €0.35 million is recognised as an expense for the difference between the IAS19 commitment and the insurer's terms and conditions.
- Mexico: recognition of a positive past service cost of €0.01 million following a social plan targeting 49 employees and the correction of the reference salaries for the calculation of seniority bonuses and rights granted by the collective agreement.

Assumptions

The actuarial values recorded are based on long-term interest rates, forecast future salary increases and inflation rates. The main assumptions are presented below:

	Dec. 31, 2024		Dec. 31, 2023	
	Pensions	Other benefit obligations	Pensions	Other benefit obligations
Discount rate	4.50%		4.26%	
Including:				
United States	5.58%	5.20%	4.90%	5.00%
Germany [1]	3.40%		3.20%	
Sweden	3.39%		3.28%	
France	3.60%		3.50%	
United Kingdom	5.50%		4.50%	
Canada	4.80%		4.60%	
Belgium [1]	3.40%		3.21%	
Russia	14.63%		12.56%	
Salary increases	3.31%		3.08%	
Inflation	2.21%		2.24%	

[1] *The rate shown corresponds to the rate applied to more than 98% of the commitment in 2024 and 2023.*

The discount rates are determined with reference to the rates of return on first-grade bonds. They are based on external indices which are commonly used as a reference:

- United States: iBoxx $ Corporate AA 15+;
- Euro zone: iBoxx € Corporate AA 10+;
- Sweden: bonds of Swedish companies;
- United Kingdom: iBoxx £ Corporate AA 15+;
- Canada: Canadian AA "Mercer Yield Curve Canada" bonds;
- Russia: Russian government bonds.

Amounts recognized in the statement of financial position	Dec. 31, 2024			Dec. 31, 2023		
(in millions of euros)	Pensions	Other benefit obligations	Total	Pensions	Other benefit obligations	Total
Defined Benefit Obligations	130.6	1.0	131.6	160.8	1.0	161.8
Fair value on plan assets	(48.6)	-	(48.6)	(75.0)	-	(75.0)
Net liability booked in the statement of financial position	**82.0**	**1.0**	**83.0**	**85.8**	**1.0**	**86.8**

Pension obligations	Dec. 31, 2024			Dec. 31, 2023		
(in millions of euros)	Defined benefit obligations	Fair value of plan assets	Net liabilities recorded in the balance sheet	Defined benefit obligations	Fair value of plan assets	Net liabilities recorded in the balance sheet
As of January 1	**160.8**	**(75.0)**	**85.8**	**166.2**	**(81.7)**	**84.5**
Current service cost	1.9	-	1.9	1.7	-	1.7
Past service cost	(0.2)	-	(0.2)	0.2	-	0.2
(Gain)/loss on new retirement plans	0.4	-	0.4	0.0	-	0.0
Financial cost (effect of discount)	6.4	(3.2)	3.2	7.4	(3.9)	3.5
Update to other post-employment commitments	0.1	-	0.1	-	-	-
Administrative expenses and taxes (expenses paid)	(0.2)	1.2	0.9	(0.2)	1.7	1.5
Expense (income) for the period	**8.3**	**(2.0)**	**6.3**	**9.1**	**(2.2)**	**6.9**
Benefit payments from employer	**(4.9)**	**-**	**(4.9)**	**(5.0)**	**-**	**(5.0)**
Benefits paid by insurers on the basis of the plan	**(6.6)**	**6.6**	**-**	**(6.1)**	**6.1**	**-**
Plan participants' contributions	**0.2**	**(0.2)**	**-**	**0.1**	**(0.1)**	**-**
Employer contributions	**-**	**(2.5)**	**(2.5)**	**-**	**(2.9)**	**(2.9)**
Changes in demographic assumptions	0.1	-	0.1	(0.3)	-	(0.3)
Changes in financial assumptions	(4.0)	-	(4.0)	3.2	-	3.2
Effect of experience adjustments	0.7	-	0.8	0.4	-	0.4
(Return) on plan assets (excluding interest income)	-	0.1	0.1	-	0.4	0.4
Total pension cost/(income) recognized in the OCI	**(3.2)**	**0.1**	**(3.1)**	**3.2**	**0.4**	**3.6**
Transfer [1]	-	1.6	1.6	-	0.3	0.3
Transfers of obligations to insurers	(25.2)	25.2	-	(3.8)	3.8	-
Changes in scope	**-**	**(0.0)**	**(0.0)**	**-**	**-**	**-**
Foreign exchange differences	**1.2**	**(2.4)**	**(1.1)**	**(3.1)**	**1.4**	**(1.7)**
As of December 31	**130.6**	**(48.6)**	**82.0**	**160.8**	**(75.0)**	**85.8**

[1] *Amount corresponding to the financing surplus recorded by Tarkett Ltd, which has been classified under other financial assets.*

Other benefit obligations	Dec. 31, 2024			Dec. 31, 2023		
(in millions of euros)	Defined benefit obligations	Fair value of plan assets	Net liabilities recorded in the balance sheet	Defined benefit obligations	Fair value of plan assets	Net liabilities recorded in the balance sheet
As of January 1	**1.0**	**-**	**1.0**	**1.2**	**-**	**1.2**
Current service cost	-	-	-	-	-	-
Past service cost	-	-	-	-	-	-
(Gain)/loss on new retirement plans	-	-	-	-	-	-
Financial cost (effect of discount)	0.0	-	0.0	0.1	-	0.1
Update to other post-employment commitments	-	-	-	-	-	-
Administrative expenses and taxes (expenses paid)	-	-	-	-	-	-
Expense (income) for the period	**0.0**	**-**	**0.0**	**0.1**	**-**	**0.1**
Benefit payments from plan	**-**	**-**	**-**	**-**	**-**	**-**
Benefit payments from employer	**(0.1)**	**-**	**(0.1)**	**(0.1)**	**-**	**(0.1)**
Plan participants' contributions	**-**	**-**	**-**	**-**	**-**	**-**
Employer contributions	**-**	**-**	**-**	**-**	**-**	**-**
Changes in demographic assumptions	-	-	-	0.0	-	0.0
Changes in financial assumptions	(0.0)	-	(0.0)	0.0	-	0.0
Effect of experience adjustments	(0.1)	-	(0.1)	(0.0)	-	(0.0)
(Return) on plan assets (excluding interest income)	-	-	-	-	-	-
Total pension cost/(income) recognized in the OCI	**(0.1)**	**-**	**(0.1)**	**(0.0)**	**-**	**(0.0)**
Changes in scope	**-**	**-**	**-**	**-**	**-**	**-**
Foreign exchange differences	**0.1**	**-**	**0.1**	**(0.0)**	**-**	**(0.0)**
As of December 31	**1.0**	**-**	**1.0**	**1.0**	**-**	**1.0**

Allocation of plan assets by type of investment

	Dec. 31, 2024	Dec. 31, 2023
Shares	15.2%	15.7%
Bonds	56.5%	65.6%
Insurance contracts	24.8%	17.2%
Cash & cash equivalent (liquidity)	0.0%	0.1%
Real Estate	1.2%	0.7%
Other	2.3%	0.6%

Sensitivity to discount rate assumptions

(in millions of euros)	Dec. 31, 2024	Dec. 31, 2023
Increase of 50 points		
Increase (Decrease) in defined benefit obligations	(6.8)	(8.5)
Decrease of 50 points		
Increase (Decrease) in defined benefit obligations	7.5	9.4

Sensitivity to inflation rate assumptions

(in millions of euros)	Dec. 31, 2024	Dec. 31, 2023
Increase of 50 points		
Increase (Decrease) in defined benefit obligations	4.9	6.7
Decrease of 50 points		
Increase (Decrease) in defined benefit obligations	(4.5)	(5.7)

Benefits to be paid in the next five years

Benefits to be paid in the next five years under retirement and similar plans are estimated as follows:

	Dec. 31, 2024	Dec. 31, 2023
2024	-	11.5
2025	8.8	10.5
2026	8.9	11.0
2027	8.5	10.9
2028	8.7	11.0
2029	10.2	-
TOTAL	**45.2**	**54.9**

4.2 Personnel costs and compensation of senior management

Personnel costs and headcount

(in millions of euros)	**Dec. 31, 2024**	**Dec. 31, 2023**
Wages and salaries	(815.7)	(808.8)
Pension costs	(2.1)	(1.9)
Total Personnel costs	**(817.8)**	**(810.8)**
Employees (average number)	11,635	11,838

Key management personnel compensation

The key management personnel includes the members of the Executive Management Committee and the members of the Supervisory Board.

Key management personnel received the following compensation:

(in millions of euros)	**Dec. 31, 2024**	**Dec. 31, 2023**
Short-term employee benefits	11.8	8.2
Retirement benefits	0.3	-
Other long-term benefits	-	-
Lump-sum retirement payments	1.2	0.0
Share-based payments	0.5	2.5
Total	**13.8**	**10.7**

Compensation of the Group's key management personnel includes salaries, attendance fees and non-cash benefits.

4.3 Share based payment transactions

The Group regularly implements share grant plans and other long-term benefits.

> **Cash grants (IAS 19)**

A new plan with Group criteria was put in place in 2024, which is granted in cash. The allocation of 2022, 2023 and 2024 Group plans is subject to a continued employment condition and three performance conditions (value creation and two CSR criteria).

Three new plans with criteria related to operational divisions were introduced in 2024, which are granted in cash and governed by a continued employment condition and a performance condition (value creation).

Under IAS 19, the Group spreads the cost of the plans over the period of allocation in consideration of a liability so that the amount ultimately recorded corresponds to the amount to be paid to the beneficiaries.

Members of the Management Board are not eligible for participation in these plans.

Group's Plans	**LTIP 2022**	**LTIP 2023**	**LTIP 2024**
Grant date	November 4, 2022	October 20, 2023	September 2, 2024
End of vesting period	July 31, 2025	June 30, 2026	June 30, 2027
Cash amount at grant date *(in millions of euros)*	3.4	3.9	6.6
Form of settlement	Cash settled	Cash settled	Cash settled
2024 expenses *(in millions of euros)*	(2.5)	(3.3)	(0.9)
2023 expenses *(in millions of euros)*	(1.9)	(0.3)	-
2022 expenses *(in millions of euros)*	(0.2)	-	-

Division's Plans	**Plan 2024-1**	**Plan 2024-2**	**Plan 2024-3**
Grant date	August 1, 2024	April 30, 204	January 2, 2024
End of vesting period	December 31, 2027	December 31, 2025	December 31, 2027
Cash amount at grant date *(in millions of euros)*	9.0	24.3	2.3
Form of settlement	Cash settled	Cash settled	Cash settled
2024 expenses *(in millions of euros)*	(1.2)	(4.7)	(1.1)

Note 5 > Intangible assets and property, plant and equipment

5.1 Goodwill

For the measurement of goodwill, Tarkett applies IFRS 3 Revised (see Note 2.2), except for acquisitions accounted for before December 31, 2009, for which IFRS 3 (2004) was applied.

Negative goodwill is immediately recognized in profit.

Goodwill is allocated to cash-generating units and is not amortized, but is subject to impairment testing (see the accounting method described in Note 5.3) annually and whenever an event occurs that could result in an impairment.

Goodwill is assessed at cost, minus cumulative impairments.

As far as associates are concerned, the carrying amount of goodwill is included in the carrying amount of the interest in the associate.

Changes in goodwill

(in millions of euros)	**Dec. 31, 2024**	**Dec. 31, 2023**
Opening carrying amount	664.3	679.2
Goodwill on acquisitions during the period	30.4	1.2
Adjustment to initial purchase price allocation	-	-
Foreign exchange gain & loss	29.2	(15.7)
Impairment	(95.5)	(0.7)
Other	1.3	0.3
Closing carrying amount	**629.7**	**664.3**

The change in the period can be explained mainly by the acquisitions of Classic Turf, Benchmark contracting and Precision construction & contracting, which led to the recognition of goodwill of €23.5 million, €3.8 million and €3.1 million respectively (see note 2.4) and the impact of currency effects on goodwill in U.S. dollars. Impairments of €95.5 million relate to the goodwill of the CIS CGU (see note 5.3).

5.1.1 Allocation of goodwill between the various CGUs

In 2024, the CGUs are identical to 2023. Only Ukraine was reclassified from CIS CGU to EMEA CGU.

Tests were performed on each CGU individually before the mergers or combinations.

Allocation of goodwill between the various CGUs is as follows:

	Dec. 31, 2024		Dec. 31, 2023	
(in millions of euros)	**Gross value**	**Net value**	**Gross value**	**Net value**
Resilient and miscellaneous	73.8	73.2	73.3	72.7
Carpet	33.5	33.5	33.5	33.5
Wood	-	-	-	-
EMEA	**107.3**	**106.7**	**106.8**	**106.2**
Commercial and hospitality	406.3	389.3	382.2	365.1
Residential	-	-	-	-
North America	**406.3**	**389.3**	**382.2**	**365.1**
CIS	96.5	(0.0)	96.5	95.5
APAC	0.0	0.0	(0.0)	(0.0)
Latin America	0.0	0.0	0.0	0.0
CIS, APAC and Latin America	**96.5**	**(0.0)**	**96.5**	**95.5**
Athletic tracks	43.0	36.6	41.0	34.6
Synthetic grass & other	98.1	97.2	63.7	62.9
Sports Surfaces	**141.1**	**133.8**	**104.7**	**97.5**
Total goodwill	**751.2**	**629.7**	**690.3**	**664.3**

5.2 Intangible assets and property, plant and equipment

5.2.1 Intangible assets

Research and development

According to IAS 38, research and development costs are recognized as expenses when incurred, unless the criteria are met for them to be capitalized.

Patents

Patents obtained by the Group are stated at cost less accumulated amortization and impairment losses.

Capitalized costs for internally generated patents principally relate to the costs of legal counsel. Patents capitalized are amortized on a straight-line basis over the shorter of the length of the patent or estimated length of use.

Software licenses

Software licenses are stated at cost less accumulated amortization and impairment losses.

IFRS IC Decision concerning the costs of configuring and customizing software used in Software as a Service (SaaS) mode

An SaaS agreement gives the lessee access to software features hosted by the SaaS supplier through an Internet connection and for a specified term.

This type of agreement generally offers only a right of access to the software for the term of the agreement, and does not grant the lessee control over the software or the right to direct use of the software. As a result, these agreements are not considered intangible assets but rather services.

Configuration and customization costs may be incurred during the implementation phase, prior to the software's entry into service, and the IFRS IC decision specified the accounting treatment of such costs.

Amortization

Amortization of intangible assets is recorded on a straight-line basis from the date of their availability:

> patents and trademarks: the shorter of the length of the patent or its length of use;

> development costs: 3 - $6^{2/3}$ years;

> computer software: 3-5 years.

5.2.2 Property, plant and equipment

Property, plant and equipment are stated at cost less accumulated depreciation and impairment losses.

Acquisition cost

Acquisition cost includes purchase cost or production cost plus the other costs incurred for bringing the items to their operating location and condition. The cost of a self-constructed asset includes the costs of raw materials and direct labor, the initially estimated cost of any obligation for dismantling, removing and restoring the site on which the asset is located, and an appropriate allocation for directly attributable production overhead.

When an item of property, plant and equipment includes material components with different useful lives, each major component is accounted for separately.

Subsequent costs

Costs relating to replacements and improvements are capitalized and recorded as a separate asset if it is probable that the Group will derive economic advantages from the item, while general repairs, day to day servicing and maintenance are charged to expenses as incurred.

Depreciation

Depending on the economic use of the asset, straight-line depreciation is recorded over the following periods:

> Buildings: 20-30 years;

> Equipment and machinery: $6^{2/3}$ - 10 years;

> Printing cylinders: 2 years;

> Other equipment and furnishings: 3-5 years.

IFRS 16: Leases

The Group classifies a contract as a lease within the meaning of IFRS 16 if it gives the lessee the right to control the use of a given asset.

Measured by value, the Group's lease agreements primarily concern real property (offices, plants, and warehouses). In number, they principally concern cars and forklifts.

Among the key assumptions, the discount rate is determined for each asset based on the incremental borrowing rate on the effective date of the contract and corresponds to the interest rate that each entity of the Group would pay to borrow the amount necessary to acquire a similar asset, for a duration and in an economic environment similar to those of the lease, as well as the Group's external financing conditions.

The initial term of the lease corresponds to the period during which it cannot be terminated, plus, where applicable, renewal or termination options that the Group is reasonably certain it will exercise.

With respect to the depreciation of non-removable leasehold improvements, the Group decided to use the shorter of the following periods:

- the useful life of the leasehold improvement, as defined in "IAS 16 - Property, Plant and Equipment"; and
- the lease term of the related leased asset, in light of the legal limit on the use of the asset imposed by the lease agreement.

Improvements associated with leased real property are recorded outside the scope of application of IFRS 16.

> Types of lease agreements

- **Goods and real property**

The Group restates all leased land and buildings, whatever the term of the lease. Land and buildings leased for less than 12 months are thus also restated under IFRS 16 due to their material nature. This method is applied in the same manner throughout the Group for these two categories of assets.

The Group's principal commercial lease is the lease of premises for the Group's registered office, which was renewed in the second half of 2020 for a nine-year term that, under the contractual terms, is the most reasonably certain duration.

- **Materials and equipment" lease agreements**

These agreements primarily include company cars and forklifts used in the Group's plants and warehouses. All company cars with lease terms of greater than 12 months are treated in accordance with IFRS 16.

- **Non-capitalized lease agreements**

  - Short-term leases

Short-term leases have terms of one year or less. The Group's short-term leases consist primarily of short-term car leases.

  - Low-value leases

Low value leases are those for which the value of the asset, if new, would be less than or equal to €5,000 or $5,000. The Group's low value leases consist primarily of leases of small machines and office equipment.

Lease agreements recorded in right to use are depreciated over the terms of the lease in accordance with the method described above.

The net values of intangible and tangible assets can be broken down as follows:

(in millions of euros)	**Dec. 31, 2024**	**Dec. 31, 2023**
Research and development	2.6	2.7
Patents	6.5	6.9
Trademarks	11.2	13.8
Software licenses	4.7	6.6
Other intangible assets	23.2	17.5
Advance payments and fixed assets in progress	3.5	3.3
Intangible assets	**51.8**	**50.7**
Goods and real property	218.0	248.3
of which right to use goods and real property	*87.0*	*106.7*
Technical equipment and machinery	239.6	241.2
of which right to use technical equipment and machinery	*23.9*	*26.0*
Advance payments and fixed assets in progress	80.6	68.3
Property, plant and equipment	**538.3**	**557.8**

The variations in gross value, depreciation and amortization break down as follows:

Acquisition costs *(in millions of euros)*	**Dec. 31, 2023**	**Acquisition**	**Disposal**	**Change in scope**	**Transfer**	**Foreign Exchange differences**	**Dec. 31, 2024**
Research and development	22.5	0.2	(0.0)	-	0.6	0.0	23.4
Patents	145.7	-	(0.1)	-	-	8.8	154.4
Trademarks	58.4	-	-	-	-	1.7	60.1
Software licenses	192.9	0.7	(0.9)	0.0	2.2	4.3	199.3
Other intangible assets	86.6	0.2	(0.4)	8.3	(0.1)	5.0	99.6
Advance payments and fixed assets in progress	3.3	2.2	(0.0)	-	(1.9)	(0.1)	3.5
Intangible assets	**509.4**	**3.3**	**(1.4)**	**8.4**	**0.8**	**19.8**	**540.3**
Goods and real property	702.4	19.5	(25.7)	0.6	6.9	(1.0)	702.7
of which right to use goods and real property	*167.0*	*18.3*	*(23.1)*	*0.4*	*(2.0)*	*3.8*	*164.3*
Technical equipment and machinery	1,614.4	26.8	(39.7)	12.0	57.3	3.1	1,673.8
of which right to use technical equipment and machinery	*51.5*	*14.4*	*(12.5)*	*0.2*	*1.9*	*0.4*	*55.9*
Advance payments and fixed assets in progress	68.3	77.9	(0.4)	0.3	(64.9)	(0.6)	80.6
Property, plant and equipment	**2,385.1**	**124.1**	**(65.8)**	**12.9**	**(0.7)**	**1.5**	**2,457.1**

Cumulative depreciation, amortization, and impairment *(in millions of euros)*	**Dec. 31, 2022**	**Acquisition**	**Disposal**	**Change in scope**	**Transfer**	**Foreign Exchange differences**	**Dec. 31, 2024**
Research and development	(19.8)	(1.1)	0.0	-	0.3	(0.1)	(20.7)
Patents	(138.8)	(0.8)	0.1	-	-	(8.4)	(147.9)
Trademarks	(44.7)	(2.9)	-	-	(0.3)	(1.0)	(48.8)
Software licenses	(186.4)	(4.8)	0.8	(0.0)	(0.0)	(4.3)	(194.7)
Other intangible assets	(69.1)	(3.7)	0.4	-	0.1	(4.0)	(76.4)
Intangible assets	**(458.8)**	**(13.3)**	**1.4**	**(0.0)**	**0.1**	**(17.8)**	**(488.5)**
Goods and real property	(454.1)	(45.9)	11.9	(0.4)	0.9	3.0	(484.7)
of which right to use goods and real property	*(60.2)*	*(24.9)*	*8.8*	*(0.3)*	*0.9*	*(1.6)*	*(77.3)*
Technical equipment and machinery	(1,373.2)	(93.2)	36.3	(1.3)	(1.4)	(1.4)	(1,434.2)
of which right to use technical equipment and machinery	*(25.6)*	*(12.2)*	*6.9*	*(0.1)*	*(0.7)*	*(0.2)*	*(32.0)*
Property, plant and equipment	**(1,827.3)**	**(139.1)**	**48.3**	**(1.8)**	**(0.5)**	**1.6**	**(1,918.8)**

5.3 Impairment

5.3.1 Non-financial assets

Annual impairment testing

Goodwill and other intangible assets with indefinite useful lives are systematically tested for impairment once a year.

The carrying amounts of the Group's assets, other than financial and deferred tax assets and liabilities, are reviewed to determine whether there is any indication of impairment. If any such indication exists, the asset's recoverable amount is estimated.

The recoverable amount of assets is the greater of their fair value less costs of disposal and value in use.

Value in use is calculated by discounting estimated future cash flows for each cash-generating unit, excluding borrowing costs and tax.

Cash generating units

In carrying out impairment testing, assets are tested at the level of cash-generating units ("CGU") that reflect the segment organization of the Group and its products. For this purpose, goodwill was allocated over the cash-generating units.

Impairment process

The Group analyses future cash flows over a period of three years based on the most recent forecasts, corresponding to the best estimate of a full business cycle. The forecasts have been established taking into account variations affecting selling prices, volumes and raw material costs. Beyond four years, the Group determines a standard year calculated by extending the fourth year on the assumption of a stable revenue and margin, a need for working capital and investments determined on normative renewal based on historical observations. This standard year is then projected to infinity according to the Gordon Shapiro method.

Future cash flows are discounted to present value at a weighted average cost of capital (WACC) discount rate that reflects current market assessments of the time value of money and the risks specific to each financing means.

The discount rate is an after-tax rate applied to after-tax cash flows. The following assumptions were used for 2024 :

	Discount rate after tax	Perpetual growth rate
EMEA	10.81%	3.00%
North America	10.51%	3.00%
CIS	22.32%	3.00%
APAC	10.89%	3.00%
Latin America	12.16%	3.00%
Sports Surfaces	10.51%	3.00%

Operating assumptions

For each CGU, operational assumptions that were considered key by the Group are as follows:

- evolution of the markets in which these CGU are involved on the basis of internal estimates, supported if possible by external forecasts on the concerned segments or products;
- evolution of the Group in its various markets;
- general hypothesis of stability of inflation balance (purchase prices stable, or if changes are considered, full offset by changes in selling prices to balance the impact on value);
- continual implementation of productivity plans for factories working on these CGU to Improve profitability; and
- EBITDA, resulting from the combination of factors listed above.

Sensitivity analysis

The sensitivity analysis was carried out on three assumptions:

- the discount rate (WACC);
- the perpetual growth rate; and
- EBITDA.

Variations by 50 basis points in the discount rate and the growth rate are reasonably potential variations for the Group. The Group operates in a large number of countries, with a balance between three main regions (EMEA, North America and CIS/APAC/Latin America). We believe that the economic developments in these regions may offset each other, as has been shown in the past.

In 2024, the combination of an increase in the discount rate by 50 basis points and a decrease in the growth rate by 50 basis points would lead to the recognition of an additional impairment of (€39.0) million on the "Commercial" CGU and of (€3.5) million on the "Residential" CGU of the North America reporting segment, to the recognition of an additional impairment loss of (€4.4) million on the CIS CGU and an additional impairment loss of (€6.8) million on the "Wood" CGU of the EMEA zone.

In addition, a decrease in EBITDA by 100 basis points would lead to the recognition of an additional impairment of (€45.5) million euros on the "Commercial" CGU and of (€11.3) million on the "Residential" CGU of the North America reporting segment, to the recognition of an additional impairment of (€6.4) million on the CIS CGU and to the recognition of an additional impairment of (€10.0) million on the "Wood" CGU of the EMEA zone.

Impairment losses

An impairment loss is recognized whenever the carrying amount of a cash-generating unit exceeds its recoverable amount. Impairment losses are recognized in profit or loss.

Impairment losses recognized in respect of cash-generating units are allocated first to the impairment of *goodwill* and then to other assets.

An impairment loss recorded in respect of *goodwill* cannot be reversed. An impairment recorded for another asset will be reversed if there is a change in the assumptions used to determine the recoverable value.

Impairment

In 2024, impairments recognised are broken down as follows. As a reminder, no impairment loss was recorded in 2023.

(in millions of euros)	**Dec. 31, 2024**	**Dec. 31, 2023**
North America	(4.0)	-
CIS	(95.5)	-
EMEA	(11.5)	-
Total	**(111.0)**	**-**

The depreciation of (€4.0) million on the North America zone relates to the "Residential" CGU.

The assets of the CIS CGU have been written down by (95.5) million euros, which represents all the goodwill of this CGU. This write-down has been recorded in view of the downward revision of medium-term forecasts for Russia, linked to the deterioration in market conditions observed in 2024 against a backdrop of tighter international sanctions (see Note 5.1).

The depreciation of (€11.5) million in EMEA corresponds to the "Wood" CGU, the market of which significantly slowed in 2024 and the medium-term forecasts were revised downwards.

5.3.2 Non-derivative financial assets

A financial asset not carried at fair value through profit or loss is assessed at each balance sheet date to determine whether there is objective evidence that it is impaired.

An impairment loss in respect of a financial asset measured at amortized cost is calculated as the difference between its carrying amount and the present value of the estimated future cash flows discounted at the asset's original effective interest rate.

5.4 Lease commitments

Lease commitments concern contracts that were not restated following the application of IFRS 16, namely, primarily:

- contracts considered to be of low value pursuant to paragraph 5 of IFRS 16;
- service agreements that do not meet the definition of a lease within the meaning of IFRS 16.

Minimum lease payments under operating leases are recorded as expenses on a straight-line basis over the term of the lease.

Future minimum rental commitments under operating leases with initial or remaining non-cancellable terms in excess of one year, are summarized below:

(in millions of euros)	**Dec. 31, 2024**	**Dec. 31, 2023**
Less than 1 year	0.5	0.5
1 to 5 years	0.3	0.4
More than 5 years	-	-
Total future minimum lease payments	**0.7**	**0.8**

5.5 Impact of exemptions to IFRS 16

The Group applies the exemptions provided for under IFRS 16, Leases, keeping rental operating charges where the lease term as of the effective date is less than or equal to 12 months (excluding rented building and land) and rental charges where the value of the underlying asset is less than €5,000 or $5,000.

Such rental charges totalled €(4.5) million and €(0.8) million, respectively, as of December 31, 2024.

(in millions of euros)	**< or equal to 5 K€ / K$**	**< or equal to 12 months**	**Service Agreements**	**Other**	**Total**
Cost of sales	(0.7)	(3.9)	(1.7)	(1.0)	(7.3)
Selling and distribution expenses	(0.1)	(0.4)	(0.8)	0.0	(1.2)
Research and development expenses	-	0.0	(0.0)	(0.0)	(0.0)
General and administrative expenses	(0.1)	(0.2)	(0.7)	(0.1)	(1.1)
Other operating expenses	-	-	-	-	-
Impact on operating profit	**(0.8)**	**(4.5)**	**(3.3)**	**(1.1)**	**(9.7)**

Note 6 > Provisions

6.1 Provisions

Provisions come primarily from legal and tax risks, litigation and other risks.

A provision is recognized when the Group has a present legal or constructive obligation as a result of a past event, and it is probable that an outflow of economic benefits will be required to settle the obligation. If the effect is material, provisions are determined by discounting the expected future cash flows.

The amount recognized as a provision is the best estimate of the expenditure required to settle the present obligation at the balance sheet date. Provisions are reversed when they are no longer required.

A provision for warranties is recognized when the underlying products are sold. The provision is based on historical warranty data. In the event of risks relating to specific products, an additional provision may be recorded.

A provision for restructuring is recorded when the Group has approved a detailed and formal restructuring plan, and the restructuring has been either implemented or publicly announced. Future operating losses are not provisioned.

Change of provisions

(in millions of euros)	Dec. 31, 2023	Allowance	Decrease	Change in scope	Transfer	Foreign exchange gain & loss	Dec. 31, 2024
Product warranty provision	2.9	3.4	(0.0)	0.0	0.0	0.1	6.5
Restructuring provisions	-	-	-	-	-	0.0	-
Claims & litigation provisions	2.3	0.7	(1.4)	-	0.0	(0.1)	1.6
Other provisions	0.3	(0.9)	(0.0)	-	0.9	-	0.3
Provision for additional tax assessments	0.2	0.3	(0.1)	-	0.1	0.0	0.4
Financial provisions [1]	23.2	1.5	(5.6)	-	0.1	1.3	20.5
Total Provisions – long-term	**28.9**	**5.0**	**(7.2)**	**0.0**	**1.1**	**1.4**	**29.2**
Product warranty provision	16.6	6.1	(9.0)	-	2.2	0.9	16.9
Restructuring provisions	1.7	9.8	(3.6)	-	-	0.1	7.9
Claims & litigation provisions	16.6	17.6	(12.6)	-	(2.6)	0.6	19.6
Other provisions	1.4	9.3	(1.2)	-	-	0.3	9.8
Total Provisions – short-term	**36.3**	**42.7**	**(26.4)**	**-**	**(0.4)**	**1.9**	**54.2**
Total Provisions	**65.2**	**47.7**	**(33.5)**	**0.0**	**0.8**	**3.3**	**83.4**

[1] *Variations in provisions for financial liabilities relate to the provision for asbestos litigation recorded by Domco Products Texas Inc.*

(in millions of euros)	Dec. 31, 2022	Allowance	Decrease	Change in scope	Transfer	Foreign exchange gain & loss	Dec. 31, 2023
Product warranty provision	3.6	0.1	(0.7)	-	(0.1)	0.0	2.9
Restructuring provisions	0.4	-	(0.4)	-	(0.0)	(0.0)	0.0
Claims & litigation provisions	1.3	1.8	(0.7)	-	(0.0)	(0.0)	2.3
Other provisions	0.6	0.0	(0.3)	-	-	-	0.3
Provision for additional tax assessments	0.1	0.1	(0.0)	-	-	(0.0)	0.2
Financial provisions [1]	28.2	(1.5)	(2.7)	-	-	(0.9)	23.2
Total Provisions – long-term	**34.2**	**0.5**	**(4.9)**	**-**	**(0.1)**	**(0.9)**	**28.9**
Product warranty provision	12.8	4.7	(2.1)	-	1.7	(0.5)	16.6
Restructuring provisions	2.5	1.9	(2.6)	-	(0.1)	(0.1)	1.7
Claims & litigation provisions	14.7	15.8	(12.2)	-	(1.3)	(0.3)	16.6
Other provisions	3.1	0.5	(2.2)	-	-	(0.0)	1.4
Total Provisions – short-term	**33.1**	**22.9**	**(19.2)**	**-**	**0.4**	**(0.9)**	**36.3**
Total Provisions	**67.4**	**23.5**	**(24.1)**	**-**	**0.2**	**(1.7)**	**65.2**

[1] *Variations in provisions for financial liabilities relate to the provision for asbestos litigation recorded by Domco Products Texas Inc.*

6.2 Contingent liabilities

In 2024, there were no significant changes relating to the guarantees granted by Tarkett to third parties.

Proceeding initiated by a trade association for installers

By decision No. 17-D-20, Tarkett, as well as some of its competitors, were convicted on 18 October 2017 by the Competition Authority for implementing anti-competitive practices on the French resilient flooring market.

As a result of this decision, in November 2018,a claim for damages was brought before the Paris Commercial Court by an installers association against Tarkett. The purpose of this action is to seek compensation for alleged injury due to practices sanctioned by the Competition Authority. As part of this proceeding, Tarkett was convicted in early 2022 at first instance but appealed this judgement before the Paris Court of Appeal. The appeal proceeding is still ongoing as at 31 December 2024.

Proceeding initiated by public and private health institutions

Before the expiry of the five-year period of limitation which ran from this decision to 18 October 2022, summonses and applications were filed with civil and administrative courts, in particular by public and private health institutions, seeking compensation for potential damages. As at 31 December 2024, most of these procedures are still at a preliminary stage, as no substantive decision has yet been taken.

The Group contests the merits of these claims, is examining all possibilities for potential action or appeal, and considers that it is not currently feasible to assess the possible consequences.

Asbestos dispute

In the United States, the Group has been a defendant in lawsuits by third parties relating to personal injury from asbestos. The expected costs of current and future cases are covered by the Group's insurance, warranties granted by third parties and provisions that management, based on the advice and information from its legal counsel, considers to be sufficient.

Artificial turf dispute – Duraspine fibre

Within the framework of the collective appeals concerning complaints relating to defects in artificial turf pitches installed between 2005 and 2012 in the states of California, Florida, New Jersey, New York and Pennsylvania, an agreement was reached on 2 July 2024 and validated by a federal court in New Jersey. Fieldturf USA (subsidiary of Tarkett SA) has committed to pay claimants' legal costs in the amount of $8.5 million (provision recorded in the consolidated accounts for the year ended 31 December 2024). In addition, the claims were submitted by the complainants within the 3-month period set out in the agreement of July 2024 and a provision was recognized in this regard for $1.0 million..

Note 7 > Financing and Financial Instruments

7.1 Significant accounting principles

Non-derivative financial assets

Financial assets are initially recognized at their fair value plus any applicable transaction costs except for financial assets at fair value through profit or loss for which transactions costs are recognized in profit or loss as incurred.

Under IFRS 9, all financial assets for which the cash flows do not represent solely payment of principal and interest (SPPI) must be recorded at fair value through profit and loss. However, IFRS 9 introduces an option that may be irrevocably elected at the time of initial recognition, investment by investment, permitting equity investments to be recorded at fair value through other comprehensive income, without later being moved to profit and loss, even in the event of a disposal. Only the dividends are recognized in profit or loss.

Financial assets for which the cash flows do represent solely payment of principal and interest (SPPI) are recognized at amortized cost using the effective interest rate method.

For non-current assets valued at amortized cost, impairment is assessed individually, taking into account the risk profile of the counterparty and the warranties obtained. At the time of the initial recording of such non-current financial assets, impairment is systematically recorded in the amount of the credit losses expected to result from events that may occur in the next twelve months. In the event of a significant deterioration in the counterparty's credit quality, the initial impairment is supplemented to cover all of the expected losses over the remaining maturity of the receivable.

For commercial receivables, the Group conducts a review of each of its customer receivables individually, taking into account the probability of default by the counterparty as well as the extent to which the receivables were hedged, and uses the simplified method provided for by IFRS 9 to provision the expected losses over the remaining maturity of the receivables.

Non-derivative financial liabilities

Financial liabilities comprise financial debt and trade and other operating payables. They are accounted for at amortized cost using the effective interest rate method.

Derivative instruments

Derivative instruments are entered in the balance sheet at their fair value, regardless of whether it is positive or negative. The profit or loss stemming from the fair value re-evaluation is recognized immediately in profit and loss.

However, derivative instruments that qualify for hedge accounting are classified either as fair value hedges (FVH) (when their purpose is to hedge an existing asset or liability's exposure to the risk of changes in its fair value) or cash flow hedges (CFH) (when their purpose is to hedge the exposure to changes in the cash flows associated with highly probable future transactions).

Derivative instruments that are part of a hedge are documented on the basis of intrinsic value for exchange rate and interest rate options, and on the basis of the spot price component for forward contracts.

Changes in fair value relating to the effective portion of derivative exchange rate and interest rate instruments qualified as fair value of hedges (FVH) are recognized as part of financial income or expense. The value of the hedged items is adjusted to their fair value and the changes in fair value attributable to the hedged risk(s) are equally recognized as part of income or expense.

Changes in fair value relating to the effective portion of derivative exchange instruments and interest rate instruments qualified as cash flow hedges (CFH) are recorded in the comprehensive equity income. The result of these hedges is recognized in the income statement symmetrically to the hedged risk.

The time value of exchange rate and interest rate options is recorded as a cost of hedging. Changes in time value recorded over the life of the option are recorded as a counterpart to other comprehensive income. The initial option premium is either (i) moved into profit or loss when the hedged transaction impacts profit or loss, where the hedged item is related to a transaction; or (ii) amortized in profit or loss over the duration of the hedge, where the hedged item is related to a period of time.

Changes in value of the swap point for forward contracts classified as hedges are recorded in profit and loss.

Cash and cash equivalents

Cash and cash equivalents comprise cash at bank and on hand, term deposits, monetary UCITs, and other monetary investments with initial maturities not exceeding three months and subject to an insignificant risk of changes in value.

7.2 Financial income and expenses

Net financial income and expenses include, in particular, interest payable on borrowings accounted for at amortized cost using the effective interest method, and the effects of the related hedges.

Other financial income and expenses include the income and expenses associated with loans and receivables accounted for at amortized cost, the gains recognized in respect of investment of cash and cash equivalents, financial charges relating to the discounting of post-employment expenses, exchange rate gains and losses, impairment losses relating to financial assets, and dividends, which are recorded in net income when the right to payment vests.

(in millions of euros)	**Dec. 31, 2024**	**Dec. 31, 2023**
Interest income on loan assets & cash equivalents	7.9	4.9
Other financial income	1.8	2.3
Total financial income	**9.7**	**7.2**
Interest expenses on loans and overdrafts	(29.2)	(34.7)
Financial expenses to leases	(8.2)	(6.6)
Commission expenses on financial liabilities	(16.4)	(14.5)
Cost of loans and debt renegotiation	(4.2)	(4.4)
Financial expenses on provisions for pensions	(4.2)	(5.0)
Foreign exchange differences	(6.6)	(5.7)
Impairment of financial assets	(0.0)	-
Premiums and term points on derivatives	(4.8)	(7.3)
Other financial expenses	1.7	1.8
Total financial expenses	**(72.0)**	**(76.4)**
Financial income and expenses	**(62.3)**	**(69.2)**

7.3 Net debt – interest-bearing loans and borrowings

7.3.1 Net Debt

Net debt is defined by adding together interest-bearing loans and debt and deducting cash and cash equivalents. Interest-bearing loans and borrowings refer to any obligation for the repayment of funds received or raised that are subject to repayment terms and interest charges. They also include liabilities on finance leases IFRS 16.

	Dec. 31, 2024		Dec. 31, 2023	
(in millions of euros)	**Long-term**	**Short-term**	**Long-term**	**Short-term**
Bank loans	12.2	16.7	24.8	16.7
Shareholder loan	582.9	-	520.4	-
Private placements	37.5	10.0	47.5	18.0
Other loans	-	-	-	-
Bank overdrafts	-	5.6	-	5.3
Interest bearing loans and borrowings	**632.6**	**29.0**	**592.6**	**40.0**
Total interest bearing loans and borrowings	**661.7**		**632.6**	
Cash and cash equivalents	(352.4)		(224.3)	
Net debt before application of IFRS 16	**309.3**		**408.3**	
Leases	95.9	29.5	111.8	31.6
Net debt	**434.7**		**551.7**	

In order to finance the Group's acquisition programme, Tarkett has entered into an additional shareholder loan of a maximum amount of €100 million, with a maturity date and interest terms identical to those of the existing shareholder loan.

On 31 December 2024, Tarkett had used its non-recourse receivables assignment lines for a net financed amount of €178.1 million or equivalent.

Cash and cash equivalents amounted to €352.4 million as of 31 December 2024.

On 31 December 2024, interest-bearing loans and borrowings consisted essentially of:

- The two shareholder loans of Tarkett Participation entered into in July 2021 and November 2024, used as at 31 December 2024 amounting to €419 million and $69.5 million for the first, and €97 million for the second;
- Tarkett's bond loan of €31.5 million maturing in June 2031;
- Four amortisable loans totalling €24.6 million at 31 December 2024 and maturing between June 2026 and May 2027;
- Three "Schuldschein" tranches amounting to €16 million entered into in June 2019, which will reach maturity in June 2025 for €10 million and in June 2026 for €6 million.

The revolving line of credit is not used as at 31 December 2024.

7.3.2 Details of loans and borrowings

Dec. 31, 2024 *(in millions of euros)*	Currency of draw-down	Interest rate	Total	12 months or less until 12/31/2025	2 years until 12/31/2026	3 to 5 years until 12/31/2029	More than 5 years
Bank loans							
Other bank loans	EUR	3.47%	25.6	13.4	10.1	2.1	-
Other bank loans	RMB	5.22%	0.1	0.1	-	-	-
Subtotal Bank loans			**25.7**	**13.5**	**10.1**	**2.1**	**-**
Private placements Europe	EUR	4.89%	47.5	10.0	6.0	-	31.5
Shareholder loan	EUR	6.13%	516.0	-	-	516.0	-
Shareholder loan	USD	8.51%	66.9	-	-	66.9	-
Bank overdrafts			5.6	5.6	-	-	-
Interest bearing loans and borrowings			**661.7**	**29.1**	**16.1**	**585.0**	**31.5**
Leases			125.4	33.8	27.4	47.0	17.3
Gross debt			**787.1**	**62.9**	**43.5**	**632.0**	**48.8**

Dec. 31, 2023 *(in millions of euros)*	Currency of draw-down	Interest rate	Total	12 months or less until 12/31/2024	2 years until 12/31/2025	3 to 5 years until 12/31/2028	More than 5 years
Bank loans							
Other bank loans	EUR	4.36%	41.0	16.1	12.7	12.1	-
Other bank loans	RMB	5.22%	0.4	0.4	-	-	-
Subtotal Bank loans			**41.4**	**16.6**	**12.7**	**12.1**	**-**
Private placements Europe	EUR	3.90%	65.5	18.0	10.0	6.0	31.5
Shareholder loan	EUR	7.58%	455.2	-	-	455.2	-
Shareholder loan	USD	9.80%	65.2	-	-	65.2	-
Bank overdrafts			5.3	5.3	-	-	-
Interest bearing loans and borrowings			**632.6**	**39.9**	**22.7**	**538.5**	**31.5**
Leases			143.4	31.6	29.9	57.4	24.5
Gross debt			**776.0**	**71.5**	**52.6**	**595.9**	**56.0**

7.3.3 Financial ratio covenants

The "Schuldschein" tranches and the bond loan mentioned above contain contractual commitments (covenants) to be respected by the borrowing companies, among which is the "Net debt/adjusted EBITDA" financial ratio, which must not exceed:

- 3.0 at 31 December of each year for "Schuldschein" tranches, calculated before the application of IFRS 16, with an additional tolerance of 0.5 in the event of significant acquisition;
- 4.0 at 31 December each year for the bond, calculated after application of IFRS 16, with an additional tolerance of 0.5 in the case of significant acquisition.

The Group is in compliance with all of its banking commitments as of December 31, 2024, including the ratio covenant "Net Debt / Adjusted EBITDA", as detailed below.

Net debt / Adjusted EBITDA *before application of IFRS 16* *(in millions of euros)*	Dec. 31, 2024	Dec. 31, 2023
Net debt	309.3	408.3
Adjusted EBITDA	286.2	248.0
Ratio	**1.1**	**1.6**

The financial leverage ratio presented below is the ratio of net debt, including leases recognized under IFRS 16, to adjusted EBITDA (including IFRS 16).

Net debt / Adjusted EBITDA *after application of IFRS 16* *(in millions of euros)*	**Dec. 31, 2024**	**Dec. 31, 2023**
Net debt	434.7	551.7
Adjusted EBITDA	329.3	287.8
Ratio	**1.3**	**1.9**

7.3.4 Cash and cash equivalents

(in millions of euros)	**Dec. 31, 2024**	**Dec. 31, 2023**
Current cash	72.0	55.7
Remunerated cash balances [1]	219.4	160.7
Short term treasury notes and Money Market funds	60.9	7.9
Cash and cash equivalents	**352.4**	**224.3**

[1] *included cash restricted*

As of December 31, 2024, cash and cash equivalents include restricted funds amounting to €87.1 million, with €80.6 million in Russia, €6.0 million in Ukraine, and €0.5 million in Argentina. These restrictions limit the Group's ability to access or use this cash; it is nevertheless available for local business needs.

In Russia, cash repatriation is particularly constrained by international sanctions and local capital control measures. The Group has not obtained authorization to remit dividends since the start of the war in Ukraine in 2021, and is unable to determine whether it will receive the necessary approvals.

7.3.5 Changes in financial liabilities

The following table reconciles changes in financial liabilities shown on the balance sheet and the cash flow statement:

(in millions of euros)	**Dec. 31, 2023**	**Cash-flows**	**Reclassification**	**Non-cash change**				**Dec. 31, 2024**
				Other [4]	**Acquisition [3]**	**Foreign exchange differences**	**Fair value change**	
Long-term financial liabilities	704.5	32.4	(48.8)	(8.5)	32.9	16.1	-	728.5
Short-term financial liabilities	71.4	(62.0)	48.8	(2.0)	1.0	1.2	-	58.4
Long-term financial assets [1]	(13.2)	0.3	-	0.2	-	(0.4)	4.5	(8.6)
Short-term financial assets	(3.2)	-	-	-	-	(0.2)	-	(3.4)
Other	-	0.9	-	-	-	-	-	-
Total changes in financing activities [2]		**(28.3)**						
Cash-flows from financing activities [2]		**(28.3)**						

[1] *Excluding shares accounted for by the equity method.*
[2] *Excluding dividends, acquisition of treasury shares and acquisition of non-controlling interests.*
[3] *including € 32.9 million for new leases for fiscal year 2023*
[4] *including € 10.4 million euros for the partial disposal of Diamond W assets*

7.4 Other financial assets and liabilities

7.4.1 Other financial assets

(in millions of euros)	Dec. 31, 2024	Dec. 31, 2023
Long-term investments	-	-
Financial investments and receivables – long-term [1] [2]	16.8	25.5
Other financial assets	**16.8**	**25.5**

[1] *Financial investments and receivables – long-term include shares of companies accounted for by the equity method.*

[2] *Long-term financial assets include the long-term portion of the market value of interest rate hedges.*

Changes in gross values, amortization and impairment loss are presented below:

Acquisition costs *(in millions of euros)*	Dec. 31, 2023	Increases	Decreases	Transfer	Foreign exchange differences	Dec. 31, 2024
Long-term investments	-	-	-	-	-	-
Financial investments and receivables – long-term	25.5	1.2	(5.4)	(5.3)	0.9	16.8
Other financial assets	**25.5**	**1.2**	**(5.4)**	**(5.3)**	**0.9**	**16.8**

Accumulated depreciation and amortization *(in millions of euros)*	Dec. 31, 2023	Allowance	Disposal	Decrease	Impairment losses	Transfer	Foreign exchange differences	Dec. 31, 2024
Security deposit – long-term	-	-	-	-	-	-	-	-
Long-term financial assets and receivables	(0.0)	-	-	-	-	-	-	(0.0)
Other financial assets	**(0.0)**	**-**	**-**	**-**	**-**	**-**	**-**	**(0.0)**

7.4.2 Other financial liabilities

(in millions of euros)	Dec. 31, 2024	Dec. 31, 2023
Fair value of derivatives non-current	-	-
Other financial liabilities non-current	0.9	1.5
Other financial liabilities non-current	**0.9**	**1.5**
Accrued interest expenses current	-	-
Fair value of derivatives current	1.7	1.4
Other financial liabilities current	4.1	1.9
Other financial liabilities current	**5.8**	**3.2**

7.5 Fair value of financial assets and liabilities

When measuring the fair value of an asset or a liability, the Group uses market observable data as far as possible.

Fair values are categorized into three levels based on the inputs used in the valuation techniques, as follows:

- Level 1: quoted prices (unadjusted) on active markets for identical assets or liabilities;
- Level 2: prices determined using valuation techniques based on observable market data;
- Level 3: inputs relating to the asset or liability that are not based on observable market data (unobservable inputs).

The fair value of interest rate swaps and of interest rate and foreign currency options is the estimated amount that the Group would expect to receive or have to pay in order to cancel each derivative instrument at the balance sheet date, taking into account the current level of interest rates and the credit risk associated with these instruments' counterparties.

The derivative financial instruments (swaps, caps, floors etc.) entered into by the Group are traded on over-the-counter markets on which there are no quoted prices. They are therefore measured using the valuation models commonly employed by operators in the market (Level 2).

Derivative instrument contracts are negotiated exclusively with leading financial institutions or banks. Their sole aim is to provide security for the Group's transactions and the financing of the latter.

In the case of receivables and payables with maturities of less than a year and certain floating rate receivables and payables, historical cost is considered as a reasonable approximation of their fair value.

Dec. 31, 2024 *(in millions of euros)*	**Fair Value Category**	**Assets at amortized cost**	**Liabilities at amortized cost**	**Fair value through profit and loss**	**Fair value of interest rate hedge instruments**	**Carrying amount**	**Fair value**
Financial assets, non-current	Level 2	3.8	-	9.9	3.1	16.8	16.8
Other current financial assets	Level 2	-	-	-	9.5	9.5	9.5
Trade receivables	Level 2	225.1	-	-	-	225.1	225.1
Cash and cash equivalents	Level 2	-	-	352.4	-	352.4	352.4
Interest-bearing loans and borrowings	Level 2	-	787.0	-	-	787.0	787.0
Other non-current financial liabilities	Level 2	-	0.3	-	0.6	0.9	0.9
Other current financial liabilities	Level 2	-	4.0	-	1.7	5.7	5.7
Trade payables	Level 2	-	388.5	-	-	388.5	388.5

Dec. 31, 2023 *(in millions of euros)*	**Fair Value Category**	**Assets at amortized cost**	**Liabilities at amortized cost**	**Fair value through profit and loss**	**Fair value of interest rate hedge instruments**	**Carrying amount**	**Fair value**
Financial assets, non-current	Level 2	2.3	-	13.4	9.9	25.5	25.5
Other current financial assets	Level 2	-	-	-	17.9	17.9	17.9
Trade receivables	Level 2	262.9	-	-	-	262.9	262.9
Cash and cash equivalents	Level 2	-	-	224.3	-	224.3	224.3
Interest-bearing loans and borrowings	Level 2	-	776.0	-	-	776.0	776.0
Other non-current financial liabilities	Level 2	-	0.2	-	1.3	1.5	1.5
Other current financial liabilities	Level 2	-	1.8	-	1.4	3.2	3.2
Trade payables	Level 2	-	379.4	-	-	379.4	379.4

7.6 Financial risks and Financial Instruments

7.6.1 Financial risk management

The Group's financial risk (market risk, credit risk and liquidity risk) management objectives and policies are consistent with those disclosed in the consolidated financial statements as at December 31, 2023.

7.6.2 Derivative instruments

The Group uses derivative financial instruments to hedge some of its exposure to foreign currency risk and interest rate risk associated with its purchases and sales denominated in foreign currencies and with its financing and investment transactions, as well as to hedge certain components of its raw materials costs.

The derivatives employed include interest rate options, other forward contracts and foreign currency options.

In accordance with its policy in respect of financial instruments, the Group neither uses nor issues derivative financial instruments for trading purposes.

Dec. 31, 2024 *(in millions of euros)*	**Accounting classification**	**Maturity**	**Fair value**	**Counterpart in OCI** [1]
Currency swaps	FVH	< June 2025	(0.6)	-
Exchange rate derivatives related to financing			**(0.6)**	**-**
Forward exchange contracts	CFH	< April 2026	(0.0)	-
Options	CFH	< May 2026	0.8	0.8
Commodity swaps	CFH		-	-
Exchange rate derivatives related to commercial transactions			**0.8**	**0.8**
Caps, collars	CFH	< Dec. 2027	10.1	10.1
Interest rate derivatives			**10.1**	**10.1**
Total			**10.3**	**10.9**

[1] *Corresponds to the balance of the counterpart in OCI as of December 31, 2024.*

Dec. 31, 2022 *(in millions of euros)*	**Accounting classification**	**Maturity**	**Fair value**	**Counterpart in OCI** [1]
Currency swaps	FVH	< June 2024	(0.1)	-
Exchange rate derivatives related to financing			**(0.1)**	**-**
Forward exchange contracts	CFH	< August 2024	(0.1)	(0.1)
Options	CFH	< May 2025	1.8	1.7
Commodity swaps	CFH		-	-
Exchange rate derivatives related to commercial transactions			**1.7**	**1.6**
Caps, collars	CFH	< Dec. 2027	23.6	23.2
Interest rate derivatives			**23.6**	**23.2**
Total			**25.2**	**24.8**

[1] *Corresponds to the balance of the counterpart in OCI as of December 31, 2023.*

The acronyms "FVH" (Fair Value Hedge) and "CFH" (Cash Flow Hedge) are defined in Note 7.1.

The face value of derivative instruments covering the primary exposures are presented below, expressed in euros:

(in millions of euros)	Dec. 31, 2024					Dec. 31, 2023				
Currency of exposure	**USD**	**CNY**	**GBP**	**AUD**	**NOK**	**USD**	**CNY**	**GBP**	**PLN**	**NOK**
Exchange rate derivative instruments	125.0	20.7	10.3	2.2	-	126.3	20.0	8.5	4.2	-
Exchange rate derivatives related to commercial transactions	44.3	-	33.8	-	21.2	36.0	-	28.7	-	21.8
Total	**169.3**	**20.7**	**44.1**	**2.2**	**21.2**	**162.3**	**20.0**	**37.2**	**4.2**	**21.8**

7.6.3 Market risks

Exposure to interest rate, currency, raw material prices, liquidity and credit risk arises in the normal course of Tarkett's activities. Derivative financial instruments are used to reduce the exposure to fluctuations in both foreign exchange and interest rates; changes in the value of these instruments offset all or part of the changes in the value of the items being hedged. Liquidity and credit risk are managed following risk management policies approved by the Group's management bodies.

a) Interest rate risk

The Group manages its exposure to interest rate risk centrally. The Group's general debt strategy is to give preference to floating interest rate debt over fixed interest rate debt, but also to use interest rate derivatives to protect a part of the floating rate debt over a period of three to five years against a rate increase that could result in extensive damage. The hedging tools used are mainly cap or tunnel type derivatives. The cost of the cap may be offset in part or in full by a tunnel.

Following is the interest rate structure of the Group's net debt (excluding lease liabilities) before and after application of interest rate hedges.

(in millions of euros)	Fixed rate	Floating rate	Dec. 31, 2024
Interest-bearing loans and borrowings	56.3	605.4	661.7
Cash and cash equivalents	(7.4)	(345.0)	(352.4)
Net debt before hedging	**48.9**	**260.4**	**309.3**
Effect of hedging on debt	481.8	(481.8)	-
Net debt after hedging	**530.8**	**(221.4)**	**309.3**

(in millions of euros)	Fixed rate	Floating rate	Dec. 31, 2023
Interest-bearing loans and borrowings	78.8	553.8	632.6
Cash and cash equivalents	(8.7)	(215.6)	(224.3)
Net debt before hedging	**70.1**	**338.2**	**408.3**
Effect of hedging on debt	553.8	(553.8)	-
Net debt after hedging	**623.9**	**(215.6)**	**408.3**

Sensitivity analysis

Sensitivity to interest-rate fluctuations is calculated on the basis of interest-bearing non-derivatives and derivative Financial Instruments, as well as interest-bearing loans granted to joint ventures or third parties. The analysis is based on the market index in effect at the balance sheet date and on assumptions of constant debt and constant debt management policy over one year.

(in millions of euros)	**Dec. 31, 2024**	**Dec. 31, 2023**
Increase of 100 basis points		
Increase / (Decrease) in financial expenses	1.2	0.2
Increase of 100 basis points [1]		
Increase / (Decrease) in financial expenses	(1.9)	(0.5)

[1] *With a floor of 0%*

b) Exchange rate risk

Transaction risk

Exchange rate fluctuations have a direct impact on the Group's Consolidated Financial Statements, derived from transactions regarding the Group entities that incur revenues and expenses in currencies other than their functional currency.

Exchange rate derivatives related to commercial transactions

The Group reduces its exposure by developing its production capacities in the same geographic and monetary areas where it distributes its products. Moreover, through the choice of the invoicing currency for certain intra-Group transactions, the Group aims to offset revenues with costs in the same currency. In certain unstable currency countries, the Group may also offset the local currencies fluctuations with price indexations. Therefore the remaining exposure on cross-border transactions is moderate. The currencies to which the Group is most exposed are the British pound, the Norwegian crown, the U.S. dollar, the Polish zloty, the Australian dollar, the Canadian dollar, the Russian ruble and the euro as a foreign currency for certain subsidiaries.

The Group has attempted to reduce the impact of short-term fluctuations of currencies on its revenue through centralized management of exchange risks and the use of derivatives. Nevertheless, in the long-term, significant and long lasting variations in exchange rates could affect the Group's competitive position in foreign markets, as well as its results of operations.

The Group's policy is to hedge certain significant residual exposure, decided upon periodically by the finance department based on monitoring Value at Risk. This exposure is divided into exposure recorded on the balance sheet, namely trade receivables, trade payables and borrowings denominated in a foreign currency, and future exposure, which consists of forecast sales and purchases over a six- to eighteen-month period.

Exchange rate derivative instruments relating to financing

The Group may be exposed to transactional exchange-rate risk on certain intragroup loans and borrowings resulting from the financing of its foreign subsidiaries. The Group minimizes this risk either (i) by borrowing in the same currency or (ii) by entering into currency swaps or forwards reflecting the maturity of the hedged item.

7.6.4 Liquidity risks

a) Future cash flows on Financial Instruments

The following figures show the estimated future cash flows on interest-bearing loans and borrowings recorded as liabilities on the balance sheet.

The estimate of future cash flows on interest is based on the debt amortization table and on the assumption of a crystallization of the interest rates outstanding as of the balance sheet date, unless a better estimate is available.

Financial liabilities	Dec. 31, 2024		Less than 12 months		1 to 2 years		3 to 5 years		More than 5 years	
(in millions of euros)	Carrying amount	Total future cash flows	Principal	Interest	Principal	Interest	Principal	Interest	Principal	Interest
Gross debt										
Bank loans	25.7	34.1	13.5	3.3	10.1	3.0	2.1	2.0	-	-
Private placements	47.5	61.4	10.0	2.3	6.0	2.2	-	6.4	31.5	3.1
Other loans	582.9	697.0	-	30.3	-	34.2	582.9	49.6	-	-
Bank overdrafts	5.6	5.6	5.6	-	-	-	-	-	-	-
Leases	125.4	125.4	33.4	7.3	26.4	5.3	34.2	6.7	9.9	2.2
Total	**787.1**	**923.4**	**62.5**	**43.1**	**42.5**	**44.7**	**619.2**	**64.8**	**41.4**	**5.3**
Other financial liabilities										
Trade payables	388.5	388.5	388.5	-	-	-	-	-	-	-
Other non-current financial liabilities	0.9	0.9	-	-	0.7	-	0.2	-	-	-
Other current financial liabilities	5.7	5.7	5.7	-	-	-	-	-	-	-
Total	**395.1**	**395.1**	**394.2**	**-**	**0.7**	**-**	**0.2**	**-**	**-**	**-**
Total financial liabilities	**1,182.2**	**1,318.5**	**456.7**	**43.1**	**43.2**	**44.7**	**619.4**	**64.8**	**41.4**	**5.3**

Financial liabilities	Dec. 31, 2023		Less than 12 months		1 to 2 years		3 to 5 years		More than 5 years	
(in millions of euros)	Carrying amount	Total future cash flows	Principal	Interest	Principal	Interest	Principal	Interest	Principal	Interest
Gross debt										
Bank loans	41.4	55.7	16.6	4.0	12.7	4.2	12.1	6.1	-	-
Private placements	65.5	81.9	18.0	2.4	10.0	2.3	6.0	6.5	31.5	5.2
Other loans	520.4	665.0	-	27.3	-	27.1	520.4	90.2	-	-
Bank overdrafts	5.3	5.3	5.3	-	-	-	-	-	-	-
Leases	143.4	163.5	31.6	7.1	29.9	5.3	57.4	6.2	24.5	1.5
Total	**776.0**	**971.4**	**71.5**	**40.8**	**52.6**	**38.9**	**595.9**	**109.0**	**56.0**	**6.7**
Other financial liabilities										
Trade payables	379.4	379.4	379.4	-	-	-	-	-	-	-
Other non-current financial liabilities	1.5	1.5	-	-	0.9	-	0.6	-	-	-
Other current financial liabilities	3.2	3.2	3.2	-	-	-	-	-	-	-
Total	**384.1**	**384.1**	**382.6**	**-**	**0.9**	**-**	**0.6**	**-**	**-**	**-**
Total financial liabilities	**1,160.1**	**1,355.5**	**454.1**	**40.8**	**53.5**	**38.9**	**596.5**	**109.0**	**56.0**	**6.7**

b) Liquidity position

The debt capacity amounts to €1,218.9 million, including €125.4 million relating to the lease debt (IFRS 16), used in the amount of €787.1 million (see note 7.3.1). Including cash and cash equivalents, the Group's liquidity position is therefore €784.2 million.

(in millions of euros)	Dec. 31, 2024	Dec. 31, 2023
Amount available on credit facilities	431.9	431.6
Cash and cash equivalents	352.4	224.3
Total	**784.2**	**655.9**

7.6.5 Credit risk

Credit risk represents the risk of financial loss for the Group in the event that a counterparty to a financial instrument defaults on its contractual obligations.

The financial assets potentially bearing this risk are mainly:

- cash deposits;
- derivative instruments;
- trade receivables;
- loans granted.

The maximum potential credit risk on the financial assets is equal to their net accounting value less the indemnification receivable from credit insurance.

a) Customer credit risk

The Group believes that its exposure to customer credit risk is limited, because of its large number of customers, its dispersion in many geographical areas, and its follow-up policy. The Group has established a credit policy which includes, among other things, a credit limit for each customer, collections processes, and a computer-aided credit scoring and customer payment behaviour follow-up.

The total of receivables overdue over 60 days amounts to approximately 9% of total accounts receivable as of December 31, 2024 (10% of total accounts receivable as of December 31, 2023).

The Group believes that there is no need to assume that there is risk on outstanding receivables less than 60 days overdue.

With respect to outstanding receivables that are more than 60 days overdue, the Group believes that risks are limited given existing procedures for customer risk management (as detailed above).

b) Credit risk management on equities and derivatives

The counterparties to the Group's financial derivatives are leading banks, all of which have business relationships with the Group for debt or cash management. The Group's policy with regard to investments and cash deposits is to only invest in liquid securities and only with the leading credit institutions in the countries where the investments are made.

The Group is not exposed to a material risk due to any significant concentration and does not anticipate any counterparty default.

The effect of Credit and Debit Valuation Adjustments (CVA/DVA) on the measurement of the fair value of the derivative financial instruments was not material as at the balance sheet date and was therefore not booked.

7.7 Guarantees

The principal guarantees given by Tarkett are as follows:

- a General Indemnity Agreement of a maximum amount of USD 75.0 million in favour of Federal Insurance Company in consideration of an agreement to execute security bonds in favor of FieldTurf Inc, fully used as of year-end;
- a Joint and Several Guarantee up to a maximum amount of $120 million in favour of Ester Finance Technologies as part of the receivables assignment line set up with certain subsidiaries of Tarkett Finance Inc in the United States, in order to secure future customer collections to be collected on its behalf accounting for €97.3 million at the end of the financial year;
- a Pri-Pensions pension insurance guarantee to cover Tarkett AB's benefit obligations in the amount of SEK 256.9 million;
- joint and several guarantees in favour of several banks, in the amount of outstanding depreciable loans taken out respectively in 2022 June and 2023 April by Tarkett France, and in 2023 May and 2023 June by Tarkett GDL, representing a total outstanding amount of €24.6 million at the end of the financial year;
- rental bonds in favour of two landlords of Tarkett USA Inc. representing a commitment of $7.9 million at the end of the financial year, and the corresponding rents of which are included in the lease debt valued in the consolidated balance sheet in application of IFRS 16 "Leases";
- rent guarantees in favor of two lessors of Tarkett USA Inc. representing a commitment of USD 8.6 million at the end of the financial year, and the corresponding rents of which are included in the lease debt valued in the consolidated balance sheet in application of IFRS 16 "Leases";
- a payment guarantee given to a supplier of the Morton Extrusiontechnik subsidiary (M.E.T GmbH) for deliveries of raw materials up to a maximum amount of €7 million, committed in the amount of €1.7 million at the end of the financial year;
- guarantees granted by Tarkett to banks of certain subsidiaries, including Tarkett Limited (UK), Tarkett BV (Netherlands), Tarkett Asia Pacific (Shanghai) Management Co Ltd, Morton Extrusiontechnik GmbH (Germany), Fieldturf Tarkett SAS (France) et Fieldturf Poligras SA (Spain), to enable them to obtain overdraft facilities, bank loans or lines of credit for a maximum aggregate amount of €32.8 million, committed for an equivalent of €14.4 million at the end of the financial year.

Furthermore, in the ordinary course of business, Tarkett and several Group subsidiaries have granted payment or construction site guarantees to various suppliers, customers, utilities, landlords, central cash management, or financial operators, either directly or through bank guarantees, for a total amount equivalent to €48.6 million at the end of the financial year.

Finally, the following assets have been pledged as security for the new financing implemented:

- all present or future shares of Tarkett SA held by Tarkett Participation;
- all present or future shares of the following subsidiaries, owned directly or indirectly by Tarkett SA: Tarkett GDL SA, Tarkett AB, Tarkett BV, Tarkett Holding GmbH, Tarkett Finance Inc., Tarkett USA Inc., Fieldturf Tarkett USA Holdings Inc., Fieldturf USA Inc., AO Tarkett et AO Tarkett Rus;
- certain financial receivables contracted between two of the above companies.

Note 8 > Income tax

8.1 Income tax expense

Income tax on the profit or loss for the year comprises current and deferred tax. Income tax is recognized in the income statement except to the extent that it relates to items in equity or in other comprehensive income, in which case it is recognized in those items.

Current tax is the expected tax payable on the taxable income for the year, using tax rates enacted or substantially enacted at the balance sheet date, and any adjustment to tax payable with respect to previous years. Income tax expense/income are defined in Note 8.2, Deferred Taxes.

Income tax is calculated based on the rules applicable in each country where the Group operates.

The "Cotisation sur la Valeur Ajoutée des Entreprises (C.V.A.E.)" tax contribution due in France on the basis of the value added as determined based on the statutory accounts of French entities the statutory accounts meets the definition of income tax under IAS 12, "Income Taxes" and is classified on the current income tax line. Similar treatment has been adopted for similar other taxes (State Tax and BEAT Tax in the United States, in particular) based on a net of products and costs, even though that amount may differ from accounting net income.

The income tax expense (current and deferred) can be analysed as follows:

(in millions of euros)	**Dec. 31, 2024**	**Dec. 31, 2023**
Current tax	(30.3)	(44.3)
Deferred tax	(5.6)	9.0
Total income tax	**(35.9)**	**(35.4)**

Theoretical income taxes determined using the French corporate income tax rate of 25.825% for 2024 and 2023, can be reconciled as follows to the actual income tax charge:

(in millions of euros)	**Dec. 31, 2024**	**Dec. 31, 2023**
Pre-tax profit from continuing operations (a)	(26.1)	55.8
Profit from equity-accounted subsidiaries (b)	(0.0)	(0.1)
Pre-tax profit from fully consolidated activities (a- b)	(26.1)	55.9
Income tax at nominal French income tax rate	**6.7**	**(13.7)**
Effect of:		
• Taxation of foreign companies at different rates	(3.3)	(0.3)
• Exchange rate effects on non-monetary assets	(0.0)	(0.0)
• Changes in unrecognized deferred tax assets	(6.3)	(2.1)
• Permanent differences	(25.7)	(9.7)
• Withholding tax on international flows	(4.2)	(2.0)
• Other items	(3.1)	(7.5)
Income tax expenses	**(35.9)**	**(35.4)**
Effective rate	**N/A**	**N/A**

Differences between local and French taxation rates

The main contributing countries are Russia, with a local tax rate of 20.00%; Sweden, with a local tax rate of 20.60%; Luxembourg, with a local tax rate of 27.02%; Serbia, with a local tax rate of 15.00% and the United Arab Emirates, with a local tax rate of 9.00%.

Changes in unrecognized deferred tax assets

The non-recognition of deferred tax assets of (€6.3) million is mainly due to tax losses in Germany and Turkey, which are offset by the recognition of deferred tax assets in Poland.

Permanent differences

The permanent differences identified are mainly related to goodwill impairments on France amounting to (€11.5) million, Serbia amounting to (€7.0) million and Russia amounting to (€1.1) million, as well as an abandonment of receivables in Luxembourg amounting to (€4.9) million.

Withholding taxes on international flows

Non-deductible withholding taxes are mainly related to management fees and dividends in France for (€2.3) million, to royalties and dividends in Luxembourg for (€1.9) million.

Other items

In 2024, this item includes:

- tax correction charges amounting to €5.4 million mainly in the United States for €11.2 million and in Luxembourg for (€4.8) million;
- taxes recorded as corporate income tax for (7.4) million euros, mainly in the United States for (7.8) million euros, including (3.3) million euros for the BEAT Tax and (4.5) million euros for the State Tax;
- Impacts of changes in tax rates amounting to 2.7 million, including €3.0 million in the linked United States, €1.8 million in Russia and (€2.1) million in Luxembourg;
- tax provisions of €2.3 million.

8.2 Deferred tax

Deferred tax is calculated using the balance sheet method, providing for temporary differences between the carrying amounts of assets and liabilities for financial reporting purposes and the amounts used for taxation purposes. The amount of deferred tax provided is based on the expected manner of realization or settlement of the carrying amount of assets and liabilities, using tax rates enacted or substantially enacted at the balance sheet date.

The following items do not result in the recognition of deferred tax:

- taxable temporary differences linked to goodwill;
- taxable or deductible temporary differences stemming from the initial recognition of assets or liabilities, other than in the context of transactions involving business combinations, that affect neither accounting nor taxable profit;
- temporary differences relating to investments in subsidiaries to the extent that they will probably not reverse in the foreseeable future.

A deferred income tax asset is capitalized only to the extent that it is probable that there will be future taxable profits over the next five years against which this asset can be utilized.

In accordance with IAS 12, where an entity's tax return is prepared in a currency other than its functional currency, changes in the exchange rate between the two currencies generate temporary differences with respect to the valuation of non-monetary assets and liabilities. As a result, deferred tax is recognized in profit or loss.

Based on calculations made by the Tarkett Group as at 31 December 2024, the impact of the global minimum tax is zero.

Deferred taxation is shown on the balance sheet separately from current tax assets and liabilities and is categorized in non-current items.

(in millions of euros)	**2024**	**2023**
Valuation of deferred tax assets	159.5	156.8
DTA for pensions and healthcare benefits	36.2	36.6
Other items temporarily non deductible	111.1	96.3
Provision for other deferred tax liabilities	(10.5)	(11.7)
Internal profit eliminations	1.2	3.0
Netted against deferred tax assets	(199.5)	(188.1)
Deferred tax assets	**97.9**	**92.8**
Fixed assets revaluation	43.2	44.2
Other deferred tax liabilities	160.6	144.5
Netted against deferred tax assets	(199.5)	(188.1)
Deferred tax liabilities	**4.3**	**0.6**

The recoverability of deferred tax assets was analyzed with cash flow projections used for impairment testing.

Net deferred tax assets relating to deferred losses and unused tax credits are recognised for a total amount of €159.5 million, of which €147.9 million relates to Luxembourg and €4.2 million relates to the United Kingdom.

This amount of €159.5 million is broken down as follows: €157.6 million deferred tax assets relating to deferred losses and €1.9 million unused tax credits.

Deferred taxes on unrecognised tax losses and tax credits amounted to €84.8 million as of 31 December 2024 (€83.8 million as of 31 December 2023).

Note 9 > Equity and liabilities

9.1 Share capital

Share capital comprises the par value of the ordinary shares minus incremental costs directly attributable to the issue of ordinary shares and share options, net of any tax effects. When the Group buys back its own shares, the amount of consideration paid, which includes directly attributable costs, is net of any tax effects, and is recognized as a deduction from shareholders' equity. When treasury shares are subsequently sold or reissued, the amount received is recognized as an increase in shareholders' equity, and the resulting surplus or deficit on the transaction is transferred to/from retained earnings.

	Dec. 31, 2024	Dec. 31, 2023
Share capital *(in euros)*	327,751,405	327,751,405
Number of shares	65,550,281	65,550,281
Par value *(in euros)*	5.0	5.0

9.2 Earnings per share and dividends

	Dec. 31, 2024			Dec. 31, 2023		
	Average number of shares *(in millions of shares)*	Profit for the period attributable to Tarkett shareholders *(in millions of euros)*	Basic earnings per share *(in euros)*	Average number of shares *(in millions of shares)*	Profit for the period attributable to Tarkett shareholders *(in millions of euros)*	Basic earnings per share *(in euros)*
Total Shares	65,550			65,550		
Treasury shares held by Tarkett	(19)			(103)		
Total excluding treasury shares	**65,532**	**(62.6)**	**(0.95)**	**65,447**	**20.4**	**0.31**
Potential performance shares to be distributed	19			103		
Restatement of actions with anti-dilution effect [(1)]	(19)			-		
Total after allocation of performance shares	**65,532**	**(62.6)**	**(0.95)**	**65,550**	**20.4**	**0.31**

Basic earnings per share (excl. treasury shares)

Earnings per share (excluding treasury shares) are calculated on the basis of the Group's attributable net profit and on the weighted average number of shares outstanding during the period (and after deduction of the weighted average number of treasury shares).

Earnings per share after grants of performance shares

Attributable net profit per share (after grants of performance shares), are calculated on the basis of the Group's share of net profit attributable to the Group and on the weighted average number of shares outstanding during the period (and after deduction of the weighted average number of treasury shares) and the number of potential shares to distribute, if dilutive.

(1) Pursuant to IAS 33, "Earnings per Share," and given the negative attributable net profit as of December 31, 2024, the potential performance shares for distribution have not been taken into account in calculating the weighted average number of shares outstanding (anti-dilutive effect).

Dividends

The General Meeting of 26 April 2024 decided not to pay dividends in 2024 for the 2023 period given the high level of uncertainties in the short term.

Note 10 > Related parties

In accordance with IAS 24, "Related Party Disclosures," the Group has identified the following related parties:

- Joint ventures;
- Tarkett Participation ;
- The members of the Tarkett Management Board and Supervisory Board.

Transactions entered into during the period with the Group's joint ventures and principal shareholders are detailed below.

10.1 Joint ventures

All transactions between fully consolidated companies have been eliminated.

Transactions with related entities and jointly held entities are entered into on arm's length terms.

The Group has four joint ventures, including Laminate Park GmbH & Co KG in Germany, jointly controlled with the Sonae group.

Transactions entered into during the period with the Group's joint ventures are detailed below :

(in millions of euros)	**Dec. 31, 2024**	**Dec. 31, 2023**
Joint ventures		
Sale of goods to Tarkett	-	-
Purchase of services from Tarkett	-	-
Loans from Tarkett (gross value)	1.9	1.6

10.2 Principal shareholders

Tarkett Participation holds 90.40% of Tarkett's share capital following the contribution of Tarkett shares to Tarkett Participation and the acquisition of shares by Tarkett Participation, and as such controls and coordinates the Group's activities.

As of December 31, 2024, Tarkett Participation is held by:

- Société Investissement Deconinck, for 72.85%;
- Expansion 17 S.C.A., FIAR, for 12.87%;
- Global Performance 17 S.C.A., FIAR, for 12.87%;
- Individual members of management, for 1.41%.

As of December 31, 2024, SID had invoiced a total of €300,000 in fees under the Assistance Agreement (€300,000 as of December 31, 2023).

As of December 31, 2024, Tarkett had invoiced a total of €55,000 to SID for services (€55,000 as of December 31, 2023).

10.3 Members of the Management Board and Supervisory Board

None.

Note 11 > Subsequent events

Acquisition in January 2025 of two companies Anchor Management Group LLC and Mid Atlantic Sports Construction LLC in North America in the Sports Surfaces division.

Note 12 > Statutory auditor fees

Amount *(excluding taxes) (in thousands of euros)*	KPMG S.A.	KPMG S.A.	MAZARS	MAZARS
	Auditor	**Network**	**Auditor**	**Network**
Statutory audit, certification, audit of the individual company and Consolidated Financial Statements				
Tarkett	313	-	303	-
Controlled entities	140	1,010	63	912
Subtotal (A)	**453**	**1,010**	**366**	**912**
Certification, audit of the Sustainibility report				
Tarkett	174	-	131	-
Controlled entities	-	-	-	-
Subtotal (B)	**174**	**-**	**131**	**-**
Services other than certification of the financial statements and sustainibility report required by laws and regulations				
Tarkett	-	-	-	-
Controlled entities	-	-	-	-
Subtotal (C)	**-**	**-**	**-**	**-**
Services other than certification of the financial statements at the entity's request				
Tarkett	-	-	-	-
Controlled entities	2	56	-	7
Subtotal (D)	**2**	**56**	**-**	**7**
Services other than certification of the financial statements [1]				
Subtotal E = C + D	**2**	**56**	**-**	**-**
Subtotal F = A + D	**629**	**1,066**	**497**	**919**
Total	**1,695**		**1,416**	

[1] *Nature of services other than certification of the financial statements and related to the sustainibility report rendered by the statutory auditor to consolidated entity and controlled entities : contractual audit, tax compliance*

Note 13 > Principal consolidated entities

Companies	Country	Consolidation method	Pourcentage of interest as of December 31, 2024	Pourcentage of interest as of December 31, 2023
G: Full consolidation				
E: Equity method				
EMEA				
Tarkett AB	Sweden	G	100%	100%
Tarkett AS	Norway	G	100%	100%
Tarkett OY	Finland	G	100%	100%
Tarkett A/S	Danemark	G	100%	100%
Tarkett Polska Sp.z.o.o.	Polska	G	100%	100%
Tarkett Aspen Zemin AS	Turkey	G	100%	100%
Laminate Park GmbH & Co KG	Germany	E	50%	50%
Virtual Empathy Platform Ltd	United Kingdom	E	33%	33%
Tarkett Holding GmbH	Germany	G	100%	100%
Tarkett SA	France	Parent company	100%	100%
Tarkett Services	France	G	100%	100%
Tarkett GDL SA	Luxembourg	G	100%	100%
Tarkett Capital SA	Luxembourg	G	100%	100%
Tarkett SpA	Italy	G	100%	100%
Tarkett - Produtos Internacionias, SA	Portugal	G	100%	100%
Tarkett Monoprosopi Ltd.	Greece	G	100%	100%
Tarkett Floors S.A. Spain	Spain	G	100%	100%
Tarkett France	France	G	100%	100%
Tarkett Bois SAS	France	G	100%	100%
Fieldturf Tarkett SAS	France	G	100%	100%
Tarkett Sports GmbH	Germany	G	100%	100%
Fieldturf Poligras SA	Spain	G	100%	100%
Morton Extrusiontechnik GmbH	Germany	G	100%	100%
Allsports construction and maintenance Ltd.	United Kingdom	E	30%	30%
Desso Holding BV	Netherlands	G	100%	100%
Desso BV	Netherlands	G	100%	100%
Desso Refinity BV	Netherlands	G	100%	100%
Tarkett Sports BV	Netherlands	G	100%	100%
Tarkett NV	Belgium	G	100%	100%
Tarkett AG Switzerland	Switzerland	G	100%	100%
Desso Sports System BV	Netherlands	G	100%	100%
Desso Sport Systems NV	Belgium	G	100%	100%
M-Wall holding BV	Netherlands	G	51%	51%
M-Wall BV	Netherlands	G	51%	51%
M-Projectservice BV	Netherlands	G	51%	51%
Tarkett Ltd.	United Kingdom	G	100%	100%
Somalré	Luxembourg	G	100%	100%
F.E.D. Inc.	United States of America	E	40%	40%
Wildcat Enterprise for Textile Industries	United Arab Emirates	G	100%	100%
Amérique du Nord				
Tarkett, Inc. (Delaware)	United States of America	G	100%	100%
Tarkett Inc.	Canada	G	100%	100%
Desso Inc.	United States of America	G	100%	100%
Tandus Centiva Limited	Canada	G	100%	100%
Lexmark Carpet Mills	United States of America	G	100%	100%
Tarkett Manufacturing Mexico	Mexico	G	100%	100%
Domco Products Texas Inc	United States of America	G	100%	100%
Tarkett Alabama Inc.	United States of America	G	100%	100%

Companies	Country	Consolidation method	Pourcentage of interest as of December 31, 2024	Pourcentage of interest as of December 31, 2023
Tarkett Finance Inc.	United States of America	G	100%	100%
Tarkett USA Inc.	United States of America	G	100%	100%
Fieldturf Inc.	Canada	G	100%	100%
L.E.R. Inc.	United States of America	G	100%	100%
EasyTurf Inc.	United States of America	G	100%	100%
Beynon Sport Surfaces Inc.	United States of America	G	100%	100%
FieldTurf Tarkett USA Holdings, Inc.	United States of America	G	100%	100%
Fieldturf USA Inc.	United States of America	G	100%	100%
Johnsonite Canada Inc.	Canada	G	100%	100%
Diamond W Supply Co.	United States of America	G	100%	100%
Tarkett Carpet Canada Inc.	Canada	G	100%	100%
Dynamic Base Construction, LLC	United States of America	G	49%	49%
Tarkett Sports Midwest Inc.	United States of America	G	100%	100%
Midwest Specialty Contractors Inc.	United States of America	G	100%	100%
Classic Turf & Tracks [1]	United States of America	G	100%	
Benchmark Contracting [1]	United States of America	G	100%	
Precision Construction & Contracting [1]	United States of America	G	100%	
CEI, APAC et Amérique latine				
Tarkett Australia Pty.Ltd.	Australia	G	100%	100%
Tarkett Brasil Revestimentos LTDA	Brazil	G	100%	100%
Tarkett Flooring Mexico S.R.L.	Mexico	G	100%	100%
Tarkett Argentina	Argentina	G	100%	100%
Tarkett Japan [1]	Japan	G	100%	
Tarkett Hong Kong Ltd.	Hong Kong	G	100%	100%
Tarkett Asia Pacific (Shanghai) Management Co Ltd.	China	G	100%	100%
Tarkett Industrial (Beijing) Co, Ltd	China	G	100%	100%
AO Tarkett	Russia	G	100%	100%
AO Tarkett Rus	Russia	G	100%	100%
Tarkett Sommer OOO	Russia	G	100%	100%
Tarkett d.o.o.	Serbia	G	100%	100%
Tarkett SEE d.o.o.	Serbia	G	100%	100%
Tarkett UA DP	Ukraine	G	100%	100%
Tarkett KAZ TOO	Kazakhstan	G	100%	100%
Tarkett Bel UE	Belarus	G	100%	100%
Galerija Podova d.o.o.	Serbia	G	100%	100%
Tarkett Vinisin TOV	Ukraine	G	100%	100%
Tarkett Flooring Singapore Pte. Ltd	Singapour	G	100%	100%
Tandus Flooring (Suzhou) Co. Ltd	China	G	100%	100%
Tarkett Flooring India Private Ltd	India	G	100%	100%
Fieldturf Tarkett Australia	Australia	G	100%	100%

[1] *cf. Note 2.4.*

The percentages of equity and voting rights held for each entity of the Group are identical.

3 Statutory Auditors' Report on the Consolidated Financial Statements

KPMG SA
Tour EQHO
2 Avenue Gambetta
CS 60055
92066 Paris La Défense Cedex

Forvis Mazars
61, rue Henri Regnault
92075 Paris La Défense

Tarkett

Statutory auditors' report on the consolidated financial statements

For the year ended 31 December 2024
Tarkett
Tour Initiale – 1 Terrasse Bellini – 92919 Paris La Défense

KPMG S.A., société d'expertise comptable et de commissaires aux comptes inscrite au Tableau de l'Ordre des experts comptables de Paris sous le n° 143008010101 et rattachée à la Compagnie régionale des commissaires aux comptes de Versailles et du Centre.
Société française membre du réseau KPMG constitué de cabinets indépendants affiliés à KPMG International Limited, une société de droit anglais (private company limited by guarantee).

Société anonyme à conseil d'administration
Siège social :
Tour EQHO
2 avenue Gambetta
CS 60055
92066 Paris La Défense Cedex
Capital social : 5 497 100 €
775 726 417 RCS Nanterre

FORVIS MAZARS SA
SA d'expertise comptable et de commissariat aux comptes a directoire et conseil de surveillance.
SA au capital de : 8 320 000 euros – RCS : Nanterre 784 824 153
SIRET : 784 824 153 00 232
APE : 6920Z
Siège social : Tour Exaltis, 61 rue Henry Regnault La Défense 92400 Courbevoie

KPMG SA
Tour EQHO
2 Avenue Gambetta
CS 60055
92066 Paris La Défense Cedex

Forvis Mazars
61, rue Henri Regnault
92075 Paris La Défense

This is a translation into English of the statutory auditors' report on the consolidated financial statements of the Company issued in French and it is provided solely for the convenience of English speaking users.
This statutory auditors' report includes information required by European regulation and French law, such as information about the appointment of the statutory auditors or verification of the management report and other documents provided to shareholders.
This report should be read in conjunction with, and construed in accordance with, French law and professional auditing standards applicable in France.

Tarkett

Tour Initiale - 1 Terrasse Bellini - 92919 Paris La Défense

Statutory auditors' report on the consolidated financial statements

For the year ended 31 December 2024

To the general meeting of shareholders of Tarkett

Opinion

In compliance with the engagement entrusted to us by your annual general meeting, we have audited the accompanying consolidated financial statements of Tarkett for the year ended 31 December 2024.

In our opinion, the consolidated financial statements give a true and fair view of the assets and liabilities and of the financial position of the Group as at 31 December 2024 and of the results of its operations for the year then ended in accordance with International Financial Reporting Standards as adopted by the European Union.

The audit opinion expressed above is consistent with our report to the Audit, Risks and Compliance Committee.

Basis for Opinion

Audit Framework

We conducted our audit in accordance with professional standards applicable in France. We believe that the audit evidence we have obtained is sufficient and appropriate to provide a basis for our opinion.

Our responsibilities under those standards are further described in the "Statutory Auditors' Responsibilities for the Audit of the Consolidated Financial Statements" section of our report.

KPMG S.A., société d'expertise comptable et de commissaires aux comptes inscrite au Tableau de l'Ordre des experts comptables de Paris sous le n° 143008010101 et rattachée à la Compagnie régionale des commissaires aux comptes de Versailles et du Centre.
Société française membre du réseau KPMG constitué de cabinets indépendants affiliés à KPMG International Limited, une société de droit anglais (private company limited by guarantee).

Société anonyme à conseil d'administration
Siège social :
Tour EQHO
2 avenue Gambetta
CS 60055
92066 Paris La Défense Cedex
Capital social : 5 497 100 €
775 726 417 RCS Nanterre

FORVIS MAZARS SA
SA d'expertise comptable et de commissariat aux comptes a directoire et conseil de surveillance.
SA au capital de : 8 320 000 euros – RCS : Nanterre 784 824 153
SIRET : 784 824 153 00 232
APE : 6920Z
Siège social : Tour Exaltis, 61 rue Henry Regnault
La Défense 92400 Courbevoie

Independence

We conducted our audit engagement in compliance with independence requirements of the French Commercial Code (code de commerce) and the French Code of Ethics (code de déontologie) for statutory auditors for the period from 1st January 2024 to the date of our report and specifically we did not provide any prohibited non-audit services referred to in Article 5(1) of Regulation (EU) No 537/2014.

Justification of Assessments - Key Audit Matters

In accordance with the requirements of Articles L.821-53 and R.821-180 of the French Commercial Code (code de commerce) relating to the justification of our assessments, we inform you of the key audit matters relating to risks of material misstatement that, in our professional judgment, were of most significance in our audit of the consolidated financial statements of the current period, as well as how we addressed those risks.

These matters were addressed in the context of our audit of the consolidated financial statements as a whole, and in forming our opinion thereon, and we do not provide a separate opinion on specific items of the consolidated financial statements.

Long term assets valuation

Key audit matter

Goodwill, intangible assets and property, plant and equipment have net book values at 31 December 2024 of 629.7M€, 51.8M€ and 538.3M€, respectively, and represent a significant amount of the consolidated balance sheet. These assets are accounted in accordance with the principles described in notes "2.2 - Business Combinations", "5.1 – Goodwill" and "5.2 - Tangible and intangible assets" to the consolidated financial statements.

These assets may present a risk of impairment caused by internal or external factors, such as the deterioration of the Group's performance, changes in the competitive environment, unfavorable market conditions and changes in legislation or regulations, including those inherent to climate change considerations. These changes can have an impact on the Group's cash flow forecasts and consequently on the determination of the recoverable amounts of these assets.

Management performs impairment tests if there is an impairment trigger event and at least once a year for goodwill and other non-amortizable intangible assets or for other non-financial assets as described in note "5.3.1 - Non-Financial Assets" to the consolidated financial statements. Assets are tested at the level of the cash-generating units ("CGUs") defined by the Group. An impairment loss is recognized if the net booked value of an asset or cash-generating unit is higher than its recoverable value. The recoverable value is the higher amount between the fair value less the transfer costs and the value in use. Value in use is determined according to the discounted future cash flow projections method (excluding interest on borrowings and taxes) for each cash generating unit.

The assessment of the recoverable value of these assets is a key audit matter, given the significant potential of impairment and the high degree of estimation and judgment required by management for this assessment. The judgments include, in particular, assumptions regarding the future evolution of selling prices, volumes and costs of raw materials, renewal investments and changes in working capital requirements related to the operation of these assets, and the determination of infinite growth rates and discount rates applied to the appropriate future cash flows.

Audit approach

We reviewed the impairment testing process implemented by Group management, in order to identify trigger events and conduct to impairment testing, on the base of cash-flow forecasts from the budget and business plan established by the Board of Management and presented to the Supervisory Board, and assessed the permanence of the method used.

We also assessed appropriateness and relevance of Group management's approach to determine the cash-generating units and units mergers for long-term assets' testing.

We adapted our audit approach when impairment triggers events occur on such cash-generating units. Concerning value in use, we verified the consistency of cash flow projections with comparison to the latest management assumptions presented as part of the budget process.

With the help of our valuation experts, we reviewed Group management's key assumptions related to the discount rates, comparing them with external market data and other comparable sectors' companies.

For a selection of CGUs, we assessed the reasonableness of future cash flow projections, including the infinity normative terminal cash flow amount, with respect to the economic and financial context in which these units operate, and past achievements, our knowledge of business activity supported by interviews with Group or division managers and, according to their availability, external data of other comparable sectors' companies.We analyzed the sensitivity of the impairment test to assess the materiality of the potential impacts on the recoverable value of the assets bearing the highest risk.

Finally, we verified that the notes "2.2 - Business combinations", "5.1 - Goodwill", "5.2 - Intangible and tangible fixed assets" and "5.3.1 - Non-financial assets" to the consolidated financial statements provide an appropriate information.

Litigations and provisions

Key audit matter

The Group is exposed to a variety of legal and tax risks, as well as cases of litigation, including asbestos claims in the United States.

As indicated in note "6.1 – Provisions" to the consolidated financial statements, these risks and litigations are covered by provisions established in accordance with the applicable accounting standard (IAS 37 " Provisions, Contingent Liabilities and Contingent Assets") and amount to 83,4M€ at 31 December 2024 including essentially asbestos litigations.

Significant contingent liabilities for these risks and litigations, the amount and timing of which can not be reliably estimated, are described in note "6.2 - Contingent liabilities" to the consolidated financial statements.

The identification of risks and litigations, the valuation of provisions for such risks and litigations constitute a key audit matter given the amounts involved and the high degree estimate and judgment required from management.

Audit approach

In order to obtain an understanding of litigations, contingent liabilities and related valuations, we reviewed the process of identification, qualification and valuation implemented by Group management for such provisions through various interviews with Group's legal and finance departments, divisions and main subsidiaries.

We conducted a critical review of the internal analysis notes for the likelihood and potential impact of each risk, examining the available procedural elements (letters, claims, judgments, notifications, etc.).

We obtained direct confirmations from the main lawyers involved to confirm our understanding of risks and litigations and assessed the relevance of the amount of provisions accrued.

Based on historical data used by the Group to estimate its provisions for asbestos claims:

- We assessed the permanence of methods used, the relevance and reliability of underlying data and calculations applied;
- We compared amounts paid to previously recognized provisions to assess the quality of the management estimates.

We exercised our professional judgment to assess, in particular, wether the positions held by Management are in the acceptable range ok risk assessment and the validity of the evolution over time of such positions.

Finally, we verified that the notes "6.1 - Provisions" and "6.2 – Contingent liabilities" to the consolidated financial statements provide an appropriate information.

Specific Verifications

We have also performed, in accordance with professional standards applicable in France, the specific verifications required by laws and regulations of the Group's information given in the management report of the Board of Directors.

We have no matters to report as to its fair presentation and its consistency with the consolidated financial statements.

Report on Other Legal and Regulatory Requirements

Format of presentation of the consolidated financial statements intended to be included in the annual financial report

We have also verified, in accordance with the professional standard applicable in France relating to the procedures performed by the statutory auditor relating to the annual and consolidated financial statements presented in the European single electronic format, that the presentation of the consolidated financial statements intended to be included in the annual financial report mentioned in Article L.451-1-2, I of the French Monetary and Financial Code (code monétaire et financier), prepared unde the responsibility of the Board of Directors, complies with the single electronic format defined in the European Delegated Regulation N° 2019/815 of 17 Decembre 2018. As it relates to consolidated financial statements, our work includes verifying that the tagging of these consolidated financial statements complies with the format defined in the above delegated regulation.

Based on the work we have performed, we conclude that the presentation of the consolidated financial statements intended to be included in the annual financial report complies, in all material respects, with the European single electronic format.

We have no responsibility to verify that the consolidated financial statements that will ultimately be included by your company in the annual financial report filed with the AMF are in agreement with those on which we have performed our work.

Appointment of the Statutory Auditors

We were appointed as statutory auditors of Tarkett by the combined annual general meeting held on 30 April 2020 for KPMG and Mazars.

As at 31 December 2024, KPMG and Mazars were in the 11th year of uninterrupted engagement since securities of the Company were admitted to trading on a regulated market.

Responsibilities of Management and Those Charged with Governance for the Consolidated Financial Statements

Management is responsible for the preparation and fair presentation of the consolidated financial statements in accordance with International Financial Reporting Standards as adopted by the European Union and for such internal control as management determines is necessary to enable the preparation of consolidated financial statements that are free from material misstatement, whether due to fraud or error.

In preparing the consolidated financial statements, management is responsible for assessing the Company's ability to continue as a going concern, disclosing, as applicable, matters related to going concern and using the going concern basis of accounting unless it is expected to liquidate the Company or to cease operations.

The Audit, Risks and Compliance Committee is responsible for monitoring the financial reporting process and the effectiveness of internal control and risks management systems and where applicable, its internal audit, regarding the accounting and financial reporting procedures.

The consolidated financial statements were approved by the Board of Directors.

Statutory Auditors' Responsibilities for the Audit of the Consolidated Financial Statements

Objectives and audit approach

Our role is to issue a report on the consolidated financial statements. Our objective is to obtain reasonable assurance about whether the consolidated financial statements as a whole are free from material misstatement. Reasonable assurance is a high level of assurance, but is not a guarantee that an audit conducted in accordance with professional standards will always detect a material misstatement when it exists. Misstatements can arise from fraud or error and are considered material if, individually or in the aggregate, they could reasonably be expected to influence the economic decisions of users taken on the basis of these consolidated financial statements.

As specified in Article L.823-10-1 of the French Commercial Code (code de commerce), our statutory audit does not include assurance on the viability of the Company or the quality of management of the affairs of the Company.

As part of an audit conducted in accordance with professional standards applicable in France, the statutory auditor exercises professional judgment throughout the audit and furthermore:

- Identifies and assesses the risks of material misstatement of the consolidated financial statements, whether due to fraud or error, designs and performs audit procedures responsive to those risks, and obtains audit evidence considered to be sufficient and appropriate to provide a basis for his opinion. The risk of not detecting a material misstatement resulting from fraud is higher than for one resulting from error, as fraud may involve collusion, forgery, intentional omissions, misrepresentations, or the override of internal control.

- Obtains an understanding of internal control relevant to the audit in order to design audit procedures that are appropriate in the circumstances, but not for the purpose of expressing an opinion on the effectiveness of the internal control.

- Evaluates the appropriateness of accounting policies used and the reasonableness of accounting estimates and related disclosures made by management in the consolidated financial statements.

Assesses the appropriateness of management's use of the going concern basis of accounting and, based on the audit evidence obtained, whether a material uncertainty exists related to events or conditions that may cast significant doubt on the Company's ability to continue as a going concern. This assessment is based on the audit evidence obtained up to the date of his audit report. However, future events or conditions may cause the Company to cease to continue as a going concern. If the statutory auditor concludes that a material uncertainty exists, there is a requirement to draw attention in the audit report to the related disclosures in the consolidated financial statements or, if such disclosures are not provided or inadequate, to modify the opinion expressed therein.

- Evaluates the overall presentation of the consolidated financial statements and assesses whether these statements represent the underlying transactions and events in a manner that achieves fair presentation.

- Obtains sufficient appropriate audit evidence regarding the financial information of the entities or business activities within the Group to express an opinion on the consolidated financial statements. The statutory auditor is responsible for the direction, supervision and performance of the audit of the consolidated financial statements and for the opinion expressed on these consolidated financial statements.

Report to the Audit, Risks and Compliance Committee

We submit to the Audit, Risks and Compliance Committee a report which includes in particular a description of the scope of the audit and the audit program implemented, as well as the results of our audit. We also report, if any, significant deficiencies in internal control regarding the accounting and financial reporting procedures that we have identified.

Our report to the Audit, Risks and Compliance Committee includes the risks of material misstatement that, in our professional judgment, were of most significance in the audit of the consolidated financial statements of the current period and which are therefore the key audit matters, that we are required to describe in this audit report.

We also provide the Audit, Risks and Compliance Committee with the declaration provided for in Article 6 of Regulation (EU) N° 537/2014, confirming our independence within the meaning of the rules applicable in France such as they are set in particular by Articles L.822-10 to L.822-14 of the French Commercial Code (code de commerce) and in the French Code of Ethics *(code de déontologie)* for statutory auditors. Where appropriate, we discuss with the Audit, Risks and Compliance Committee the risks that may reasonably be thought to bear on our independence, and the related safeguards.

Paris La Défense, 27 February 2025

The statutory auditors

French original signed by

KPMG SA		Forvis Mazars
Philippe Grandclerc *Partner*	Romain Mercier *Partner*	Anne-Laure Rousselou *Partner*

Design and Production

POMELO
PARADIGM

pomelo-paradigm.com/pomdocpro/

Form **W-9**
(Rev. March 2024)
Department of the Treasury
Internal Revenue Service

Request for Taxpayer Identification Number and Certification

Go to *www.irs.gov/FormW9* for instructions and the latest information.

Give form to the requester. Do not send to the IRS.

Before you begin. For guidance related to the purpose of Form W-9, see *Purpose of Form*, below.

Print or type. See ***Specific Instructions*** on page 3.

1 Name of entity/individual. An entry is required. (For a sole proprietor or disregarded entity, enter the owner's name on line 1, and enter the business/disregarded entity's name on line 2.)

FIELDTURF USA, INC.

2 Business name/disregarded entity name, if different from above.

3a Check the appropriate box for federal tax classification of the entity/individual whose name is entered on line 1. Check only **one** of the following seven boxes.

☐ Individual/sole proprietor ☑ C corporation ☐ S corporation ☐ Partnership ☐ Trust/estate

☐ LLC. Enter the tax classification (C = C corporation, S = S corporation, P = Partnership) . . . .

Note: Check the "LLC" box above and, in the entry space, enter the appropriate code (C, S, or P) for the tax classification of the LLC, unless it is a disregarded entity. A disregarded entity should instead check the appropriate box for the tax classification of its owner.

☐ Other (see instructions)

4 Exemptions (codes apply only to certain entities, not individuals; see instructions on page 3):

Exempt payee code (if any)

Exemption from Foreign Account Tax Compliance Act (FATCA) reporting code (if any)

(Applies to accounts maintained outside the United States.)

3b If on line 3a you checked "Partnership" or "Trust/estate," or checked "LLC" and entered "P" as its tax classification, and you are providing this form to a partnership, trust, or estate in which you have an ownership interest, check this box if you have any foreign partners, owners, or beneficiaries. See instructions . . . . . ☐

5 Address (number, street, and apt. or suite no.). See instructions.

175 N. Industrial Blvd NE

Requester's name and address (optional)

6 City, state, and ZIP code

Calhoun, GA 30701

7 List account number(s) here (optional)

Part I Taxpayer Identification Number (TIN)

Enter your TIN in the appropriate box. The TIN provided must match the name given on line 1 to avoid backup withholding. For individuals, this is generally your social security number (SSN). However, for a resident alien, sole proprietor, or disregarded entity, see the instructions for Part I, later. For other entities, it is your employer identification number (EIN). If you do not have a number, see *How to get a TIN*, later.

Note: If the account is in more than one name, see the instructions for line 1. See also *What Name and Number To Give the Requester* for guidelines on whose number to enter.

Social security number

☐☐☐ - ☐☐ - ☐☐☐☐

or

Employer identification number

58 - 2330410

Part II Certification

Under penalties of perjury, I certify that:

1. The number shown on this form is my correct taxpayer identification number (or I am waiting for a number to be issued to me); and
2. I am not subject to backup withholding because (a) I am exempt from backup withholding, or (b) I have not been notified by the Internal Revenue Service (IRS) that I am subject to backup withholding as a result of a failure to report all interest or dividends, or (c) the IRS has notified me that I am no longer subject to backup withholding; and
3. I am a U.S. citizen or other U.S. person (defined below); and
4. The FATCA code(s) entered on this form (if any) indicating that I am exempt from FATCA reporting is correct.

Certification instructions. You must cross out item 2 above if you have been notified by the IRS that you are currently subject to backup withholding because you have failed to report all interest and dividends on your tax return. For real estate transactions, item 2 does not apply. For mortgage interest paid, acquisition or abandonment of secured property, cancellation of debt, contributions to an individual retirement arrangement (IRA), and, generally, payments other than interest and dividends, you are not required to sign the certification, but you must provide your correct TIN. See the instructions for Part II, later.

Sign Here **Signature of U.S. person** **Date** JANUARY 7, 2025

General Instructions

Section references are to the Internal Revenue Code unless otherwise noted.

Future developments. For the latest information about developments related to Form W-9 and its instructions, such as legislation enacted after they were published, go to *www.irs.gov/FormW9*.

What's New

Line 3a has been modified to clarify how a disregarded entity completes this line. An LLC that is a disregarded entity should check the appropriate box for the tax classification of its owner. Otherwise, it should check the "LLC" box and enter its appropriate tax classification.

New line 3b has been added to this form. A flow-through entity is required to complete this line to indicate that it has direct or indirect foreign partners, owners, or beneficiaries when it provides the Form W-9 to another flow-through entity in which it has an ownership interest. This change is intended to provide a flow-through entity with information regarding the status of its indirect foreign partners, owners, or beneficiaries, so that it can satisfy any applicable reporting requirements. For example, a partnership that has any indirect foreign partners may be required to complete Schedules K-2 and K-3. See the Partnership Instructions for Schedules K-2 and K-3 (Form 1065).

Purpose of Form

An individual or entity (Form W-9 requester) who is required to file an information return with the IRS is giving you this form because they

must obtain your correct taxpayer identification number (TIN), which may be your social security number (SSN), individual taxpayer identification number (ITIN), adoption taxpayer identification number (ATIN), or employer identification number (EIN), to report on an information return the amount paid to you, or other amount reportable on an information return. Examples of information returns include, but are not limited to, the following.

• Form 1099-INT (interest earned or paid).

• Form 1099-DIV (dividends, including those from stocks or mutual funds).

• Form 1099-MISC (various types of income, prizes, awards, or gross proceeds).

• Form 1099-NEC (nonemployee compensation).

• Form 1099-B (stock or mutual fund sales and certain other transactions by brokers).

• Form 1099-S (proceeds from real estate transactions).

• Form 1099-K (merchant card and third-party network transactions).

• Form 1098 (home mortgage interest), 1098-E (student loan interest), and 1098-T (tuition).

• Form 1099-C (canceled debt).

• Form 1099-A (acquisition or abandonment of secured property).

Use Form W-9 only if you are a U.S. person (including a resident alien), to provide your correct TIN.

Caution: If you don't return Form W-9 to the requester with a TIN, you might be subject to backup withholding. See *What is backup withholding*, later.

By signing the filled-out form, you:

1. Certify that the TIN you are giving is correct (or you are waiting for a number to be issued);

2. Certify that you are not subject to backup withholding; or

3. Claim exemption from backup withholding if you are a U.S. exempt payee; and

4. Certify to your non-foreign status for purposes of withholding under chapter 3 or 4 of the Code (if applicable); and

5. Certify that FATCA code(s) entered on this form (if any) indicating that you are exempt from the FATCA reporting is correct. See *What Is FATCA Reporting*, later, for further information.

Note: If you are a U.S. person and a requester gives you a form other than Form W-9 to request your TIN, you must use the requester's form if it is substantially similar to this Form W-9.

Definition of a U.S. person. For federal tax purposes, you are considered a U.S. person if you are:

• An individual who is a U.S. citizen or U.S. resident alien;

• A partnership, corporation, company, or association created or organized in the United States or under the laws of the United States;

• An estate (other than a foreign estate); or

• A domestic trust (as defined in Regulations section 301.7701-7).

Establishing U.S. status for purposes of chapter 3 and chapter 4 withholding. Payments made to foreign persons, including certain distributions, allocations of income, or transfers of sales proceeds, may be subject to withholding under chapter 3 or chapter 4 of the Code (sections 1441–1474). Under those rules, if a Form W-9 or other certification of non-foreign status has not been received, a withholding agent, transferee, or partnership (payor) generally applies presumption rules that may require the payor to withhold applicable tax from the recipient, owner, transferor, or partner (payee). See Pub. 515, Withholding of Tax on Nonresident Aliens and Foreign Entities.

The following persons must provide Form W-9 to the payor for purposes of establishing its non-foreign status.

• In the case of a disregarded entity with a U.S. owner, the U.S. owner of the disregarded entity and not the disregarded entity.

• In the case of a grantor trust with a U.S. grantor or other U.S. owner, generally, the U.S. grantor or other U.S. owner of the grantor trust and not the grantor trust.

• In the case of a U.S. trust (other than a grantor trust), the U.S. trust and not the beneficiaries of the trust.

See Pub. 515 for more information on providing a Form W-9 or a certification of non-foreign status to avoid withholding.

Foreign person. If you are a foreign person or the U.S. branch of a foreign bank that has elected to be treated as a U.S. person (under Regulations section 1.1441-1(b)(2)(iv) or other applicable section for chapter 3 or 4 purposes), do not use Form W-9. Instead, use the appropriate Form W-8 or Form 8233 (see Pub. 515). If you are a qualified foreign pension fund under Regulations section 1.897(l)-1(d), or a partnership that is wholly owned by qualified foreign pension funds, that is treated as a non-foreign person for purposes of section 1445 withholding, do not use Form W-9. Instead, use Form W-8EXP (or other certification of non-foreign status).

Nonresident alien who becomes a resident alien. Generally, only a nonresident alien individual may use the terms of a tax treaty to reduce or eliminate U.S. tax on certain types of income. However, most tax treaties contain a provision known as a saving clause. Exceptions specified in the saving clause may permit an exemption from tax to continue for certain types of income even after the payee has otherwise become a U.S. resident alien for tax purposes.

If you are a U.S. resident alien who is relying on an exception contained in the saving clause of a tax treaty to claim an exemption from U.S. tax on certain types of income, you must attach a statement to Form W-9 that specifies the following five items.

1. The treaty country. Generally, this must be the same treaty under which you claimed exemption from tax as a nonresident alien.

2. The treaty article addressing the income.

3. The article number (or location) in the tax treaty that contains the saving clause and its exceptions.

4. The type and amount of income that qualifies for the exemption from tax.

5. Sufficient facts to justify the exemption from tax under the terms of the treaty article.

Example. Article 20 of the U.S.-China income tax treaty allows an exemption from tax for scholarship income received by a Chinese student temporarily present in the United States. Under U.S. law, this student will become a resident alien for tax purposes if their stay in the United States exceeds 5 calendar years. However, paragraph 2 of the first Protocol to the U.S.-China treaty (dated April 30, 1984) allows the provisions of Article 20 to continue to apply even after the Chinese student becomes a resident alien of the United States. A Chinese student who qualifies for this exception (under paragraph 2 of the first Protocol) and is relying on this exception to claim an exemption from tax on their scholarship or fellowship income would attach to Form W-9 a statement that includes the information described above to support that exemption.

If you are a nonresident alien or a foreign entity, give the requester the appropriate completed Form W-8 or Form 8233.

Backup Withholding

What is backup withholding? Persons making certain payments to you must under certain conditions withhold and pay to the IRS 24% of such payments. This is called "backup withholding." Payments that may be subject to backup withholding include, but are not limited to, interest, tax-exempt interest, dividends, broker and barter exchange transactions, rents, royalties, nonemployee pay, payments made in settlement of payment card and third-party network transactions, and certain payments from fishing boat operators. Real estate transactions are not subject to backup withholding.

You will not be subject to backup withholding on payments you receive if you give the requester your correct TIN, make the proper certifications, and report all your taxable interest and dividends on your tax return.

Payments you receive will be subject to backup withholding if:

1. You do not furnish your TIN to the requester;

2. You do not certify your TIN when required (see the instructions for Part II for details);

3. The IRS tells the requester that you furnished an incorrect TIN;

4. The IRS tells you that you are subject to backup withholding because you did not report all your interest and dividends on your tax return (for reportable interest and dividends only); or

5. You do not certify to the requester that you are not subject to backup withholding, as described in item 4 under "*By signing the filled-out form*" above (for reportable interest and dividend accounts opened after 1983 only).

Certain payees and payments are exempt from backup withholding. See *Exempt payee code*, later, and the separate Instructions for the Requester of Form W-9 for more information.

See also *Establishing U.S. status for purposes of chapter 3 and chapter 4 withholding*, earlier.

What Is FATCA Reporting?

The Foreign Account Tax Compliance Act (FATCA) requires a participating foreign financial institution to report all U.S. account holders that are specified U.S. persons. Certain payees are exempt from FATCA reporting. See *Exemption from FATCA reporting code*, later, and the Instructions for the Requester of Form W-9 for more information.

Updating Your Information

You must provide updated information to any person to whom you claimed to be an exempt payee if you are no longer an exempt payee and anticipate receiving reportable payments in the future from this person. For example, you may need to provide updated information if you are a C corporation that elects to be an S corporation, or if you are no longer tax exempt. In addition, you must furnish a new Form W-9 if the name or TIN changes for the account, for example, if the grantor of a grantor trust dies.

Penalties

Failure to furnish TIN. If you fail to furnish your correct TIN to a requester, you are subject to a penalty of $50 for each such failure unless your failure is due to reasonable cause and not to willful neglect.

Civil penalty for false information with respect to withholding. If you make a false statement with no reasonable basis that results in no backup withholding, you are subject to a $500 penalty.

Criminal penalty for falsifying information. Willfully falsifying certifications or affirmations may subject you to criminal penalties including fines and/or imprisonment.

Misuse of TINs. If the requester discloses or uses TINs in violation of federal law, the requester may be subject to civil and criminal penalties.

Specific Instructions

Line 1

You must enter one of the following on this line; **do not** leave this line blank. The name should match the name on your tax return.

If this Form W-9 is for a joint account (other than an account maintained by a foreign financial institution (FFI)), list first, and then circle, the name of the person or entity whose number you entered in Part I of Form W-9. If you are providing Form W-9 to an FFI to document a joint account, each holder of the account that is a U.S. person must provide a Form W-9.

• **Individual.** Generally, enter the name shown on your tax return. If you have changed your last name without informing the Social Security Administration (SSA) of the name change, enter your first name, the last name as shown on your social security card, and your new last name.

Note for ITIN applicant: Enter your individual name as it was entered on your Form W-7 application, line 1a. This should also be the same as the name you entered on the Form 1040 you filed with your application.

• **Sole proprietor.** Enter your individual name as shown on your Form 1040 on line 1. Enter your business, trade, or "doing business as" (DBA) name on line 2.

• **Partnership, C corporation, S corporation, or LLC, other than a disregarded entity.** Enter the entity's name as shown on the entity's tax return on line 1 and any business, trade, or DBA name on line 2.

• **Other entities.** Enter your name as shown on required U.S. federal tax documents on line 1. This name should match the name shown on the charter or other legal document creating the entity. Enter any business, trade, or DBA name on line 2.

• **Disregarded entity.** In general, a business entity that has a single owner, including an LLC, and is not a corporation, is disregarded as an entity separate from its owner (a disregarded entity). See Regulations section 301.7701-2(c)(2). A disregarded entity should check the appropriate box for the tax classification of its owner. Enter the owner's name on line 1. The name of the owner entered on line 1 should never be a disregarded entity. The name on line 1 should be the name shown on the income tax return on which the income should be reported. For example, if a foreign LLC that is treated as a disregarded entity for U.S. federal tax purposes has a single owner that is a U.S. person, the U.S. owner's name is required to be provided on line 1. If the direct owner of the entity is also a disregarded entity, enter the first owner that is not disregarded for federal tax purposes. Enter the disregarded entity's name on line 2. If the owner of the disregarded entity is a foreign person, the owner must complete an appropriate Form W-8 instead of a Form W-9. This is the case even if the foreign person has a U.S. TIN.

Line 2

If you have a business name, trade name, DBA name, or disregarded entity name, enter it on line 2.

Line 3a

Check the appropriate box on line 3a for the U.S. federal tax classification of the person whose name is entered on line 1. Check only one box on line 3a.

IF the entity/individual on line 1 is a(n) . . .	THEN check the box for . . .
• Corporation	Corporation.
• Individual or • Sole proprietorship	Individual/sole proprietor.
• LLC classified as a partnership for U.S. federal tax purposes or • LLC that has filed Form 8832 or 2553 electing to be taxed as a corporation	Limited liability company and enter the appropriate tax classification: P = Partnership, C = C corporation, or S = S corporation.
• Partnership	Partnership.
• Trust/estate	Trust/estate.

Line 3b

Check this box if you are a partnership (including an LLC classified as a partnership for U.S. federal tax purposes), trust, or estate that has any foreign partners, owners, or beneficiaries, and you are providing this form to a partnership, trust, or estate, in which you have an ownership interest. You must check the box on line 3b if you receive a Form W-8 (or documentary evidence) from any partner, owner, or beneficiary establishing foreign status or if you receive a Form W-9 from any partner, owner, or beneficiary that has checked the box on line 3b.

Note: A partnership that provides a Form W-9 and checks box 3b may be required to complete Schedules K-2 and K-3 (Form 1065). For more information, see the Partnership Instructions for Schedules K-2 and K-3 (Form 1065).

If you are required to complete line 3b but fail to do so, you may not receive the information necessary to file a correct information return with the IRS or furnish a correct payee statement to your partners or beneficiaries. See, for example, sections 6698, 6722, and 6724 for penalties that may apply.

Line 4 Exemptions

If you are exempt from backup withholding and/or FATCA reporting, enter in the appropriate space on line 4 any code(s) that may apply to you.

Exempt payee code.

• Generally, individuals (including sole proprietors) are not exempt from backup withholding.

• Except as provided below, corporations are exempt from backup withholding for certain payments, including interest and dividends.

• Corporations are not exempt from backup withholding for payments made in settlement of payment card or third-party network transactions.

• Corporations are not exempt from backup withholding with respect to attorneys' fees or gross proceeds paid to attorneys, and corporations that provide medical or health care services are not exempt with respect to payments reportable on Form 1099-MISC.

The following codes identify payees that are exempt from backup withholding. Enter the appropriate code in the space on line 4.

1—An organization exempt from tax under section 501(a), any IRA, or a custodial account under section 403(b)(7) if the account satisfies the requirements of section 401(f)(2).

2—The United States or any of its agencies or instrumentalities.

3—A state, the District of Columbia, a U.S. commonwealth or territory, or any of their political subdivisions or instrumentalities.

4—A foreign government or any of its political subdivisions, agencies, or instrumentalities.

5—A corporation.

6—A dealer in securities or commodities required to register in the United States, the District of Columbia, or a U.S. commonwealth or territory.

7—A futures commission merchant registered with the Commodity Futures Trading Commission.

8—A real estate investment trust.

9—An entity registered at all times during the tax year under the Investment Company Act of 1940.

10—A common trust fund operated by a bank under section 584(a).

11—A financial institution as defined under section 581.

12—A middleman known in the investment community as a nominee or custodian.

13—A trust exempt from tax under section 664 or described in section 4947.

The following chart shows types of payments that may be exempt from backup withholding. The chart applies to the exempt payees listed above, 1 through 13.

IF the payment is for . . .	THEN the payment is exempt for . . .
• Interest and dividend payments	All exempt payees except for 7.
• Broker transactions	Exempt payees 1 through 4 and 6 through 11 and all C corporations. S corporations must not enter an exempt payee code because they are exempt only for sales of noncovered securities acquired prior to 2012.
• Barter exchange transactions and patronage dividends	Exempt payees 1 through 4.
• Payments over $600 required to be reported and direct sales over $5,000[1]	Generally, exempt payees 1 through 5.[2]
• Payments made in settlement of payment card or third-party network transactions	Exempt payees 1 through 4.

[1] See Form 1099-MISC, Miscellaneous Information, and its instructions.

[2] However, the following payments made to a corporation and reportable on Form 1099-MISC are not exempt from backup withholding: medical and health care payments, attorneys' fees, gross proceeds paid to an attorney reportable under section 6045(f), and payments for services paid by a federal executive agency.

Exemption from FATCA reporting code. The following codes identify payees that are exempt from reporting under FATCA. These codes apply to persons submitting this form for accounts maintained outside of the United States by certain foreign financial institutions. Therefore, if you are only submitting this form for an account you hold in the United States, you may leave this field blank. Consult with the person requesting this form if you are uncertain if the financial institution is subject to these requirements. A requester may indicate that a code is not required by providing you with a Form W-9 with "Not Applicable" (or any similar indication) entered on the line for a FATCA exemption code.

A—An organization exempt from tax under section 501(a) or any individual retirement plan as defined in section 7701(a)(37).

B—The United States or any of its agencies or instrumentalities.

C—A state, the District of Columbia, a U.S. commonwealth or territory, or any of their political subdivisions or instrumentalities.

D—A corporation the stock of which is regularly traded on one or more established securities markets, as described in Regulations section 1.1472-1(c)(1)(i).

E—A corporation that is a member of the same expanded affiliated group as a corporation described in Regulations section 1.1472-1(c)(1)(i).

F—A dealer in securities, commodities, or derivative financial instruments (including notional principal contracts, futures, forwards, and options) that is registered as such under the laws of the United States or any state.

G—A real estate investment trust.

H—A regulated investment company as defined in section 851 or an entity registered at all times during the tax year under the Investment Company Act of 1940.

I—A common trust fund as defined in section 584(a).

J—A bank as defined in section 581.

K—A broker.

L—A trust exempt from tax under section 664 or described in section 4947(a)(1).

M—A tax-exempt trust under a section 403(b) plan or section 457(g) plan.

Note: You may wish to consult with the financial institution requesting this form to determine whether the FATCA code and/or exempt payee code should be completed.

Line 5

Enter your address (number, street, and apartment or suite number). This is where the requester of this Form W-9 will mail your information returns. If this address differs from the one the requester already has on file, enter "NEW" at the top. If a new address is provided, there is still a chance the old address will be used until the payor changes your address in their records.

Line 6

Enter your city, state, and ZIP code.

Part I. Taxpayer Identification Number (TIN)

Enter your TIN in the appropriate box. If you are a resident alien and you do not have, and are not eligible to get, an SSN, your TIN is your IRS ITIN. Enter it in the entry space for the Social security number. If you do not have an ITIN, see *How to get a TIN* below.

If you are a sole proprietor and you have an EIN, you may enter either your SSN or EIN.

If you are a single-member LLC that is disregarded as an entity separate from its owner, enter the owner's SSN (or EIN, if the owner has one). If the LLC is classified as a corporation or partnership, enter the entity's EIN.

Note: See *What Name and Number To Give the Requester*, later, for further clarification of name and TIN combinations.

How to get a TIN. If you do not have a TIN, apply for one immediately. To apply for an SSN, get Form SS-5, Application for a Social Security Card, from your local SSA office or get this form online at *www.SSA.gov*. You may also get this form by calling 800-772-1213. Use Form W-7, Application for IRS Individual Taxpayer Identification Number, to apply for an ITIN, or Form SS-4, Application for Employer Identification Number, to apply for an EIN. You can apply for an EIN online by accessing the IRS website at *www.irs.gov/EIN*. Go to *www.irs.gov/Forms* to view, download, or print Form W-7 and/or Form SS-4. Or, you can go to *www.irs.gov/OrderForms* to place an order and have Form W-7 and/or Form SS-4 mailed to you within 15 business days.

If you are asked to complete Form W-9 but do not have a TIN, apply for a TIN and enter "Applied For" in the space for the TIN, sign and date the form, and give it to the requester. For interest and dividend payments, and certain payments made with respect to readily tradable instruments, you will generally have 60 days to get a TIN and give it to the requester before you are subject to backup withholding on payments. The 60-day rule does not apply to other types of payments. You will be subject to backup withholding on all such payments until you provide your TIN to the requester.

Note: Entering "Applied For" means that you have already applied for a TIN or that you intend to apply for one soon. See also *Establishing U.S. status for purposes of chapter 3 and chapter 4 withholding*, earlier, for when you may instead be subject to withholding under chapter 3 or 4 of the Code.

Caution: A disregarded U.S. entity that has a foreign owner must use the appropriate Form W-8.

Part II. Certification

To establish to the withholding agent that you are a U.S. person, or resident alien, sign Form W-9. You may be requested to sign by the withholding agent even if item 1, 4, or 5 below indicates otherwise.

For a joint account, only the person whose TIN is shown in Part I should sign (when required). In the case of a disregarded entity, the person identified on line 1 must sign. Exempt payees, see *Exempt payee code*, earlier.

Signature requirements. Complete the certification as indicated in items 1 through 5 below.

1. Interest, dividend, and barter exchange accounts opened before 1984 and broker accounts considered active during 1983. You must give your correct TIN, but you do not have to sign the certification.

2. Interest, dividend, broker, and barter exchange accounts opened after 1983 and broker accounts considered inactive during 1983. You must sign the certification or backup withholding will apply. If you are subject to backup withholding and you are merely providing your correct TIN to the requester, you must cross out item 2 in the certification before signing the form.

3. Real estate transactions. You must sign the certification. You may cross out item 2 of the certification.

4. Other payments. You must give your correct TIN, but you do not have to sign the certification unless you have been notified that you have previously given an incorrect TIN. "Other payments" include payments made in the course of the requester's trade or business for rents, royalties, goods (other than bills for merchandise), medical and health care services (including payments to corporations), payments to a nonemployee for services, payments made in settlement of payment card and third-party network transactions, payments to certain fishing boat crew members and fishermen, and gross proceeds paid to attorneys (including payments to corporations).

5. Mortgage interest paid by you, acquisition or abandonment of secured property, cancellation of debt, qualified tuition program payments (under section 529), ABLE accounts (under section 529A), IRA, Coverdell ESA, Archer MSA or HSA contributions or distributions, and pension distributions. You must give your correct TIN, but you do not have to sign the certification.

What Name and Number To Give the Requester

For this type of account:	Give name and SSN of:
1. Individual	The individual
2. Two or more individuals (joint account) other than an account maintained by an FFI	The actual owner of the account or, if combined funds, the first individual on the account[1]
3. Two or more U.S. persons (joint account maintained by an FFI)	Each holder of the account
4. Custodial account of a minor (Uniform Gift to Minors Act)	The minor[2]
5. a. The usual revocable savings trust (grantor is also trustee)	The grantor-trustee[1]
b. So-called trust account that is not a legal or valid trust under state law	The actual owner[1]
6. Sole proprietorship or disregarded entity owned by an individual	The owner[3]
7. Grantor trust filing under Optional Filing Method 1 (see Regulations section 1.671-4(b)(2)(i)(A))**	The grantor*
8. Disregarded entity not owned by an individual	The owner
9. A valid trust, estate, or pension trust	Legal entity[4]
10. Corporation or LLC electing corporate status on Form 8832 or Form 2553	The corporation
11. Association, club, religious, charitable, educational, or other tax-exempt organization	The organization
12. Partnership or multi-member LLC	The partnership
13. A broker or registered nominee	The broker or nominee
14. Account with the Department of Agriculture in the name of a public entity (such as a state or local government, school district, or prison) that receives agricultural program payments	The public entity
15. Grantor trust filing Form 1041 or under the Optional Filing Method 2, requiring Form 1099 (see Regulations section 1.671-4(b)(2)(i)(B))**	The trust

[1] List first and circle the name of the person whose number you furnish. If only one person on a joint account has an SSN, that person's number must be furnished.

[2] Circle the minor's name and furnish the minor's SSN.

[3] You must show your individual name on line 1, and enter your business or DBA name, if any, on line 2. You may use either your SSN or EIN (if you have one), but the IRS encourages you to use your SSN.

[4] List first and circle the name of the trust, estate, or pension trust. (Do not furnish the TIN of the personal representative or trustee unless the legal entity itself is not designated in the account title.)

* **Note:** The grantor must also provide a Form W-9 to the trustee of the trust.

** For more information on optional filing methods for grantor trusts, see the Instructions for Form 1041.

Note: If no name is circled when more than one name is listed, the number will be considered to be that of the first name listed.

Secure Your Tax Records From Identity Theft

Identity theft occurs when someone uses your personal information, such as your name, SSN, or other identifying information, without your permission to commit fraud or other crimes. An identity thief may use your SSN to get a job or may file a tax return using your SSN to receive a refund.

To reduce your risk:

- Protect your SSN,
- Ensure your employer is protecting your SSN, and
- Be careful when choosing a tax return preparer.

If your tax records are affected by identity theft and you receive a notice from the IRS, respond right away to the name and phone number printed on the IRS notice or letter.

If your tax records are not currently affected by identity theft but you think you are at risk due to a lost or stolen purse or wallet, questionable credit card activity, or a questionable credit report, contact the IRS Identity Theft Hotline at 800-908-4490 or submit Form 14039.

For more information, see Pub. 5027, Identity Theft Information for Taxpayers.

Victims of identity theft who are experiencing economic harm or a systemic problem, or are seeking help in resolving tax problems that have not been resolved through normal channels, may be eligible for Taxpayer Advocate Service (TAS) assistance. You can reach TAS by calling the TAS toll-free case intake line at 877-777-4778 or TTY/TDD 800-829-4059.

Protect yourself from suspicious emails or phishing schemes. Phishing is the creation and use of email and websites designed to mimic legitimate business emails and websites. The most common act is sending an email to a user falsely claiming to be an established legitimate enterprise in an attempt to scam the user into surrendering private information that will be used for identity theft.

The IRS does not initiate contacts with taxpayers via emails. Also, the IRS does not request personal detailed information through email or ask taxpayers for the PIN numbers, passwords, or similar secret access information for their credit card, bank, or other financial accounts.

If you receive an unsolicited email claiming to be from the IRS, forward this message to *phishing@irs.gov*. You may also report misuse of the IRS name, logo, or other IRS property to the Treasury Inspector General for Tax Administration (TIGTA) at 800-366-4484. You can forward suspicious emails to the Federal Trade Commission at *spam@uce.gov* or report them at *www.ftc.gov/complaint*. You can contact the FTC at *www.ftc.gov/idtheft* or 877-IDTHEFT (877-438-4338). If you have been the victim of identity theft, see *www.IdentityTheft.gov* and Pub. 5027.

Go to *www.irs.gov/IdentityTheft* to learn more about identity theft and how to reduce your risk.

Privacy Act Notice

Section 6109 of the Internal Revenue Code requires you to provide your correct TIN to persons (including federal agencies) who are required to file information returns with the IRS to report interest, dividends, or certain other income paid to you; mortgage interest you paid; the acquisition or abandonment of secured property; the cancellation of debt; or contributions you made to an IRA, Archer MSA, or HSA. The person collecting this form uses the information on the form to file information returns with the IRS, reporting the above information. Routine uses of this information include giving it to the Department of Justice for civil and criminal litigation and to cities, states, the District of Columbia, and U.S. commonwealths and territories for use in administering their laws. The information may also be disclosed to other countries under a treaty, to federal and state agencies to enforce civil and criminal laws, or to federal law enforcement and intelligence agencies to combat terrorism. You must provide your TIN whether or not you are required to file a tax return. Under section 3406, payors must generally withhold a percentage of taxable interest, dividends, and certain other payments to a payee who does not give a TIN to the payor. Certain penalties may also apply for providing false or fraudulent information.

MATERIAL DATA SHEETS

SMARTBUY
Purchasing Program Tarkett Sports

CRUMB RUBBER
SAFETY DATA SHEET (SDS)

Section 1: Identification

(a) Product identifier used on the label: Crumb Rubber

(b) Other identifiers: *None*

(c) Recommended Use: As a ingredient in rubberized asphalt, sports fields/tracks, mulch, or rubber molded products

(d) Manufacturer: CRM Co., LLC Ph Number: (310) 538-2222
Address: 15800 S. Avalon Blvd
Compton, CA 90221

(e) Emergency Phone Number: (310) 538-2222

Section 2: Hazard Identification

(a) Classification of the chemical in accordance with 1910.1200(d): *None*

(b) Signal word, Hazard statements, symbol, and precautionary statements in accordance with 1910.1200(f): *N/A*

(c) Hazards not otherwise classified: This material is generally thought to be a nuisance dust.

(d) Ingredients of unknown acute toxicity: *None*

Section 3: Composition / Information on ingredients

(a) Chemical name and concentration range of all ingredients which are classified as health hazards:

MATERIAL (CAS)	WT%
Napthenic/Aromatic Oil (64742-04-07)	Aprox. 22%
Carbon Black (133-86-4)	Aprox. 25%

MATERIAL (CAS)	WT%
Talc, respirable dust (14807-9-6)	less than 5%
Zinc Oxide, fume (1314-12-2)	less than 3%
Zinc Oxide, total dust (1314-12-2)	less than 3%
Respirable fraction	less than 3%

(b) A concentration range is reported above because of batch-to-batch variability.

Section 4: First-aid measures

(a) Description of necessary measures:

Inhalation This product contains fine particles and may contain fine fibers that may be inhaled. In the event of exposure to high concentrations of fine fibers, remove affected personnel from area.

Skin contact Wash skin with soap and water.

Eye contact Wash eyes with water.

Ingestion Ingestion of product is unlikely, and product is inert and does not pose an ingestion hazard.

(b) Most important symptoms/effects: This product contains fine fibers and particles that may cause itching. This product could potentially aggravate allergies to dust exposure or inhalation.

(c) Indication of immediate medical attention: *None known.*

Section 5: Fire fighting measures

(a) Suitable (and unsuitable) extinguishing media: Water, Foam, Dry Powder (DO NOT USE HIGH PRESSURE WATER)

(b) Specific hazards arising from the chemical: Dust may be explosive if mixed with air in critical proportions (approx. 0.025 oz/ft^3) and in the presence of an ignition source. The hazard is similar to that of many organic solids. (concentration estimate is based on 200 mesh dust).

Oils will be released during combustion.

(c) Special protective equipment and precautions for firefighters: Noxious gasses may be formed under fire conditions, wear OSHA approved SCBA.

Section 6: Accidental release measures

(a) Personal precautions, protective equipment, and emergency procedures:
Wear gloves and other protective clothing while cleaning up. Material is NOT a hazardous waste.

(b) Methods and materials for containment and cleaning up:
Sweep or vacuum into disposal containers. Dispose of in accordance with federal, state, and local laws and regulations.

If material burns, oils will be released. These must be disposed of in accordance with federal, state, and local laws and regulations.

Section 7: Handling and storage

(a) Precautions for safe handling: Take care not to spill material, or to release fine particles and fibers into the air.

(b) Conditions for safe storage: Do not store near flame or ignition source. Do not store hot material in tubs or containers where spontaneous combustion could occur.

Section 8: Exposure controls/personal protection

(a) Exposure limit of ingredients/materials that may be released from product:

MATERIAL (CAS)	OSHA PEL	ACGIH TLV
Napthenic/Aromatic Oil (64742-04-07)		(5.0 mg/m^3)
Carbon Black (133-86-4)	3.5 mg/m^3	

MATERIAL (CAS)	OSHA PEL	ACGIH TLV
Talc, respirable dust (14807-9-6)	2.0 mg/m^3	(2.0 mg/m^3)
Zinc Oxide, fume (1314-12-2)	5.0 mg/m^3	(10 mg/m^3)
Zinc Oxide, total dust (1314-12-2)	10 mg/m^3	

(b) Appropriate engineering controls: No engineering controls are recommended for this product.

(c) Individual protection measures: Gloves, dust mask, and protective clothing recommended.

Section 9: Physical and chemical properties

(a)	Appearance:	Black, granular particles
(b)	Odor:	Slight smell of vulcanized rubber
(c)	Odor Threshold:	Not found
(d)	pH:	Not found
(e)	Melting point/freezing point:	Not found
(f)	Initial boiling point and boiling range:	Not found
(g)	Flash point:	For a dust cloud: Approx $320^{O}C$
(h)	Evaporation rate:	Not found
(i)	Flammability (solid, gas):	Will burn when exposed to excessive heat or flame.
(j)	Upper/lower flammability or explosive limits:	LEL = 0.025 oz/ft^3
(k)	Vapor pressure:	N/A
(l)	Vapor density:	N/A
(m)	Relative density:	0.95 to 1.4
(n)	Solubility:	Not found

(o)	Partition coefficient:	Not found
(p)	Auto-ignition temperature:	370 – 450°C
(q)	Decomposition temperature:	Not found
(r)	Viscosity:	Not found

Section 10: Stability and reactivity

(a)	Reactivity:	Stable
(b)	Chemical stability:	Stable
(c)	Possibility of hazardous reactions:	Hazardous polymerization will not occur
(d)	Conditions to avoid:	Do not store hot material in hoppers due to the possibility of spontaneous combustion.
(e)	Incompatible materials:	Avoid strong oxidizing agents.
(f)	Hazardous decomposition products:	Thermal decomposition may produce carbon monoxide, carbon dioxide, fume dust, sulfur dioxide, zinc oxide, liquid and gaseous hydrocarbons.

Section 11: Toxicological information

(a)	Likely routes of exposure:	Inhalation of dust
(b)	Symptoms of exposure:	Mild irritation of the respiratory tract
(c)	Delayed, immediate, and chronic effects of exposure:	Mild irritation of the respiratory tract
(d)	Numerical measures of toxicity:	Not found
(e)	Carcinogen?:	No

Section 12: Ecological Information (non-mandatory)

Not available

Section 13: Disposal considerations (non-mandatory)

Not available

Section 14: Transport Information (non-mandatory)

Not available

Section 15: Regulatory information (non-mandatory)

Not available

Section 16: Other information, including date of preparation or last revision

Date of last revision: January 1, 2016

SAFETY DATA SHEET

I. PRODUCT IDENTIFICATION

Manufacturer:
USA: Nike, Inc.
One Bowman Ave
Beaverton, OR 97005

Chemical/Trade Name: Processed Rubber 1430
Product Description: Pre-consumer processed rubber footwear outsoles and flashings (14-30 mesh)
Synonyms:

For Further Information:
Product Information:
Nike Inc.
One Bowerman Drive,
Beaverton OR, 97005, USA
Tel: 866 519 4752 (US/Canada)
Tel: +1 866 519 4752 (International)

Recommended Use:

For Emergency:
Tel: 866 519 4752 (US/Canada)
Tel: +1 866 519 4752 (International)

Nike SDS Number: 2007
Revision Number: 1.0

Date Issued: May 18, 2018
Last Revision: May 18, 2018

II. HAZARD IDENTIFICATION

Hazard Classification: Specific Target Organ Toxicity (Single Exposure) Category 3.

Signal Word: Warning

Hazard Statement(s): May cause respiratory irritation.

Precautionary Statement(s): Avoid breathing dust.

Use only outdoors or in a well-ventilated area.

If inhaled: Remove person to fresh air and keep comfortable for breathing.

Call a poison center/doctor/…/if you feel unwell.

Store in a well-ventilated place.

Keep container tightly closed.

Store locked up.

Dispose of contents/container in accordance with local/regional/national/international regulations.

Other hazards: Contains particulates not otherwise regulated (total dust and respirable fraction). Burning releases toxic fumes.

III. COMPOSITION/INFORMATION ON INGREDIENTS

Ingredient	CAS Number	% by Wt.
Polybutadiene/Isoprene/ butylnitrile block polymer	68514-37-4 9003-31-0 9003-18-3	>98
Zinc Oxide	1314-13-2	< 2

Note: The specific chemical identity and/or exact percentage (concentration) of composition has been withheld as a trade secret.

IV. FIRST AID MEASURES

Take proper precautions to ensure your own health and safety before attempting to rescue a victim and providing first aid. For specific information refer to Section VIII: EXPOSURE CONTROLS AND PERSONAL PROTECTION.

Distinguishing signs and symptoms: Irritation.

Inhalation: Dust. If overcome, remove victim from exposure - avoid becoming a casualty. Allow patient to assume most comfortable position and keep warm. Keep at REST until fully recovered. Effects may be delayed. Seek medical advice.

Skin Contact: Potentially abrasive. If inflammation occurs, remove from contact.

Eye-contact: Immediately irrigate with copious quantities of water for at least 15 minutes. Eyelids to be held open. Seek immediate medical assistance.

Ingestion: Choking hazard. If breathing stops, apply Heimlich thrust and evacuation. Seek immediate medical attention.

V. FIRE FIGHTING MEASURES

Specific Hazards: Combustible. Burning produces very high heat release rates and toxic fumes. Once ignited, can produce rapid flame spread, intense heat, dense smoke, and toxic gases. Can turn into a burning liquid which can drip and flow. A hot and difficult to control fire may develop. This material emits acrid smoke and fumes when burning. No explosion hazard.

Extinguishing media: Water spray, carbon dioxide, dry chemical powder, or appropriate foam.

Fire Fighting Procedures: As in any fire, wear a self-contained breathing apparatus in pressure-demand, MSHA/NIOSH (approved or equivalent), and full protective gear (See Section VIII).

Hazardous Combustion Products: Carbon dioxide, carbon monoxide, cyanide, incomplete organic combustion products.

VI. ACCIDENTAL RELEASE MEASURES

Personal Precautions: Wear NIOSH approved respirator for dust handling. Use personal protective equipment (See Section VIII).

Emergency Procedures: Not determined.

Methods and Materials for Containment: Not determined.

Cleanup Procedures: Collect product and re-use if possible. Place waste in a bag and hold for disposal. Do not wash down with water. Keep away from ignition sources.

VII. HANDLING AND STORAGE

Handling: Avoid formation of dust and aerosols under uncontrolled conditions. Provide appropriate exhaust ventilation at places where dust is formed. Make sure there is sufficient ventilation in the work area.

Storage: Store in a well-ventilated place. Keep container tightly closed. Store locked up. Store away from excessive heat. Do not store material near any ignition sources such as exposed electrical or gas heating elements. Do not smoke in storage areas.

VIII. EXPOSURE CONTROLS AND PERSONAL PROTECTION

	Occupational Exposure Limits		
Ingredient:	**OSHA (PELs)**	**ACGIH (TLV)**	**Other**
Polybutadiene/Isoprene/ butylnitrile block polymer	Not available	Not available	
Zinc Oxide	TWA 5 mg/m^3 (fume), TWA 15 mg/m^3 (total dust), TWA 5 mg/m^3 (resp dust)	TWA 2 mg/m^3 (resp fraction), STEL 10 mg/m^3 (resp fraction)	MAK 1 mg/m^3 (as fume), IDLH 500 mg/m^3
Total dust	15 mg/m^3	Not available	
Resp fraction (dust)	5 mg/m^3	Not available	

TWA = total weighted average; STEL = short-term exposure limit; MAK = maximum workplace concentrations (Germany); resp = respirable; IDLH: immediately dangerous to life or health

Engineering Controls (Ventilation): Use negative pressure containment and local exhaust under dusty preparations.

Respiratory Protection (NIOSH/MSHA approved): If respirable dust is present at concentrations that may exceed 5 mg/m^3: any HEPA and/or particulate mask that meets or exceeds P95 filter requirement is recommended. Reference OSHA requirements under 25CFR 1910.1027 for higher concentration environments.

Skin Protection: Potentially abrasive**.** Wear gloves and protective coveralls.

Eye Protection: ANSI rated safety glasses/goggles.

Other Protection: None.

IX. PHYSICAL AND CHEMICAL PROPERTIES

Appearance	Irregular granules ranging from 595 µm to 1.4 mm depending on grade. Varied color.	**Flammability or Explosive Limits**	Not determined
Odor	Distinctive	**Vapor Pressure**	Not applicable
Odor Threshold	Not determined	**Vapor Density**	Not applicable
pH	Not applicable	**Specific Gravity (water = 1.0)**	0.57
Melting Point/Freezing Point	Approximately 410 ºC	**Solubility(ies)**	> 0.0001 mg/l (water)
Initial Boiling Point and Range	Not applicable	**Partition Coefficient: n-octanol/water**	Not applicable
Flash Point	280 ºC (DIN 51584)	**Auto-Ignition Temperature**	Not determined
Evaporation Rate	Not determined	**Decomposition Temperature**	> 500 ºC
Flammability (solid, gas)	Slightly flammable solid	**Viscosity**	Solid
Total Ash Content (%)	27.7		

X. STABILITY AND REACTIVITY DATA

Reactivity: Not determined.

Chemical Stability: Stable at room temperature. No stabilizers required. No autopolymerization.

Hazardous Reactions or Conditions: Not determined.

Conditions to Avoid: Avoid dust accumulation.

Incompatibilities: Strong oxidizing agents.

Hazardous Decomposition Products: Carbon monoxide, carbon dioxide, dense smoke, and other toxic vapors.

XI. TOXICOLOGICAL DATA

Routes of Exposure: Incidental ingestion, dermal contact, inhalation.

Short-Term Exposure Effects: Not determined.
Dermal LD_{50}: Not determined.

Long-Term Exposure Effects: Not determined.

Acute Toxicity:
Oral LD_{50}: Not determined.
Inhalation LC_{50}: Not determined.

Symptoms:
Inhalation: Inhalation of particulates may cause irritation of mucosal membrane.
Ingestion: The substance may cause effects on the gastrointestinal tract if ingested in significant quantities.
Skin Contact: May cause abrasive irritation if exposed for prolonged periods.
Eye Contact: Slight eye irritant. No specific syndrome identified.

Additional Information:

Carcinogenicity:
NTP: Not listed.
IARC: Not listed.
OSHA: Not Listed.

XII. ECOLOGICAL INFORMATION

Information not required under OSHA.

Environmental Fate: Not readily biodegradable; does not bioaccumulate.

Environmental Mobility: Non-soluble. Particulate matter mobile in water.

Environmental Toxicity: Very low toxicity. May produce habitat hazards in high volume releases. No measurable aquatic toxicity. No measurable aquatic toxicity. May leach zinc into runoff water particularly right after fresh applications. First flush available zinc has been measured at <1 mg/kg.

XIII. DISPOSAL INFORMATION

Information not required under OSHA.

Dispose of contents/container in accordance with local/regional/national/international regulations. Do not dump or release directly to waterways or the environment. Incinerate, treat or landfill in accordance with applicable environmental control regulations. Recycle if possible. Not a categorical or listed hazardous waste based on TCLP data and process knowledge.

XIV. TRANSPORT INFORMATION

Information not required under OSHA.

V. REGULATORY INFORMATION

No known limitations under US state regulations or international law.

XVI. OTHER INFORMATION

Prepared by: Intertox, Inc.

Date of Preparation: May 18, 2018

Disclaimer:
****
Nike provides the information contained herein in good faith but makes no representation as to its comprehensiveness or accuracy. Accordingly, Nike will not be responsible for damages resulting from use of or reliance upon this information. This document is intended only as a guide to the appropriate precautionary handling of the material by a properly trained person using this product. Individuals receiving the information must exercise their independent judgment in determining its appropriateness for a particular purpose. This information relates only to the specific material designated and may not be valid for such material used in combination with any other materials or in any process. Such information is to the best of this company's knowledge and believed accurate and reliable as of the date indicated.

****

Clearlake Lava, Inc.
(707) 998-1115
Point Lakeview Rock & Redi Mix
(707) 995-1515
P.O. Box 1250, Clearlake Oaks, CA 95423 FAX (707) 998-9575

SAFETY DATA SHEET

Product Name: Volcanic Rock Scoria Product Description: Amorphous aluminum silicate. This SDS applies to all aggregate gradations.

1. IDENTIFICATION OF THE SUBSTANCE/PREPARATION, AND OF THE COMPANY/UNDERTAKING

1.1 Identification of the substance or preparation
Product Names: Scoria, Pumice

1.2 Other means of identification - Amorphous aluminum silicate

1.3 Use of the substance / preparation – Filler for compounded products or composites

1.4

Company Name:	Clearlake Lava	Emergency number: 707-998-1115
Address:	14572 East Hwy 20	Information number: 707-998-1115
	Clearlake Oaks, CA 95423	Date prepared: May 2015
	Point Lakeview Rock & Redi Mix	Emergency number: 707-995-1515
	13329 Point Lakeview Rd.	Information Number: 707-995-1515
	Lower Lake, CA 95457	Date prepared: May 2015

2. HAZARDS IDENTIFICATION

None (Quartz content below detectable limits of 0.1%)

3. COMPOSITION INFORMATION:

Other principal inert components: **Complex silicates or oxides of AL, K, Na, Fe, Ca, Mg, Ti.**
Chemical Identity, major components: **Amorphous Aluminum Silicate (Al_2O_3)**
MxOy • SiO_2 (M=Al, Ca, Mg + other minor metal oxides, with bound amorphous silica (SiO_2)
Common Names: **Pumice, volcanic rock**
HMIS (Hazardous Materials Identification System Ratings: NPCA/CPCA) Based on hazard rating of 4 = Most severe

Health	**0**
Flammability	**0**
Reactivity	**0**

Personal Protection: Use approved dust mask; goggles to prevent eye irritation.

4. FIRST AID

Material is non-poisonous.
Eyes – Flush with copious amounts of clean water for 15 minutes. If irritation persists, consult a physician.
Inhalation – Blow nose, rinse mouth, drink water to clear throat. Remove to fresh air.

5. FIRE AND EXPLOSION HAZARD DATA

Flash Point:	**N/A**	Flammable Limits:	**N/A**
LEL:	**N/A**	UEL:	**N/A**
Extinguishing Media:	**N/A**		

Special Fire Fighting Procedures: **N/A**
Unusual Fire and Explosion Hazards: **None**

6. ACCIDENTAL RELEASE

Vacuum all clean spillage. If sweeping is necessary, use a dust suppressant.

7. HANDLING AND STORAGE

Precautions to be taken in handling as storing: **Use techniques that minimize generating dust.**
Other precautions: **Material, when wet, may be slippery on a smooth surface. Use caution.**

8. EXPOSURE CONTROLS / PERSONAL PROTECTION

Respiratory Protection: **Use an approved dust mask, such as a particulate filter respirator shall be considered when the following conditions exist. This material is defined as a nuisance dust, therefore when dust accumulations meet or exceed the industry standard TLV of 10mg/3m an approved particulate respirator shall be worn.**

Ventilation	**Local Exhaust:**	**Special Other:**
	Mechanical (General): Sweep or vacuum all spills	**Use filter-equipped vacuum to remove dust; Do Not blow off with compressed air.**

Protective Gloves: **Not Required** Eye Protection: **Goggles recommended. (Thick dust accumulations**

Other Protective Clothing or Equipment: **Not Required** Work / Hygienic Practices: **Avoid thick accumulations of dust. Clean clothes with vacuum hose, not by blowing off.**

9. PHYSICAL/CHEMICAL PROPERTIES (N/A = Not Applicable)

Boiling Point:	**N/A**	Specific Gravity	**1.50-2.50**
Vapor Pressure (mm Hg.):	**N/A**	Melting Point	**N/A**
Vapor Density : Air = 1)	**N/A**	Evaporation Rate (Butyl Acetate = 1)	**N/A**
Solubility in Water:	**Negligible**	pH	**7.2**
Appearance and Odor:	**Off-White Powder. No odor**		

10. STABILITY AND REACTIVITY

Stability	**Unstable**	**Conditions to Avoid:**
	Stable X	**No special precautions**

Incompatibility (Materials to Avoid): **No Incompatibility. (Reacts with hydrofluoric acid: soluble in HF)**

Hazardous Decomposition of Byproducts: **May react with hydrofluoric acid to form toxic silicon tetra- flouride gas.**

Hazardous Polymerization	May Occur	Conditions to Avoid:
	Will Not Occur X	No special conditions

11. TOXICOLOGICAL INFORMATION

Classified as Nuisance Dust only.

Route(s) of Entry: Inhalation: **Yes** Skin: **No** Ingestion: **Non-Hazardous**
Carcinogenicity: NTP? **No** IARC Monographs? **Vol. 68 (1997)** OSHA Regulated? **No**

Silica-Group 3. (Not classifiable as to carcinogenicity to humans.)

Signs and Symptoms of Exposure: **In extreme exposures, some congestion may occur.**

Medical conditions which may be aggravated by exposure: **Pre-existing upper respiratory and lung disease such as, but not limited to, Emphysema and Asthma.**

Acute health effects: **Transitory upper respiratory irritant.**

Chronic health effects: **Inhalation of high levels of any nuisance dust over long periods of time may cause lungs to be more vulnerable to pneumoconiosis (lung disease).**

12. ECOLOGICAL INFORMATION

No special considerations.

13. DISPOSAL CONSIDERATIONS

Bury as non-toxic waste in an approved landfill in accordance with all federal, state and local regulations.

14. TRANSPORTATION INFORMATION

Not controlled by IATA and to be considered as non-dangerous goods.

15. REGULATORY INFORMATION

Not regulated.

16. OTHER

EINECS No. 310-127-6
ACID No. 99901E1050
TSCA Inventory: Listed as Pumice (CAS # 1332-09-8)
DSL:Listed as Pumice (CAS # 1332-09-8)
GHS STATEMENT: This product does NOT contain any harmful substances listed in GHS
WHMIS STATEMENT: This product is classified as an UNCONTROLLED product according to WHMIS classification criteria.

REACH Statement: This product is EXEMPT from REACH registration in accordance with section (Substances exempted from registration) of the Guidance for Registration of the REACH regulation. As such, the obligations for downstream users and the provisions on substance and dossier evaluation do not apply.

FieldTurf

175 N. Industrial Blvd. NE

Calhoun, GA 30701 USA

TEL. 1 (888) 364-6541

FAX (706) 625-6534

SAFETY DATA SHEET

1. IDENTIFICATION

COOLPLAY

2. COMPOSITION

An extruded composite composed of polymeric and mineral ingredients.

3. HAZARDOUS INDENTIFICATION

Non-hazardous in normal conditions of usage.

The product is under certain conditions capable of dust explosion.

The thermal decomposition of the mixture can release hazardous combustion products.

4. FIRST AID MEASURES

Inhalation: If difficulties occur after dust, remove to fresh air and seek medical attention.

Skin contact: Skin contact not expected to cause any harmful effects.

Eye contact: Wash affected eyes for at least 15 minutes under running water with eyelids help open. If wearing contact lenses, remove before rinse. If irritation occurs or persists, consult a doctor.

Ingestion: Do not induce vomiting. Immediately rinse mouth and drink water (200-300ml). Do not give anything to eat or drink if the person is unconscious.

5. FIRE FIGHTING MEASURES

The product is combustible. In a sustained fire, the material will degrade rapidly with eventual release of fumes. Fire may produce irritating gases. Combustion by-products include, but are not limited to, carbon dioxide, carbon monoxide, and aldehydes. Wear suitable respiratory protection equipment.

Suitable extinguishing media: dry powder, foam.

Do not use full water jet, directly into burning material. It may disperse the material.

In the event of a fire and/or explosion, do not breathe fumes. Fire residues must be disposed in accordance with local regulations.

6. ACCIDENTAL RELEASE MEASURES

Individual precautions: no specific precautions.

Environmental precautions: prevent spreading in the environment; the material is not biodegradable.

Cleaning: normal picking of solid material. However, vacuum cleaning is preferred, to avoid dusty conditions.

7. HANDLING AND STORAGE

Storage: Store protected from moisture and heat sources, in close containers.

Careful handling is evident to keep the product in good quality.

8. EXPOSURE CONTROL / PERSONAL PROTECTION

General rules of protection and hygiene on the work place and local regulations apply.

Ensure appropriate exhausted and ventilated working place. Without those conditions, wear dust breathing mask.

No hand, skin and body protection required under normal conditions.

Wear safety glasses with side-shields during manipulation of the material.

9. PHYSICAL AND CHEMICAL PROPERTIES

Appearance: granules/pellets

Odour: N/A

Colour: Greenish

Specific gravity (25°C) > 1.00

Solubility in water: Insoluble

Melting point: >110°C

Boiling point: n/a

Flash point: n/a

10. STABILITY AND REACTIVITY

No hazardous reactions if stored and handled as prescribed/indicated.

No decomposition if stored and applied as directed.

None hazardous reactions known.

Avoid sources of ignition and humidity.

Keep away from strong alkalis.

The decomposition products from this material may include carbon dioxide, carbon monoxide, selected alkenes, aldehydes, ketones, hydrocarbons, particles. The product is stable in normal environmental conditions.

FieldTurf – 175 N. Industrial Blvd. NE - Calhoun, GA 30701 USA – TEL. 1 (888) 364-6541 – FAX (706) 625-6534 – info@fieldturf.com
www.fieldturf.com

11. TOXICOLOGICAL INFORMATION

None information of toxicity available.

Irritation: None known.

Sensitization: None known.

12. ECOLOGICAL INFORMATION

No environmental detrimental effect known.

13. DISPOSAL CONSIDRATIONS

Waste can be disposed of on regular disposal sites observing local regulations.

14. TRANSPORT INFORMATION

There aren't restrictive rules about the transportation of infill material for artificial grass.

It isn't dangerous for marine transport, air transport and road transport.

15. REGULARITY INFORMATION

None known.

16. OTHER INFORMATION

The data contained in this Safety Data Sheet are based on our current knowledge available at the time of compilation and is intended to describe the product only in terms of health and safety requirements.

It does not signify any warranty with regard to specific properties or specifications.

FieldTurf – 175 N. Industrial Blvd. NE - Calhoun, GA 30701 USA – TEL. 1 (888) 364-6541 – FAX (706) 625-6534 – info@fieldturf.com
www.fieldturf.com

FieldTurf

175 N. Industrial Blvd. NE

Calhoun, GA 30701 USA

TEL. 1 (888) 364-6541

FAX (706) 625-6534

SAFETY DATA SHEET

1. IDENTIFICATION

ECOMAX

2. COMPOSITION

An extruded composite composed of polymeric and mineral ingredients.

3. HAZARDOUS INDENTIFICATION

Non-hazardous in normal conditions of usage.

The product is under certain conditions capable of dust explosion.

The thermal decomposition of the mixture can release hazardous combustion products.

4. FIRST AID MEASURES

Inhalation: If difficulties occur after dust, remove to fresh air and seek medical attention.

Skin contact: Skin contact not expected to cause any harmful effects.

Eye contact: Wash affected eyes for at least 15 minutes under running water with eyelids help open. If wearing contact lenses, remove before rinse. If irritation occurs or persists, consult a doctor.

Ingestion: Do not induce vomiting. Immediately rinse mouth and drink water (200-300ml). Do not give anything to eat or drink if the person is unconscious.

5. FIRE FIGHTING MEASURES

The product is combustible. In a sustained fire, the material will degrade rapidly with eventual release of fumes. Fire may produce irritating gases. Combustion by-products include, but are not limited to, carbon dioxide, carbon monoxide, and aldehydes. Wear suitable respiratory protection equipment.

Suitable extinguishing media: dry powder, foam.

Do not use full water jet, directly into burning material. It may disperse the material.

In the event of a fire and/or explosion, do not breathe fumes. Fire residues must be disposed in accordance with local regulations.

6. ACCIDENTAL RELEASE MEASURES

Individual precautions: no specific precautions.

Environmental precautions: prevent spreading in the environment; the material is not biodegradable.

Cleaning: normal picking of solid material. However, vacuum cleaning is preferred, to avoid dusty conditions.

7. HANDLING AND STORAGE

Storage: Store protected from moisture and heat sources, in close containers.

Careful handling is evident to keep the product in good quality.

8. EXPOSURE CONTROL / PERSONAL PROTECTION

General rules of protection and hygiene on the work place and local regulations apply.

Ensure appropriate exhausted and ventilated working place. Without those conditions, wear dust breathing mask.

No hand, skin and body protection required under normal conditions.

Wear safety glasses with side-shields during manipulation of the material.

9. PHYSICAL AND CHEMICAL PROPERTIES

Appearance: granules/pellets

Odour: N/A

Colour: Greenish

Specific gravity (25°C) > 1.00

Solubility in water: Insoluble

Melting point: >110°C

Boiling point: n/a

Flash point: n/a

10. STABILITY AND REACTIVITY

No hazardous reactions if stored and handled as prescribed/indicated.

No decomposition if stored and applied as directed.

None hazardous reactions known.

Avoid sources of ignition and humidity.

Keep away from strong alkalis.

The decomposition products from this material may include carbon dioxide, carbon monoxide, selected alkenes, aldehydes, ketones, hydrocarbons, particles. The product is stable in normal environmental conditions.

FieldTurf – 175 N. Industrial Blvd. NE - Calhoun, GA 30701 USA – TEL. 1 (888) 364-6541 – FAX (706) 625-6534 – info@fieldturf.com
www.fieldturf.com

11. TOXICOLOGICAL INFORMATION

None information of toxicity available.

Irritation: None known.

Sensitization: None known.

12. ECOLOGICAL INFORMATION

No environmental detrimental effect known.

13. DISPOSAL CONSIDRATIONS

Waste can be disposed of on regular disposal sites observing local regulations.

14. TRANSPORT INFORMATION

There aren't restrictive rules about the transportation of infill material for artificial grass.

It isn't dangerous for marine transport, air transport and road transport.

15. REGULARITY INFORMATION

None known.

16. OTHER INFORMATION

The data contained in this Safety Data Sheet are based on our current knowledge available at the time of compilation and is intended to describe the product only in terms of health and safety requirements.

It does not signify any warranty with regard to specific properties or specifications.

FieldTurf – 175 N. Industrial Blvd. NE - Calhoun, GA 30701 USA – TEL. 1 (888) 364-6541 – FAX (706) 625-6534 – info@fieldturf.com

www.fieldturf.com

MATERIAL SAFETY DATA SHEET

Product: PRIMARY CARPET BACKINGS

1. Identification product and company

Product information
Commercial Name: Applicable to all PR (Primary) and EQ (Equalmatt)
Manufacturer Name: Mattex Fabrics
P.O. Box 112470 Dubai, United Arab Emirates
Information in case of emergency: Tel: +9714 3431155 Fax: +9714 3217174

2. Composition

Woven polypropylene film tapes

3. Hazard Identification

The material is made up of approximately 98% Polypropylene and 2% additives which does not contain dangerous substance as defined in EU directive 76/769/EEC (Reference to Carcinogenic Compound 1 & 2).

4. First Aid Measures

No special measures necessary.

5. Fire-Fighting advise

Suitable extinguishing media:
Dry extinguishing agent (dry powder)
Foam
Water spray jet

6. Handling & Storage

Safe Transportation and Handling Advise

Use Forklift with appropriate load capacity to carry the product based on its specified gross weight;
Use Forklift with appropriate mounting attachment, i.e. Boom type

Safe Storage Advise

Store product in a well ventilated area and temperature not more than 30° C.
Stock product not more than 4 piles.

7. Ecological & Disposal considerations

Materials are recyclable (refer to appropriate Polypropylene recycling process)
Where necessary, consult waste disposal agency.

This information is given without engagement, however, it is reliable and is based in our present state of knowledge. It should not be construed as guaranteeing specific properties of the products described or their suitability for a particular application. Existing acts and regulations must be observed by the recipient of our products under his own responsibility.

Information issued on: 1/14/2020 Any information issued previously is hereby cancelled.

MATTEX FABRICS

MATERIAL SAFETY DATA SHEET

Product: SECONDARY CARPET BACKINGS

1. Identification product and company

Product information
Commercial Name: Applicable to all SE (Secondary) and SP (Supermatt)
Manufacturer Name: Mattex Fabrics
P.O. Box 112470 Dubai, United Arab Emirates
Information in case of emergency: Tel: +9714 3431155 Fax: +9714 3217174

2. Composition

Woven polypropylene film tapes and texturized yarns.

3. Hazard Identification

The material is made up of approximately 98% Polypropylene and 2% additives which does not contain dangerous substance as defined in EU directive 76/769/EEC (Reference to Carcinogenic Compound 1 & 2).

4. First Aid Measures

No special measures necessary.

5. Fire-Fighting advise

Suitable extinguishing media:
Dry extinguishing agent (dry powder)
Foam
Water spray jet

6. Handling & Storage

Safe Transportation and Handling Advise

Use Forklift with appropriate load capacity to carry the product based on its specified gross weight;
Use Forklift with appropriate mounting attachment, i.e. Boom type

Safe Storage Advise

Store product in a well ventilated area and temperature not more than 30° C.
Stock product not more than 4 piles.

7. Ecological & Disposal considerations

Materials are recyclable (refer to appropriate Polypropylene recycling process)
Where necessary, consult waste disposal agency.

This information is given without engagement, however, it is reliable and is based in our present state of knowledge. It should not be construed as guaranteeing specific properties of the products described or their suitability for a particular application. Existing acts and regulations must be observed by the recipient of our products under his own responsibility.

Information issued on: 1/14/2020 Any information issued previously is hereby cancelled.

CRUM RUBBER
MATERIAL SAFETY DATA SHEET

CRM, LLC
15800 South Avalon Boulevard
Rancho Dominguez, CA 90220

Emergency Phone Number (310) 538-2222

I. PRODUCT IDENTIFICATION/CHEMICAL & PHYSICAL CHARACTERISTICS

PRODUCT NAME: *Crumb Rubber*: Solubility in Water: *Insoluble*

APPEARANCE: *Black granular particles* ODOR: Smell of vulcanized rubber

SPECIFIC GRAVITY: *1.1-1.2 g/cc* MELTING POINT: *N/A*

VAPOR PRESSURE: *N/A* VAPOR DENSITY: *N/A*

EVAPORATION RATE: *N/A* BOILING POINT: *N/A*

II. HAZARDOUS INGREDIENT

MATERIAL (CAS)	WT%	OSHA PEL	(ACGIH TLV)
Napthenic/Aromatic Oil (64742-04-7)	*Aprox. 22%*		*(5.0 mg/m^3)*
Carbon Black (133-86-4)	*Aprox. 25%*	*3.5 mg/m^3*	
Talc, respirable dust (14807-9-6)	*Less than 5%*	*2.0 mg/m^3*	*(2.0 mg/m^3)*
Zinc Oxide, fume (1314-12-2)	*Less than 3%*	*5.0 mg/m^3 (STEL) 10 mg/m^3*	
Zinc Oxide, total dust (1314-12-2)	*Less than 3%*	*10 mg/m^3*	
Respirable fraction	*Less than 3 %*		

III. FIRE AND EXPLOSION HAZARD DATA

FLASH POINT: Ignition temperature of dust cloud: *320 ℃ (608 ℉) Approximately*

LEL: 0.025 ounce/*cubic foot* UEL *N/A*

EXTINGUISHING MEDIA: *Water, foam, dry powder (DO NOT USE HIGH PRESSURE WATER)*

SPECIAL FIRE FIGHTING PROCEDURES: *Noxious gases may be formed under fire conditions, wear OSHA approve self-contained breathing apparatus*.

UNUSUAL FIRE AND EXPLOSION HAZARDOUS: *Dust may be explosive if mixed with air in critical proportions and in the presence of an ignition source. The hazard is similar to that of many organic solids*.*

**Estimate is based on data for 200 mesh synthetic and hard natural rubber.*

IV. REACTIVITY DATA

STABLE: *Yes*

CONDITION TO AVOID: *Conditions that will cause ignition or burning.*

INCOMPATIBILITY (material to avoid). *Avoid strong oxidizing agents.*

HAZARDOUS DECOMPOSITION OR BYPRODUCTS: *Thermal decomposition may produce carbon monoxide, carbon dioxide, fume dust, sulfur dioxide zinc oxide, liquid and gaseous hydrocarbons.*

HAZARDOUS POLYMERIZATION: *Will not occur.*

CONDITION TO AVOID: *Do not store hot material in hoppers due to the possibility of spontaneous combustion.*

V. HEALTH HASAD DATA

ROUTES OF ENTERY: *Inhalation*

HEALTH HAZARDS (Acute and Chronic): *The product contains fine particles and can contain fine fibers that may cause itching. Otherwise no health hazards are known. This material generally thought to be a nuisance dust.*

CARCINOGENCITY: *Rubber syntactic or natural is not listed as a carcinogen.*

MEDICAL CONDITIONS GENERALLY AGGRAVATED BY EXPOSURE: *None are known, however, it could potentially aggravate allergies to dust exposure or inhalation.*

EMERGENCY AND FIRST AID PROCEDURES: *Normal washing of skin with soap and water, ordinary means of personal hygiene are adequate.*

VI. PRECAUTIONS FOR SAFE HANDLING AND USE

STEPS TO BE TAKEN IN CASE MATERIAL IS RELEASED OR SPILED: *Sweep or vacuum into disposal containers.*

WASTE DISPOSAL METHOD: *Product not defined as hazardous waste. Dispose of in accordance with federal, state, and local regulations.*

PRECAUTIONS TO BE TAKEN IN HANDLING AND STORING: *Do not store near flame or ignition source. Do not store hot material in tubs or containers where spontaneous combustion could occur.*

OTHER PRECAUTIONS: *If material burns, oils will be released. There must be disposed of in accordance with federal, state, and local regulations.*

VII. CONTROL MESURES

RESPIRATORY PROTECTION (Specify Type): *Use any dust and mist respirator for up to 10 mg/m^3 .*

VENTALITION: *Yes if dusty condition occur.*

SPECIAL: *None*

MECHANICAL: *Dust collectors and exhaust fans.*

PROTECTIVE GLOVES: *Recommend.*

EYE PROTECTION: *Use safety goggles to prevent dust entry.*

OTHERPROTECTIVE CLOTHING OR EQUIPMENT: *Enough fresh air should flow past the user to prevent exposure to airborne fibers and particles*.

WORK/HYGIENIC PRACTCES: Good personal hygiene, frequent washing with soap and water of exposed areas, remove and clean soiled clothing

---

The information contained in this MSDA is consistent with the US Department of Labor OSHA form OMB No. 1218-0072. Consult OSHA Hazard Communication Standard 29 CFR 1910.1200 for additional information. To fully understand the use of any material the user should avail themselves for reference material and expert consultation in the fields of fire prevention, ventilation, and toxicology.

MATERIAL SAFETY DATA SHEET

ENVIROFILL Last Updated May 7, 2011

1. CHEMICAL PRODUCT AND COMPANY IDENTIFICATION

Product Name: **Envirofill**

Product Use: Infill for synthetic / artificial turf

Company Identification: **USGreentech, LLC**
3607 Church Street
Cincinnati, OH 45244
(800) 548-0402 For Product Information
(800) 548-0402 For Emergencies

2. COMPOSITION / INFORMATION ON INGREDIENTS

CONTAINING: HAZARDOUS AND/OR REGULATED COMPONENTS

Chemical Name	Amount	CAS Number	OSHA PEL (TWA)	ACGIH TWA
Silicon Dioxide	>98%	14808-60-7	100 ppm	50 ppm
Acrylic Polymers	<2%	Proprietary	Not Listed	Not Listed
Calcium Carbonate	<0.2%	471-34-1	5 mg/m³	3 mg/m³
Microban	<0.2%	Proprietary	Not Listed	Not Listed

COMPOSITION NOTE: This product consists of silicon dioxide coated with an acrylic polymer. Although Envirofill® is composed primarily of Silica Sand (SIO2), and such sand is potentially a source of respirable dust, the sand particles in Envirofill ® are thoroughly encapsulated in a coating which captures all dust and ingredients. Under normal circumstances, this prevents any normal release of silica dust to the workplace. An independent study was conducted by Duke University School of Medicine on this product and determined that this product does not contain hazardous substances when evaluated under ASTM F963.8.2. Further this product should be classified as NOT being toxic, corrosive, skin/eye irritants, or a strong sensitizer as defined in 16 CFR 1500.3(b)(5), and 1500.3(b)(7) – (9) of the Federal Hazardous Substances Act.

HAZARDS DISCLOSURE: This product does not contain known hazardous materials in reportable levels as defined by the OSHA Hazard Communication Standard 29 CFR 1910.1200 except as listed above. As defined under Sara 311 and 312, this product does not contain known hazardous materials.

3. HAZARDS IDENTIFICATION

EMERGENCY OVERVIEW

This product may cause mechanical irritation to eyes and/or skin.

POTENTIAL HEALTH EFFECTS
ROUTES OF ENTRY: Eyes, Inhalation, Ingestion.
INHALATION: Not expected to be an inhalation hazard when used as intended.
INGESTION: Ingestion of this product may cause gastrointestinal irritation.
SKIN CONTACT: Contact with skin may cause mechanical irritation.
EYE CONTACT: Contact with eyes will cause mechanical irritation.
CHRONIC EXPOSURE: None known

4. FIRST AID MEASURES

INHALATION FIRST AID: This product is not expected to generate dust under normal conditions. If an individual has breathing difficulties remove individual to fresh air. If individual stops breathing, use artificial respiration to support vital functions. Seek medical attention immediately.
SKIN CONTACT FIRST AID This product may produce a mechanical irritation. It is not expected to require medical attention.
EYE CONTACT FIRST AID: If contact with eyes, immediately flush eyes with plenty of water for at least 15 minutes lifting upper and lower eyelids occasionally. GET MEDICAL ATTENTION IF IRRITATION PERSISTS.
INGESTION FIRST AID: Routine use of this product is not expected to cause any situation which could lead to ingestion.
NOTE TO PHYSICIANS: Treat symptoms

5. FIRE FIGHTING MEASURES

FLAMMABLE PROPERTIES: Non-Flammable
AUTO IGNITION TEMPERATURE: Not Applicable
FLASH POINT: NA.
FLAMMABLE LIMITS IN AIR, % by Volume: lel: NA; uel: NA
EXTINGUISHING MEDIA: Use fire extinguishing materials appropriate for surrounding fire.
FIRE & EXPLOSION HAZARDS: None

6. ACCIDENTAL RELEASE MEASURES

SPILL CLEAN-UP PROCEDURES: Vacuum or sweep up material and place all spilled residue in a suitable container. Dispose of in accordance with U.S. Federal, State, and local hazardous waste disposal regulations.

7. HANDLING AND STORAGE

STORAGE CONDITIONS: Store containers in a cool, dry location, and away from direct sunlight.

HANDLING: Avoid breakage of bagged material or spills of bulk material. Material does not have a shelf life. Stack bagged material so that it does not have the opportunity to fall. This material is not hazardous under normal storage conditions.

8. EXPOSURE CONTROLS / PERSONAL PROTECTION

AIRBORNE EXPOSURE LIMITS: See Section 2 for component airborne exposure levels..
VENTILATION SYSTEM: Not required when using this product.
PERSONAL RESPIRATORS (NIOSH APPROVED): Not required when using this product.
RESPIRATORY PROTECTION: Respirators should be used in accordance with OSHA requirements (29 CFR 1910.134).

SKIN PROTECTION: Not required in normal applications.
EYE PROTECTION: Use safety glasses to prevent contact.

9. PHYSICAL AND CHEMICAL PROPERTIES

FORM: Solid
ODOR: Odorless
SOLUBILITY IN WATER: Negligible
MELTING POINT: 1710ºC
AUTO IGNITION TEMPERATURE: NA
pH: NA
COLOR: Various
BOILING POINT: 2230ºC
SPECIFIC GRAVITY: 2.9 – 3.1
EVAPORATION RATE (BuAc=1): NA
FLASH POINT: NA
BULK DENSITY: ~110 lbs/ft³

10. STABILITY AND REACTIVITY

STABILITY: Stable under ordinary conditions of use and storage.
CONDITIONS TO AVOID: Extreme temperatures above 870ºC
HAZARDOUS POLYMERIZATION: Will not occur
INCOMPATIBILITY WITH OTHER MATERIALS: None
HAZARDOUS DECOMPOSITION: None

11. TOXICOLOGICAL INFORMATION

TOXICOLOGICAL DATA:
There is no Data available for this finished product.
SUSPECTED CANCER AGENT: A component of this product is found on the following lists: FEDERAL OSHA Z LIST, NTP, IARC, or CAL/OSHA but because the product is encapsulated in a polymer coating and having a larger particle size it should therefore not be considered to be, or suspected to be a carcinogenic agent by these agencies.

12. ECOLOGICAL INFORMATION

ENVIRONMENTAL FATE:
No Data
ENVIRONMENTAL TOXICITY:
There is no data that suggests that this product is toxic to birds, fish, invertebrates, microorganisms or plants.

13. DISPOSAL CONSIDERATIONS

WASTE DISPOSAL:
Recover, reclaim or recycle when practical.
Dispose of material in accordance with federal, state and local requirements.

14. TRANSPORTATION INFORMATION

DOMESTIC (LAND, D.O.T.), INTERNATIONAL (WATER, I.M.O.), INTERNATIONAL (AIR, I.C.A.O.)
NON-REGULATED MATERIAL

15. REGULATORY INFORMATION

FEDERAL REGULATORY STATUS:
U.S. SARA REPORTING REQUIREMENTS: The components of this product are not subject to the reporting requirements of Sections 302, 304, and 313 of Title III of the Superfund Amendments and Reauthorization Act, and are listed as follows:
U.S. SARA THRESHOLD PLANNING QUANTITY: There are no specific Threshold Planning Quantities for the components of this product. The default Federal MSDS submission and inventory requirement filing threshold of 10,000 lbs (4,540 kg) therefore applies, per 40 CFR 370.20.
U.S. CERCLA REPORTABLE QUANTITY (RQ): None
U.S. TSCA INVENTORY STATUS: The components of this product are listed on the TSCA Inventory.

16. OTHER INFORMATION

Prepared By: Paul Eigbrett (MSDS Authoring PLUS)
ADDITIONAL INFORMATION:

The data in this Material Safety Data Sheet relates only to the specific material designated herein. It does not relate to use in combination with any other material or in any process. This Material Safety Data Sheet (MSDS) has been reviewed to fully comply with the guidance contained in the ANSI MSDS standard (ANSI Z400.1-2004)

Although the information set forth herein is presented in good faith and believed to be correct as of the date of issuance, it has been furnished by our suppliers; consequently, USGreentech, LLC makes no representations or warranties, express or implied, with respect to information herein presented. The information set forth herein is supplied upon the condition that the persons receiving same will make their own determination as to suitability for their purposes prior to use and relates only to the specific product described and not to such product in combination with any other product. In no event will USGreentech, LLC be responsible for damages of any nature resulting from the use of or reliance upon this information.

END OF MSDS

Safety Data Sheet
ULTRABOND TURF PU 1K FS
Safety Data Sheet dated: 06/16/2021 - version 4
Date of first edition: 06/03/2016

1. IDENTIFICATION

Product identifier

Mixture identification:

Trade name: ULTRABOND TURF PU 1K FS

Trade code: 902337

Recommended use of the chemical and restrictions on use

Recommended use: Polyurethane-based adhesive

Restrictions on use: N.A.

Name, address, and telephone number of the chemical manufacturer, importer, or other responsible party

Company: MAPEI CORP. (USA and Puerto Rico)
1144 East Newport Center Drive
33442 - Deerfield Beach - FL - USA

Responsible: RDProductSafety@mapei.com

Emergency 24 hour numbers:

Emergency Number (USA/Canada) CHEMTREC 1(800) 424-9300 / 1(703) 527-3887

Emergency Transport CANUTEC (Canada) 1-613-996-6666

2. HAZARD(S) IDENTIFICATION

Classification of the chemical

Skin Irrit. 2	Causes skin irritation.
Eye Irrit. 2A	Causes serious eye irritation.
Resp. Sens. 1	May cause allergy or asthma symptoms or breathing difficulties if inhaled.
Skin Sens. 1	May cause an allergic skin reaction.
Carc. 2	Suspected of causing cancer if inhaled.
STOT RE 2	May cause damage to organs through prolonged or repeated exposure if inhaled.

Label elements

Pictograms and Signal Words

Danger

Hazard statements:

H315	Causes skin irritation.
H317	May cause an allergic skin reaction.
H319	Causes serious eye irritation.
H334	May cause allergy or asthma symptoms or breathing difficulties if inhaled.
H351	Suspected of causing cancer if inhaled.
H373	May cause damage to organs through prolonged or repeated exposure if inhaled.

Precautionary statements:

P201	Obtain special instructions before use.
P202	Do not handle until all safety precautions have been read and understood.
P260	Do not breathe mist/vapours/spray.
P264	Wash skin thoroughly after handling.
P272	Contaminated work clothing should not be allowed out of the workplace.
P280	Wear protective gloves/protective clothing/eye protection/face protection.
P284	[In case of inadequate ventilation] wear respiratory protection.
P302+P352	IF ON SKIN: Wash with plenty of water.

P304+P341	IF INHALED: If breathing is difficult, remove victim to fresh air and keep at rest in a position comfortable for breathing.
P305+P351+P338	IF IN EYES: Rinse cautiously with water for several minutes. Remove contact lenses, if present and easy to do. Continue rinsing.
P308+P313	IF exposed or concerned: Get medical advice/attention.
P314	Get medical advice/attention if you feel unwell.
P321	Specific treatment (see supplementary instructions on this label).
P333+P313	If skin irritation or rash occurs: Get medical advice/attention.
P337+P313	If eye irritation persists: Get medical advice/attention.
P342+P311	If experiencing respiratory symptoms: Call a doctor.
P362+P364	Take off contaminated clothing and wash it before reuse.
P405	Store locked up.
P501	Dispose of contents/container in accordance with applicable regulations.

Ingredient(s) with unknown acute toxicity:

None

Hazards not otherwise classified identified during the classification process:

None

3. COMPOSITION/INFORMATION ON INGREDIENTS

Substances

N.A.

Mixtures

Hazardous components within the meaning of 29 CFR 1910.1200 and related classification:

List of components

Concentration (% w/w)	Name	Ident. Numb.	Classification	Registration Number
5-10 %	DIPHENYLMETHANE-2,4-DIISOCYANATE	CAS:5873-54-1	Eye Irrit. 2A, H319; Skin Irrit. 2, H315; STOT SE 3, H335; Resp. Sens. 1, H334; Acute Tox. 4, H332; STOT RE 2, H373; Skin Sens. 1, H317	
2.5-5 %	4,4'-METHYLENEDIPHENYL DIISOCYANATE	CAS:101-68-8	Acute Tox. 4, H332; Skin Irrit. 2, H315; Eye Irrit. 2A, H319; STOT SE 3, H335; STOT RE 2, H373; Carc. 2, H351; Resp. Sens. 1, H334; Skin Sens. 1, H317	
1-2.5 %	2,2-DIMORPHOLINODIETHYLETHER	CAS:6425-39-4	Eye Irrit. 2B, H320	
0.49-1 %	4-METHYLBENZENESULFONYL ISOCYANATE	CAS:4083-64-1	Eye Irrit. 2A, H319; STOT SE 3, H335; Skin Irrit. 2, H315; Resp. Sens. 1, H334	

4. FIRST AID MEASURES

Description of first aid measures

In case of skin contact:

Immediately take off all contaminated clothing.

OBTAIN IMMEDIATE MEDICAL ATTENTION.

Obtain medical attention if skin related symptoms persist.

Remove contaminated clothing immediately and dispose of safely.

After contact with skin, wash immediately with soap and plenty of water.

In case of eyes contact:

After contact with the eyes, rinse with water with the eyelids open for a sufficient length of time, then consult an opthalmologist immediately.

Protect uninjured eye.

In case of Ingestion:

Do not induce vomiting, get medical attention showing the SDS and the hazard label.

In case of Inhalation:

If breathing is irregular or stopped, administer artificial respiration.

In case of inhalation, consult a doctor immediately and show him packing or label.

Most important symptoms/effects, acute and delayed

Eye irritation
Eye damages
Skin Irritation
Erythema
Indication of any immediate medical attention and special treatment needed
In case of accident or unwellness, seek medical advice immediately (show directions for use or safety data sheet if possible).
Treatment:
(see paragraph 4.1)

5. FIRE-FIGHTING MEASURES

Extinguishing media
Suitable extinguishing media:
Water.
Carbon dioxide (CO2).
Unsuitable extinguishing media:
None in particular.
Specific hazards arising from the chemical
Do not inhale explosion and combustion gases.
Burning produces heavy smoke.
Hazardous combustion products: N.A.
Explosive properties: N.A.
Oxidizing properties: N.A.
Special protective equipment and precautions for fire-fighters
Use suitable breathing apparatus.
Collect contaminated fire extinguishing water separately. This must not be discharged into drains.
Move undamaged containers from immediate hazard area if it can be done safely.

6. ACCIDENTAL RELEASE MEASURES

Personal precautions, protective equipment and emergency procedures
Wear personal protection equipment.
Wear breathing apparatus if exposed to vapours/dusts/aerosols.
Provide adequate ventilation.
Use appropriate respiratory protection.
Do not allow to enter into soil/subsoil. Do not allow to enter into surface water or drains.
Limit leakages with earth or sand.
Methods and material for containment and cleaning up
Suitable material for taking up: absorbing material, organic, sand
Retain contaminated washing water and dispose it.

7. HANDLING AND STORAGE

Precautions for safe handling
Avoid contact with skin and eyes, inhalation of vapours and mists.
Exercise the greatest care when handling or opening the container.
Use localized ventilation system.
Don't use empty container before they have been cleaned.
Before making transfer operations, assure that there aren't any incompatible material residuals in the containers.
Contaminated clothing should be changed before entering eating areas.
Do not eat or drink while working.
See also section 8 for recommended protective equipment.
Conditions for safe storage, including any incompatibilities
Storage temperature: N.A.
Keep away from food, drink and feed.
Incompatible materials:
None in particular.
Instructions as regards storage premises:
Adequately ventilated premises.

8. EXPOSURE CONTROLS/PERSONAL PROTECTION

Control parameters

List of components with OEL value

Component	OEL Type	Country	Ceiling	Long Term mg/m3	Long Term ppm	Short Term mg/m3	Short Term ppm	Behaviour	Note
DIPHENYLMETHANE-2,4-DIISOCYANATE	MAK	AUSTRIA		0,05	0,005	0,1	0,01		
4,4'-METHYLENEDIPHENYL DIISOCYANATE	ACGIH				0,005				respiratory sensitization (listed under Methylene bisphenyl isocyanate (MDI));
	OSHA		C			0,2	0,02		
	MAK	GERMANY		0,05					
	ACGIH				0,005				respiratory sensitization (listed under Methylene bisphenyl isocyanate (MDI))
	MAK	AUSTRIA		0,05	0,005	0,1	0,01		

Appropriate engineering controls: N.A.

Individual protection measures

Eye protection:

Use close fitting safety goggles, don't use eye lens.

Protection for skin:

Use clothing that provides comprehensive protection to the skin, e.g. cotton, rubber, PVC or viton.

Protection for hands:

Suitable materials for safety gloves; 29 CFR 1910.138 - ANSI/ISEA 105:

Polychloroprene - CR: thickness >=0,5mm; breakthrough time >=480min.

Nitrile rubber - NBR: thickness >=0,35mm; breakthrough time >=480min.

Butyl rubber - IIR: thickness >=0,5mm; breakthrough time >=480min.

Fluorinated rubber - FKM: thickness >=0,4mm; breakthrough time >=480min.

Use impervious gloves that provides comprehensive protection, e.g. P.V.C., neoprene or rubber.

Respiratory protection:

Respiratory protection must be used where exposure levels exceed workplace exposure limits. Refer to 29 CFR 1910.134 - CSA Z94.4 for information on selection and use of appropriate respiratory protection equipment.

Use adequate protective respiratory equipment.

9. PHYSICAL AND CHEMICAL PROPERTIES

Information on basic physical and chemical properties

Physical state: Liquid

Appearance and colour: paste Green

Odour: Odourless

Odour threshold: No data available

pH: 7.00

Melting point / freezing point: No data available

Initial boiling point and boiling range: No data available

Flash point: 100 °C (212 °F)

Evaporation rate: No data available

Upper/lower flammability or explosive limits: No data available

Vapour density: No data available

Vapour pressure: No data available

Relative density: 1.04 g/cm3

Solubility in water: Insoluble

Solubility in oil: No data available

Partition coefficient (n-octanol/water): No data available

Auto-ignition temperature: No data available

Decomposition temperature: No data available

Viscosity: No data available

Explosive properties: No data available

Oxidizing properties: No data available

Solid/gas flammability: No data available

Other information

Substance Groups relevant properties No data available

Miscibility: No data available

Fat Solubility: No data available

Conductivity: No data available

10. STABILITY AND REACTIVITY

Reactivity

Stable under normal conditions

Chemical stability

Data not available.

Possibility of hazardous reactions

None.

Conditions to avoid

Stable under normal conditions.

Incompatible materials

None in particular.

Hazardous decomposition products

None.

11. TOXICOLOGICAL INFORMATION

Information on toxicological effects

Toxicological information of the mixture:

There is no toxicological data available on the mixture. Consider the individual concentration of each component to assess toxicological effects resulting from exposure to the mixture.

Toxicological information on main components of the mixture:

4,4'-METHYLENEDIPHENYL DIISOCYANATE	a) acute toxicity	LC50 Inhalation Rat = 369 mg/m3 4h
		LD50 Oral Rat = 31600 mg/kg
2,2-DIMORPHOLINODIETHYLETHER	a) acute toxicity	LD50 Oral Rat 300 mg/kg
4-METHYLBENZENESULFONYL ISOCYANATE	a) acute toxicity	LC50 Inhalation Rat > 640 ppm 1h
		LD50 Oral Rat = 2234 mg/kg

If not differently specified, the information required in the regulation and listed below must be considered as N.A.

a) acute toxicity

b) skin corrosion/irritation

c) serious eye damage/irritation

d) respiratory or skin sensitisation

e) germ cell mutagenicity

f) carcinogenicity

g) reproductive toxicity

h) STOT-single exposure

Toxicological kinetics, metabolism and distribution information

i) STOT-repeated exposure

j) aspiration hazard

Substance(s) listed on the IARC Monographs:

4,4'-METHYLENEDIPHENYL DIISOCYANATE	Group 3

Substance(s) listed as OSHA Carcinogen(s):

None

Substance(s) listed as NIOSH Carcinogen(s):

None

Substance(s) listed on the NTP report on Carcinogens:

None

12. ECOLOGICAL INFORMATION

Toxicity

Adopt good working practices, so that the product is not released into the environment.

Eco-Toxicological Information:

List of components with eco-toxicological properties

Component	Ident. Numb.	Ecotox Infos
2,2-DIMORPHOLINODIETHYLETHER	CAS: 6425-39-4	a) Aquatic acute toxicity : LC50 Fish Danio rerio > 2150 mg/L 96h ECHA

Persistence and degradability

N.A.

Bioaccumulative potential

N.A.

Mobility in soil

N.A.

Other adverse effects

N.A.

13. DISPOSAL CONSIDERATIONS

Waste treatment methods

The generation of waste should be avoided or minimized wherever possible. Recover if possible.

Methods of disposal:

Disposal of this product, solutions, packaging and any by-products should at all times comply with the requirements of environmental protection and waste disposal legislation and any regional local authority requirements.

Dispose of surplus and nonrecyclable products via a licensed waste disposal contractor.

Do not dispose of waste into sewers.

Disposal considerations:

Do not allow to enter drains or watercourses.

Dispose of product according to all federal, state and local applicable regulations.

If this product is mixed with other wastes, the original waste product code may no longer apply and the appropriate code should be assigned.

Dispose of containers contaminated by the product in accordance with local or national legal provisions. For further information, contact your local waste authority.

Special precautions:

This material and its container must be disposed of in a safe way. Care should be taken when handling untreated empty containers.

Avoid dispersal of spilled material and runoff and contact with soil, waterways, drains and sewers.

Empty containers or liners may retain some product residues. Do not re-use empty containers.

14. TRANSPORT INFORMATION

Not classified as dangerous in the meaning of transport regulations.

UN number

ADR-UN number: N.A.

DOT-UN Number: N.A.

IATA-Un number: N.A.

IMDG-Un number: N.A.

UN proper shipping name

ADR-Shipping Name: N.A.

DOT-Proper Shipping Name: N.A.

IATA-Technical name: N.A.

IMDG-Technical name: N.A.

Transport hazard class(es)

ADR-Class: N.A.

DOT-Hazard Class: N.A.

IATA-Class: N.A.

IMDG-Class: N.A.

Packing group

ADR-Packing Group: N.A.

DOT-Packing group: N.A.

IATA-Packing group: N.A.

IMDG-Packing group: N.A.

Environmental hazards

Marine pollutant: No

Environmental Pollutant: N.A.

Transport in bulk according to Annex II of MARPOL73/78 and the IBC Code

N.A.

Special precautions

Department of Transportation (DOT):

N.A.

Road and Rail (ADR-RID) :

N.A.

Air (IATA) :

N.A.

Sea (IMDG) :

N.A.

---

15. REGULATORY INFORMATION

USA - Federal regulations

TSCA - Toxic Substances Control Act

TSCA inventory:

All the components are listed on the TSCA inventory

TSCA listed substances:

DIPHENYLMETHANE-2,4-DIISOCYANATE	is listed in TSCA	Section 8b Section 8a - PAIR
4,4'-METHYLENEDIPHENYL DIISOCYANATE	is listed in TSCA	Section 8b Section 8a - PAIR
2,2-DIMORPHOLINODIETHYLETHER	is listed in TSCA	Section 8b
4-METHYLBENZENESULFONYL ISOCYANATE	is listed in TSCA	Section 8b

SARA - Superfund Amendments and Reauthorization Act

Section 302 - Extremely Hazardous Substances:

No substances listed

Section 304 - Hazardous substances:

4,4'-METHYLENEDIPHENYL DIISOCYANATE

Section 313 - Toxic chemical list:

4,4'-METHYLENEDIPHENYL DIISOCYANATE

CERCLA - Comprehensive Environmental Response, Compensation, and Liability Act

Substance(s) listed under CERCLA:

4,4'-METHYLENEDIPHENYL DIISOCYANATE	Reportable quantity:	5000	pounds

CAA - Clean Air Act

CAA listed substances:

4,4'-METHYLENEDIPHENYL DIISOCYANATE	is listed in CAA	Section 112(b) - HAP Section 112(b) - HON

CWA - Clean Water Act

CWA listed substances:

No substances listed

USA - State specific regulations

California Proposition 65

Substance(s) listed under California Proposition 65:

No substances listed

Massachusetts Right to know

Substance(s) listed under Massachusetts Right to know:

4,4'-METHYLENEDIPHENYL DIISOCYANATE

Pennsylvania Right to know

Substance(s) listed under Pennsylvania Right to know:

4,4'-METHYLENEDIPHENYL DIISOCYANATE

New Jersey Right to know

Substance(s) listed under New Jersey Right to know:

4,4'-METHYLENEDIPHENYL DIISOCYANATE

Canada - Federal regulations

DSL - Domestic Substances List

DSL Inventory:

All the substances are listed in the DSL.

NDSL - Non Domestic Substances List

NDSL Inventory:

No substances listed

NPRI - National Pollutant Release Inventory

Substances listed in NPRI:

No substances listed

---

16. OTHER INFORMATION

Safety Data Sheet dated: 6/16/2021 - version 4

Additional classification information

NFPA Health: 1 = Slight
NFPA Flammability: 1 = Combustible if heated
NFPA Reactivity: 1 = Slight
NFPA Special Risk: N.A.

Reasonable care has been taken in the preparation of this information, but the manufacturer makes no warranty of merchantability or any other warranty, expressed or implied, with respect to this information. The manufacturer makes no representations and assumes no liability for any direct, incidental or consequential damages resulting from its use. The information herein is presented in good faith and believed to be accurate as of the effective date given. It is the buyer's responsibility to ensure that its activities comply with Federal, State or provincial, and local laws.

This document was prepared by a competent person who has received appropriate training.

It is the duty of the user to ensure that this information is appropriate and complete with respect to the specific use intended.

This SDS cancels and replaces any preceding release.

Code	Description
H315	Causes skin irritation.
H317	May cause an allergic skin reaction.
H319	Causes serious eye irritation.
H320	Causes eye irritation.
H332	Harmful if inhaled.
H334	May cause allergy or asthma symptoms or breathing difficulties if inhaled.
H335	May cause respiratory irritation.
H351	Suspected of causing cancer.
H351	Suspected of causing cancer if inhaled.
H373	May cause damage to organs through prolonged or repeated exposure.
H373	May cause damage to organs through prolonged or repeated exposure if inhaled.

Legend to abbreviations and acronyms used in the safety data sheet:

ADR: European Agreement concerning the International Carriage of Dangerous Goods by Road.
RID: Regulation Concerning the International Transport of Dangerous Goods by Rail.
IMDG: International Maritime Code for Dangerous Goods.
IATA: International Air Transport Association.
IATA-DGR: Dangerous Goods Regulation by the "International Air Transport Association" (IATA).
ICAO: International Civil Aviation Organization.
ICAO-TI: Technical Instructions by the "International Civil Aviation Organization" (ICAO).
GHS: Globally Harmonized System of Classification and Labeling of Chemicals.

CLP: Classification, Labeling, Packaging.
EINECS: European Inventory of Existing Commercial Chemical Substances.
INCI: International Nomenclature of Cosmetic Ingredients.
CAS: Chemical Abstracts Service (division of the American Chemical Society).
GefStoffVO: Ordinance on Hazardous Substances, Germany.
LC50: Lethal concentration, for 50 percent of test population.
LD50: Lethal dose, for 50 percent of test population.
DNEL: Derived No Effect Level.
PNEC: Predicted No Effect Concentration.
TLV: Threshold Limiting Value.
TWATLV: Threshold Limit Value for the Time Weighted Average 8 hour day. (ACGIH Standard).
STEL: Short Term Exposure limit.
STOT: Specific Target Organ Toxicity.
WGK: German Water Hazard Class.
KSt: Explosion coefficient.

Paragraphs modified from the previous revision:

- 1. IDENTIFICATION OF THE SUBSTANCE/PREPARATION AND OF THE COMPANY/UNDERTAKING
- 3. COMPOSITION/INFORMATION ON INGREDIENTS
- 6. ACCIDENTAL RELEASE MEASURES
- 7. HANDLING AND STORAGE
- 8. EXPOSURE CONTROLS/PERSONAL PROTECTION
- 9. PHYSICAL AND CHEMICAL PROPERTIES
- 11. TOXICOLOGICAL INFORMATION
- 12. ECOLOGICAL INFORMATION
- 14. TRANSPORT INFORMATION
- 15. REGULATORY INFORMATION
- 16. OTHER INFORMATION

Safety Data Sheet
ULTRABOND TURF PU 2K PART B
Safety Data Sheet dated: 06/16/2021 - version 6
Date of first edition: 05/30/2015

1. IDENTIFICATION

Product identifier

Mixture identification:

Trade name: ULTRABOND TURF PU 2K PART B

Trade code: 2982

Recommended use of the chemical and restrictions on use

Recommended use: Hardener

Restrictions on use: N.A.

Name, address, and telephone number of the chemical manufacturer, importer, or other responsible party

Company: MAPEI CORP. (USA and Puerto Rico)
1144 East Newport Center Drive
33442 - Deerfield Beach - FL - USA

Responsible: RDProductSafety@mapei.com

Emergency 24 hour numbers:

Emergency Number (USA/Canada) CHEMTREC 1(800) 424-9300 / 1(703) 527-3887

Emergency Transport CANUTEC (Canada) 1-613-996-6666

2. HAZARD(S) IDENTIFICATION

Classification of the chemical

Eye Irrit. 2B	Causes eye irritation.
Skin Irrit. 2	Causes skin irritation.
Acute Tox. 4	Harmful if inhaled.
Resp. Sens. 1	May cause allergy or asthma symptoms or breathing difficulties if inhaled.
Skin Sens. 1	May cause an allergic skin reaction.
STOT SE 3	May cause respiratory irritation.
STOT RE 2	May cause damage to organs through prolonged or repeated exposure if inhaled.

Label elements

Pictograms and Signal Words

Danger

Hazard statements:

H315	Causes skin irritation.
H317	May cause an allergic skin reaction.
H320	Causes eye irritation.
H332	Harmful if inhaled.
H334	May cause allergy or asthma symptoms or breathing difficulties if inhaled.
H335	May cause respiratory irritation.
H373	May cause damage to organs through prolonged or repeated exposure if inhaled.

Precautionary statements:

P260	Do not breathe dust/fume/gas/mist/vapours/spray.
P264	Wash skin thoroughly after handling.
P271	Use only outdoors or in a well-ventilated area.
P272	Contaminated work clothing should not be allowed out of the workplace.
P280	Wear protective gloves.
P284	[In case of inadequate ventilation] wear respiratory protection.

P302+P352	IF ON SKIN: Wash with plenty of water.
P304+P340	IF INHALED: Remove person to fresh air and keep comfortable for breathing.
P305+P351+P338	IF IN EYES: Rinse cautiously with water for several minutes. Remove contact lenses, if present and easy to do. Continue rinsing.
P312	Call a POISON CENTER if you feel unwell.
P314	Get medical advice/attention if you feel unwell.
P333+P313	If skin irritation or rash occurs: Get medical advice/attention.
P342+P311	If experiencing respiratory symptoms: Call a POISON CENTER or doctor/physician.
P362+P364	Take off contaminated clothing and wash it before reuse.
P403+P233	Store in a well-ventilated place. Keep container tightly closed.
P405	Store locked up.
P501	Dispose of contents/container in accordance with applicable regulations.

Ingredient(s) with unknown acute toxicity:

None

Hazards not otherwise classified identified during the classification process:

None

3. COMPOSITION/INFORMATION ON INGREDIENTS

Substances

N.A.

Mixtures

Hazardous components within the meaning of 29 CFR 1910.1200 and related classification:

List of components

Concentration (% w/w)	Name	Ident. Numb.	Classification	Registration Number
50-75 %	POLYMETHYLENE POLYPHENYLENE ISOCYANATE	CAS:9016-87-9	Acute Tox. 4, H332; STOT SE 3, H335; Skin Irrit. 2, H315; STOT RE 2, H373; Eye Irrit. 2A, H319; Resp. Sens. 1, H334; Skin Sens. 1, H317	
25-50 %	4,4'-METHYLENEDIPHENYL DIISOCYANATE	CAS:101-68-8	Acute Tox. 4, H332; Skin Irrit. 2, H315; Eye Irrit. 2A, H319; STOT SE 3, H335; STOT RE 2, H373; Carc. 2, H351; Resp. Sens. 1, H334; Skin Sens. 1, H317	
5-10 %	METHYLENEDIPHENYL DIISOCYANATE (MDI)	CAS:26447-40-5	STOT RE 2, H373; Eye Irrit. 2A, H319; STOT SE 3, H335; Skin Irrit. 2, H315; Resp. Sens. 1, H334; Skin Sens. 1, H317; Acute Tox. 4, H332; Carc. 2, H351	
1-2.5 %	1,3-BIS(4-((4-ISOCYANATOPHENYL)METHYL) PHENYL)-1,3-DIAZETIDINE-2,4-DIONE	CAS:17589-24-1	Eye Irrit. 2A, H319; Skin Irrit. 2, H315; STOT SE 3, H335; Acute Tox. 4, H332; STOT RE 2, H373; Resp. Sens. 1, H334; Skin Sens. 1, H317	

4. FIRST AID MEASURES

Description of first aid measures

In case of skin contact:

Immediately take off all contaminated clothing.

OBTAIN IMMEDIATE MEDICAL ATTENTION.

Obtain medical attention if skin related symptoms persist.

Remove contaminated clothing immediately and dispose of safely.

After contact with skin, wash immediately with soap and plenty of water.

In case of eyes contact:

After contact with the eyes, rinse with water with the eyelids open for a sufficient length of time, then consult an opthalmologist immediately.

Protect uninjured eye.

In case of Ingestion:

Do not induce vomiting, get medical attention showing the SDS and the hazard label.

In case of Inhalation:

If breathing is irregular or stopped, administer artificial respiration.

In case of inhalation, consult a doctor immediately and show him packing or label.

Most important symptoms/effects, acute and delayed

Eye irritation

Eye damages

Skin Irritation

Erythema

Indication of any immediate medical attention and special treatment needed

In case of accident or unwellness, seek medical advice immediately (show directions for use or safety data sheet if possible).

Treatment:

(see paragraph 4.1)

5. FIRE-FIGHTING MEASURES

Extinguishing media

Suitable extinguishing media:

Water.

Carbon dioxide (CO2).

Unsuitable extinguishing media:

None in particular.

Specific hazards arising from the chemical

Do not inhale explosion and combustion gases.

Burning produces heavy smoke.

Hazardous combustion products: N.A.

Explosive properties: N.A.

Oxidizing properties: N.A.

Special protective equipment and precautions for fire-fighters

Use suitable breathing apparatus.

Collect contaminated fire extinguishing water separately. This must not be discharged into drains.

Move undamaged containers from immediate hazard area if it can be done safely.

6. ACCIDENTAL RELEASE MEASURES

Personal precautions, protective equipment and emergency procedures

Wear personal protection equipment.

Wear breathing apparatus if exposed to vapours/dusts/aerosols.

Provide adequate ventilation.

Use appropriate respiratory protection.

Do not allow to enter into soil/subsoil. Do not allow to enter into surface water or drains.

Limit leakages with earth or sand.

Methods and material for containment and cleaning up

Suitable material for taking up: absorbing material, organic, sand

Retain contaminated washing water and dispose it.

7. HANDLING AND STORAGE

Precautions for safe handling

Avoid contact with skin and eyes, inhalation of vapours and mists.

Do not use on extensive surface areas in premises where there are occupants.

Use localized ventilation system.

Don't use empty container before they have been cleaned.

Before making transfer operations, assure that there aren't any incompatible material residuals in the containers.

Contaminated clothing should be changed before entering eating areas.

Do not eat or drink while working.

See also section 8 for recommended protective equipment.

Conditions for safe storage, including any incompatibilities

Storage temperature: N.A.

Always keep in a well ventilated place.

Keep away from food, drink and feed.

Incompatible materials:

None in particular.

Instructions as regards storage premises:

Cool and adequately ventilated.

8. EXPOSURE CONTROLS/PERSONAL PROTECTION

Control parameters

List of components with OEL value

Component	OEL Type	Country	Ceiling	Long Term mg/m3	Long Term ppm	Short Term mg/m3	Short Term ppm	Behaviour	Note
POLYMETHYLENE POLYPHENYLENE ISOCYANATE	MAK	GERMANY		0,05					
4,4'-METHYLENEDIPHENYL DIISOCYANATE	ACGIH				0,005				respiratory sensitization (listed under Methylene bisphenyl isocyanate (MDI));
	OSHA		C			0,2	0,02		
	MAK	GERMANY		0,05					
	ACGIH				0,005				respiratory sensitization (listed under Methylene bisphenyl isocyanate (MDI))
	MAK	AUSTRIA		0,05	0,005	0,1	0,01		
METHYLENEDIPHENYL DIISOCYANATE (MDI)	OSHA		C			0,2	0,02		
	MAK	AUSTRIA				0,1	0,01		

Appropriate engineering controls: N.A.

Individual protection measures

Eye protection:

Use close fitting safety goggles, don't use eye lens.

Protection for skin:

Use clothing that provides comprehensive protection to the skin, e.g. cotton, rubber, PVC or viton.

Protection for hands:

Suitable materials for safety gloves; 29 CFR 1910.138 - ANSI/ISEA 105:

Polychloroprene - CR: thickness >=0,5mm; breakthrough time >=480min.

Nitrile rubber - NBR: thickness >=0,35mm; breakthrough time >=480min.

Butyl rubber - IIR: thickness >=0,5mm; breakthrough time >=480min.

Fluorinated rubber - FKM: thickness >=0,4mm; breakthrough time >=480min.

Use impervious gloves that provides comprehensive protection, e.g. P.V.C., neoprene or rubber.

Respiratory protection:

Respiratory protection must be used where exposure levels exceed workplace exposure limits. Refer to 29 CFR 1910.134 - CSA Z94.4 for information on selection and use of appropriate respiratory protection equipment.

Use adequate protective respiratory equipment.

9. PHYSICAL AND CHEMICAL PROPERTIES

Information on basic physical and chemical properties

Physical state: Liquid

Appearance and colour: Dark amber

Odour: faint aromatic

Odour threshold: No data available

pH: No data available

Melting point / freezing point: No data available

Initial boiling point and boiling range: 200 °C (392 °F)

Flash point: 220 °C (428 °F) Notes Open cup

Evaporation rate: No data available

Upper/lower flammability or explosive limits: No data available

Vapour density: No data available

Vapour pressure: 0.00 (kPa 50›C) mm Hg (20 degree celcius)

Relative density: 1.22 g/cm3

Solubility in water: reacts

Solubility in oil: No data available

Partition coefficient (n-octanol/water): No data available
Auto-ignition temperature: No data available
Decomposition temperature: No data available
Viscosity: No data available
Explosive properties: No data available
Oxidizing properties: No data available
Solid/gas flammability: No data available

Other information

Substance Groups relevant properties No data available
Miscibility: No data available
Fat Solubility: No data available
Conductivity: No data available

10. STABILITY AND REACTIVITY

Reactivity

Stable under normal conditions

Chemical stability

Data not available.

Possibility of hazardous reactions

None.

Conditions to avoid

Stable under normal conditions.

Incompatible materials

None in particular.

Hazardous decomposition products

None.

11. TOXICOLOGICAL INFORMATION

Information on toxicological effects

Toxicological information of the mixture:

There is no toxicological data available on the mixture. Consider the individual concentration of each component to assess toxicological effects resulting from exposure to the mixture.

Toxicological information on main components of the mixture:

POLYMETHYLENE POLYPHENYLENE ISOCYANATE	a) acute toxicity	LC50 Inhalation Rat = 490 mg/m3 4h
		LD50 Skin Rabbit > 9,4 g/kg
		LD50 Oral Rat = 49 g/kg
4,4'-METHYLENEDIPHENYL DIISOCYANATE	a) acute toxicity	LC50 Inhalation Rat = 369 mg/m3 4h
		LD50 Oral Rat = 31600 mg/kg
METHYLENEDIPHENYL DIISOCYANATE (MDI)	a) acute toxicity	LD50 Skin Rabbit > 6200 mg/kg
		LC50 Inhalation Rat = 369 mg/l 4h
		LD50 Oral Rat > 7400 mg/kg
		LD50 Skin Rabbit > 10000 mg/kg
		LC50 Inhalation Rat = 490 mg/m3 4h
		LD50 Oral Rat > 10000 mg/kg

If not differently specified, the information required in the regulation and listed below must be considered as N.A.

a) acute toxicity

b) skin corrosion/irritation

c) serious eye damage/irritation

d) respiratory or skin sensitisation

e) germ cell mutagenicity

f) carcinogenicity

g) reproductive toxicity

h) STOT-single exposure

Toxicological kinetics, metabolism and distribution information

i) STOT-repeated exposure

j) aspiration hazard

Substance(s) listed on the IARC Monographs:

POLYMETHYLENE POLYPHENYLENE ISOCYANATE	Group 3
4,4'-METHYLENEDIPHENYL DIISOCYANATE	Group 3
METHYLENEDIPHENYL DIISOCYANATE (MDI)	Group 3

Substance(s) listed as OSHA Carcinogen(s):

None

Substance(s) listed as NIOSH Carcinogen(s):

None

Substance(s) listed on the NTP report on Carcinogens:

None

12. ECOLOGICAL INFORMATION

Toxicity

Adopt good working practices, so that the product is not released into the environment.

Eco-Toxicological Information:

List of components with eco-toxicological properties

Component	Ident. Numb.	Ecotox Infos
METHYLENEDIPHENYL DIISOCYANATE (MDI)	CAS: 26447-40-5	d) Terrestrial toxicity : LC50 Worm Eisenia foetida > 1000 mg/kg 14d IUCLID
		d) Terrestrial toxicity : NOEC Worm Eisenia foetida >= 1000 mg/kg 14d IUCLID

Persistence and degradability

N.A.

Bioaccumulative potential

N.A.

Mobility in soil

N.A.

Other adverse effects

N.A.

13. DISPOSAL CONSIDERATIONS

Waste treatment methods

The generation of waste should be avoided or minimized wherever possible. Recover if possible.

Methods of disposal:

Disposal of this product, solutions, packaging and any by-products should at all times comply with the requirements of environmental protection and waste disposal legislation and any regional local authority requirements.

Dispose of surplus and nonrecyclable products via a licensed waste disposal contractor.

Do not dispose of waste into sewers.

Disposal considerations:

Do not allow to enter drains or watercourses.

Dispose of product according to all federal, state and local applicable regulations.

If this product is mixed with other wastes, the original waste product code may no longer apply and the appropriate code should be assigned.

Dispose of containers contaminated by the product in accordance with local or national legal provisions. For further information, contact your local waste authority.

Special precautions:

This material and its container must be disposed of in a safe way. Care should be taken when handling untreated empty containers.

Avoid dispersal of spilled material and runoff and contact with soil, waterways, drains and sewers.

Empty containers or liners may retain some product residues. Do not re-use empty containers.

14. TRANSPORT INFORMATION

Not classified as dangerous in the meaning of transport regulations.

UN number

ADR-UN number: N.A.

DOT-UN Number: N.A.

IATA-Un number: N.A.

IMDG-Un number: N.A.

UN proper shipping name

ADR-Shipping Name: N.A.

DOT-Proper Shipping Name: N.A.

IATA-Technical name: N.A.

IMDG-Technical name: N.A.

Transport hazard class(es)

ADR-Class: N.A.

DOT-Hazard Class: N.A.

IATA-Class: N.A.

IMDG-Class: N.A.

Packing group

ADR-Packing Group: N.A.

DOT-Packing group: N.A.

IATA-Packing group: N.A.

IMDG-Packing group: N.A.

Environmental hazards

Marine pollutant: No

Environmental Pollutant: N.A.

Transport in bulk according to Annex II of MARPOL73/78 and the IBC Code

N.A.

Special precautions

Department of Transportation (DOT):

N.A.

Road and Rail (ADR-RID) :

N.A.

Air (IATA) :

N.A.

Sea (IMDG) :

N.A.

15. REGULATORY INFORMATION

USA - Federal regulations

TSCA - Toxic Substances Control Act

TSCA inventory:

All the components are listed on the TSCA inventory

TSCA listed substances:

POLYMETHYLENE POLYPHENYLENE ISOCYANATE	is listed in TSCA	Section 8b
4,4'-METHYLENEDIPHENYL DIISOCYANATE	is listed in TSCA	Section 8b Section 8a - PAIR
METHYLENEDIPHENYL DIISOCYANATE (MDI)	is listed in TSCA	Section 8b Section 8a - PAIR
1,3-BIS(4-((4-ISOCYANATOPHENYL)METHYL)	is listed in TSCA	Section 8b

PHENYL)-1,3-DIAZETIDINE-2,4-
DIONE

SARA - Superfund Amendments and Reauthorization Act

Section 302 - Extremely Hazardous Substances:

No substances listed

Section 304 - Hazardous substances:

4,4'-METHYLENEDIPHENYL DIISOCYANATE

Section 313 - Toxic chemical list:

POLYMETHYLENE POLYPHENYLENE ISOCYANATE

4,4'-METHYLENEDIPHENYL DIISOCYANATE

CERCLA - Comprehensive Environmental Response, Compensation, and Liability Act

Substance(s) listed under CERCLA:

4,4'-METHYLENEDIPHENYL DIISOCYANATE Reportable quantity: 5000 pounds

CAA - Clean Air Act

CAA listed substances:

4,4'-METHYLENEDIPHENYL DIISOCYANATE is listed in CAA Section 112(b) - HAP Section 112(b) - HON

CWA - Clean Water Act

CWA listed substances:

No substances listed

USA - State specific regulations

California Proposition 65

Substance(s) listed under California Proposition 65:

No substances listed

Massachusetts Right to know

Substance(s) listed under Massachusetts Right to know:

4,4'-METHYLENEDIPHENYL DIISOCYANATE

METHYLENEDIPHENYL DIISOCYANATE (MDI)

Pennsylvania Right to know

Substance(s) listed under Pennsylvania Right to know:

4,4'-METHYLENEDIPHENYL DIISOCYANATE

New Jersey Right to know

Substance(s) listed under New Jersey Right to know:

POLYMETHYLENE POLYPHENYLENE ISOCYANATE

4,4'-METHYLENEDIPHENYL DIISOCYANATE

METHYLENEDIPHENYL DIISOCYANATE (MDI)

Canada - Federal regulations

DSL - Domestic Substances List

DSL Inventory:

All the substances are listed in the DSL.

NDSL - Non Domestic Substances List

NDSL Inventory:

No substances listed

NPRI - National Pollutant Release Inventory

Substances listed in NPRI:

No substances listed

16. OTHER INFORMATION

Safety Data Sheet dated: 6/16/2021 - version 6

Additional classification information

NFPA Health: 1 = Slight
NFPA Flammability: 1 = Combustible if heated
NFPA Reactivity: 0 = Minimal
NFPA Special Risk: N.A.

Reasonable care has been taken in the preparation of this information, but the manufacturer makes no warranty of merchantability or any other warranty, expressed or implied, with respect to this information. The manufacturer makes no representations and assumes no liability

for any direct, incidental or consequential damages resulting from its use. The information herein is presented in good faith and believed to be accurate as of the effective date given. It is the buyer's responsibility to ensure that its activities comply with Federal, State or provincial, and local laws.

This document was prepared by a competent person who has received appropriate training.

It is the duty of the user to ensure that this information is appropriate and complete with respect to the specific use intended.

This SDS cancels and replaces any preceding release.

Code	Description
H315	Causes skin irritation.
H317	May cause an allergic skin reaction.
H319	Causes serious eye irritation.
H320	Causes eye irritation.
H332	Harmful if inhaled.
H334	May cause allergy or asthma symptoms or breathing difficulties if inhaled.
H335	May cause respiratory irritation.
H351	Suspected of causing cancer.
H373	May cause damage to organs through prolonged or repeated exposure.
H373	May cause damage to organs through prolonged or repeated exposure if inhaled.

Legend to abbreviations and acronyms used in the safety data sheet:

ADR: European Agreement concerning the International Carriage of Dangerous Goods by Road.
RID: Regulation Concerning the International Transport of Dangerous Goods by Rail.
IMDG: International Maritime Code for Dangerous Goods.
IATA: International Air Transport Association.
IATA-DGR: Dangerous Goods Regulation by the "International Air Transport Association" (IATA).
ICAO: International Civil Aviation Organization.
ICAO-TI: Technical Instructions by the "International Civil Aviation Organization" (ICAO).
GHS: Globally Harmonized System of Classification and Labeling of Chemicals.
CLP: Classification, Labeling, Packaging.
EINECS: European Inventory of Existing Commercial Chemical Substances.
INCI: International Nomenclature of Cosmetic Ingredients.
CAS: Chemical Abstracts Service (division of the American Chemical Society).
GefStoffVO: Ordinance on Hazardous Substances, Germany.
LC50: Lethal concentration, for 50 percent of test population.
LD50: Lethal dose, for 50 percent of test population.
DNEL: Derived No Effect Level.
PNEC: Predicted No Effect Concentration.
TLV: Threshold Limiting Value.
TWATLV: Threshold Limit Value for the Time Weighted Average 8 hour day. (ACGIH Standard).
STEL: Short Term Exposure limit.
STOT: Specific Target Organ Toxicity.
WGK: German Water Hazard Class.
KSt: Explosion coefficient.

Paragraphs modified from the previous revision:

- 1. IDENTIFICATION OF THE SUBSTANCE/PREPARATION AND OF THE COMPANY/UNDERTAKING
- 2. HAZARDS IDENTIFICATION
- 8. EXPOSURE CONTROLS/PERSONAL PROTECTION
- 11. TOXICOLOGICAL INFORMATION
- 14. TRANSPORT INFORMATION

MATERIAL SAFETY DATA SHEET

Product: PRIMARY CARPET BACKINGS

1. Identification product and company

Product information
Commercial Name: Applicable to all PR (Primary) and EQ (Equalmatt)
Manufacturer Name: Mattex Fabrics
P.O. Box 112470 Dubai, United Arab Emirates
Information in case of emergency: Tel: +9714 3431155 Fax: +9714 3217174

2. Composition

Woven polypropylene film tapes

3. Hazard Identification

The material is made up of approximately 98% Polypropylene and 2% additives which does not contain dangerous substance as defined in EU directive 76/769/EEC (Reference to Carcinogenic Compound 1 & 2).

4. First Aid Measures

No special measures necessary.

5. Fire-Fighting advise

Suitable extinguishing media:
Dry extinguishing agent (dry powder)
Foam
Water spray jet

6. Handling & Storage

Safe Transportation and Handling Advise

Use Forklift with appropriate load capacity to carry the product based on its specified gross weight;
Use Forklift with appropriate mounting attachment, i.e. Boom type

Safe Storage Advise

Store product in a well ventilated area and temperature not more than 30° C.
Stock product not more than 4 piles.

7. Ecological & Disposal considerations

Materials are recyclable (refer to appropriate Polypropylene recycling process)
Where necessary, consult waste disposal agency.

This information is given without engagement, however, it is reliable and is based in our present state of knowledge. It should not be construed as guaranteeing specific properties of the products described or their suitability for a particular application. Existing acts and regulations must be observed by the recipient of our products under his own responsibility.

Information issued on: 1/14/2020 Any information issued previously is hereby cancelled.

MATTEX FABRICS

MATERIAL SAFETY DATA SHEET

Product: SECONDARY CARPET BACKINGS

1. Identification product and company

Product information
Commercial Name: Applicable to all SE (Secondary) and SP (Supermatt)
Manufacturer Name: Mattex Fabrics
P.O. Box 112470 Dubai, United Arab Emirates
Information in case of emergency: Tel: +9714 3431155 Fax: +9714 3217174

2. Composition

Woven polypropylene film tapes and texturized yarns.

3. Hazard Identification

The material is made up of approximately 98% Polypropylene and 2% additives which does not contain dangerous substance as defined in EU directive 76/769/EEC (Reference to Carcinogenic Compound 1 & 2).

4. First Aid Measures

No special measures necessary.

5. Fire-Fighting advise

Suitable extinguishing media:
Dry extinguishing agent (dry powder)
Foam
Water spray jet

6. Handling & Storage

Safe Transportation and Handling Advise

Use Forklift with appropriate load capacity to carry the product based on its specified gross weight;
Use Forklift with appropriate mounting attachment, i.e. Boom type

Safe Storage Advise

Store product in a well ventilated area and temperature not more than 30° C.
Stock product not more than 4 piles.

7. Ecological & Disposal considerations

Materials are recyclable (refer to appropriate Polypropylene recycling process)
Where necessary, consult waste disposal agency.

This information is given without engagement, however, it is reliable and is based in our present state of knowledge. It should not be construed as guaranteeing specific properties of the products described or their suitability for a particular application. Existing acts and regulations must be observed by the recipient of our products under his own responsibility.

Information issued on: 1/14/2020 Any information issued previously is hereby cancelled.

SAFETY DATA SHEET

According to EC directive 1907/2006, 456/2010, 830/2015

Version 4 . 20.07.2020

1. IDENTIFICATION OF THE SUBSTANCE/PREPARATION AND THE COMPANY/UNDERTAKING

English
Product information

Trade name:	Olive pits
CAS number:	Non applicable
EC number:	Non applicable
Registration number:	Exempted REACH registration
Company:	Olihueso S.L. Camino Viejo s/n 14913- Encinas Reales
Telephone:	+34 957 59 71 86 / +34 628 695 105
Emergency telephone number:	+34 915 620 420
E-mail:	olihueso@olihueso.es

2. COMPOSITION/INFORMATION ON INGREDIENTS

Chemical characterization:
Olive pits flour

Recommended use:
Various

3. HAZARDS IDENTIFICATION

Risk advice to man and the environment
Not applicable

Additional advice:
The product is non-dangerous in accordance with Directive 1999/45/EC and 127 2/2008/EC

4. FIRST AID MEASURES

General advice:
Remove from exposure, lie down. Take off contaminated clothing and shoes immediately. Never give anything by mouth to an unconscious person.

Eye contact:
Irrigate copiously with clean, fresh water for at least 10 minutes, holding the eyelids apart. Consult a physician.

Skin contact:
Wash off with soap and plenty of water. If symptoms persist, call a physician.

Inhalation:
Move to fresh air.

Ingestion:
Clean mouth with water and drink afterwards plenty of water. Do not induce vomiting. Consult a physician.

5. FIRE-FIGHTING MEASURES

Specific hazards during fire fighting:
carbon monoxide

Special protective equipment for fire-fighters:
Standard procedure for wood fires.

Suitable extinguishing media:
Use water spray, alcohol-resistant foam, dry chemical or carbon dioxide.

Extinguishing media which must not be used for safety reasons:
high volume water jet

Further information:
In the event of fire do not breathe smoke.

6. ACCIDENTAL RELEASE MEASURES

Personal precautions:
Use personal protective equipment. Avoid dust formation.

Environmental precautions:
Non enviromentally dangerous

Methods for cleaning up:
Use mechanical handling equipment.

Additional advice:
Significant slipping hazard from product leaks or spills.

7. HANDLING AND STORAGE

Handling

Safe handling advice:
Handle in accordance with good industrial hygiene and safety practice.

Advice on protection against fire and explosion:
Keep away from heat and sources of ignition.

Storage

Requirements for storage areas and containers:
Protect from humidity and water. Store in original container. Keep tightly closed.

8. EXPOSURE CONTROLS / PERSONAL PROTECTION

Additional technical information on the plant:
Keep away from heat and sources of ignition.

Personal protective equipment

Respiratory protection:
Dust mask recommended.

Hand protection:
protective gloves

Eye protection:
safety glasses

Hygiene measures:
In accordance with good industrial hygiene

Protective measures:
Keep away from food, drink and animal feeding stuffs.

9. PHYSICAL AND CHEMICAL PROPERTIES

Appearance

Form:	powder
Colour:	brown
Odour:	wood

Change in physical state

Melting point/range	not applicable
Boiling point/range:	not applicable
Flash point:	not applicable
Ignition temperature:	no data available
Autoignition temperature:	no data available
Upper explosion limit:	no data available
Lower explosion limit:	no data available
Vapour pressure:	not applicable
Bulk density:	650 to 750 kg/m3
Water solubility:	insoluble
pH:	not applicable
Viscosity:	not applicable

10. STABILITY AND REACTIVITY

Conditions to avoid

Keep away from heat and sources of ignition.

Materials to avoid

Not applicable

11. TOXICOLOGICAL INFORMATION

With the available data is not classified as toxic

12. ECOLOGICAL INFORMATION

Biodegradable

13. DISPOSAL CONSIDERATIONS

Product:
Following national regulation on organic waste disponsal.

Contaminated packaging:
Empty remaining contents. Following nationa regulation

14. TRANSPORT INFORMATION

Not classified as dangerous in the meaning of transport regulations.

15. REGULATORY INFORMATION

Further information:
EU regulation 2012/18

Water contaminating class (Germany):
: not hazardous to water

Other regulations:
The product does not need to be labelled in accordance with EC directives or respective national laws.

16. OTHER INFORMATION

The information provided is based on our current knowledge and experience and apply to the product as delivered. Regarding the product properties, these are not guaranteed. The delivery of this safety datasheet does not free the recipient of the product from his own responsibility to follow the relevant rules and regulations concerning this product.

MATERIAL SAFETY DATA SHEET

1. PRODUCT

Product Name: Artificial grass filaments
Product Type: Commercial Product
Recommended Use: can be used as a material of artificial turf
Company: JiangSu Vivaturf Co.,Limited
Telephone Number: (86)-0510-87378688
Fax number: (86)-0510-87378608

2. COMPOSITION/INFORMATION

Chemical name	Content	CAS number
polyethylene	≥90wt%	9002-88-4
Proprietary additives	≤10wt%	mixture

3. HAZARDS IDENTIFICATION

Skin Contact: not likely to cause skin irritation
Eye Contact: mechanically irritating to eyes
Health hazards: non-toxic, pyrolysis products of acid or aldehyde has some of stimulation to the eyes and upper respiratory
Environmental hazards: can not decompose in the soil
Explosion hazard: can be burned

4. FIRST AID MEASURES

Inhalation
If symptoms are experienced, remove to fresh air,obtain medical attention if breathing difficulty persists.
Skin contact
If molten material contacts the skin, immediately flush with large amounts of water to cool the affected tissues and polymer. Do not attempt to peel the product from the skin. Obtain immediately emergency medical attention if burn is deep or extensive .
Eye contact
Flush eyes thoroughly with water for several minutes and seek medical attention if discomfort persists.

5. FIRE-FIGHTING MEASURES

Flash ignition temperature: 270°C
Auto ignition temperature: 349 °C

Hazardous characteristics：
Thermal decomposition can release flammable gases
Hazardous combustion products：
carbon monoxide、carbon dioxide、ketones and aldehydes
Suitable Extinguishing Media：
Water spray、foam、dry powder、carbon dioxide、sand
Special Protective Equipment for Firefighters：
In the event of fire, wear self-contained breathing apparatus.
Additional information:
Heat value:46000kj/kg

6. ACCIDENTAL RELEASE MEASURES

Spill and leak procedure:
Sweep up spilled material for use or disposal. Good house keeping must be maintained to avoid potential slipping problem.
Caution:
Keep walking surface free of spilled material to avoid slipping hazard.

7. HANDLING AND STORAGE

Handling:
1) Provided good ventilation
2) Away from the fire、heat
3) Smoking is strictly prohibited in the workplace
4) Be careful when carrying,Keep from rain, do not put reversely and heavy

Storage:
1) Store in a cool、ventilated ware house,storage temperature should be below 60°C
2) Away from fire and heat
3) Oxidant should be kept separately

8. EXPOSURE CONTROLS/PERSONAL PROTECTION

Engineering Controls:
Use in a well-ventilated area. if handling results in dust generation, special ventilation may be needed to minimize dust exposure. If heated material generates vapour or fumes, use process enclosures, local exhaust ventilation or other engineering controls to control exposure.
Personal protective equipment:
Skin and body
Hot material:wear heat-resistant protective gloves.clothing and face shield able to withstand the temperature of the molten product. Cold material:none required,however,use of gloves is good industrial practice.
Hand

Hot material:wear heat-resistant protective gloves able to withstand the temperature of the molten product.Cold material:none required,however,use of gloves is good industrial practice.
The correct choice of protective gloves depends on the chemicals being handled, the conditions of work and use and the condition of the gloves.most gloves provide only short time of protection before they must be discarded and replaced.because specific work environments and material handling practices very, safety procedures should be developed for each intended application. Gloves should therefore be chosen in consultation with the supplier and with a full assessment of the working conditions.

Eyes

Safety glasses with side shield. Use dust goggles if high dust concentration is generated.

9. PHYSICAL AND CHEMICAL PROPERTIES

General information	
Form	Straight yarn M shape
Colour	Emerald Green&Olive Green
Dtex	12000/6F
Melting point	120-125 ^{o}C
Flash point	>270 ^{o}C
Ignition temperature	>349 ^{o}C
Decomposition temperature	>300°C
Danger of explosion	Product is not explosive
density	0.92-0.94g/cm^{3}
Solubility in/miscibility with water	Insoluble
Additional information	Soluble in boiling aromatic chlorinated solvents

10. STABILITY AND REACTIVITY

Chemical stability

This product is stable under normal use conditions for shock、vibration、pressure or temperature.

Chemical stability-condition to avoid

Avoid strong oxidizing agents; avoid processing material over 100°C.

Hazardous polymerisation

Not likely to occur

Corrosivity

Product is not corrosive

Dangerous products of decomposition

No hazardous decomposition products known at room temperature.

At elevated temperature the material will begin to decompose producing fumes that can contain carbon monoxide、carbon dioxide、Ketones and Aldehydes.

11. TOXICOLOGICAL INFORMATION

Acute toxicity

Primary irritant effect:

-on the skin: No irritant effect

-on the eye: No irritant effect

-Sensitization: No sensitizing effect known

Teratogenicity: No teratogenicity

Carcinogenicity: No carcinogenicity

Additional toxicological information

When used and handled according to specifications, the product does not have any harmful effects according to our experience and the information provided to us.

12. ECOLOGICAL INFORMATION

Ecotoxicological toxicity

The product is not toxic, small particles can have physical effects on water and soil organisms.

Biodegradation

The product is not biodegradable.

13. DISPOSAL CONSIDERATIONS

Product:

Recommendation

1) Recycle(reprocess)
2) Disposal through controlled incineration or authorised waste dump in accordance with local、state or federal regulations.

Uncleaned packaging:

Recommendation

Disposal must be done according to official regulations.

14. TRANSPORT INFORMATION

Transportation Note:

1) Shipment to complete the packing, loading should be conservative.
2) In the process of transportation to ensure that the packaging does not collapse, do not fall, not damaged.
3) With no oxidant mixed mixed transport.
4) Transportation should prevent insolation, rain, high temperature resistant.

15. REGULATORY INFORMATION

National chemical safety regulations:

1) Chemical Dangerous Goods Safety Management Regulations (February 17, 1987 the State Council)
2) hazardous materials safety regulations implementation details (of labor [1992] N o. 677)
3) the workplace safe use of chemicals ([1996] Ministry of Labor No. 423)
4) The polypropylene plant air health standards (GB 16209-1996), workshop provid ed the substance in the air and the maximum allowable concentration detection m ethods.

MATTEX FABRICS

MATERIAL SAFETY DATA SHEET

Product: PRIMARY CARPET BACKINGS

1. Identification product and company

Product information
Commercial Name: Applicable to all PR (Primary) and LQ (Equalmatt)
Manufacturer Name: Mattex Fabrics
P.O. Box 112470 Dubai, United Arab Emirates
Information in case of emergency: Tel: +9714 3431155 Fax: +9714 3217174

2. Composition

Woven polypropylene film tapes

3. Hazard Identification

The material is made up of approximately 98% Polypropylene and 2% additives which does not contain dangerous substance as defined in EU directive 76/769/EEC (Reference to Carcinogenic Compound 1 & 2).

4. First Aid Measures

No special measures necessary.

5. Fire-Fighting advise

Suitable extinguishing media:
Dry extinguishing agent (dry powder)
Foam
Water spray jet

6. Handling & Storage

Safe Transportation and Handling Advise

Use Forklift with appropriate load capacity to carry the product based on its specified gross weight;
Use Forklift with appropriate mounting attachment, i.e. Boom type

Safe Storage Advise

Store product in a well ventilated area and temperature not more than 30° C.
Stock product not more than 4 piles.

7. Ecological & Disposal considerations

Materials are recyclable (refer to appropriate Polypropylene recycling process)
Where necessary, consult waste disposal agency.

This information is given without engagement, however, it is reliable and is based in our present state of knowledge. It should not be construed as guaranteeing specific properties of the products described or their suitability for a particular application. Existing acts and regulations must be observed by the recipient of our products under his own responsibility.

Information issued on: 4/21/2008 Any information issued previously is hereby cancelled.

SAFETY DATA SHEET

BEYNON
A Tarkett Sports Company

SECTION 1 PRODUCT & COMPANY IDENTIFICATION

BEYNON Sports Surfaces, Inc. 16 Alt Road Hunt Valley, MD 21030 Phone: (410) 771-9473	**TRANSPORTATION EMERGENCY** CALL CHEMTREC (24 hr): (800) 424-9300 DISTRICT OF COLUMBIA: (202) 483-7616

PRODUCT NAME: FT PU – CURED POLYURETHANE (Using FT PU & UNIVERSAL B)
CHEMICAL FAMILY: Cured Crosslinked Polyurethane
CHEMICAL NAME: Crosslinked Polyurethane
SYNONYMS: None
RECOMMENDED USE: To be used in turf systems

SECTION 2 HAZARD(S) IDENTIFICATION

GHS CLASSSIFICATION:	None required in SOLID form.
HAZARD STATEMENT:	NO SIGNAL WORD OR SYMBOL REQUIRED.

PRECAUTIONS:
Wear protective gloves, protective clothing and eye protection, and face protection. Obtain special instructions before use. Wash with plenty of water and soap thoroughly after handling. Do not handle until all safety precautions have been read and understood. Do not eat, drink, or smoke when using this product. Do not breathe dust. If exposed or concerned, get medical advice/attention. Dispose of contents/container in accordance with local, regional, national, and international regulations.

**Product is in a Solid Form and only poses a respirable hazard (below) when in a dust form.* Inhalation is NOT an expected route of exposure.

*Carcinogenicity:	Category 1A	May cause cancer (If Respirable).	DANGER!

PPE: For spraying only or when exposures limits are exceeded.

SECTION 3 COMPOSITION / INFORMATION ON INGREDIENTS

HAZARDOUS INGREDIENTS

INGREDIENT	CAS NUMBER	EXPOSURE LIMITS	CONCENTRATION (%)
*Crystalline Silica, quartz (if Respirable)	14808-60-7	ACGIH TLV = .05 mg/m^3 OSHA PEL = 10/(%SiO_2+2) mg/m^3	< 0.3%
Cured Polyurethane Polymer			< 50%

SECTION 4 FIRST AID MEASURES

FIRST AID FOR EYES: Rinse cautiously with water for several minutes. Remove contact lenses, if present and easy to do. Continue rinsing. If eye irritation persists, get medical attention.

FIRST AID FOR SKIN: Remove contaminated clothing. Wash affected skin thoroughly with soap and water. Seek medical attention if irritation develops or persists.

FIRST AID FOR INHALATION: No vapors produced with usual handling as the polyurethane is an inert solid.

FIRST AID FOR INGESTION: No adverse effects anticipated by this route of exposure, incidental to proper handling. If swallowed, dilute with plenty of water. Do not induce vomiting unless directed to do so by medical personnel. Get medical attention. Do not give anything by mouth to an unconscious person.

SECTION 5 FIRE FIGHTING MEASURES

EXTINGUISHING EQUIPMENT and MEDIA: Use water, foam, CO_2 or dry chemical extinguishing media.

SPECIAL FIRE FIGHTING PROCEDURES:

Firefighters should be equipped with self-contained breathing apparatus to protect against potentially toxic and irritating fumes. Toxic and irritating gases/fumes may be given off during burning or thermal decomposition.

SECTION 6 ACCIDENTAL RELEASE MEASURES

MAJOR SPILL CONTACT: Beynon Sports Surfaces at (410) 771-9473

TRANSPORTATION SPILL: CHEMTREC at (800) 424-9300.

SPILL OR LEAK CLEAN UP PROCEDURES:

Pick up and handle as any other solid material.

SECTION 7 HANDLING & STORAGE

STORAGE TEMPERATURE: Not Applicable

SHELF LIFE: 10 years

SPECIAL SENSITIVITY: None

HANDLING/STORAGE PRECAUTIONS: Polyurethane solid with proper handling at ambient temperature requires no special measures. It is recommended that the material is stored away from sources that would cause the polyurethane solid to burn. Store away from oxidizing agents, acids and alkalis. When cutting or grinding polyurethane, dust will likely be produced so appropriate PPE (See Section 8 of SDS) is recommended.

SECTION 8 EXPOSURE CONTROLS / PERSONAL PROTECTION

EXPOSURE LIMITS: Not applicable in solid form.

ENGINEERING CONTROLS: Polyurethane solid does not require specific engineering controls. If cutting or grinding the material, use dust control measures and ensure adequate ventilation.

RESPIRATORY PROTECTION: Not required under normal conditions of use. For grinding operations, wear a dust respirator. If generating gas, vapor, and fumes from thermal processing operations, wear a NIOSH approved air-purifying respirator with organic cartridges or supplied-air respirator if ventilation is inadequate.

EYE PROTECTION:	Not required under normal conditions of use. Safety glasses may be used to avoid dust if desired.
SKIN PROTECTION:	None required in normal use. To prevent skin contact, wear gloves, coveralls, apron as desired.
OTHER:	Follow good normal hygiene practices. Wash hands thoroughly after handling. Do not eat, drink, or smoke when using this product.

SECTION 9 PHYSICAL AND CHEMICAL PROPERTIES

Appearance (physical state, color, etc.):	Solid, Grey	Initial boiling point and boiling range:	Not applicable
Upper/lower flammability or explosive limits:	Not applicable	Flash point:	Not applicable
Odor:	Mild rubber smell	Evaporation rate:	Not applicable
Odor threshold:	Not applicable	Flammability (solid, gas):	Non-flammable
Vapor density:	Not applicable	Vapor pressure:	Not applicable
pH:	Not applicable	Partition coefficient: n-octanol/water:	Not applicable
Relative density (specific gravity):	1.4-1.6	Auto-ignition temperature:	Not applicable
Melting point/freezing point:	Melts 380° to 450° F	Decomposition temperature:	Not applicable
Solubility(ies):	Insoluble	Viscosity:	Not applicable

SECTION 10 STABILITY AND REACTIVITY

REACTIVITY: Avoid contact with strong acids and alkali.

CHEMICAL STABILITY: Stable (solid).

OTHER: Hazardous polymerization will not occur. Decomposition through burning may potentially produce hazardous decomposition products.

SECTION 11 TOXICOLOGICAL INFORMATION

TOXICITY: None based on available data for the components.

Listed in the National Toxicology Program (NTP) Report on Carcinogens (latest edition) **No**

SECTION 12 ECOLOGICAL INFORMATION

Based on available data for the components.

This product is not expected to cause significant effects in the aquatic environment.

SECTION 13 DISPOSAL CONSIDERATIONS

WASTE DISPOSAL METHOD:

Incinerate, treat or dispose in landfill in accordance with Federal, State, and local regulations. Recycle if possible. The polyurethane solid and any dust or particles, produced from cutting, are inert and can be placed in landfill.

EMPTY CONTAINER PRECAUTIONS:

Dispose in accordance with Federal, State, and local regulations.

SECTION 14 TRANSPORT INFORMATION

TRANSPORTATION EMERGENCIES:

Contact should be made with **Beynon Sport at (410) 771-9473** or if for some reason there is no response, contact **CHEMTREC (800-424-9300)** when this product is unintentionally released from its container during its course of distribution, regardless of the amount released. Distribution includes transportation, storage incidental to transportation, loading and unloading. Such notification must be immediate and made by the person having knowledge of the release.

DOT (DOMESTIC SURFACE):	Non-Regulated.
IMO / IMDG CODE (OCEAN):	Non-Regulated.
ICAO / IATA (AIR):	Non-Regulated.

SECTION 15 REGULATORY INFORMATION

OSHA Hazcom Standard Rating:	Non-Hazardous
US. Toxic Substances Control Act:	Not Applicable
US. EPA CERCLA Hazardous Substances (40 CFR 302):	None
SARA Section 311/312 Hazard Categories:	Yes, if in Dust Form. Immediate/Delayed Hazard
US. EPA Emergency Planning and Community Right-To-Know Act (EPCRA) SARA Title III Section 302 Extremely Hazardous Substance (40 CFR 355, Appendix A):	None
US. EPA Emergency Planning and Community Right-To-Know Act (EPCRA) SARA Title III Section 313 Toxic Chemicals (40 CFR 372.65) - Supplier Notification Required:	None
US. EPA Resource Conservation and Recovery Act (RCRA) Composite List of Hazardous Wastes and Appendix VIII Hazardous Constituents (40 CFR 261)	Under RCRA, it is the responsibility of the person who generates a solid waste, as defined in 40 CFR 261.2, to determine if that waste is a hazardous waste.

SECTION 16 OTHER INFORMATION

Contact:	Product Safety, BEYNON Sports Surfaces, Inc.
Telephone:	(410) 771-9473
Origination Date:	12/4/2018
Revision Date:	
Revision No.:	0

Information on this form is offered in good faith as typical values and not as a product specification. No warranty, either express or implied is hereby made. The recommended industrial hygiene and safe handling procedures are believed to be generally applicable. However, each user should review these recommendations in the specific context of the intended use and determine whether they are appropriate.

SAFETY DATA SHEET

This SDS addresses Polyform® expanded polypropylene (EPP) products, made from expandable polypropylene raw material White

1. PRODUCT AND COMPANY IDENTIFICATION

1.1	**Product Identification:**	Expanded Polypropylene (EPP) Foam
1.2	**Manufacturer:**	Polyform Cellular Plastics Inc
	(Corporate Office)	454 Edouard Street Granby, Quebec, J2G 3Z3
1.3	**Emergency Phone Number:**	+1 (450) 378-9093 (8:00 AM to 5:00 PM ET)

2. HAZARDS IDENTIFICATION

2.1	**GHS Classification:**	Non-hazardous as per GHS
2.2	**GHS Label Elements:**	None
2.3	**Signal Word:**	Not hazardous
2.4	**Risk Phrases:**	None
2.5	**Hazardous Components:**	None
2.6	**Precautionary Statements:**	Not harmful to health or environment under normal use of product. If material is heated up, may cause burns.

3. COMPOSITION / INFORMATION ON INGREDIENTS

3.1 **Composition:** Compositions given are typical values, and are not to be construed as specifications

3.2 **Components: Hazardous component(s):** none

CAS Number	Content (W/W)	Chemical Name
9010-79-1	95.0-99.9%	Polypropylene Copolymer

4. FIRST AID MEASURES

4.1	**Eyes:**	Rinse the eyes in order to remove particles of this product
4.2	**Skin:**	Not expected to present a significant skin hazard under anticipated conditions of normal use.
4.3	**Ingestion:**	Not applicable under normal conditions of use
4.4	**Inhalation:**	Not expected to present a significant inhalation hazard

5. FIRE FIGHTING MEASURES

5.1 Suitable extinguishing media:

Water (preferably spray)
CO_2
Foam, or dry chemical

5.2 Specific Protective Equipment and Precautions for Fire-Fighters :

In case of close firefighting, use breathing apparatus

5.3 Hazardous Combustion products:

Combustible material
Heat sensitive: may melt
Molten material forms flaming drops after igniting
Incomplete thermal decomposition or burning may releases hazardous products and/or flammable vapors (like ethylene, ethane, carbon monoxide, propane, etc)

6. ACCIDENTAL RELEASE MEASURES

6.1 Personal Precautions, Protective Equipment and Emergency Procedures:

Use personal protection as defined in Section 8

6.2 Environmental Precautions:

Quickly sweep up product. Handle and store according to measures as defined in Section 7

6.3 Methods and Materials for Containment and Cleaning up:

Collect product in an appropriate way and avoid dust formation. Place in suitable labeled container for appropriate disposal (see Section 13)

7. HANDLING AND STORAGE

7.1 Precautions for safe handling:

In order to avoid static discharge equipment should be made of conducting material and should be grounded

7.2 Conditions for safe storage:

Keep away from heat or ignition sources (flame or sparks).

8. EXPOSURE CONTROLS / PERSONAL PROTECTION

8.1 Occupational Exposure: EU: VME = 10 mg/m^3 (8 hours basis – Decree 84-1093)
USA: TLV (ACGIH) 1997-98: TWA = 10 mg/m^3

8.2 Collective Protection: Good general ventilation should be provided.

8.3 Personal Protection: Eye protection should be worn for all industrial's operations.

8.4 Skin Protection: Under anticipated conditions of normal use: not normally considered as skin hazard. Use suitable protection gloves and clothes against contact with molten product.

8.5 Industrial hygiene: Use good personal hygiene practices.

9. PHYSICAL AND CHEMICAL PROPERTIES

Appearance:	Cellular foam blocks, boards and shapes
Physical State at 25°C:	Solid
Color:	Black or White (depending on grade/type)
Odor:	Odorless
Density at 25°C (g/l or kg/m^3)	10 to 225
Solubility in water (% weight)	Insoluble
Other Solvents	Slightly soluble in hot organic solvents
Melting point temperature (°C)	130 to 170°C
Decomposition temperature (°C)	> 300 °C
Auto-ignition temperature (°C)	> 350 °C

10. STABILITY AND REACTIVITY

10.1 Chemical Stability: The product is stable in normal use conditions

10.2 Hazardous Decomposition Products: incomplete combustion will generate carbon monoxide and possible other toxic vapors

11. TOXICOLOGICAL INFORMATION

Refer to section 3

11.1 Acute Toxicity: LD50 not available

11.2 Inhalation: Dust can irritate the upper respiratory tract.

11.3 Skin Contact: Although no appropriate human or animal health effects data are known to exist, this material is not expected to be a skin irritant

11.4 Eye contact: Can induce irritation or injury of the cornea due to a mechanical action.

11.5 Ingestion: May cause choking if ingested.

11.6 Chronic Toxicity: No chronic health effects for this material have been reported.

12. ECOLOGICAL INFORMATION

Product is biologically inert and not readily degradable.

13. DISPOSAL CONSIDERATIONS

Dispose of product in according to local and national regulations on waste disposal.
User is encouraged to recycle or reuse material

14. TRANSPORT INFORMATION

Not regulated under Canadian TDG Regulations. Not regulated under US DOT Regulations.

UN No.	Not classified
ADR/RID	Not classified
ADR/VLG	Not classified
ADNR	Not classified
IMO-IMG code	Not classified
ICAO/IATA	Not classified

15. REGULATORY INFORMATION

EEC Labeling
Symbol(s): None
R Phrase(s): None
S Phrase(s): None

The contents and format of this MSDS are in accordance with US OSHA requirements and EEC Commission directives 67/548/EEC, 91/155/EEC (and its modifications 2001/58/EC), 1999/45/EC and their adaptations to technical progress.

All ingredients and components for this product are on the Domestic Substances List (DSL).

The product is classified as WHMIS as non-hazardous.

This product has been classified according to the GHS hazard criteria and the SDS contains all the information required by the GHS.

16. REGULATORY INFORMATION

SDS prepared by: **Polyform Cellular Plastics Inc.**
454 Edouard Street
Granby, Quebec, J2G 3Z3
Canada

Preparation Date: April 14, 2021
Updated: April 14, 2021

Other Information:

The information contained herein is provided as a general reference only. Polyform believes the data set forth herein to be accurate and given in good faith. Polyform makes no guarantee or warranty and does not assume any liability with respect to the accuracy or completion of such information or of the product results in any specific instance, and hereby expressly disclaims any implied warranties of merchantability of fitness for a particular purpose, or any other warranties or representations, whatsoever, expressed or implied.

SAFETY DATA SHEET

This SDS addresses Polyform® expanded polypropylene (EPP) products, made from expandable polypropylene raw material White

1. PRODUCT AND COMPANY IDENTIFICATION

1.1	**Product Identification:**	Expanded Polypropylene (EPP) Foam
1.2	**Manufacturer:**	Polyform Cellular Plastics Inc
	(Corporate Office)	454 Edouard Street Granby, Quebec, J2G 3Z3
1.3	**Emergency Phone Number:**	+1 (450) 378-9093 (8:00 AM to 5:00 PM ET)

2. HAZARDS IDENTIFICATION

2.1	**GHS Classification:**	Non-hazardous as per GHS
2.2	**GHS Label Elements:**	None
2.3	**Signal Word:**	Not hazardous
2.4	**Risk Phrases:**	None
2.5	**Hazardous Components:**	None
2.6	**Precautionary Statements:**	Not harmful to health or environment under normal use of product. If material is heated up, may cause burns.

3. COMPOSITION / INFORMATION ON INGREDIENTS

3.1 **Composition:** Compositions given are typical values, and are not to be construed as specifications

3.2 **Components: Hazardous component(s):** none

CAS Number	Content (W/W)	Chemical Name
9010-79-1	95.0-99.9%	Polypropylene Copolymer

4. FIRST AID MEASURES

4.1	**Eyes:**	Rinse the eyes in order to remove particles of this product
4.2	**Skin:**	Not expected to present a significant skin hazard under anticipated conditions of normal use.
4.3	**Ingestion:**	Not applicable under normal conditions of use
4.4	**Inhalation:**	Not expected to present a significant inhalation hazard

5. FIRE FIGHTING MEASURES

5.1 Suitable extinguishing media:

Water (preferably spray)
CO_2
Foam, or dry chemical

5.2 Specific Protective Equipment and Precautions for Fire-Fighters :

In case of close firefighting, use breathing apparatus

5.3 Hazardous Combustion products:

Combustible material
Heat sensitive: may melt
Molten material forms flaming drops after igniting
Incomplete thermal decomposition or burning may releases hazardous products and/or flammable vapors (like ethylene, ethane, carbon monoxide, propane, etc)

6. ACCIDENTAL RELEASE MEASURES

6.1 Personal Precautions, Protective Equipment and Emergency Procedures:

Use personal protection as defined in Section 8

6.2 Environmental Precautions:

Quickly sweep up product. Handle and store according to measures as defined in Section 7

6.3 Methods and Materials for Containment and Cleaning up:

Collect product in an appropriate way and avoid dust formation. Place in suitable labeled container for appropriate disposal (see Section 13)

7. HANDLING AND STORAGE

7.1 Precautions for safe handling:

In order to avoid static discharge equipment should be made of conducting material and should be grounded

7.2 Conditions for safe storage:

Keep away from heat or ignition sources (flame or sparks).

8. EXPOSURE CONTROLS / PERSONAL PROTECTION

8.1 Occupational Exposure: EU: VME = 10 mg/m^3 (8 hours basis – Decree 84-1093)
USA: TLV (ACGIH) 1997-98: TWA = 10 mg/m^3

8.2 Collective Protection: Good general ventilation should be provided.

8.3 Personal Protection: Eye protection should be worn for all industrial's operations.

8.4 Skin Protection: Under anticipated conditions of normal use: not normally considered as skin hazard. Use suitable protection gloves and clothes against contact with molten product.

8.5 Industrial hygiene: Use good personal hygiene practices.

9. PHYSICAL AND CHEMICAL PROPERTIES

Appearance:	Cellular foam blocks, boards and shapes
Physical State at 25°C:	Solid
Color:	Black or White (depending on grade/type)
Odor:	Odorless
Density at 25°C (g/l or kg/m^3)	10 to 225
Solubility in water (% weight)	Insoluble
Other Solvents	Slightly soluble in hot organic solvents
Melting point temperature (°C)	130 to 170°C
Decomposition temperature (°C)	> 300 °C
Auto-ignition temperature (°C)	> 350 °C

10. STABILITY AND REACTIVITY

10.1 Chemical Stability: The product is stable in normal use conditions

10.2 Hazardous Decomposition Products: incomplete combustion will generate carbon monoxide and possible other toxic vapors

11. TOXICOLOGICAL INFORMATION

Refer to section 3

11.1 Acute Toxicity: LD50 not available

11.2 Inhalation: Dust can irritate the upper respiratory tract.

11.3 Skin Contact: Although no appropriate human or animal health effects data are known to exist, this material is not expected to be a skin irritant

11.4 Eye contact: Can induce irritation or injury of the cornea due to a mechanical action.

11.5 Ingestion: May cause choking if ingested.

11.6 Chronic Toxicity: No chronic health effects for this material have been reported.

12. ECOLOGICAL INFORMATION

Product is biologically inert and not readily degradable.

13. DISPOSAL CONSIDERATIONS

Dispose of product in according to local and national regulations on waste disposal.
User is encouraged to recycle or reuse material

14. TRANSPORT INFORMATION

Not regulated under Canadian TDG Regulations. Not regulated under US DOT Regulations.

UN No.	Not classified
ADR/RID	Not classified
ADR/VLG	Not classified
ADNR	Not classified
IMO-IMG code	Not classified
ICAO/IATA	Not classified

15. REGULATORY INFORMATION

EEC Labeling
Symbol(s): None
R Phrase(s): None
S Phrase(s): None

The contents and format of this MSDS are in accordance with US OSHA requirements and EEC Commission directives 67/548/EEC, 91/155/EEC (and its modifications 2001/58/EC), 1999/45/EC and their adaptations to technical progress.

All ingredients and components for this product are on the Domestic Substances List (DSL).

The product is classified as WHMIS as non-hazardous.

This product has been classified according to the GHS hazard criteria and the SDS contains all the information required by the GHS.

16. REGULATORY INFORMATION

SDS prepared by: **Polyform Cellular Plastics Inc.**
454 Edouard Street
Granby, Quebec, J2G 3Z3
Canada

Preparation Date: April 14, 2021
Updated: April 14, 2021

Other Information:

The information contained herein is provided as a general reference only. Polyform believes the data set forth herein to be accurate and given in good faith. Polyform makes no guarantee or warranty and does not assume any liability with respect to the accuracy or completion of such information or of the product results in any specific instance, and hereby expressly disclaims any implied warranties of merchantability of fitness for a particular purpose, or any other warranties or representations, whatsoever, expressed or implied.

AMORIM
CORK
COMPOSITES

SAFETY DATA SHEET

1. IDENTIFICATION

Identification of substance or preparation: TrueBlend

Uses of substance or preparation: Artificial turf infill

Manufacturer/Supplier:

Amorim Cork Composites, SA
Rua de Meladas, 260
4536-902 Mozelos VFR
Portugal

Tel.: +351 22 747 53 00

Emergency contact: Contact your local emergency services.

2. HAZARD(S) IDENTIFICATION.

The product is not considered to have any hazards according to OSHA Hazard Communication Standard (29 CFR 1910.1200).

3. COMPOSITION / INFORMATION ON INGREDIENTS

Composite of cork granules and synthetic elastomers.

4. FIRST- AID MEASURES.

Not applicable.

5. FIRE FIGHTING MEASURES.

Suitable extinguishing media: Water, foam, dry powder or carbon dioxide (CO_2).

Unsuitable extinguishing media: Not applicable.

Specific Hazards: Risk of formation of toxic pyrolysis products.

Protective equipment for fire-fighters: In case of fire, wear a self-contained breathing apparatus.

Additional information: Fire residues must be disposed in accordance with local regulations.

6. ACCIDENTAL RELEASE MEASURES.

Individual precautions: Avoid ignition sources.
Environment precautions: No special precaution.
Cleaning methods: Not applicable.

7. HANDLING AND STORAGE.

Handling:	No special precaution.
Storage:	Store in-house at room temperature protected from sunlight.

8. EXPOSURE CONTROLS / PERSONAL PROTECTION.

Occupational exposure Limits:	None know or established. However TLV-TWA for Total Dust - 10mg/m3
Professional exposition control:	
a) Respiratory protection:	Ensure appropriate exhausted and ventilated working place. Without those conditions, wear dust breathing mask..
b) Hand protection:	None required, in normal conditions.
c) Eye protection:	Wear saftety glasses.
d) Skin protection:	None required, in normal conditions
Environment exposition control:	No special requirement

9. PHYSICAL AND CHEMICAL PROPERTIES.

Appearance:	Granules (solid)
Flamability limits:	N/D
Colour:	Dark brown
Vapor pressure	N/A
Odour:	Typical
Melting point:	N/A
Auto-ignition temperature:	N/D
Bulk density, Kg/m^3: (lb/ft^3)	450 (28)
Flash point:	N/D
Solubility in water:	Cork is Insoluble.

N/D – Not Determined; N/A – Not applicable

10 STABILITY AND REACTIVITY.

Reactivity: Material is stable in recommended use conditions.

Chemical stability: Stable with most media. Strong alkalis should be avoid (dissolve cork)

Other: The product is stable at processing temperatures.

11. TOXICOLOGICAL INFORMATION.

Acute toxicity None information of toxicity available.

Irritation: None known.

Sensitization: None known.

12. ECOLOGICAL INFORMATION.

Ecotoxicity: None known.

Persistence and degradation: None known.

13. DISPOSAL CONSIDERATION.

Residues: In accordance with federal, state and local regulations. Always consult the relevant local authority before disposal.

Elimination method Reuse and/or recycle. If not possible, landfill disposal or incineration.

Packaging: It can be reused.

14 TRANSPORT INFORMATION.

Road & Rail (ADR/RID): Not regulated.
Sea (IMDG/IMO): Not regulated.
Air (ICAO/IATA): Not regulated.

15. REGULATORY INFORMATION.

EC classification/Labelling: -
Dangerous preparation: Not classified as dangerous

16. OTHER INFORMATION.

The information given in this Material Safety Data Sheet is based on knowledge available at the time of compilation and is intended to describe the product only in terms of health and safety requirements. It does not signify any warranty with regard to specific properties or specifications.

BEYNON®
A Tarkett Sports Company

TECHNICAL DATA SHEET

BSS 1000

FULL POUR POLYURETHANE SYSTEM

The **BSS 1000** is a unique full pour, dual durometer polyurethane system designed by Beynon to provide optimal shock absorbency while also providing excellent return of energy. The system is comprised of an area elastic force reduction base layer utilizing Beypur 280 two component polyurethane intermixed with cryogenically ground SBR fine mesh rubber. The surface is finished with an energy returning wear layer which is applied by broadcasting EPDM rubber granules into a wet layer of Beypur 250 two-component polyurethane. The Beynon Hobart® coating system is applied to the finish texture to allow for added protection against long term wear and color stability.

	WORLD ATHLETICS REQUIREMENT	BSS 1000 TESTED
Thickness (Absolute)	–	**12.7 mm (min.)**
Force Reduction	35-50%	**40%**
Vertical Deformation	0.6-2.5 mm	**1.7 mm**
Friction (TRRL)	≥ 47	**51**
Tensile Strength	≥ 0.5 MPa	**0.79 MPa**
Elongation	≥ 40%	**46%**

ISO 9001:2015 CERTIFIED

The ISO 9001:2015 certification means that Beynon has demonstrated its ability to consistently provide polyurethane products that meet and exceed customer requirements and aim to enhance customer satisfaction through the effective application of an ISO9001:2015 Quality Management System.

WORLD ATHLETICS CERTIFIED PRODUCT

CERTIFICATE # S-03-0034

BEYNON®
A Tarkett Sports Company

TECHNICAL DATA SHEET

BSS-1000ML

FULL POUR MULTI-LAYER POLYURETHANE SYSTEM (EMBEDDED)

BSS-1000ML is a multi-layer full pour polyurethane system comprising of three layers. The first layer is applied by broadcasting SBR granules to excess into two-component polyurethane. The excess SBR granules are reclaimed after the polyurethane material has cured. The second layer is applied by broadcasting SBR granules to excess into a specially formulated force reduction two-component polyurethane. The excess SBR granules are once again reclaimed after the polyurethane material has cured. The third and final layer consists of an energy returning wear layer which is applied by broadcasting EPDM rubber granules to excess into two-component polyurethane. The excess EPDM granules are reclaimed after the polyurethane material has cured.

	WORLD ATHLETICS REQUIREMENT	BSS-1000ML TESTED
Thickness (Absolute)	–	**13.7 mm**
Force Reduction	35-50%	**36%**
Vertical Deformation	0.6-2.5 mm	**1.7 mm**
Friction (TRRL)	≥ 47	**52**
Tensile Strength	≥ 0.5 MPa	**0.52 MPa**
Elongation	≥ 40%	**48%**

ISO 9001:2015 CERTIFIED

The ISO 9001:2015 certification means that Beynon has demonstrated its ability to consistently provide polyurethane products that meet and exceed customer requirements and aim to enhance customer satisfaction through the effective application of an ISO9001:2015 Quality Management System.

WORLD ATHLETICS CERTIFIED PRODUCT

CERTIFICATE # S-12-0138

TECHNICAL DATA SHEET

BSS-100

Base Mat Structural Spray System

BSS-100 is a water permeable system, meaning water will penetrate through the surface and drain into the subbase, and is mechanically bonded to the asphalt or concrete substrate. Construction of the BSS-100 starts with a paved-in-place Force Reduction base layer consisting of a high performance polyurethane binder intermixed with SBR rubber granules. The surface is finished with multiple spray applications of our high solids, pigmented polyurethane structural spray mixed with Virgin EPDM rubber granules.

PERFORMANCE PROPERTIES

	IAAF Requirement	BSS-100 Tested
Thickness	—-	**13.2 mm**
Force Reduction	35-50%	**42%**
Vertical Deformation	0.6-2.5 mm	**2.4 mm**
Friction (TRRL)	≥ 47	**55**
Tensile Strength	≥ 0.4 MPa	**0.40 MPa**
Elongation	≥ 40%	**75%**

BSS® 100 is an IAAF certified product. Certificate # S-04-0044

ISO 9001-2015 CERTIFIED

The ISO 9001:2015 certification means that Beynon has demonstrated its ability to consistently provide polyurethane products that meet and exceed customer requirements and aim to enhance customer satisfaction through the effective application of an ISO9001:2015 Quality Management System.

BEYNON® A Tarkett Sports Company | THE ULTIMATE SURFACE EXPERIENCE

16 Alt Road Hunt Valley, Maryland 21030
(888) 240-3670 | www.beynonsports.com

TECHNICAL DATA SHEET

BSS-200

Impermeable Base Mat Structural Spray System

BSS-200 is designed as an impermeable system. Construction of the BSS-200 starts with a paved-in-place Force Reduction base layer consisting of a high performance polyurethane binder intermixed with SBR rubber granules. The basemat layer is then treated with a thixotropic two-component polyurethane sealer making the surface impervious to water penetration. The surface is finished with multiple spray applications of a UV stable, pigmented polyurethane structural spray mixed with Virgin EPDM rubber granules.

PERFORMANCE PROPERTIES

	IAAF Requirement	BSS-200 Tested
Thickness	—-	**13.0 mm**
Force Reduction	35-50%	**38 %**
Vertical Deformation	0.6-2.5 mm	**1.8 mm**
Friction (TRRL)	≥ 47	**51**
Tensile Strength	≥ 0.5 MPa	**0.56 MPa**
Elongation	≥ 40%	**49 %**

BSS® 200 is an IAAF certified product. Certificate # S-10-0108

ISO 9001-2015 CERTIFIED

The ISO 9001:2015 certification means that Beynon has demonstrated its ability to consistently provide polyurethane products that meet and exceed customer requirements and aim to enhance customer satisfaction through the effective application of an ISO9001:2015 Quality Management System.

BEYNON® A Tarkett Sports Company | THE ULTIMATE SURFACE EXPERIENCE

16 Alt Road Hunt Valley, Maryland 21030
(888) 240-3670 | www.beynonsports.com

BSS-300

Sandwich System (Embedded)

TECHNICAL DATA SHEET

BSS-300 is a two-layer system comprised of a base layer matrix of SBR rubber granules intermixed with Beypur 300, a single component, moisture cured polyurethane applied approximately 10mm in thickness. The paved-in-place base layer is sealed with Beypur 200, a two-component, pigmented thixotropic polyurethane applied via metal or rubber squeegee to ensure all pores of the base mat are sealed. The wear layer, installed at 3-4mm is applied by broadcasting EPDM rubber granules into a wet layer of Beypur 250 two-component polyurethane.

PERFORMANCE PROPERTIES

	IAAF Requirement	BSS-300 Tested
Thickness	—-	**12.5 mm**
Force Reduction	35-50%	**39 %**
Vertical Deformation	0.6-2.5 mm	**2.2 mm**
Friction (TRRL)	≥ 47	**70**
Tensile Strength	≥ 0.5 MPa	**0.50 MPa**
Elongation	≥ 40%	**60 %**

BSS® 300 is an IAAF certified product. Certificate # S-04-0046

ISO 9001-2015 CERTIFIED

The ISO 9001:2015 certification means that Beynon has demonstrated its ability to consistently provide polyurethane products that meet and exceed customer requirements and aim to enhance customer satisfaction through the effective application of an ISO9001:2015 Quality Management System.

BEYNON® A Tarkett Sports Company | THE ULTIMATE SURFACE EXPERIENCE

16 Alt Road Hunt Valley, Maryland 21030
(888) 240-3670 | www.beynonsports.com